STEEL CONSTRUCTION

MANUAL

AMERICAN INSTITUTE
OF
STEEL CONSTRUCTION

FOURTEENTH EDITION

1 Dimensions and Properties

2 General Design Considerations

3 Design of Flexural Members

4 Design of Compression Members

5 Design of Tension Members

6 Design of Members Subject to Combined Forces

7 Design Considerations for Bolts

8 Design Considerations for Welds

9 Design of Connecting Elements

10 Design of Simple Shear Connections

11 Design of Partially Restrained Moment Connections

12 Design of Fully Restrained Moment Connections

13 Design of Bracing Connections and Truss Connections

14 Design of Beam Bearing Plates, Col. Base Plates, Anchor Rods, and Col. Splices

15 Design of Hanger Connections, Bracket Plates, and Crane-Rail Connections

16 Specifications and Codes

17 Miscellaneous Data and Mathematical Information

Index and General Nomenclature

AISC © 2011

by

American Institute of Steel Construction

ISBN 1-56424-060-6

All rights reserved. This book or any part thereof must not be reproduced in any form without the written permission of the publisher.
The AISC logo is a registered trademark of AISC.

The information presented in this publication has been prepared in accordance with recognized engineering principles and is for general information only. While it is believed to be accurate, this information should not be used or relied upon for any specific application without competent professional examination and verification of its accuracy, suitability, and applicability by a licensed professional engineer, designer, or architect. The publication of the material contained herein is not intended as a representation or warranty on the part of the American Institute of Steel Construction or of any other person named herein, that this information is suitable for any general or particular use or of freedom from infringement of any patent or patents. Anyone making use of this information assumes all liability arising from such use.

Caution must be exercised when relying upon other specifications and codes developed by other bodies and incorporated by reference herein since such material may be modified or amended from time to time subsequent to the printing of this edition. The Institute bears no responsibility for such material other than to refer to it and incorporate it by reference at the time of the initial publication of this edition.

Printed in the United States of America

First Printing: March 2011
Second Printing: February 2012

FOREWORD

The American Institute of Steel Construction, founded in 1921, is the nonprofit technical standards developer and trade organization for the fabricated structural steel industry in the United States. AISC is headquartered in Chicago and has a long tradition of service to the steel construction industry providing timely and reliable information.

The continuing financial support and active participation of Members in the engineering, research and development activities of the Institute make possible the publishing of this *Steel Construction Manual.* Those Members include the following: Full Members engaged in the fabrication, production and sale of structural steel; Associate Members, who include erectors, detailers, service consultants, software developers and steel product manufacturers; Professional Members, who are structural or civil engineers and architects, including architectural and engineering educators; Affiliate Members, who include general contractors, building inspectors and code officials; and Student Members.

The Institute's objective is to make structural steel the material of choice, by being the leader in structural-steel-related technical and market-building activities, including specification and code development, research, education, technical assistance, quality certification, standardization and market development.

To accomplish this objective, the Institute publishes manuals, design guides and specifications. Best known and most widely used is the *Steel Construction Manual*, which holds a highly respected position in engineering literature. The Manual is based on the *Specification for Structural Steel Buildings* and the *Code of Standard Practice for Steel Buildings and Bridges*. Both standards are included in the Manual for easy reference.

The Institute also publishes technical information and timely articles in its *Engineering Journal*, Design Guide series, *Modern Steel Construction* magazine, and other design aids, research reports and journal articles. Nearly all of the information AISC publishes is available for download from the AISC web site at **www.aisc.org**.

PREFACE

This Manual is the 14th Edition of the AISC *Steel Construction Manual*, which was first published in 1927. It replaces the 13th Edition Manual originally published in 2005.

The following specifications, codes and standards are printed in Part 16 of this Manual:

- 2010 AISC *Specification for Structural Steel Buildings*
- 2009 RCSC *Specification for Structural Joints Using High-Strength Bolts*
- 2010 AISC *Code of Standard Practice for Steel Buildings and Bridges*

The following resources supplement the Manual and are available on the AISC web site at **www.aisc.org:**

- AISC *Design Examples*, which illustrate the application of tables and specification provisions that are included in this Manual.
- AISC *Shapes Database V14.0 and V14.0H.*
- Background and supporting literature (references) for the AISC *Steel Construction Manual.*

The following major changes and improvements have been made in this revision:

- All tabular information and discussions have been updated to comply with the 2010 *Specification for Structural Buildings* and the standards and other documents referenced therein.
- Shape information has been updated to ASTM A6-09 throughout the Manual, including a new HP shape series.
- Eccentrically loaded weld tables have been revised to indicate the strongest weld permitted by the three methods listed in Chapter J of the specification and supplemented to provide strengths for L-shaped welds loaded from either side.
- The procedure for the design of bracket plates in Part 15 has been revised.
- In Part 10, the procedure for the design of conventional single plate shear connections has been revised to accommodate the increased bolt shear strengths of the 2010 *Specification for Structural Steel Buildings.*
- In Part 10, for extended single plate shear connections, information is provided to determine if stiffening plates (stabilizers) are required.

In addition, many other improvements have been made throughout this Manual and the number of accompanying design examples has been expanded.

By the AISC Committee on Manuals and Textbooks,

William A. Thornton, Chairman	Edward M. Egan
Mark V. Holland, Vice-Chairman	Marshall T. Ferrell
Abbas Aminmansour	Lanny J. Flynn
Charles J. Carter	Patrick J. Fortney
Harry A. Cole	Louis F. Geschwindner
Brad Davis	W. Scott Goodrich
Robert O. Disque	Christopher M. Hewitt
Bo Dowswell	W. Steven Hofmeister

Bill R. Lindley, II	William N. Scott
Ronald L. Meng	William T. Segui
Larry S. Muir	Victor Shneur
Thomas M. Murray	Marc L. Sorenson
Charles R. Page	Gary C. Violette
Davis G. Parsons, II	Michael A. West
Rafael Sabelli	Ronald G. Yeager
Clifford W. Schwinger	Cynthia J. Duncan, Secretary

The committee gratefully acknowledges the contributions made to this Manual by the AISC Committee on Specifications and the following individuals: Leigh C. Arber, Areti Carter, Janet T. Cummins, Amanuel Gebremeskel, Kurt Gustafson, Richard C. Kaehler, Daniel J. Kaufman, Rostislav Kucher, Brent L. Leu, Margaret A. Matthew, Frederick J. Palmer, Vijaykumar Patel, Elizabeth A. Rehwoldt, Thomas J. Schlafly, Zachary W. Stutts and Sriramulu Vinnakota.

SCOPE

The specification requirements and other design recommendations and considerations summarized in this Manual apply in general to the design and construction of steel buildings and other structures.

The design of seismic force resisting systems also must meet the requirements in the AISC *Seismic Provisions for Structural Steel Buildings*, except in the following cases for which use of the AISC *Seismic Provisions* is not required:

- Buildings and other structures in seismic design category (SDC) A
- Buildings and other structures in SDC B or C with $R = 3$ systems [steel systems not specifically detailed for seismic resistance per ASCE/SEI 7 Table 12.2-1 (ASCE, 2010)]
- Nonbuilding structures similar to buildings with $R = 1\frac{1}{2}$ braced-frame systems or $R = 1$ moment-frame systems; see ASCE/SEI 7 Table 15.4-1
- Nonbuilding structures not similar to buildings (see ASCE/SEI 7 Table 15.4-2), which are designed to meet the requirements in other standards entirely

Conversely, use of the AISC *Seismic Provisions* is required in the following cases:

- Buildings and other structures in SDC B or C when one of the exemptions for steel seismic force resisting systems above does not apply
- Buildings and other structures in SDC B or C that use composite seismic force resisting systems (those containing composite steel-and-concrete members and those composed of steel members in combination with reinforced concrete members)
- Buildings in SDC D, E or F
- Nonbuilding structures in SDC D, E or F when the exemption above does not apply

The AISC *Seismic Design Manual* provides guidance on the use of the AISC *Seismic Provisions*.

The Manual consists of seventeen parts addressing various topics related to steel building design and construction. Part 1 provides the dimensions and properties for structural products commonly used. For proper material specifications for these products, as well as general specification requirements and other design considerations, see Part 2. For the design of members, see Parts 3 through 6. For the design of connections, see Parts 7 through 15. For AISC Specifications and Codes, see Part 16. For other miscellaneous information, see Part 17.

REFERENCE

ASCE (2010), *Minimum Design Loads for Buildings and Other Structures*, ASCE/SEI 7-10, American Society of Civil Engineers, Reston, VA.

PART 1

DIMENSIONS AND PROPERTIES

SCOPE 1–3
STRUCTURAL PRODUCTS 1–3
W-, M-, S- and HP-Shapes 1–3
Channels 1–4
Angles 1–4
Structural Tees (WT-, MT- and ST-Shapes) 1–5
Hollow Structural Sections (HSS) 1–5
Pipe 1–6
Double Angles 1–6
Double Channels 1–7
W-Shapes and S-Shapes with Cap Channels 1–7
Plate Products 1–8
Raised-Pattern Floor Plates 1–9
Crane Rails 1–9
Other Structural Products 1–9
STANDARD MILL PRACTICES 1–9
Hot-Rolled Structural Shapes 1–9
Hollow Structural Sections 1–9
Pipe 1–10
Plate Products 1–10
PART 1 REFERENCES 1–11
TABLES OF DESIGN DIMENSIONS, DETAILING DIMENSIONS, AND AXIAL, STRONG-AXIS FLEXURAL, AND WEAK-AXIS FLEXURAL PROPERTIES 1–12
Table 1-1. W-Shapes 1–12
Table 1-2. M-Shapes 1–30
Table 1-3. S-Shapes 1–32
Table 1-4. HP-Shapes 1–34
Table 1-5. C-Shapes 1–36
Table 1-6. MC-Shapes 1–38
Table 1-7. Angles 1–42

Table 1-7A. Workable Gages in Angle Legs 1–48
Table 1-7B. Compactness Criteria for Angles 1–49
Table 1-8. WT-Shapes 1–50
Table 1-9. MT-Shapes 1–70
Table 1-10. ST-Shapes 1–72
Table 1-11. Rectangular HSS 1–74
Table 1-12. Square HSS 1–92
Table 1-12A. Rectangular and Square HSS Compactness Criteria 1–95
Table 1-13. Round HSS 1–96
Table 1-14. Pipe 1–101
Table 1-15. Double Angles 1–102
Table 1-16. 2C-Shapes 1–110
Table 1-17. 2MC-Shapes 1–111
Table 1-18. Weights of Raised-Pattern Floor Plates 1–113
Table 1-19. W-Shapes with Cap Channels 1–114
Table 1-20. S-Shapes with Cap Channels 1–116
Table 1-21. Crane Rails 1–118
Table 1-22. ASTM A6 Tolerances for W-Shapes and HP-Shapes 1–119
Table 1-23. ASTM A6 Tolerances for S-Shapes, M-Shapes and Channels 1–121
Table 1-24. ASTM A6 Tolerances for WT-, MT- and ST-Shapes 1–122
Table 1-25. ASTM A6 Tolerances for Angles, 3 in. and Larger 1–123
Table 1-26. ASTM A6 Tolerances for Angles, < 3 in. 1–124
Table 1-27. Tolerances for Rectangular and Square HSS 1–125
Table 1-28. Tolerances for Round HSS and Pipe 1–126
Table 1-29. Rectangular Sheared Plates 1–127

SCOPE

The dimensions and properties for structural products commonly used in steel building design and construction are given in this Part. Although the dimensions and properties tabulated in Part 1 reflect "commonly" used structural products, some of the shapes listed are not commonly produced or stocked. These shapes are usually only produced to order, and will likely be subject to mill production schedules and minimum order quantities. For availability of shapes, go to **www.aisc.org**. For torsional and flexural-torsional properties of rolled shapes see AISC Design Guide 9, *Torsional Analysis of Structural Steel Members* (Seaburg and Carter, 1997). For surface areas, box perimeters and areas, *W/D* ratios and *A/D* ratios, see AISC Design Guide 19, *Fire Resistance of Structural Steel Framing* (Ruddy et al., 2003).

STRUCTURAL PRODUCTS

W-, M-, S- and HP-Shapes

Four types of H-shaped (or I-shaped) members are covered in this Manual:

- W-shapes, which have essentially parallel inner and outer flange surfaces.
- M-shapes, which are H-shaped members that are not classified in ASTM A6 as W-, S- or HP-shapes. M-shapes may have a sloped inside flange face or other cross-section features that do not meet the criteria for W-, S- or HP-shapes.
- S-shapes (also known as American standard beams), which have a slope of approximately $16^2/_3\%$ (2 on 12) on the inner flange surfaces.
- HP-shapes (also known as bearing piles), which are similar to W-shapes except their webs and flanges are of equal thickness and the depth and flange width are nominally equal for a given designation.

These shapes are designated by the mark W, M, S or HP, nominal depth (in.) and nominal weight (lb/ft). For example, a W24×55 is a W-shape that is nominally 24 in. deep and weighs 55 lb/ft.

The following dimensional and property information is given in this Manual for the W-, M-, S- and HP-shapes covered in ASTM A6:

- Design dimensions, detailing dimensions, axial properties and flexural properties are given in Tables 1-1, 1-2, 1-3 and 1-4 for W-, M-, S- and HP-shapes, respectively.
- SI-equivalent designations are given in Table 17-1 for W-shapes and in Table 17-2 for M-, S- and HP-shapes.

Tabulated decimal values are appropriate for use in design calculations, whereas fractional values are appropriate for use in detailing. All decimal and fractional values are similar with one exception: Because of the variation in fillet sizes used in shape production, the decimal value, k_{des}, is conservatively presented based on the smallest fillet used in production, and the fractional value, k_{det}, is conservatively presented based on the largest fillet used in production. For the definitions of the tabulated variables, refer to the Nomenclature section at the back of this Manual.

When appropriate, this Manual presents tabulated values for the workable gage of a section. The term workable gage refers to the gage for fasteners in the flange that provides for entering and tightening clearances and edge distance and spacing requirements. When

the listed value is footnoted, the actual size, combination, and orientation of fastener components should be compared with the geometry of the cross section to ensure compatibility. Other gages that provide for entering and tightening clearances and edge distance and spacing requirements can also be used.

Channels

Two types of channels are covered in this Manual:

- C-shapes (also known as American standard channels), which have a slope of approximately $16^2/_3\%$ (2 on 12) on the inner flange surfaces.
- MC-shapes (also known as miscellaneous channels), which have a slope other than $16^2/_3\%$ (2 on 12) on the inner flange surfaces.

These shapes are designated by the mark C or MC, nominal depth (in.) and nominal weight (lb/ft). For example, a C12×25 is a C-shape that is nominally 12 in. deep and weighs 25 lb/ft.

The following dimensional and property information is given in this Manual for the channels covered in ASTM A6:

- Design dimensions, detailing dimensions, and axial, flexural and torsional properties are given in Tables 1-5 and 1-6 for C- and MC-shapes, respectively.
- SI-equivalent designations are given in Table 17-3.

For the definitions of the tabulated variables, refer to the Nomenclature section at the back of this Manual.

Angles

Angles (also known as L-shapes) have legs of equal thickness and either equal or unequal leg sizes. Angles are designated by the mark L, leg sizes (in.) and thickness (in.). For example, an L4×3×$^1/_2$ is an angle with one 4-in. leg, one 3-in. leg, and $^1/_2$-in. thickness.

The following dimensional and property information is given in this Manual for the angles covered in ASTM A6:

- Design dimensions, detailing dimensions, and axial, flexural and flexural-torsional properties are given in Table 1-7. The effects of leg-to-leg and toe fillet radii have been considered in the determination of these section properties. The S_z value that is given in Table 1-7 is based on the largest perpendicular distance measured from the z-axis to the center of the thickness at the tip of the angle toe(s) or heel. Additional properties of single angles are provided in the digital shapes database available at **www.aisc.org**. These properties are used for calculations involving z and w principal axes. For unequal leg angles, the database includes I, and values of S at the toe of the short leg, the heel, and the toe of the long leg, for the w and z principal axes. For equal leg angles, the database includes I, and values of S at the toe of the leg and the heel, for w and z principal axes.
- Workable gages on angle legs are tabulated in Table 1-7A.
- Compactness criteria for angles are tabulated in Table 1-7B.
- SI-equivalent designations are given in Table 17-4.

For the definitions of the tabulated variables, refer to the Nomenclature section at the back of this Manual.

Structural Tees (WT-, MT- and ST-Shapes)

Three types of structural tees are covered in this Manual:

- WT-shapes, which are made from W-shapes
- MT-shapes, which are made from M-shapes
- ST-shapes, which are made from S-shapes

These shapes are designated by the mark WT, MT or ST, nominal depth (in.) and nominal weight (lb/ft). WT-, MT- and ST-shapes are split (sheared or thermal-cut) from W-, M- and S-shapes, respectively, and have half the nominal depth and weight of that shape. For example, a WT12×27.5 is a structural tee split from a W-shape (W24×55), is nominally 12 in. deep and weighs 27.5 lb/ft. Although off-center splitting or splitting on two lines can be obtained by special order, the resulting nonstandard shape is not covered in this Manual.

The following dimensional and property information is given in this Manual for the structural tees cut from the W-, M- and S-shapes covered in ASTM A6:

- Design dimensions, detailing dimensions, and axial, flexural and torsional properties are given in Tables 1-8, 1-9 and 1-10 for WT-, MT- and ST-shapes, respectively.
- SI-equivalent designations are given in Table 17-5 for WT-shapes and in Table 17-6 for MT- and ST-shapes.

For the definitions of the tabulated variables, refer to the Nomenclature section at the back of this Manual.

Hollow Structural Sections (HSS)

Three types of HSS are covered in this Manual:

- Rectangular HSS, which have an essentially rectangular cross section, except for rounded corners, and uniform wall thickness, except at the weld seam(s)
- Square HSS, which have an essentially square cross section, except for rounded corners, and uniform wall thickness, except at the weld seam(s)
- Round HSS, which have an essentially round cross section and uniform wall thickness, except at the weld seam(s)

In each case, ASTM A500 covers only electric-resistance-welded (ERW) HSS with a maximum periphery of 64 in. The coverage of HSS in this Manual is similarly limited.

Rectangular HSS are designated by the mark HSS, overall outside dimensions (in.), and wall thickness (in.), with all dimensions expressed as fractional numbers. For example, an HSS10×10×1/2 is nominally 10 in. by 10 in. with a 1/2-in. wall thickness. Round HSS are designated by the term HSS, nominal outside diameter (in.), and wall thickness (in.) with both dimensions expressed to three decimal places. For example, an HSS10.000×0.500 is nominally 10 in. in diameter with a 1/2-in. nominal wall thickness.

Per AISC *Specification* Section B4.2, the wall thickness used in design, t_{des}, is taken as 0.93 times the nominal wall thickness, t_{nom}. The rationale for this requirement is explained in the corresponding *Specification* Commentary Section B4.2.

In calculating the tabulated b/t and h/t ratios, the outside corner radii are taken as $1.5t_{des}$ for rectangular and square HSS, per AISC *Specification* Section B4.1. In other tabulated design dimensions, the corner radii are taken as $2t_{des}$. In the tabulated workable flat dimen-

sions of rectangular (and square) HSS, the outside corner radii are taken as $2.25t_{nom}$. The term workable flat refers to a reasonable flat width or depth of material for use in making connections to HSS. The workable flat dimension is provided as a reflection of current industry practice, although the tolerances of ASTM A500 allow a greater maximum corner radius of $3t_{nom}$.

The following dimensional and property information is given in this Manual for the HSS covered in ASTM A500, A501, A618 or A847:

- Design dimensions, detailing dimensions, and axial, strong-axis flexural, weak-axis flexural, torsional, and flexural-torsional properties are given in Tables 1-11 and 1-12 for rectangular and square HSS, respectively.
- Design dimensions, detailing dimensions, and axial, flexural and torsional properties are given in Table 1-13 for round HSS.
- SI-equivalent designations are given in Tables 17-7, 17-8 and 17-9 for rectangular, square and round HSS, respectively.
- Compactness criteria of rectangular and square HSS are given in Table 1-12A.

For the definitions of the tabulated variables, refer to the Nomenclature section at the back of this Manual.

Pipe

Pipes have an essentially round cross section and uniform thickness, except at the weld seam(s) for welded pipe.

Pipes up to and including NPS 12 are designated by the term Pipe, nominal diameter (in.) and weight class (Std., x-Strong, xx-Strong). NPS stands for nominal pipe size. For example, Pipe 5 Std. denotes a pipe with a 5-in. nominal diameter and a 0.258-in. wall thickness, which corresponds to the standard weight series. Pipes with wall thicknesses that do not correspond to the foregoing weight classes are designated by the term Pipe, outside diameter (in.), and wall thickness (in.) with both expressed to three decimal places. For example, Pipe 14.000×0.375 and Pipe 5.563×0.500 are proper designations.

Per AISC *Specification* Section B4.2, the wall thickness used in design, t_{des}, is taken as 0.93 times the nominal wall thickness, t_{nom}. The rationale for this requirement is explained in the corresponding *Specification* Commentary Section B4.2.

The following dimensional and property information is given in this Manual for the pipes covered in ASTM A53:

- Design dimensions, detailing dimensions, and axial, flexural and torsional properties are given in Table 1-14.
- SI-equivalent designations are given in Table 17-10.

For the definitions of the tabulated variables, refer to the Nomenclature section at the back of this Manual.

Double Angles

Double angles (also known as 2L-shapes) are made with two angles that are interconnected through their back-to-back legs along the length of the member, either in contact for the full length or separated by spacers at the points of interconnection.

These shapes are designated by the mark 2L, the sizes and thickness of their legs (in.), and their orientation when the angle legs are not of equal size (LLBB or SLBB).[1] For example, a 2L4×3×1/2 LLBB has two angles with one 4-in. leg and one 3-in. leg and the 4-in. legs are back-to-back; a 2L4×3×1/2 SLBB is similar, except the 3-in. legs are back-to-back. In both cases, the legs are 1/2-in. thick.

The following dimensional and property information is given in this Manual for the double angles built-up from the angles covered in ASTM A6:

- Design dimensions, detailing dimensions, and axial, strong-axis flexural, weak-axis flexural, torsional, and flexural-torsional properties are given in Table 1-15 for equal-leg, LLBB and SLBB angles. In each case, angle separations of zero in., 3/8 in. and 3/4 in. are covered. The effects of leg-to-leg and toe fillet radii have been considered in the determination of these section properties. For workable gages on legs of angles, see Table 1-7A.

For the definitions of the tabulated variables, refer to the Nomenclature section at the back of this Manual.

Double Channels

Double channels (also known as 2C- and 2MC-shapes) are made with two channels that are interconnected through their back-to-back webs along the length of the member, either in contact for the full length or separated by spacers at the points of interconnection.

These shapes are designated by the mark 2C or 2MC, nominal depth (in.), and nominal weight per channel (lb/ft). For example, a 2C12×25 is a double channel that consists of two channels that are each nominally 12 in. deep and each weigh 25 lb/ft.

The following dimensional and property information is given in this Manual for the double channels built-up from the channels covered in ASTM A6:

- Design dimensions, detailing dimensions, and axial, strong-axis flexural, and weak-axis flexural properties are given in Tables 1-16 and 1-17 for 2C- and 2MC-shapes, respectively. In each case, channel separations of zero, 3/8 in. and 3/4 in. are covered.

For the definitions of the tabulated variables, refer to the Nomenclature section at the back of this Manual.

W-Shapes and S-Shapes with Cap Channels

Common combined sections made with W- or S-shapes and channels (C- or MC-shapes) are tabulated in this Manual. In either case, the channel web is interconnected to the W-shape or S-shape top flange, respectively, with the flange toes down. The interconnection of the two elements must be designed for the horizontal shear, q, where

$$q = \frac{VQ}{I} \tag{1-1}$$

[1] LLBB stands for long legs back-to-back. SLBB stands for short legs back-to-back. Alternatively, the orientations LLV and SLV, which stand for long legs vertical and short legs vertical, respectively, can be used.

where

I = moment of inertia of the combined cross section, in.^{4}
Q = first moment of the channel area about the neutral axis of the combined cross section, in.^{3}
V = vertical shear, kips
q = horizontal shear, kips/in.

The effects of other forces, such as crane horizontal and lateral forces, may also require consideration, when applicable.

The following dimensional and property information is given in this Manual for combined sections built-up from the W-shapes, S-shapes and cap channels covered in ASTM A6:

- Design dimensions, detailing dimensions, and axial, strong-axis flexural, and weak-axis flexural properties of W-shapes with cap channels are given in Table 1-19.
- Design dimensions, detailing dimensions, and axial, strong-axis flexural, and weak-axis flexural properties of S-shapes with cap channels are given in Table 1-20.

For the definitions of the tabulated variables, refer to the Nomenclature section at the back of this Manual.

Plate Products

Plate products may be ordered as sheet, strip or bar material. Sheet and strip are distinguished from structural bars and plates by their dimensional characteristics, as outlined in Table 2-3 and Table 2-5.

The historical classification system for structural bars and plates suggests that there is only a physical difference between them based upon size and production procedure. In raw form, flat stock has historically been classified as a bar if it is less than or equal to 8 in. wide and as a plate if it is greater than 8 in. wide. Bars are rolled between horizontal and vertical rolls and trimmed to length by shearing or thermal cutting on the ends only. Plates are generally produced using one of two methods:

1. Sheared plates are rolled between horizontal rolls and trimmed to width and length by shearing or thermal cutting on the edges and ends; or
2. Stripped plates are sheared or thermal cut from wider sheared plates.

There is very little, if any, structural difference between plates and bars. Consequently, the term plate is becoming a universally applied term today and a PL$^1/_2$ in.×4$^1/_2$ in.×1ft 3 in., for example, might be fabricated from plate or bar stock.

For structural plates, the preferred practice is to specify thickness in $^1/_{16}$-in. increments up to $^3/_8$-in. thickness, $^1/_8$-in. increments over $^3/_8$-in. to 1-in. thickness, and $^1/_4$-in. increments over 1-in. thickness. The current extreme width for sheared plates is 200 in. Because mill practice regarding plate widths vary, individual mills should be consulted to determine preferences.

For bars, the preferred practice is to specify width in $^1/_4$-in. increments, and thickness and diameter in $^1/_8$-in. increments.

Raised-Pattern Floor Plates

Weights of raised-pattern floor plates are given in Table 1-18. Raised-pattern floor plates are commonly available in widths up to 120 in. For larger plate widths, see literature available from floor plate producers.

Crane Rails

Although crane rails are not listed as structural steel in the AISC *Code of Standard Practice* Section 2.1, this information is provided because some fabricators may choose to provide crane rails. Crane rails are designated by unit weight in lb/yard. Dimensions and properties for the crane rails shown are given in Table 1-21. Crane rails can be either heat treated or end hardened to reduce wear. For additional information or for profiles and properties of crane rails not listed, manufacturer's catalogs should be consulted. For crane-rail connections, see Part 15.

Other Structural Products

The following other structural products are covered in this Manual as indicated:

- High-strength bolts, common bolts, washers, nuts and direct-tension-indicator washers are covered in Part 7.
- Welding filler metals and fluxes are covered in Part 8.
- Forged steel structural hardware items, such as clevises, turnbuckles, sleeve nuts, recessed-pin nuts, and cotter pins are covered in Part 15.
- Anchor rods and threaded rods are covered in Part 14.

STANDARD MILL PRACTICES

The production of structural products is subject to unavoidable variations relative to the theoretical dimensions and profiles, due to many factors, including roll wear, roll dressing practices and temperature effects. Such variations are limited by the dimensional and profile tolerances as summarized below.

Hot-Rolled Structural Shapes

Acceptable dimensional tolerances for hot-rolled structural shapes (W-, M-, S- and HP-shapes), channels (C- and MC-shapes), and angles are given in ASTM A6 Section 12 and summarized in Tables 1-22 through 1-26. Supplementary information, including permissible variations for sheet and strip and for other grades of steel, can also be found in literature from steel plate producers and the Association of Iron and Steel Technology.

Hollow Structural Sections

Acceptable dimensional tolerances for HSS are given in ASTM A500 Section 11, A501 Section 12, A618 Section 8, or A847 Section 10, as applicable, and summarized in Tables 1-27 and 1-28, for rectangular and round HSS, respectively. Supplementary information

can also be found in literature from HSS producers and the Steel Tube Institute, such as *Recommended Methods to Check Dimensional Tolerances on Hollow Structural Sections (HSS) Made to ASTM A500.*

Pipe

Acceptable dimensional tolerances for pipes are given in ASTM A53 Section 10 and summarized in Table 1-28. Supplementary information can also be found in literature from pipe producers.

Plate Products

Acceptable dimensional tolerances for plate products are given in ASTM A6 Section 12 and summarized in Table 1-29. Note that plate thickness can be specified in inches or by weight per square foot, and separate tolerances apply to each method. No decimal edge thickness can be assured for plate specified by the latter method. Supplementary information, including permissible variations for sheet and strip and for other grades of steel, can also be found in literature from steel plate producers and the Association of Iron and Steel Technology.

PART 1 REFERENCES

Ruddy, J.L., Marlo, J.P., Ioannides, S.A. and Alfawakhiri, F. (2003), *Fire Resistance of Structural Steel Framing*, Design Guide 19, AISC, Chicago, IL.

Seaburg, P.A. and Carter, C.J. (1997), *Torsional Analysis of Structural Steel Members*, Design Guide 9, AISC, Chicago, IL.

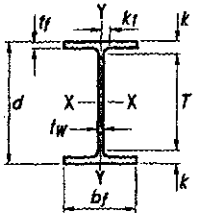

Table 1-1
W-Shapes
Dimensions

Shape	Area, A	Depth, d		Web			Flange				Distance				Work-able Gage
				Thickness, t_w		$\frac{t_w}{2}$	Width, b_f		Thickness, t_f		k		k_1	T	
											k_{des}	k_{det}			
	in.^{2}	in.		in.		in.	in.		in.		in.	in.	in.	in.	in.
W44×335[c]	98.5	44.0	44	1.03	1	1/2	15.9	16	1.77	1 3/4	2.56	2 5/8	1 5/16	38 3/4	5 1/2
×290[c]	85.4	43.6	43 5/8	0.865	7/8	7/16	15.8	15 7/8	1.58	1 9/16	2.36	2 7/16	1 1/4		
×262[c]	77.2	43.3	43 1/4	0.785	13/16	7/16	15.8	15 3/4	1.42	1 7/16	2.20	2 1/4	1 3/16		
×230[c,v]	67.8	42.9	42 7/8	0.710	11/16	3/8	15.8	15 3/4	1.22	1 1/4	2.01	2 1/16	1 3/16		
W40×593[h]	174	43.0	43	1.79	1 13/16	15/16	16.7	16 3/4	3.23	3 1/4	4.41	4 1/2	2 1/8	34	7 1/2
×503[h]	148	42.1	42	1.54	1 9/16	13/16	16.4	16 3/8	2.76	2 3/4	3.94	4	2		
×431[h]	127	41.3	41 1/4	1.34	1 5/16	11/16	16.2	16 1/4	2.36	2 3/8	3.54	3 5/8	1 7/8		
×397[h]	117	41.0	41	1.22	1 1/4	5/8	16.1	16 1/8	2.20	2 3/16	3.38	3 1/2	1 13/16		
×372[h]	110	40.6	40 5/8	1.16	1 3/16	5/8	16.1	16 1/8	2.05	2 1/16	3.23	3 5/16	1 13/16		
×362[h]	106	40.6	40 1/2	1.12	1 1/8	9/16	16.0	16	2.01	2	3.19	3 1/4	1 3/4		
×324	95.3	40.2	40 1/8	1.00	1	1/2	15.9	15 7/8	1.81	1 13/16	2.99	3 1/16	1 11/16		
×297[c]	87.3	39.8	39 7/8	0.930	15/16	1/2	15.8	15 7/8	1.65	1 5/8	2.83	2 15/16	1 11/16		
×277[c]	81.5	39.7	39 3/4	0.830	13/16	7/16	15.8	15 7/8	1.58	1 9/16	2.76	2 7/8	1 5/8		
×249[c]	73.5	39.4	39 3/8	0.750	3/4	3/8	15.8	15 3/4	1.42	1 7/16	2.60	2 11/16	1 9/16		
×215[c]	63.5	39.0	39	0.650	5/8	5/16	15.8	15 3/4	1.22	1 1/4	2.40	2 1/2	1 9/16		
×199[c]	58.8	38.7	38 5/8	0.650	5/8	5/16	15.8	15 3/4	1.07	1 1/16	2.25	2 5/16	1 9/16		
W40×392[h]	116	41.6	41 3/8	1.42	1 7/16	3/4	12.4	12 3/8	2.52	2 1/2	3.70	3 13/16	1 15/16	34	7 1/2
×331[h]	97.7	40.8	40 3/4	1.22	1 1/4	5/8	12.2	12 1/8	2.13	2 1/8	3.31	3 3/8	1 13/16		
×327[h]	95.9	40.8	40 3/4	1.18	1 3/16	5/8	12.1	12 1/8	2.13	2 1/8	3.31	3 3/8	1 13/16		
×294	86.2	40.4	40 3/8	1.06	1 1/16	9/16	12.0	12	1.93	1 15/16	3.11	3 3/16	1 3/4		
×278	82.3	40.2	40 1/8	1.03	1	1/2	12.0	12	1.81	1 13/16	2.99	3 1/16	1 3/4		
×264	77.4	40.0	40	0.960	15/16	1/2	11.9	11 7/8	1.73	1 3/4	2.91	3	1 11/16		
×235[c]	69.1	39.7	39 3/4	0.830	13/16	7/16	11.9	11 7/8	1.58	1 9/16	2.76	2 7/8	1 5/8		
×211[c]	62.1	39.4	39 3/8	0.750	3/4	3/8	11.8	11 3/4	1.42	1 7/16	2.60	2 11/16	1 9/16		
×183[c]	53.3	39.0	39	0.650	5/8	5/16	11.8	11 3/4	1.20	1 3/16	2.38	2 1/2	1 9/16		
×167[c]	49.3	38.6	38 5/8	0.650	5/8	5/16	11.8	11 3/4	1.03	1	2.21	2 5/16	1 9/16		
×149[c,v]	43.8	38.2	38 1/4	0.630	5/8	5/16	11.8	11 3/4	0.830	13/16	2.01	2 1/8	1 1/2		

[c] Shape is slender for compression with $F_y = 50$ ksi.
[h] Flange thickness greater than 2 in. Special requirements may apply per AISC *Specification* Section A3.1c.
[v] Shape does not meet the h/t_w limit for shear in AISC *Specification* Section G2.1(a) with $F_y = 50$ ksi.

Table 1-1 (continued)
W-Shapes
Properties

W44-W40

Nominal Wt.	Compact Section Criteria		Axis X-X				Axis Y-Y				r_{ts}	h_o	Torsional Properties	
	$\frac{b_f}{2t_f}$	$\frac{h}{t_w}$	I	S	r	Z	I	S	r	Z			J	C_w
lb/ft			in.^{4}	in.^{3}	in.	in.^{3}	in.^{4}	in.^{3}	in.	in.^{3}	in.	in.	in.^{4}	in.^{6}
335	4.50	38.0	31100	1410	17.8	1620	1200	150	3.49	236	4.24	42.2	74.7	535000
290	5.02	45.0	27000	1240	17.8	1410	1040	132	3.49	205	4.20	42.0	50.9	461000
262	5.57	49.6	24100	1110	17.7	1270	923	117	3.47	182	4.17	41.9	37.3	405000
230	6.45	54.8	20800	971	17.5	1100	796	101	3.43	157	4.13	41.7	24.9	346000
593	2.58	19.1	50400	2340	17.0	2760	2520	302	3.80	481	4.63	39.8	445	997000
503	2.98	22.3	41600	1980	16.8	2320	2040	249	3.72	394	4.50	39.3	277	789000
431	3.44	25.5	34800	1690	16.6	1960	1690	208	3.65	328	4.41	38.9	177	638000
397	3.66	28.0	32000	1560	16.6	1800	1540	191	3.64	300	4.38	38.8	142	579000
372	3.93	29.5	29600	1460	16.5	1680	1420	177	3.60	277	4.33	38.6	116	528000
362	3.99	30.5	28900	1420	16.5	1640	1380	173	3.60	270	4.33	38.6	109	513000
324	4.40	34.2	25600	1280	16.4	1460	1220	153	3.58	239	4.27	38.4	79.4	448000
297	4.80	36.8	23200	1170	16.3	1330	1090	138	3.54	215	4.22	38.2	61.2	399000
277	5.03	41.2	21900	1100	16.4	1250	1040	132	3.58	204	4.25	38.1	51.5	379000
249	5.55	45.6	19600	993	16.3	1120	926	118	3.55	182	4.21	38.0	38.1	334000
215	6.45	52.6	16700	859	16.2	964	803	101	3.54	156	4.19	37.8	24.8	284000
199	7.39	52.6	14900	770	16.0	869	695	88.2	3.45	137	4.12	37.6	18.3	246000
392	2.45	24.1	29900	1440	16.1	1710	803	130	2.64	212	3.30	39.1	172	306000
331	2.86	28.0	24700	1210	15.9	1430	644	106	2.57	172	3.21	38.7	105	241000
327	2.85	29.0	24500	1200	16.0	1410	640	105	2.58	170	3.21	38.7	103	239000
294	3.11	32.2	21900	1080	15.9	1270	562	93.5	2.55	150	3.16	38.5	76.6	208000
278	3.31	33.3	20500	1020	15.8	1190	521	87.1	2.52	140	3.13	38.4	65.0	192000
264	3.45	35.6	19400	971	15.8	1130	493	82.6	2.52	132	3.12	38.3	56.1	181000
235	3.77	41.2	17400	875	15.9	1010	444	74.6	2.54	118	3.11	38.1	41.3	161000
211	4.17	45.6	15500	786	15.8	906	390	66.1	2.51	105	3.07	38.0	30.4	141000
183	4.92	52.6	13200	675	15.7	774	331	56.0	2.49	88.3	3.04	37.8	19.3	118000
167	5.76	52.6	11600	600	15.3	693	283	47.9	2.40	76.0	2.98	37.6	14.0	99700
149	7.11	54.3	9800	513	15.0	598	229	38.8	2.29	62.2	2.89	37.4	9.36	80000

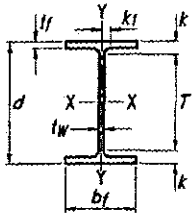

Table 1-1 (continued)
W-Shapes
Dimensions

Shape	Area, A	Depth, d	Web			Flange				Distance				
			Thickness, t_w		$\frac{t_w}{2}$	Width, b_f		Thickness, t_f		k		k_1	T	Work-able Gage
										k_{des}	k_{det}			
	in.^{2}	in.	in.		in.	in.		in.		in.	in.	in.	in.	in.
W36×652[h]	192	41.1	41	1.97	2	1	17.6	17 5/8	3.54	3 9/16	4.49	4 13/16	2 3/16	31 3/8	7 1/2
×529[h]	156	39.8	39 3/4	1.61	1 5/8	13/16	17.2	17 1/4	2.91	2 15/16	3.86	4 3/16	2		
×487[h]	143	39.3	39 3/8	1.50	1 1/2	3/4	17.1	17 1/8	2.68	2 11/16	3.63	4	1 7/8		
×441[h]	130	38.9	38 7/8	1.36	1 3/8	11/16	17.0	17	2.44	2 7/16	3.39	3 3/4	1 7/8		
×395[h]	116	38.4	38 3/8	1.22	1 1/4	5/8	16.8	16 7/8	2.20	2 3/16	3.15	3 7/16	1 13/16		
×361[h]	106	38.0	38	1.12	1 1/8	9/16	16.7	16 3/4	2.01	2	2.96	3 5/16	1 3/4		
×330	96.9	37.7	37 5/8	1.02	1	1/2	16.6	16 5/8	1.85	1 7/8	2.80	3 1/8	1 3/4		
×302	89.0	37.3	37 3/8	0.945	15/16	1/2	16.7	16 5/8	1.68	1 11/16	2.63	3	1 11/16		
×282[c]	82.9	37.1	37 1/8	0.885	7/8	7/16	16.6	16 5/8	1.57	1 9/16	2.52	2 7/8	1 5/8		
×262[c]	77.2	36.9	36 7/8	0.840	13/16	7/16	16.6	16 1/2	1.44	1 7/16	2.39	2 3/4	1 5/8		
×247[c]	72.5	36.7	36 5/8	0.800	13/16	7/16	16.5	16 1/2	1.35	1 3/8	2.30	2 5/8	1 5/8		
×231[c]	68.2	36.5	36 1/2	0.760	3/4	3/8	16.5	16 1/2	1.26	1 1/4	2.21	2 9/16	1 9/16		
W36×256	75.3	37.4	37 3/8	0.960	15/16	1/2	12.2	12 1/4	1.73	1 3/4	2.48	2 5/8	1 5/16	32 1/8	5 1/2
×232[c]	68.0	37.1	37 1/8	0.870	7/8	7/16	12.1	12 1/8	1.57	1 9/16	2.32	2 7/16	1 1/4		
×210[c]	61.9	36.7	36 3/4	0.830	13/16	7/16	12.2	12 1/8	1.36	1 3/8	2.11	2 5/16	1 1/4		
×194[c]	57.0	36.5	36 1/2	0.765	3/4	3/8	12.1	12 1/8	1.26	1 1/4	2.01	2 3/16	1 3/16		
×182[c]	53.6	36.3	36 3/8	0.725	3/4	3/8	12.1	12 1/8	1.18	1 3/16	1.93	2 1/8	1 3/16		
×170[c]	50.0	36.2	36 1/8	0.680	11/16	3/8	12.0	12	1.10	1 1/8	1.85	2	1 3/16		
×160[c]	47.0	36.0	36	0.650	5/8	5/16	12.0	12	1.02	1	1.77	1 15/16	1 1/8		
×150[c]	44.3	35.9	35 7/8	0.625	5/8	5/16	12.0	12	0.940	15/16	1.69	1 7/8	1 1/8		
×135[c,v]	39.9	35.6	35 1/2	0.600	5/8	5/16	12.0	12	0.790	13/16	1.54	1 11/16	1 1/8		
W33×387[h]	114	36.0	36	1.26	1 1/4	5/8	16.2	16 1/4	2.28	2 1/4	3.07	3 3/16	1 7/16	29 5/8	5 1/2
×354[h]	104	35.6	35 1/2	1.16	1 3/16	5/8	16.1	16 1/8	2.09	2 1/16	2.88	2 15/16	1 3/8		
×318	93.7	35.2	35 1/8	1.04	1 1/16	9/16	16.0	16	1.89	1 7/8	2.68	2 3/4	1 5/16		
×291	85.6	34.8	34 7/8	0.960	15/16	1/2	15.9	15 7/8	1.73	1 3/4	2.52	2 5/8	1 5/16		
×263	77.4	34.5	34 1/2	0.870	7/8	7/16	15.8	15 3/4	1.57	1 9/16	2.36	2 7/16	1 1/4		
×241[c]	71.1	34.2	34 1/8	0.830	13/16	7/16	15.9	15 7/8	1.40	1 3/8	2.19	2 1/4	1 1/4		
×221[c]	65.3	33.9	33 7/8	0.775	3/4	3/8	15.8	15 3/4	1.28	1 1/4	2.06	2 1/8	1 3/16		
×201[c]	59.1	33.7	33 5/8	0.715	11/16	3/8	15.7	15 3/4	1.15	1 1/8	1.94	2	1 3/16		
W33×169[c]	49.5	33.8	33 7/8	0.670	11/16	3/8	11.5	11 1/2	1.22	1 1/4	1.92	2 1/8	1 3/16	29 5/8	5 1/2
×152[c]	44.9	33.5	33 1/2	0.635	5/8	5/16	11.6	11 5/8	1.06	1 1/16	1.76	1 15/16	1 1/8		
×141[c]	41.5	33.3	33 1/4	0.605	5/8	5/16	11.5	11 1/2	0.960	15/16	1.66	1 13/16	1 1/8		
×130[c]	38.3	33.1	33 1/8	0.580	9/16	5/16	11.5	11 1/2	0.855	7/8	1.56	1 3/4	1 1/8		
×118[c,v]	34.7	32.9	32 7/8	0.550	9/16	5/16	11.5	11 1/2	0.740	3/4	1.44	1 5/8	1 1/8		

[c] Shape is slender for compression with $F_y = 50$ ksi.
[h] Flange thickness greater than 2 in. Special requirements may apply per AISC *Specification* Section A3.1c.
[v] Shape does not meet the h/t_w limit for shear in AISC *Specification* Section G2.1(a) with $F_y = 50$ ksi.

Table 1-1 (continued)
W-Shapes
Properties

W36-W33

Nominal Wt.	Compact Section Criteria		Axis X-X				Axis Y-Y				r_{ts}	h_o	Torsional Properties	
	$\frac{b_f}{2t_f}$	$\frac{h}{t_w}$	I	S	r	Z	I	S	r	Z			J	C_w
lb/ft			in.^{4}	in.^{3}	in.	in.^{3}	in.^{4}	in.^{3}	in.	in.^{3}	in.	in.	in.^{4}	in.^{6}
652	2.48	16.3	50600	2460	16.2	2910	3230	367	4.10	581	4.96	37.6	593	1130000
529	2.96	19.9	39600	1990	16.0	2330	2490	289	4.00	454	4.80	36.9	327	846000
487	3.19	21.4	36000	1830	15.8	2130	2250	263	3.96	412	4.74	36.6	258	754000
441	3.48	23.6	32100	1650	15.7	1910	1990	235	3.92	368	4.69	36.5	194	661000
395	3.83	26.3	28500	1490	15.7	1710	1750	208	3.88	325	4.61	36.2	142	575000
361	4.16	28.6	25700	1350	15.6	1550	1570	188	3.85	293	4.58	36.0	109	509000
330	4.49	31.4	23300	1240	15.5	1410	1420	171	3.83	265	4.53	35.9	84.3	456000
302	4.96	33.9	21100	1130	15.4	1280	1300	156	3.82	241	4.53	35.6	64.3	412000
282	5.29	36.2	19600	1050	15.4	1190	1200	144	3.80	223	4.50	35.5	52.7	378000
262	5.75	38.2	17900	972	15.3	1100	1090	132	3.76	204	4.46	35.5	41.6	342000
247	6.11	40.1	16700	913	15.2	1030	1010	123	3.74	190	4.42	35.4	34.7	316000
231	6.54	42.2	15600	854	15.1	963	940	114	3.71	176	4.40	35.2	28.7	292000
256	3.53	33.8	16800	895	14.9	1040	528	86.5	2.65	137	3.24	35.7	52.9	168000
232	3.86	37.3	15000	809	14.8	936	468	77.2	2.62	122	3.21	35.5	39.6	148000
210	4.48	39.1	13200	719	14.6	833	411	67.5	2.58	107	3.18	35.3	28.0	128000
194	4.81	42.4	12100	664	14.6	767	375	61.9	2.56	97.7	3.15	35.2	22.2	116000
182	5.12	44.8	11300	623	14.5	718	347	57.6	2.55	90.7	3.13	35.1	18.5	107000
170	5.47	47.7	10500	581	14.5	668	320	53.2	2.53	83.8	3.11	35.1	15.1	98500
160	5.88	49.9	9760	542	14.4	624	295	49.1	2.50	77.3	3.09	35.0	12.4	90200
150	6.37	51.9	9040	504	14.3	581	270	45.1	2.47	70.9	3.06	35.0	10.1	82200
135	7.56	54.1	7800	439	14.0	509	225	37.7	2.38	59.7	2.99	34.8	7.00	68100
387	3.55	23.7	24300	1350	14.6	1560	1620	200	3.77	312	4.49	33.7	148	459000
354	3.85	25.7	22000	1240	14.5	1420	1460	181	3.74	282	4.44	33.5	115	408000
318	4.23	28.7	19500	1110	14.5	1270	1290	161	3.71	250	4.40	33.3	84.4	357000
291	4.60	31.0	17700	1020	14.4	1160	1160	146	3.68	226	4.34	33.1	65.1	319000
263	5.03	34.3	15900	919	14.3	1040	1040	131	3.66	202	4.31	32.9	48.7	281000
241	5.66	35.9	14200	831	14.1	940	933	118	3.62	182	4.29	32.8	36.2	251000
221	6.20	38.5	12900	759	14.1	857	840	106	3.59	164	4.25	32.6	27.8	224000
201	6.85	41.7	11600	686	14.0	773	749	95.2	3.56	147	4.21	32.6	20.8	198000
169	4.71	44.7	9290	549	13.7	629	310	53.9	2.50	84.4	3.03	32.6	17.7	82400
152	5.48	47.2	8160	487	13.5	559	273	47.2	2.47	73.9	3.01	32.4	12.4	71700
141	6.01	49.6	7450	448	13.4	514	246	42.7	2.43	66.9	2.98	32.3	9.70	64400
130	6.73	51.7	6710	406	13.2	467	218	37.9	2.39	59.5	2.94	32.2	7.37	56600
118	7.76	54.5	5900	359	13.0	415	187	32.6	2.32	51.3	2.89	32.2	5.30	48300

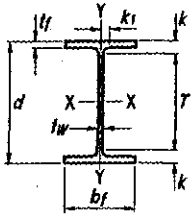

Table 1-1 (continued)
W-Shapes
Dimensions

Shape	Area, A	Depth, d		Web			Flange				Distance					Work-able Gage
				Thickness, t_w		$\frac{t_w}{2}$	Width, b_f		Thickness, t_f		k		k_1	T		
											k_{des}	k_{det}				
	in.²	in.		in.		in.	in.		in.		in.	in.	in.	in.		in.
W30×391[h]	115	33.2	33 1/4	1.36	1 3/8	11/16	15.6	15 5/8	2.44	2 7/16	3.23	3 3/8	1 1/2	26 1/2		5 1/2
×357[h]	105	32.8	32 3/4	1.24	1 1/4	5/8	15.5	15 1/2	2.24	2 1/4	3.03	3 1/8	1 7/16			
×326[h]	95.9	32.4	32 3/8	1.14	1 1/8	9/16	15.4	15 3/8	2.05	2 1/16	2.84	2 15/16	1 3/8			
×292	86.0	32.0	32	1.02	1	1/2	15.3	15 1/4	1.85	1 7/8	2.64	2 3/4	1 5/16			
×261	77.0	31.6	31 5/8	0.930	15/16	1/2	15.2	15 1/8	1.65	1 5/8	2.44	2 9/16	1 5/16			
×235	69.3	31.3	31 1/4	0.830	13/16	7/16	15.1	15	1.50	1 1/2	2.29	2 3/8	1 1/4			
×211	62.3	30.9	31	0.775	3/4	3/8	15.1	15 1/8	1.32	1 5/16	2.10	2 1/4	1 3/16			
×191[c]	56.1	30.7	30 5/8	0.710	11/16	3/8	15.0	15	1.19	1 3/16	1.97	2 1/16	1 3/16			
×173[c]	50.9	30.4	30 1/2	0.655	5/8	5/16	15.0	15	1.07	1 1/16	1.85	2	1 1/8			
W30×148[c]	43.6	30.7	30 5/8	0.650	5/8	5/16	10.5	10 1/2	1.18	1 3/16	1.83	2 1/16	1 1/8	26 1/2		5 1/2
×132[c]	38.8	30.3	30 1/4	0.615	5/8	5/16	10.5	10 1/2	1.00	1	1.65	1 7/8	1 1/8			
×124[c]	36.5	30.2	30 1/8	0.585	9/16	5/16	10.5	10 1/2	0.930	15/16	1.58	1 13/16	1 1/8			
×116[c]	34.2	30.0	30	0.565	9/16	5/16	10.5	10 1/2	0.850	7/8	1.50	1 3/4	1 1/8			
×108[c]	31.7	29.8	29 7/8	0.545	9/16	5/16	10.5	10 1/2	0.760	3/4	1.41	1 11/16	1 1/8			
×99[c]	29.0	29.7	29 5/8	0.520	1/2	1/4	10.5	10 1/2	0.670	11/16	1.32	1 9/16	1 1/16			
×90[c,v]	26.3	29.5	29 1/2	0.470	1/2	1/4	10.4	10 3/8	0.610	5/8	1.26	1 1/2	1 1/16			
W27×539[h]	159	32.5	32 1/2	1.97	2	1	15.3	15 1/4	3.54	3 9/16	4.33	4 7/16	1 13/16	23 5/8		5 1/2[g]
×368[h]	109	30.4	30 3/8	1.38	1 3/8	11/16	14.7	14 5/8	2.48	2 1/2	3.27	3 3/8	1 1/2			5 1/2
×336[h]	99.2	30.0	30	1.26	1 1/4	5/8	14.6	14 1/2	2.28	2 1/4	3.07	3 3/16	1 7/16			
×307[h]	90.2	29.6	29 5/8	1.16	1 3/16	5/8	14.4	14 1/2	2.09	2 1/16	2.88	3	1 7/16			
×281	83.1	29.3	29 1/4	1.06	1 1/16	9/16	14.4	14 3/8	1.93	1 15/16	2.72	2 13/16	1 3/8			
×258	76.1	29.0	29	0.980	1	1/2	14.3	14 1/4	1.77	1 3/4	2.56	2 11/16	1 5/16			
×235	69.4	28.7	28 5/8	0.910	15/16	1/2	14.2	14 1/4	1.61	1 5/8	2.40	2 1/2	1 5/16			
×217	63.9	28.4	28 3/8	0.830	13/16	7/16	14.1	14 1/8	1.50	1 1/2	2.29	2 3/8	1 1/4			
×194	57.1	28.1	28 1/8	0.750	3/4	3/8	14.0	14	1.34	1 5/16	2.13	2 1/4	1 3/16			
×178	52.5	27.8	27 3/4	0.725	3/4	3/8	14.1	14 1/8	1.19	1 3/16	1.98	2 1/16	1 3/16			
×161[c]	47.6	27.6	27 5/8	0.660	11/16	3/8	14.0	14	1.08	1 1/16	1.87	2	1 3/16			
×146[c]	43.2	27.4	27 3/8	0.605	5/8	5/16	14.0	14	0.975	1	1.76	1 7/8	1 1/8			
W27×129[c]	37.8	27.6	27 5/8	0.610	5/8	5/16	10.0	10	1.10	1 1/8	1.70	2	1 1/8	23 5/8		5 1/2
×114[c]	33.6	27.3	27 1/4	0.570	9/16	5/16	10.1	10 1/8	0.930	15/16	1.53	1 13/16	1 1/8			
×102[c]	30.0	27.1	27 1/8	0.515	1/2	1/4	10.0	10	0.830	13/16	1.43	1 3/4	1 1/16			
×94[c]	27.6	26.9	26 7/8	0.490	1/2	1/4	10.0	10	0.745	3/4	1.34	1 5/8	1 1/16			
×84[c]	24.7	26.7	26 3/4	0.460	7/16	1/4	10.0	10	0.640	5/8	1.24	1 9/16	1 1/16			

[c] Shape is slender for compression with $F_y = 50$ ksi.
[g] The actual size, combination and orientation of fastener components should be compared with the geometry of the cross section to ensure compatibility.
[h] Flange thickness greater than 2 in. Special requirements may apply per AISC *Specification* Section A3.1c.
[v] Shape does not meet the h/t_w limit for shear in AISC *Specification* Section G2.1(a) with $F_y = 50$ ksi.

Table 1-1 (continued)
W-Shapes
Properties

W30-W27

Nominal Wt.	Compact Section Criteria		Axis X-X				Axis Y-Y				r_{ts}	h_o	Torsional Properties	
	$\frac{b_f}{2t_f}$	$\frac{h}{t_w}$	I	S	r	Z	I	S	r	Z			J	C_w
lb/ft			in.^{4}	in.^{3}	in.	in.^{3}	in.^{4}	in.^{3}	in.	in.^{3}	in.	in.	in.^{4}	in.^{6}
391	3.19	19.7	20700	1250	13.4	1450	1550	198	3.67	310	4.37	30.8	173	366000
357	3.45	21.6	18700	1140	13.3	1320	1390	179	3.64	279	4.31	30.6	134	324000
326	3.75	23.4	16800	1040	13.2	1190	1240	162	3.60	252	4.26	30.4	103	287000
292	4.12	26.2	14900	930	13.2	1060	1100	144	3.58	223	4.22	30.2	75.2	250000
261	4.59	28.7	13100	829	13.1	943	959	127	3.53	196	4.16	30.0	54.1	215000
235	5.02	32.2	11700	748	13.0	847	855	114	3.51	175	4.13	29.8	40.3	190000
211	5.74	34.5	10300	665	12.9	751	757	100	3.49	155	4.11	29.6	28.4	166000
191	6.35	37.7	9200	600	12.8	675	673	89.5	3.46	138	4.06	29.5	21.0	146000
173	7.04	40.8	8230	541	12.7	607	598	79.8	3.42	123	4.03	29.3	15.6	129000
148	4.44	41.6	6680	436	12.4	500	227	43.3	2.28	68.0	2.77	29.5	14.5	49400
132	5.27	43.9	5770	380	12.2	437	196	37.2	2.25	58.4	2.75	29.3	9.72	42100
124	5.65	46.2	5360	355	12.1	408	181	34.4	2.23	54.0	2.73	29.3	7.99	38600
116	6.17	47.8	4930	329	12.0	378	164	31.3	2.19	49.2	2.70	29.2	6.43	34900
108	6.89	49.6	4470	299	11.9	346	146	27.9	2.15	43.9	2.67	29.0	4.99	30900
99	7.80	51.9	3990	269	11.7	312	128	24.5	2.10	38.6	2.62	29.0	3.77	26800
90	8.52	57.5	3610	245	11.7	283	115	22.1	2.09	34.7	2.60	28.9	2.84	24000
539	2.15	12.1	25600	1570	12.7	1890	2110	277	3.65	437	4.41	29.0	496	443000
368	2.96	17.3	16200	1060	12.2	1240	1310	179	3.48	279	4.15	27.9	170	255000
336	3.19	18.9	14600	972	12.1	1130	1180	162	3.45	252	4.10	27.7	131	226000
307	3.46	20.6	13100	887	12.0	1030	1050	146	3.41	227	4.04	27.5	101	199000
281	3.72	22.5	11900	814	12.0	936	953	133	3.39	206	4.00	27.4	79.5	178000
258	4.03	24.4	10800	745	11.9	852	859	120	3.36	187	3.96	27.2	61.6	159000
235	4.41	26.2	9700	677	11.8	772	769	108	3.33	168	3.92	27.1	47.0	141000
217	4.71	28.7	8910	627	11.8	711	704	100	3.32	154	3.89	26.9	37.6	128000
194	5.24	31.8	7860	559	11.7	631	619	88.1	3.29	136	3.85	26.8	27.1	111000
178	5.92	32.9	7020	505	11.6	570	555	78.8	3.25	122	3.83	26.6	20.1	98400
161	6.49	36.1	6310	458	11.5	515	497	70.9	3.23	109	3.79	26.5	15.1	87300
146	7.16	39.4	5660	414	11.5	464	443	63.5	3.20	97.7	3.76	26.4	11.3	77200
129	4.55	39.7	4760	345	11.2	395	184	36.8	2.21	57.6	2.66	26.5	11.1	32500
114	5.41	42.5	4080	299	11.0	343	159	31.5	2.18	49.3	2.65	26.4	7.33	27600
102	6.03	47.1	3620	267	11.0	305	139	27.8	2.15	43.4	2.62	26.3	5.28	24000
94	6.70	49.5	3270	243	10.9	278	124	24.8	2.12	38.8	2.59	26.2	4.03	21300
84	7.78	52.7	2850	213	10.7	244	106	21.2	2.07	33.2	2.54	26.1	2.81	17900

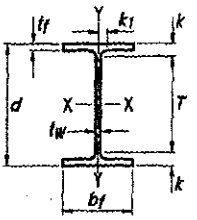

Table 1-1 (continued)
W-Shapes
Dimensions

Shape	Area, A	Depth, d		Web			Flange				Distance					Work-able Gage
				Thickness, t_w		$\frac{t_w}{2}$	Width, b_f		Thickness, t_f		k		k_1	T		
											k_{des}	k_{det}				
	in.^{2}	in.		in.		in.	in.		in.		in.	in.	in.	in.		in.
W24×370[h]	109	28.0	28	1.52	1 1/2	3/4	13.7	13 5/8	2.72	2 3/4	3.22	3 5/8	1 9/16	20 3/4		5 1/2
×335[h]	98.3	27.5	27 1/2	1.38	1 3/8	11/16	13.5	13 1/2	2.48	2 1/2	2.98	3 3/8	1 1/2			
×306[h]	89.7	27.1	27 1/8	1.26	1 1/4	5/8	13.4	13 3/8	2.28	2 1/4	2.78	3 3/16	1 7/16			
×279[h]	81.9	26.7	26 3/4	1.16	1 3/16	5/8	13.3	13 1/4	2.09	2 1/16	2.59	3	1 7/16			
×250	73.5	26.3	26 3/8	1.04	1 1/16	9/16	13.2	13 1/8	1.89	1 7/8	2.39	2 13/16	1 3/8			
×229	67.2	26.0	26	0.960	15/16	1/2	13.1	13 1/8	1.73	1 3/4	2.23	2 5/8	1 5/16			
×207	60.7	25.7	25 3/4	0.870	7/8	7/16	13.0	13	1.57	1 9/16	2.07	2 1/2	1 1/4			
×192	56.5	25.5	25 1/2	0.810	13/16	7/16	13.0	13	1.46	1 7/16	1.96	2 3/8	1 1/4			
×176	51.7	25.2	25 1/4	0.750	3/4	3/8	12.9	12 7/8	1.34	1 5/16	1.84	2 1/4	1 3/16			
×162	47.8	25.0	25	0.705	11/16	3/8	13.0	13	1.22	1 1/4	1.72	2 1/8	1 3/16			
×146	43.0	24.7	24 3/4	0.650	5/8	5/16	12.9	12 7/8	1.09	1 1/16	1.59	2	1 1/8			
×131	38.6	24.5	24 1/2	0.605	5/8	5/16	12.9	12 7/8	0.960	15/16	1.46	1 7/8	1 1/8			
×117[c]	34.4	24.3	24 1/4	0.550	9/16	5/16	12.8	12 3/4	0.850	7/8	1.35	1 3/4	1 1/8			
×104[c]	30.7	24.1	24	0.500	1/2	1/4	12.8	12 3/4	0.750	3/4	1.25	1 5/8	1 1/16			
W24×103[c]	30.3	24.5	24 1/2	0.550	9/16	5/16	9.00	9	0.980	1	1.48	1 7/8	1 1/8	20 3/4		5 1/2
×94[c]	27.7	24.3	24 1/4	0.515	1/2	1/4	9.07	9 1/8	0.875	7/8	1.38	1 3/4	1 1/16			
×84[c]	24.7	24.1	24 1/8	0.470	1/2	1/4	9.02	9	0.770	3/4	1.27	1 11/16	1 1/16			
×76[c]	22.4	23.9	23 7/8	0.440	7/16	1/4	8.99	9	0.680	11/16	1.18	1 9/16	1 1/16			
×68[c]	20.1	23.7	23 3/4	0.415	7/16	1/4	8.97	9	0.585	9/16	1.09	1 1/2	1 1/16			
W24×62[c]	18.2	23.7	23 3/4	0.430	7/16	1/4	7.04	7	0.590	9/16	1.09	1 1/2	1 1/16	20 3/4		3 1/2[g]
×55[c,v]	16.2	23.6	23 5/8	0.395	3/8	3/16	7.01	7	0.505	1/2	1.01	1 7/16	1	20 3/4		3 1/2[g]
W21×201	59.3	23.0	23	0.910	15/16	1/2	12.6	12 5/8	1.63	1 5/8	2.13	2 1/2	1 5/16	18		5 1/2
×182	53.6	22.7	22 3/4	0.830	13/16	7/16	12.5	12 1/2	1.48	1 1/2	1.98	2 3/8	1 1/4			
×166	48.8	22.5	22 1/2	0.750	3/4	3/8	12.4	12 3/8	1.36	1 3/8	1.86	2 1/4	1 3/16			
×147	43.2	22.1	22	0.720	3/4	3/8	12.5	12 1/2	1.15	1 1/8	1.65	2	1 3/16			
×132	38.8	21.8	21 7/8	0.650	5/8	5/16	12.4	12 1/2	1.04	1 1/16	1.54	1 15/16	1 1/8			
×122	35.9	21.7	21 5/8	0.600	5/8	5/16	12.4	12 3/8	0.960	15/16	1.46	1 13/16	1 1/8			
×111	32.6	21.5	21 1/2	0.550	9/16	5/16	12.3	12 3/8	0.875	7/8	1.38	1 3/4	1 1/8			
×101[c]	29.8	21.4	21 3/8	0.500	1/2	1/4	12.3	12 1/4	0.800	13/16	1.30	1 11/16	1 1/16			

[c] Shape is slender for compression with $F_y = 50$ ksi.
[g] The actual size, combination and orientation of fastener components should be compared with the geometry of the cross section to ensure compatibility.
[h] Flange thickness greater than 2 in. Special requirements may apply per AISC *Specification* Section A3.1c.
[v] Shape does not meet the h/t_w limit for shear in AISC *Specification* Section G2.1(a) with $F_y = 50$ ksi.

Table 1-1 (continued)
W-Shapes
Properties

W24-W21

Nominal Wt.	Compact Section Criteria		Axis X-X				Axis Y-Y				r_{ts}	h_o	Torsional Properties	
	$\frac{b_f}{2t_f}$	$\frac{h}{t_w}$	I	S	r	Z	I	S	r	Z			J	C_w
lb/ft			in.^{4}	in.^{3}	in.	in.^{3}	in.^{4}	in.^{3}	in.	in.^{3}	in.	in.	in.^{4}	in.^{6}
370	2.51	14.2	13400	957	11.1	1130	1160	170	3.27	267	3.92	25.3	201	186000
335	2.73	15.6	11900	864	11.0	1020	1030	152	3.23	238	3.86	25.0	152	161000
306	2.94	17.1	10700	789	10.9	922	919	137	3.20	214	3.81	24.8	117	142000
279	3.18	18.6	9600	718	10.8	835	823	124	3.17	193	3.76	24.6	90.5	125000
250	3.49	20.7	8490	644	10.7	744	724	110	3.14	171	3.71	24.4	66.6	108000
229	3.79	22.5	7650	588	10.7	675	651	99.4	3.11	154	3.67	24.3	51.3	96100
207	4.14	24.8	6820	531	10.6	606	578	88.8	3.08	137	3.62	24.1	38.3	84100
192	4.43	26.6	6260	491	10.5	559	530	81.8	3.07	126	3.60	24.0	30.8	76300
176	4.81	28.7	5680	450	10.5	511	479	74.3	3.04	115	3.57	23.9	23.9	68400
162	5.31	30.6	5170	414	10.4	468	443	68.4	3.05	105	3.57	23.8	18.5	62600
146	5.92	33.2	4580	371	10.3	418	391	60.5	3.01	93.2	3.53	23.6	13.4	54600
131	6.70	35.6	4020	329	10.2	370	340	53.0	2.97	81.5	3.49	23.5	9.50	47100
117	7.53	39.2	3540	291	10.1	327	297	46.5	2.94	71.4	3.46	23.5	6.72	40800
104	8.50	43.1	3100	258	10.1	289	259	40.7	2.91	62.4	3.42	23.4	4.72	35200
103	4.59	39.2	3000	245	10.0	280	119	26.5	1.99	41.5	2.40	23.5	7.07	16600
94	5.18	41.9	2700	222	9.87	254	109	24.0	1.98	37.5	2.40	23.4	5.26	15000
84	5.86	45.9	2370	196	9.79	224	94.4	20.9	1.95	32.6	2.37	23.3	3.70	12800
76	6.61	49.0	2100	176	9.69	200	82.5	18.4	1.92	28.6	2.33	23.2	2.68	11100
68	7.66	52.0	1830	154	9.55	177	70.4	15.7	1.87	24.5	2.30	23.1	1.87	9430
62	5.97	50.1	1550	131	9.23	153	34.5	9.80	1.38	15.7	1.75	23.1	1.71	4620
55	6.94	54.6	1350	114	9.11	134	29.1	8.30	1.34	13.3	1.72	23.1	1.18	3870
201	3.86	20.6	5310	461	9.47	530	542	86.1	3.02	133	3.55	21.4	40.9	62000
182	4.22	22.6	4730	417	9.40	476	483	77.2	3.00	119	3.51	21.2	30.7	54400
166	4.57	25.0	4280	380	9.36	432	435	70.0	2.99	108	3.48	21.1	23.6	48500
147	5.44	26.1	3630	329	9.17	373	376	60.1	2.95	92.6	3.46	21.0	15.4	41100
132	6.01	28.9	3220	295	9.12	333	333	53.5	2.93	82.3	3.43	20.8	11.3	36000
122	6.45	31.3	2960	273	9.09	307	305	49.2	2.92	75.6	3.40	20.7	8.98	32700
111	7.05	34.1	2670	249	9.05	279	274	44.5	2.90	68.2	3.37	20.6	6.83	29200
101	7.68	37.5	2420	227	9.02	253	248	40.3	2.89	61.7	3.35	20.6	5.21	26200

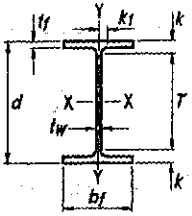

Table 1-1 (continued)
W-Shapes
Dimensions

Shape	Area, A	Depth, d	Web		Flange			Distance					Workable Gage
			Thickness, t_w	$\frac{t_w}{2}$	Width, b_f		Thickness, t_f	k		k_1	T		
								k_{des}	k_{det}				
	in.²	in.	in.	in.	in.		in.	in.	in.	in.	in.		in.
W21×93	27.3	21.6	21 5/8	0.580	9/16	5/16	8.42	8 3/8	0.930	15/16	1.43	1 5/8	15/16	18 3/8	5 1/2
×83[c]	24.4	21.4	21 3/8	0.515	1/2	1/4	8.36	8 3/8	0.835	13/16	1.34	1 1/2	7/8		
×73[c]	21.5	21.2	21 1/4	0.455	7/16	1/4	8.30	8 1/4	0.740	3/4	1.24	1 7/16	7/8		
×68[c]	20.0	21.1	21 1/8	0.430	7/16	1/4	8.27	8 1/4	0.685	11/16	1.19	1 3/8	7/8		
×62[c]	18.3	21.0	21	0.400	3/8	3/16	8.24	8 1/4	0.615	5/8	1.12	1 5/16	13/16		
×55[c]	16.2	20.8	20 3/4	0.375	3/8	3/16	8.22	8 1/4	0.522	1/2	1.02	1 3/16	13/16		
×48[c,f]	14.1	20.6	20 5/8	0.350	3/8	3/16	8.14	8 1/8	0.430	7/16	0.930	1 1/8	13/16		
W21×57[c]	16.7	21.1	21	0.405	3/8	3/16	6.56	6 1/2	0.650	5/8	1.15	1 5/16	13/16	18 3/8	3 1/2
×50[c]	14.7	20.8	20 7/8	0.380	3/8	3/16	6.53	6 1/2	0.535	9/16	1.04	1 1/4	13/16		
×44[c]	13.0	20.7	20 5/8	0.350	3/8	3/16	6.50	6 1/2	0.450	7/16	0.950	1 1/8	13/16		
W18×311[h]	91.6	22.3	22 3/8	1.52	1 1/2	3/4	12.0	12	2.74	2 3/4	3.24	3 7/16	1 3/8	15 1/2	5 1/2
×283[h]	83.3	21.9	21 7/8	1.40	1 3/8	11/16	11.9	11 7/8	2.50	2 1/2	3.00	3 3/16	1 5/16		
×258[h]	76.0	21.5	21 1/2	1.28	1 1/4	5/8	11.8	11 3/4	2.30	2 5/16	2.70	3	1 1/4		
×234[h]	68.6	21.1	21	1.16	1 3/16	5/8	11.7	11 5/8	2.11	2 1/8	2.51	2 3/4	1 3/16		
×211	62.3	20.7	20 5/8	1.06	1 1/16	9/16	11.6	11 1/2	1.91	1 15/16	2.31	2 9/16	1 3/16		
×192	56.2	20.4	20 3/8	0.960	15/16	1/2	11.5	11 1/2	1.75	1 3/4	2.15	2 7/16	1 1/8		
×175	51.4	20.0	20	0.890	7/8	7/16	11.4	11 3/8	1.59	1 9/16	1.99	2 7/16	1 1/4	15 1/8	
×158	46.3	19.7	19 3/4	0.810	13/16	7/16	11.3	11 1/4	1.44	1 7/16	1.84	2 3/8	1 1/4		
×143	42.0	19.5	19 1/2	0.730	3/4	3/8	11.2	11 1/4	1.32	1 5/16	1.72	2 3/16	1 3/16		
×130	38.3	19.3	19 1/4	0.670	11/16	3/8	11.2	11 1/8	1.20	1 3/16	1.60	2 1/16	1 3/16		
×119	35.1	19.0	19	0.655	5/8	5/16	11.3	11 1/4	1.06	1 1/16	1.46	1 15/16	1 3/16		
×106	31.1	18.7	18 3/4	0.590	9/16	5/16	11.2	11 1/4	0.940	15/16	1.34	1 13/16	1 1/8		
×97	28.5	18.6	18 5/8	0.535	9/16	5/16	11.1	11 1/8	0.870	7/8	1.27	1 3/4	1 1/8		
×86	25.3	18.4	18 3/8	0.480	1/2	1/4	11.1	11 1/8	0.770	3/4	1.17	1 5/8	1 1/16		
×76[c]	22.3	18.2	18 1/4	0.425	7/16	1/4	11.0	11	0.680	11/16	1.08	1 9/16	1 1/16		
W18×71	20.9	18.5	18 1/2	0.495	1/2	1/4	7.64	7 5/8	0.810	13/16	1.21	1 1/2	7/8	15 1/2	3 1/2[g]
×65	19.1	18.4	18 3/8	0.450	7/16	1/4	7.59	7 5/8	0.750	3/4	1.15	1 7/16	7/8		
×60[c]	17.6	18.2	18 1/4	0.415	7/16	1/4	7.56	7 1/2	0.695	11/16	1.10	1 3/8	13/16		
×55[c]	16.2	18.1	18 1/8	0.390	3/8	3/16	7.53	7 1/2	0.630	5/8	1.03	1 5/16	13/16		
×50[c]	14.7	18.0	18	0.355	3/8	3/16	7.50	7 1/2	0.570	9/16	0.972	1 1/4	13/16		
W18×46[c]	13.5	18.1	18	0.360	3/8	3/16	6.06	6	0.605	5/8	1.01	1 1/4	13/16	15 1/2	3 1/2[g]
×40[c]	11.8	17.9	17 7/8	0.315	5/16	3/16	6.02	6	0.525	1/2	0.927	1 3/16	13/16		
×35[c]	10.3	17.7	17 3/4	0.300	5/16	3/16	6.00	6	0.425	7/16	0.827	1 1/8	3/4		

[c] Shape is slender for compression with $F_y = 50$ ksi.
[f] Shape exceeds compact limit for flexure with $F_y = 50$ ksi.
[g] The actual size, combination and orientation of fastener components should be compared with the geometry of the cross section to ensure compatibility.
[h] Flange thickness greater than 2 in. Special requirements may apply per AISC *Specification* Section A3.1c.

Table 1-1 (continued)
W-Shapes
Properties

W21–W18

Nominal Wt.	Compact Section Criteria		Axis X-X				Axis Y-Y				r_{ts}	h_o	Torsional Properties	
	$\frac{b_f}{2t_f}$	$\frac{h}{t_w}$	I	S	r	Z	I	S	r	Z			J	C_w
lb/ft			in.^{4}	in.^{3}	in.	in.^{3}	in.^{4}	in.^{3}	in.	in.^{3}	in.	in.	in.^{4}	in.^{6}
93	4.53	32.3	2070	192	8.70	221	92.9	22.1	1.84	34.7	2.24	20.7	6.03	9940
83	5.00	36.4	1830	171	8.67	196	81.4	19.5	1.83	30.5	2.21	20.6	4.34	8630
73	5.60	41.2	1600	151	8.64	172	70.6	17.0	1.81	26.6	2.19	20.5	3.02	7410
68	6.04	43.6	1480	140	8.60	160	64.7	15.7	1.80	24.4	2.17	20.4	2.45	6760
62	6.70	46.9	1330	127	8.54	144	57.5	14.0	1.77	21.7	2.15	20.4	1.83	5960
55	7.87	50.0	1140	110	8.40	126	48.4	11.8	1.73	18.4	2.11	20.3	1.24	4980
48	9.47	53.6	959	93.0	8.24	107	38.7	9.52	1.66	14.9	2.05	20.2	0.803	3950
57	5.04	46.3	1170	111	8.36	129	30.6	9.35	1.35	14.8	1.68	20.5	1.77	3190
50	6.10	49.4	984	94.5	8.18	110	24.9	7.64	1.30	12.2	1.64	20.3	1.14	2570
44	7.22	53.6	843	81.6	8.06	95.4	20.7	6.37	1.26	10.2	1.60	20.3	0.770	2110
311	2.19	10.4	6970	624	8.72	754	795	132	2.95	207	3.53	19.6	176	76200
283	2.38	11.3	6170	565	8.61	676	704	118	2.91	185	3.47	19.4	134	65900
258	2.56	12.5	5510	514	8.53	611	628	107	2.88	166	3.42	19.2	103	57600
234	2.76	13.8	4900	466	8.44	549	558	95.8	2.85	149	3.37	19.0	78.7	50100
211	3.02	15.1	4330	419	8.35	490	493	85.3	2.82	132	3.32	18.8	58.6	43400
192	3.27	16.7	3870	380	8.28	442	440	76.8	2.79	119	3.28	18.7	44.7	38000
175	3.58	18.0	3450	344	8.20	398	391	68.8	2.76	106	3.24	18.4	33.8	33300
158	3.92	19.8	3060	310	8.12	356	347	61.4	2.74	94.8	3.20	18.3	25.2	29000
143	4.25	22.0	2750	282	8.09	322	311	55.5	2.72	85.4	3.17	18.2	19.2	25700
130	4.65	23.9	2460	256	8.03	290	278	49.9	2.70	76.7	3.13	18.1	14.5	22700
119	5.31	24.5	2190	231	7.90	262	253	44.9	2.69	69.1	3.13	17.9	10.6	20300
106	5.96	27.2	1910	204	7.84	230	220	39.4	2.66	60.5	3.10	17.8	7.48	17400
97	6.41	30.0	1750	188	7.82	211	201	36.1	2.65	55.3	3.08	17.7	5.86	15800
86	7.20	33.4	1530	166	7.77	186	175	31.6	2.63	48.4	3.05	17.6	4.10	13600
76	8.11	37.8	1330	146	7.73	163	152	27.6	2.61	42.2	3.02	17.5	2.83	11700
71	4.71	32.4	1170	127	7.50	146	60.3	15.8	1.70	24.7	2.05	17.7	3.49	4700
65	5.06	35.7	1070	117	7.49	133	54.8	14.4	1.69	22.5	2.03	17.7	2.73	4240
60	5.44	38.7	984	108	7.47	123	50.1	13.3	1.68	20.6	2.02	17.5	2.17	3850
55	5.98	41.1	890	98.3	7.41	112	44.9	11.9	1.67	18.5	2.00	17.5	1.66	3430
50	6.57	45.2	800	88.9	7.38	101	40.1	10.7	1.65	16.6	1.98	17.4	1.24	3040
46	5.01	44.6	712	78.8	7.25	90.7	22.5	7.43	1.29	11.7	1.58	17.5	1.22	1720
40	5.73	50.9	612	68.4	7.21	78.4	19.1	6.35	1.27	10.0	1.56	17.4	0.810	1440
35	7.06	53.5	510	57.6	7.04	66.5	15.3	5.12	1.22	8.06	1.51	17.3	0.506	1140

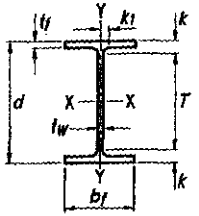

Table 1-1 (continued)
W-Shapes
Dimensions

Shape	Area, A	Depth, d		Web		Flange				Distance				Work-able Gage
				Thickness, t_w	$\frac{t_w}{2}$	Width, b_f		Thickness, t_f		k		k_1	T	
										k_{des}	k_{det}			
	in.^{2}	in.		in.		in.		in.		in.	in.	in.	in.	in.
W16×100	29.4	17.0	17	0.585	9/16	5/16	10.4	10 3/8	0.985	1	1.39	1 7/8	1 1/8	13 1/4	5 1/2
×89	26.2	16.8	16 3/4	0.525	1/2	1/4	10.4	10 3/8	0.875	7/8	1.28	1 3/4	1 1/16		
×77	22.6	16.5	16 1/2	0.455	7/16	1/4	10.3	10 1/4	0.760	3/4	1.16	1 5/8	1 1/16		
×67[c]	19.6	16.3	16 3/8	0.395	3/8	3/16	10.2	10 1/4	0.665	11/16	1.07	1 9/16	1		
W16×57	16.8	16.4	16 3/8	0.430	7/16	1/4	7.12	7 1/8	0.715	11/16	1.12	1 3/8	7/8	13 5/8	3 1/2[g]
×50[c]	14.7	16.3	16 1/4	0.380	3/8	3/16	7.07	7 1/8	0.630	5/8	1.03	1 5/16	13/16		
×45[c]	13.3	16.1	16 1/8	0.345	3/8	3/16	7.04	7	0.565	9/16	0.967	1 1/4	13/16		
×40[c]	11.8	16.0	16	0.305	5/16	3/16	7.00	7	0.505	1/2	0.907	1 3/16	13/16		
×36[c]	10.6	15.9	15 7/8	0.295	5/16	3/16	6.99	7	0.430	7/16	0.832	1 1/8	3/4		
W16×31[c]	9.13	15.9	15 7/8	0.275	1/4	1/8	5.53	5 1/2	0.440	7/16	0.842	1 1/8	3/4	13 5/8	3 1/2
×26[c,v]	7.68	15.7	15 3/4	0.250	1/4	1/8	5.50	5 1/2	0.345	3/8	0.747	1 1/16	3/4	13 5/8	3 1/2
W14×730[h]	215	22.4	22 3/8	3.07	3 1/16	1 9/16	17.9	17 7/8	4.91	4 15/16	5.51	6 3/16	2 3/4	10	3-7 1/2-3[g]
×665[h]	196	21.6	21 5/8	2.83	2 13/16	1 7/16	17.7	17 5/8	4.52	4 1/2	5.12	5 13/16	2 5/8		3-7 1/2-3[g]
×605[h]	178	20.9	20 7/8	2.60	2 5/8	1 5/16	17.4	17 3/8	4.16	4 3/16	4.76	5 7/16	2 1/2		3-7 1/2-3
×550[h]	162	20.2	20 1/4	2.38	2 3/8	1 3/16	17.2	17 1/4	3.82	3 13/16	4.42	5 1/8	2 3/8		
×500[h]	147	19.6	19 5/8	2.19	2 3/16	1 1/8	17.0	17	3.50	3 1/2	4.10	4 13/16	2 5/16		
×455[h]	134	19.0	19	2.02	2	1	16.8	16 7/8	3.21	3 3/16	3.81	4 1/2	2 1/4		
×426[h]	125	18.7	18 5/8	1.88	1 7/8	15/16	16.7	16 3/4	3.04	3 1/16	3.63	4 5/16	2 1/8		
×398[h]	117	18.3	18 1/4	1.77	1 3/4	7/8	16.6	16 5/8	2.85	2 7/8	3.44	4 1/8	2 1/8		
×370[h]	109	17.9	17 7/8	1.66	1 11/16	13/16	16.5	16 1/2	2.66	2 11/16	3.26	3 15/16	2 1/16		
×342[h]	101	17.5	17 1/2	1.54	1 9/16	13/16	16.4	16 3/8	2.47	2 1/2	3.07	3 3/4	2		
×311[h]	91.4	17.1	17 1/8	1.41	1 7/16	3/4	16.2	16 1/4	2.26	2 1/4	2.86	3 9/16	1 15/16		
×283[h]	83.3	16.7	16 3/4	1.29	1 5/16	11/16	16.1	16 1/8	2.07	2 1/16	2.67	3 3/8	1 7/8		
×257	75.6	16.4	16 3/8	1.18	1 3/16	5/8	16.0	16	1.89	1 7/8	2.49	3 3/16	1 13/16		
×233	68.5	16.0	16	1.07	1 1/16	9/16	15.9	15 7/8	1.72	1 3/4	2.32	3	1 3/4		
×211	62.0	15.7	15 3/4	0.980	1	1/2	15.8	15 3/4	1.56	1 9/16	2.16	2 7/8	1 11/16		
×193	56.8	15.5	15 1/2	0.890	7/8	7/16	15.7	15 3/4	1.44	1 7/16	2.04	2 3/4	1 11/16		
×176	51.8	15.2	15 1/4	0.830	13/16	7/16	15.7	15 5/8	1.31	1 5/16	1.91	2 5/8	1 5/8		
×159	46.7	15.0	15	0.745	3/4	3/8	15.6	15 5/8	1.19	1 3/16	1.79	2 1/2	1 9/16		
×145	42.7	14.8	14 3/4	0.680	11/16	3/8	15.5	15 1/2	1.09	1 1/16	1.69	2 3/8	1 9/16		

[c] Shape is slender for compression with $F_y = 50$ ksi.
[g] The actual size, combination and orientation of fastener components should be compared with the geometry of the cross section to ensure compatibility.
[h] Flange thickness greater than 2 in. Special requirements may apply per AISC *Specification* Section A3.1c.
[v] Shape does not meet the h/t_w limit for shear in AISC *Specification* Section G2.1(a) with $F_y = 50$ ksi.

Table 1-1 (continued)
W-Shapes
Properties

W16-W14

Nominal Wt.	Compact Section Criteria		Axis X-X				Axis Y-Y				r_{ts}	h_o	Torsional Properties	
	$\frac{b_f}{2t_f}$	$\frac{h}{t_w}$	I	S	r	Z	I	S	r	Z			J	C_w
lb/ft			in.^{4}	in.^{3}	in.	in.^{3}	in.^{4}	in.^{3}	in.	in.^{3}	in.	in.	in.^{4}	in.^{6}
100	5.29	24.3	1490	175	7.10	198	186	35.7	2.51	54.9	2.92	16.0	7.73	11900
89	5.92	27.0	1300	155	7.05	175	163	31.4	2.49	48.1	2.88	15.9	5.45	10200
77	6.77	31.2	1110	134	7.00	150	138	26.9	2.47	41.1	2.85	15.7	3.57	8590
67	7.70	35.9	954	117	6.96	130	119	23.2	2.46	35.5	2.82	15.6	2.39	7300
57	4.98	33.0	758	92.2	6.72	105	43.1	12.1	1.60	18.9	1.92	15.7	2.22	2660
50	5.61	37.4	659	81.0	6.68	92.0	37.2	10.5	1.59	16.3	1.89	15.7	1.52	2270
45	6.23	41.1	586	72.7	6.65	82.3	32.8	9.34	1.57	14.5	1.87	15.5	1.11	1990
40	6.93	46.5	518	64.7	6.63	73.0	28.9	8.25	1.57	12.7	1.86	15.5	0.794	1730
36	8.12	48.1	448	56.5	6.51	64.0	24.5	7.00	1.52	10.8	1.83	15.5	0.545	1460
31	6.28	51.6	375	47.2	6.41	54.0	12.4	4.49	1.17	7.03	1.42	15.5	0.461	739
26	7.97	56.8	301	38.4	6.26	44.2	9.59	3.49	1.12	5.48	1.38	15.4	0.262	565
730	1.82	3.71	14300	1280	8.17	1660	4720	527	4.69	816	5.68	17.5	1450	362000
665	1.95	4.03	12400	1150	7.98	1480	4170	472	4.62	730	5.57	17.1	1120	305000
605	2.09	4.39	10800	1040	7.80	1320	3680	423	4.55	652	5.44	16.7	869	258000
550	2.25	4.79	9430	931	7.63	1180	3250	378	4.49	583	5.35	16.4	669	219000
500	2.43	5.21	8210	838	7.48	1050	2880	339	4.43	522	5.26	16.1	514	187000
455	2.62	5.66	7190	756	7.33	936	2560	304	4.38	468	5.17	15.8	395	160000
426	2.75	6.08	6600	706	7.26	869	2360	283	4.34	434	5.11	15.7	331	144000
398	2.92	6.44	6000	656	7.16	801	2170	262	4.31	402	5.05	15.5	273	129000
370	3.10	6.89	5440	607	7.07	736	1990	241	4.27	370	5.00	15.2	222	116000
342	3.31	7.41	4900	558	6.98	672	1810	221	4.24	338	4.95	15.0	178	103000
311	3.59	8.09	4330	506	6.88	603	1610	199	4.20	304	4.87	14.8	136	89100
283	3.89	8.84	3840	459	6.79	542	1440	179	4.17	274	4.80	14.6	104	77700
257	4.23	9.71	3400	415	6.71	487	1290	161	4.13	246	4.75	14.5	79.1	67800
233	4.62	10.7	3010	375	6.63	436	1150	145	4.10	221	4.69	14.3	59.5	59000
211	5.06	11.6	2660	338	6.55	390	1030	130	4.07	198	4.64	14.1	44.6	51500
193	5.45	12.8	2400	310	6.50	355	931	119	4.05	180	4.59	14.1	34.8	45900
176	5.97	13.7	2140	281	6.43	320	838	107	4.02	163	4.55	13.9	26.5	40500
159	6.54	15.3	1900	254	6.38	287	748	96.2	4.00	146	4.51	13.8	19.7	35600
145	7.11	16.8	1710	232	6.33	260	677	87.3	3.98	133	4.47	13.7	15.2	31700

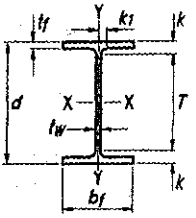

Table 1-1 (continued)
W-Shapes
Dimensions

Shape	Area, A	Depth, d	Web			Flange				Distance				
			Thickness, t_w		$\frac{t_w}{2}$	Width, b_f		Thickness, t_f		k		k_1	T	Workable Gage
										k_{des}	k_{det}			
	in.^{2}	in.	in.		in.	in.		in.		in.	in.	in.	in.	in.
W14×132	38.8	14.7	14 5/8	0.645	5/8	5/16	14.7	14 3/4	1.03	1	1.63	2 5/16	1 9/16	10	5 1/2
×120	35.3	14.5	14 1/2	0.590	9/16	5/16	14.7	14 5/8	0.940	15/16	1.54	2 1/4	1 1/2		
×109	32.0	14.3	14 3/8	0.525	1/2	1/4	14.6	14 5/8	0.860	7/8	1.46	2 3/16	1 1/2		
×99[f]	29.1	14.2	14 1/8	0.485	1/2	1/4	14.6	14 5/8	0.780	3/4	1.38	2 1/16	1 7/16		
×90[f]	26.5	14.0	14	0.440	7/16	1/4	14.5	14 1/2	0.710	11/16	1.31	2	1 7/16		
W14×82	24.0	14.3	14 1/4	0.510	1/2	1/4	10.1	10 1/8	0.855	7/8	1.45	1 11/16	1 1/16	10 7/8	5 1/2
×74	21.8	14.2	14 1/8	0.450	7/16	1/4	10.1	10 1/8	0.785	13/16	1.38	1 5/8	1 1/16		
×68	20.0	14.0	14	0.415	7/16	1/4	10.0	10	0.720	3/4	1.31	1 9/16	1 1/16		
×61	17.9	13.9	13 7/8	0.375	3/8	3/16	10.0	10	0.645	5/8	1.24	1 1/2	1		
W14×53	15.6	13.9	13 7/8	0.370	3/8	3/16	8.06	8	0.660	11/16	1.25	1 1/2	1	10 7/8	5 1/2
×48	14.1	13.8	13 3/4	0.340	5/16	3/16	8.03	8	0.595	5/8	1.19	1 7/16	1		
×43[c]	12.6	13.7	13 5/8	0.305	5/16	3/16	8.00	8	0.530	1/2	1.12	1 3/8	1		
W14×38[c]	11.2	14.1	14 1/8	0.310	5/16	3/16	6.77	6 3/4	0.515	1/2	0.915	1 1/4	13/16	11 5/8	3 1/2[g]
×34[c]	10.0	14.0	14	0.285	5/16	3/16	6.75	6 3/4	0.455	7/16	0.855	1 3/16	3/4		3 1/2
×30[c]	8.85	13.8	13 7/8	0.270	1/4	1/8	6.73	6 3/4	0.385	3/8	0.785	1 1/8	3/4		3 1/2
W14×26[c]	7.69	13.9	13 7/8	0.255	1/4	1/8	5.03	5	0.420	7/16	0.820	1 1/8	3/4	11 5/8	2 3/4[g]
×22[c]	6.49	13.7	13 3/4	0.230	1/4	1/8	5.00	5	0.335	5/16	0.735	1 1/16	3/4	11 5/8	2 3/4[g]
W12×336[h]	98.9	16.8	16 7/8	1.78	1 3/4	7/8	13.4	13 3/8	2.96	2 15/16	3.55	3 7/8	1 11/16	9 1/8	5 1/2
×305[h]	89.5	16.3	16 3/8	1.63	1 5/8	13/16	13.2	13 1/4	2.71	2 11/16	3.30	3 5/8	1 5/8		
×279[h]	81.9	15.9	15 7/8	1.53	1 1/2	3/4	13.1	13 1/8	2.47	2 1/2	3.07	3 3/8	1 5/8		
×252[h]	74.1	15.4	15 3/8	1.40	1 3/8	11/16	13.0	13	2.25	2 1/4	2.85	3 1/8	1 1/2		
×230[h]	67.7	15.1	15	1.29	1 5/16	11/16	12.9	12 7/8	2.07	2 1/16	2.67	2 15/16	1 1/2		
×210	61.8	14.7	14 3/4	1.18	1 3/16	5/8	12.8	12 3/4	1.90	1 7/8	2.50	2 13/16	1 7/16		
×190	56.0	14.4	14 3/8	1.06	1 1/16	9/16	12.7	12 5/8	1.74	1 3/4	2.33	2 5/8	1 3/8		
×170	50.0	14.0	14	0.960	15/16	1/2	12.6	12 5/8	1.56	1 9/16	2.16	2 7/16	1 5/16		
×152	44.7	13.7	13 3/4	0.870	7/8	7/16	12.5	12 1/2	1.40	1 3/8	2.00	2 5/16	1 1/4		
×136	39.9	13.4	13 3/8	0.790	13/16	7/16	12.4	12 3/8	1.25	1 1/4	1.85	2 1/8	1 1/4		
×120	35.2	13.1	13 1/8	0.710	11/16	3/8	12.3	12 3/8	1.11	1 1/8	1.70	2	1 3/16		
×106	31.2	12.9	12 7/8	0.610	5/8	5/16	12.2	12 1/4	0.990	1	1.59	1 7/8	1 1/8		
×96	28.2	12.7	12 3/4	0.550	9/16	5/16	12.2	12 1/8	0.900	7/8	1.50	1 13/16	1 1/8		
×87	25.6	12.5	12 1/2	0.515	1/2	1/4	12.1	12 1/8	0.810	13/16	1.41	1 11/16	1 1/16		
×79	23.2	12.4	12 3/8	0.470	1/2	1/4	12.1	12 1/8	0.735	3/4	1.33	1 5/8	1 1/16		
×72	21.1	12.3	12 1/4	0.430	7/16	1/4	12.0	12	0.670	11/16	1.27	1 9/16	1 1/16		
×65[f]	19.1	12.1	12 1/8	0.390	3/8	3/16	12.0	12	0.605	5/8	1.20	1 1/2	1		

[c] Shape is slender for compression with $F_y = 50$ ksi.
[f] Shape exceeds compact limit for flexure with $F_y = 50$ ksi.
[g] The actual size, combination and orientation of fastener components should be compared with the geometry of the cross section to ensure compatibility.
[h] Flange thickness greater than 2 in. Special requirements may apply per AISC *Specification* Section A3.1c.

Table 1-1 (continued)
W-Shapes
Properties

W14-W12

Nominal Wt.	Compact Section Criteria		Axis X-X				Axis Y-Y				r_{ts}	h_o	Torsional Properties	
	$\frac{b_f}{2t_f}$	$\frac{h}{t_w}$	I	S	r	Z	I	S	r	Z			J	C_w
lb/ft			in.^{4}	in.^{3}	in.	in.^{3}	in.^{4}	in.^{3}	in.	in.^{3}	in.	in.	in.^{4}	in.^{6}
132	7.15	17.7	1530	209	6.28	234	548	74.5	3.76	113	4.23	13.7	12.3	25500
120	7.80	19.3	1380	190	6.24	212	495	67.5	3.74	102	4.20	13.6	9.37	22700
109	8.49	21.7	1240	173	6.22	192	447	61.2	3.73	92.7	4.17	13.4	7.12	20200
99	9.34	23.5	1110	157	6.17	173	402	55.2	3.71	83.6	4.14	13.4	5.37	18000
90	10.2	25.9	999	143	6.14	157	362	49.9	3.70	75.6	4.10	13.3	4.06	16000
82	5.92	22.4	881	123	6.06	139	148	29.3	2.48	44.8	2.85	13.4	5.07	6710
74	6.41	25.4	795	112	6.04	126	134	26.6	2.48	40.5	2.83	13.4	3.87	5990
68	6.97	27.5	722	103	6.01	115	121	24.2	2.46	36.9	2.80	13.3	3.01	5380
61	7.75	30.4	640	92.1	5.98	102	107	21.5	2.45	32.8	2.78	13.3	2.19	4710
53	6.11	30.9	541	77.8	5.89	87.1	57.7	14.3	1.92	22.0	2.22	13.2	1.94	2540
48	6.75	33.6	484	70.2	5.86	78.4	51.4	12.8	1.91	19.6	2.20	13.2	1.45	2240
43	7.54	37.4	428	62.6	5.82	69.6	45.2	11.3	1.89	17.3	2.18	13.2	1.05	1950
38	6.57	39.6	385	54.6	5.87	61.5	26.7	7.88	1.55	12.1	1.82	13.6	0.798	1230
34	7.41	43.1	340	48.6	5.83	54.6	23.3	6.91	1.53	10.6	1.80	13.5	0.569	1070
30	8.74	45.4	291	42.0	5.73	47.3	19.6	5.82	1.49	8.99	1.77	13.4	0.380	887
26	5.98	48.1	245	35.3	5.65	40.2	8.91	3.55	1.08	5.54	1.30	13.5	0.358	405
22	7.46	53.3	199	29.0	5.54	33.2	7.00	2.80	1.04	4.39	1.27	13.4	0.208	314
336	2.26	5.47	4060	483	6.41	603	1190	177	3.47	274	4.13	13.8	243	57000
305	2.45	5.98	3550	435	6.29	537	1050	159	3.42	244	4.05	13.6	185	48600
279	2.66	6.35	3110	393	6.16	481	937	143	3.38	220	4.00	13.4	143	42000
252	2.89	6.96	2720	353	6.06	428	828	127	3.34	196	3.93	13.2	108	35800
230	3.11	7.56	2420	321	5.97	386	742	115	3.31	177	3.87	13.0	83.8	31200
210	3.37	8.23	2140	292	5.89	348	664	104	3.28	159	3.81	12.8	64.7	27200
190	3.65	9.16	1890	263	5.82	311	589	93.0	3.25	143	3.77	12.7	48.8	23600
170	4.03	10.1	1650	235	5.74	275	517	82.3	3.22	126	3.70	12.4	35.6	20100
152	4.46	11.2	1430	209	5.66	243	454	72.8	3.19	111	3.66	12.3	25.8	17200
136	4.96	12.3	1240	186	5.58	214	398	64.2	3.16	98.0	3.61	12.2	18.5	14700
120	5.57	13.7	1070	163	5.51	186	345	56.0	3.13	85.4	3.56	12.0	12.9	12400
106	6.17	15.9	933	145	5.47	164	301	49.3	3.11	75.1	3.52	11.9	9.13	10700
96	6.76	17.7	833	131	5.44	147	270	44.4	3.09	67.5	3.49	11.8	6.85	9410
87	7.48	18.9	740	118	5.38	132	241	39.7	3.07	60.4	3.46	11.7	5.10	8270
79	8.22	20.7	662	107	5.34	119	216	35.8	3.05	54.3	3.43	11.7	3.84	7330
72	8.99	22.6	597	97.4	5.31	108	195	32.4	3.04	49.2	3.41	11.6	2.93	6540
65	9.92	24.9	533	87.9	5.28	96.8	174	29.1	3.02	44.1	3.38	11.5	2.18	5780

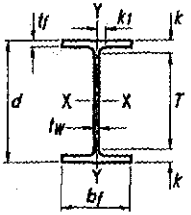

Table 1-1 (continued)
W-Shapes
Dimensions

Shape	Area, A	Depth, d		Web			Flange				Distance					Work-able Gage
				Thickness, t_w		$\frac{t_w}{2}$	Width, b_f		Thickness, t_f		k		k_1	T		
											k_{des}	k_{det}				
	in.²	in.		in.		in.	in.		in.		in.	in.	in.	in.		in.
W12×58	17.0	12.2	12 1/4	0.360	3/8	3/16	10.0	10	0.640	5/8	1.24	1 1/2	15/16	9 1/4		5 1/2
×53	15.6	12.1	12	0.345	3/8	3/16	10.0	10	0.575	9/16	1.18	1 3/8	15/16	9 1/4		5 1/2
W12×50	14.6	12.2	12 1/4	0.370	3/8	3/16	8.08	8 1/8	0.640	5/8	1.14	1 1/2	15/16	9 1/4		5 1/2
×45	13.1	12.1	12	0.335	5/16	3/16	8.05	8	0.575	9/16	1.08	1 3/8	15/16	↓		↓
×40	11.7	11.9	12	0.295	5/16	3/16	8.01	8	0.515	1/2	1.02	1 3/8	7/8	↓		↓
W12×35[c]	10.3	12.5	12 1/2	0.300	5/16	3/16	6.56	6 1/2	0.520	1/2	0.820	1 3/16	3/4	10 1/8		3 1/2
×30[c]	8.79	12.3	12 3/8	0.260	1/4	1/8	6.52	6 1/2	0.440	7/16	0.740	1 1/8	3/4	↓		↓
×26[c]	7.65	12.2	12 1/4	0.230	1/4	1/8	6.49	6 1/2	0.380	3/8	0.680	1 1/16	3/4	↓		↓
W12×22[c]	6.48	12.3	12 1/4	0.260	1/4	1/8	4.03	4	0.425	7/16	0.725	15/16	5/8	10 3/8		2 1/4[g]
×19[c]	5.57	12.2	12 1/8	0.235	1/4	1/8	4.01	4	0.350	3/8	0.650	7/8	9/16	↓		↓
×16[c]	4.71	12.0	12	0.220	1/4	1/8	3.99	4	0.265	1/4	0.565	13/16	9/16	↓		↓
×14[c,v]	4.16	11.9	11 7/8	0.200	3/16	1/8	3.97	4	0.225	1/4	0.525	3/4	9/16	↓		↓
W10×112	32.9	11.4	11 3/8	0.755	3/4	3/8	10.4	10 3/8	1.25	1 1/4	1.75	1 15/16	1	7 1/2		5 1/2
×100	29.3	11.1	11 1/8	0.680	11/16	3/8	10.3	10 3/8	1.12	1 1/8	1.62	1 13/16	1			
×88	26.0	10.8	10 7/8	0.605	5/8	5/16	10.3	10 1/4	0.990	1	1.49	1 11/16	15/16			
×77	22.7	10.6	10 5/8	0.530	1/2	1/4	10.2	10 1/4	0.870	7/8	1.37	1 9/16	7/8			
×68	19.9	10.4	10 3/8	0.470	1/2	1/4	10.1	10 1/8	0.770	3/4	1.27	1 7/16	7/8			
×60	17.7	10.2	10 1/4	0.420	7/16	1/4	10.1	10 1/8	0.680	11/16	1.18	1 3/8	13/16			
×54	15.8	10.1	10 1/8	0.370	3/8	3/16	10.0	10	0.615	5/8	1.12	1 5/16	13/16			
×49	14.4	10.0	10	0.340	5/16	3/16	10.0	10	0.560	9/16	1.06	1 1/4	13/16	↓		↓
W10×45	13.3	10.1	10 1/8	0.350	3/8	3/16	8.02	8	0.620	5/8	1.12	1 5/16	13/16	7 1/2		5 1/2
×39	11.5	9.92	9 7/8	0.315	5/16	3/16	7.99	8	0.530	1/2	1.03	1 3/16	13/16	↓		↓
×33	9.71	9.73	9 3/4	0.290	5/16	3/16	7.96	8	0.435	7/16	0.935	1 1/8	3/4	↓		↓
W10×30	8.84	10.5	10 1/2	0.300	5/16	3/16	5.81	5 3/4	0.510	1/2	0.810	1 1/8	11/16	8 1/4		2 3/4[g]
×26	7.61	10.3	10 3/8	0.260	1/4	1/8	5.77	5 3/4	0.440	7/16	0.740	1 1/16	11/16	↓		↓
×22[c]	6.49	10.2	10 1/8	0.240	1/4	1/8	5.75	5 3/4	0.360	3/8	0.660	15/16	5/8	↓		↓
W10×19	5.62	10.2	10 1/4	0.250	1/4	1/8	4.02	4	0.395	3/8	0.695	15/16	5/8	8 3/8		2 1/4[g]
×17[c]	4.99	10.1	10 1/8	0.240	1/4	1/8	4.01	4	0.330	5/16	0.630	7/8	9/16	↓		↓
×15[c]	4.41	9.99	10	0.230	1/4	1/8	4.00	4	0.270	1/4	0.570	13/16	9/16	↓		↓
×12[c,f]	3.54	9.87	9 7/8	0.190	3/16	1/8	3.96	4	0.210	3/16	0.510	3/4	9/16	↓		↓

[c] Shape is slender for compression with $F_y = 50$ ksi.
[f] Shape exceeds compact limit for flexure with $F_y = 50$ ksi.
[g] The actual size, combination and orientation of fastener components should be compared with the geometry of the cross section to ensure compatibility.
[v] Shape does not meet the h/t_w limit for shear in AISC *Specification* Section G2.1(a) with $F_y = 50$ ksi.

Table 1-1 (continued)
W-Shapes
Properties

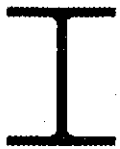

W12-W10

Nominal Wt.	Compact Section Criteria		Axis X-X				Axis Y-Y				r_{ts}	h_o	Torsional Properties	
	$\frac{b_f}{2t_f}$	$\frac{h}{t_w}$	I	S	r	Z	I	S	r	Z			J	C_w
lb/ft			in.^{4}	in.^{3}	in.	in.^{3}	in.^{4}	in.^{3}	in.	in.^{3}	in.	in.	in.^{4}	in.^{6}
58	7.82	27.0	475	78.0	5.28	86.4	107	21.4	2.51	32.5	2.81	11.6	2.10	3570
53	8.69	28.1	425	70.6	5.23	77.9	95.8	19.2	2.48	29.1	2.79	11.5	1.58	3160
50	6.31	26.8	391	64.2	5.18	71.9	56.3	13.9	1.96	21.3	2.25	11.6	1.71	1880
45	7.00	29.6	348	57.7	5.15	64.2	50.0	12.4	1.95	19.0	2.23	11.5	1.26	1650
40	7.77	33.6	307	51.5	5.13	57.0	44.1	11.0	1.94	16.8	2.21	11.4	0.906	1440
35	6.31	36.2	285	45.6	5.25	51.2	24.5	7.47	1.54	11.5	1.79	12.0	0.741	879
30	7.41	41.8	238	38.6	5.21	43.1	20.3	6.24	1.52	9.56	1.77	11.9	0.457	720
26	8.54	47.2	204	33.4	5.17	37.2	17.3	5.34	1.51	8.17	1.75	11.8	0.300	607
22	4.74	41.8	156	25.4	4.91	29.3	4.66	2.31	0.848	3.66	1.04	11.9	0.293	164
19	5.72	46.2	130	21.3	4.82	24.7	3.76	1.88	0.822	2.98	1.02	11.9	0.180	131
16	7.53	49.4	103	17.1	4.67	20.1	2.82	1.41	0.773	2.26	0.983	11.7	0.103	96.9
14	8.82	54.3	88.6	14.9	4.62	17.4	2.36	1.19	0.753	1.90	0.961	11.7	0.0704	80.4
112	4.17	10.4	716	126	4.66	147	236	45.3	2.68	69.2	3.08	10.2	15.1	6020
100	4.62	11.6	623	112	4.60	130	207	40.0	2.65	61.0	3.04	10.0	10.9	5150
88	5.18	13.0	534	98.5	4.54	113	179	34.8	2.63	53.1	2.99	9.81	7.53	4330
77	5.86	14.8	455	85.9	4.49	97.6	154	30.1	2.60	45.9	2.95	9.73	5.11	3630
68	6.58	16.7	394	75.7	4.44	85.3	134	26.4	2.59	40.1	2.92	9.63	3.56	3100
60	7.41	18.7	341	66.7	4.39	74.6	116	23.0	2.57	35.0	2.88	9.52	2.48	2640
54	8.15	21.2	303	60.0	4.37	66.6	103	20.6	2.56	31.3	2.85	9.49	1.82	2320
49	8.93	23.1	272	54.6	4.35	60.4	93.4	18.7	2.54	28.3	2.84	9.44	1.39	2070
45	6.47	22.5	248	49.1	4.32	54.9	53.4	13.3	2.01	20.3	2.27	9.48	1.51	1200
39	7.53	25.0	209	42.1	4.27	46.8	45.0	11.3	1.98	17.2	2.24	9.39	0.976	992
33	9.15	27.1	171	35.0	4.19	38.8	36.6	9.20	1.94	14.0	2.20	9.30	0.583	791
30	5.70	29.5	170	32.4	4.38	36.6	16.7	5.75	1.37	8.84	1.60	10.0	0.622	414
26	6.56	34.0	144	27.9	4.35	31.3	14.1	4.89	1.36	7.50	1.58	9.86	0.402	345
22	7.99	36.9	118	23.2	4.27	26.0	11.4	3.97	1.33	6.10	1.55	9.84	0.239	275
19	5.09	35.4	96.3	18.8	4.14	21.6	4.29	2.14	0.874	3.35	1.06	9.81	0.233	104
17	6.08	36.9	81.9	16.2	4.05	18.7	3.56	1.78	0.845	2.80	1.04	9.77	0.156	85.1
15	7.41	38.5	68.9	13.8	3.95	16.0	2.89	1.45	0.810	2.30	1.01	9.72	0.104	68.3
12	9.43	46.6	53.8	10.9	3.90	12.6	2.18	1.10	0.785	1.74	0.983	9.66	0.0547	50.9

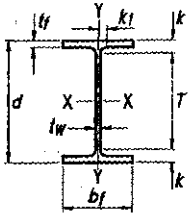

Table 1-1 (continued)
W-Shapes
Dimensions

Shape	Area, A	Depth, d	Web		Flange				Distance					Workable Gage
			Thickness, t_w	$\frac{t_w}{2}$	Width, b_f		Thickness, t_f		k		k_1	T		
									k_{des}	k_{det}				
	in.^{2}	in.	in.	in.	in.		in.		in.	in.	in.	in.		in.
W8×67	19.7	9.00	0.570	5/16	8.28	8 1/4	0.935	15/16	1.33	1 5/8	15/16	5 3/4		5 1/2
×58	17.1	8 3/4	0.510	1/2	8.22	8 1/4	0.810	13/16	1.20	1 1/2	7/8			
×48	14.1	8.50	8 1/2	0.400	3/8	3/16	8.11	8 1/8	0.685	11/16	1.08	1 3/8	13/16	
×40	11.7	8.25	8 1/4	0.360	3/8	3/16	8.07	8 1/8	0.560	9/16	0.954	1 1/4	13/16	
×35	10.3	8.12	8 1/8	0.310	5/16	3/16	8.02	8	0.495	1/2	0.889	1 3/16	13/16	
×31[f]	9.13	8.00	8	0.285	5/16	3/16	8.00	8	0.435	7/16	0.829	1 1/8	3/4	
W8×28	8.25	8.06	8	0.285	5/16	3/16	6.54	6 1/2	0.465	7/16	0.859	15/16	5/8	6 1/8	4
×24	7.08	7.93	7 7/8	0.245	1/4	1/8	6.50	6 1/2	0.400	3/8	0.794	7/8	9/16	6 1/8	4
W8×21	6.16	8.28	8 1/4	0.250	1/4	1/8	5.27	5 1/4	0.400	3/8	0.700	7/8	9/16	6 1/2	2 3/4[g]
×18	5.26	8.14	8 1/8	0.230	1/4	1/8	5.25	5 1/4	0.330	5/16	0.630	13/16	9/16	6 1/2	2 3/4[g]
W8×15	4.44	8.11	8 1/8	0.245	1/4	1/8	4.02	4	0.315	5/16	0.615	13/16	9/16	6 1/2	2 1/4[g]
×13	3.84	7.99	8	0.230	1/4	1/8	4.00	4	0.255	1/4	0.555	3/4	9/16		
×10[e,f]	2.96	7.89	7 7/8	0.170	3/16	1/8	3.94	4	0.205	3/16	0.505	11/16	1/2		
W6×25	7.34	6.38	6 3/8	0.320	5/16	3/16	6.08	6 1/8	0.455	7/16	0.705	15/16	9/16	4 1/2	3 1/2
×20	5.87	6.20	6 1/4	0.260	1/4	1/8	6.02	6	0.365	3/8	0.615	7/8	9/16		
×15[f]	4.43	5.99	6	0.230	1/4	1/8	5.99	6	0.260	1/4	0.510	3/4	9/16		
W6×16	4.74	6.28	6 1/4	0.260	1/4	1/8	4.03	4	0.405	3/8	0.655	7/8	9/16	4 1/2	2 1/4[g]
×12	3.55	6.03	6	0.230	1/4	1/8	4.00	4	0.280	1/4	0.530	3/4	9/16		
×9[f]	2.68	5.90	5 7/8	0.170	3/16	1/8	3.94	4	0.215	3/16	0.465	11/16	1/2		
×8.5[f]	2.52	5.83	5 7/8	0.170	3/16	1/8	3.94	4	0.195	3/16	0.445	11/16	1/2		
W5×19	5.56	5.15	5 1/8	0.270	1/4	1/8	5.03	5	0.430	7/16	0.730	13/16	7/16	3 1/2	2 3/4[g]
×16	4.71	5.01	5	0.240	1/4	1/8	5.00	5	0.360	3/8	0.660	3/4	7/16	3 1/2	2 3/4[g]
W4×13	3.83	4.16	4 1/8	0.280	1/4	1/8	4.06	4	0.345	3/8	0.595	3/4	1/2	2 5/8	2 1/4[g]

[e] Shape is slender for compression with $F_y = 50$ ksi.
[f] Shape exceeds compact limit for flexure with $F_y = 50$ ksi.
[g] The actual size, combination and orientation of fastener components should be compared with the geometry of the cross section to ensure compatibility.

Table 1-1 (continued)
W-Shapes
Properties

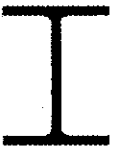

W8-W4

Nominal Wt.	Compact Section Criteria		Axis X-X				Axis Y-Y				r_{ts}	h_o	Torsional Properties	
	$\frac{b_f}{2t_f}$	$\frac{h}{t_w}$	I	S	r	Z	I	S	r	Z			J	C_w
lb/ft			in.^{4}	in.^{3}	in.	in.^{3}	in.^{4}	in.^{3}	in.	in.^{3}	in.	in.	in.^{4}	in.^{6}
67	4.43	11.1	272	60.4	3.72	70.1	88.6	21.4	2.12	32.7	2.43	8.07	5.05	1440
58	5.07	12.4	228	52.0	3.65	59.8	75.1	18.3	2.10	27.9	2.39	7.94	3.33	1180
48	5.92	15.9	184	43.2	3.61	49.0	60.9	15.0	2.08	22.9	2.35	7.82	1.96	931
40	7.21	17.6	146	35.5	3.53	39.8	49.1	12.2	2.04	18.5	2.31	7.69	1.12	726
35	8.10	20.5	127	31.2	3.51	34.7	42.6	10.6	2.03	16.1	2.28	7.63	0.769	619
31	9.19	22.3	110	27.5	3.47	30.4	37.1	9.27	2.02	14.1	2.26	7.57	0.536	530
28	7.03	22.3	98.0	24.3	3.45	27.2	21.7	6.63	1.62	10.1	1.84	7.60	0.537	312
24	8.12	25.9	82.7	20.9	3.42	23.1	18.3	5.63	1.61	8.57	1.81	7.53	0.346	259
21	6.59	27.5	75.3	18.2	3.49	20.4	9.77	3.71	1.26	5.69	1.46	7.88	0.282	152
18	7.95	29.9	61.9	15.2	3.43	17.0	7.97	3.04	1.23	4.66	1.43	7.81	0.172	122
15	6.37	28.1	48.0	11.8	3.29	13.6	3.41	1.70	0.876	2.67	1.06	7.80	0.137	51.8
13	7.84	29.9	39.6	9.91	3.21	11.4	2.73	1.37	0.843	2.15	1.03	7.74	0.0871	40.8
10	9.61	40.5	30.8	7.81	3.22	8.87	2.09	1.06	0.841	1.66	1.01	7.69	0.0426	30.9
25	6.68	15.5	53.4	16.7	2.70	18.9	17.1	5.61	1.52	8.56	1.74	5.93	0.461	150
20	8.25	19.1	41.4	13.4	2.66	14.9	13.3	4.41	1.50	6.72	1.70	5.84	0.240	113
15	11.5	21.6	29.1	9.72	2.56	10.8	9.32	3.11	1.45	4.75	1.66	5.73	0.101	76.5
16	4.98	19.1	32.1	10.2	2.60	11.7	4.43	2.20	0.967	3.39	1.13	5.88	0.223	38.2
12	7.14	21.6	22.1	7.31	2.49	8.30	2.99	1.50	0.918	2.32	1.08	5.75	0.0903	24.7
9	9.16	29.2	16.4	5.56	2.47	6.23	2.20	1.11	0.905	1.72	1.06	5.69	0.0405	17.7
8.5	10.1	29.1	14.9	5.10	2.43	5.73	1.99	1.01	0.890	1.56	1.05	5.64	0.0333	15.8
19	5.85	13.7	26.3	10.2	2.17	11.6	9.13	3.63	1.28	5.53	1.45	4.72	0.316	50.9
16	6.94	15.4	21.4	8.55	2.13	9.63	7.51	3.00	1.26	4.58	1.43	4.65	0.192	40.6
13	5.88	10.6	11.3	5.46	1.72	6.28	3.86	1.90	1.00	2.92	1.16	3.82	0.151	14.0

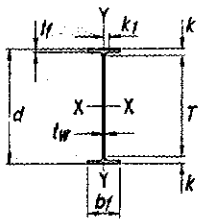

Table 1-2
M-Shapes
Dimensions

Shape	Area, A	Depth, d		Web		$\frac{t_w}{2}$	Flange				Distance			Workable Gage
				Thickness, t_w			Width, b_f		Thickness, t_f		k	k_1	T	
	in.^{2}	in.		in.		in.	in.		in.		in.	in.	in.	in.
M12.5×12.4[c,v]	3.63	12.5	12½	0.155	⅛	1/16	3.75	3¾	0.228	¼	9/16	⅜	11⅜	—
×11.6[c,v]	3.40	12.5	12½	0.155	⅛	1/16	3.50	3½	0.211	3/16	9/16	⅜	11⅜	—
M12×11.8[c]	3.47	12.0	12	0.177	3/16	⅛	3.07	3⅛	0.225	¼	9/16	⅜	10⅞	—
×10.8[c]	3.18	12.0	12	0.160	3/16	⅛	3.07	3⅛	0.210	3/16	9/16	⅜	10⅞	—
M12×10[c,v]	2.95	12.0	12	0.149	⅛	1/16	3.25	3¼	0.180	3/16	½	⅜	11	—
M10×9[c]	2.65	10.0	10	0.157	3/16	⅛	2.69	2¾	0.206	3/16	9/16	⅜	8⅞	—
×8[c]	2.37	9.95	10	0.141	⅛	1/16	2.69	2¾	0.182	3/16	9/16	⅜	8⅞	—
M10×7.5[c,v]	2.22	9.99	10	0.130	⅛	1/16	2.69	2¾	0.173	3/16	7/16	5/16	9⅛	—
M8×6.5[c]	1.92	8.00	8	0.135	⅛	1/16	2.28	2¼	0.189	3/16	9/16	⅜	6⅞	—
×6.2[c]	1.82	8.00	8	0.129	⅛	1/16	2.28	2¼	0.177	3/16	7/16	¼	7⅛	—
M6×4.4[c]	1.29	6.00	6	0.114	⅛	1/16	1.84	1⅞	0.171	3/16	⅜	¼	5¼	—
×3.7[c]	1.09	5.92	5⅞	0.0980	⅛	1/16	2.00	2	0.129	⅛	5/16	¼	5¼	—
M5×18.9[f]	5.56	5.00	5	0.316	5/16	3/16	5.00	5	0.416	7/16	13/16	½	3⅜	2¾[g]
M4×6[f]	1.75	3.80	3¾	0.130	⅛	1/16	3.80	3¾	0.160	3/16	½	⅜	2¾	—
×4.08	1.27	4.00	4	0.115	⅛	1/16	2.25	2¼	0.170	3/16	9/16	⅜	2⅞	—
×3.45	1.01	4.00	4	0.0920	1/16	1/16	2.25	2¼	0.130	⅛	½	⅜	3	—
×3.2	1.01	4.00	4	0.0920	1/16	1/16	2.25	2¼	0.130	⅛	½	⅜	3	—
M3×2.9	0.914	3.00	3	0.0900	1/16	1/16	2.25	2¼	0.130	⅛	½	⅜	2	—

[c] Shape is slender for compression with $F_y = 36$ ksi.
[f] Shape exceeds compact limit for flexure with $F_y = 36$ ksi.
[g] The actual size, combination and orientation of fastener components should be compared with the geometry of the cross section to ensure compatibility.
[t] Shape has tapered flanges while other M-shapes have parallel flange surfaces.
[v] Shape does not meet the h/t_w limit for shear in AISC *Specification* Section G2.1(b)(i) with $F_y = 36$ ksi.
— Indicates flange is too narrow to establish a workable gage.

Table 1-2 (continued)
M-Shapes
Properties

M-SHAPES

Nominal Wt.	Compact Section Criteria		Axis X-X				Axis Y-Y				r_{ts}	h_o	$\frac{J}{S_x h_o}$	Torsional Properties	
	$\frac{b_f}{2t_f}$	$\frac{h}{t_w}$	I	S	r	Z	I	S	r	Z				J	C_w
lb/ft			in.^{4}	in.^{3}	in.	in.^{3}	in.^{4}	in.^{3}	in.	in.^{3}	in.	in.		in.^{4}	in.^{6}
12.4	8.22	74.8	89.3	14.2	4.96	16.5	2.01	1.07	0.744	1.68	0.933	12.3	0.000283	0.0493	76.0
11.6	8.29	74.8	80.3	12.8	4.86	15.0	1.51	0.864	0.667	1.37	0.852	12.3	0.000263	0.0414	57.1
11.8	6.81	62.5	72.2	12.0	4.56	14.3	1.09	0.709	0.559	1.15	0.731	11.8	0.000355	0.0500	37.7
10.8	7.30	69.2	66.7	11.1	4.58	13.2	1.01	0.661	0.564	1.07	0.732	11.8	0.000300	0.0393	35.0
10	9.03	74.7	61.7	10.3	4.57	12.2	1.03	0.636	0.592	1.02	0.768	11.8	0.000240	0.0292	35.9
9	6.53	58.4	39.0	7.79	3.83	9.22	0.672	0.500	0.503	0.809	0.650	9.79	0.000411	0.0314	16.1
8	7.39	65.0	34.6	6.95	3.82	8.20	0.593	0.441	0.500	0.711	0.646	9.77	0.000328	0.0224	14.2
7.5	7.77	71.0	33.0	6.60	3.85	7.77	0.562	0.418	0.503	0.670	0.646	9.82	0.000289	0.0187	13.5
6.5	6.03	53.8	18.5	4.63	3.11	5.43	0.376	0.329	0.443	0.529	0.563	7.81	0.000509	0.0184	5.73
6.2	6.44	56.5	17.6	4.39	3.10	5.15	0.352	0.308	0.439	0.495	0.560	7.82	0.000455	0.0156	5.38
4.4	5.39	47.0	7.23	2.41	2.36	2.80	0.180	0.195	0.372	0.311	0.467	5.83	0.000707	0.00990	1.53
3.7	7.75	54.7	5.96	2.01	2.34	2.33	0.173	0.173	0.398	0.273	0.499	5.79	0.000459	0.00530	1.45
18.9	6.01	11.2	24.2	9.67	2.08	11.1	8.70	3.48	1.25	5.33	1.44	4.58	0.00709	0.313	45.7
6	11.9	22.0	4.72	2.48	1.64	2.74	1.47	0.771	0.915	1.18	1.04	3.64	0.00208	0.0184	4.87
4.08	6.62	26.4	3.53	1.77	1.67	2.00	0.325	0.289	0.506	0.453	0.593	3.83	0.00218	0.0147	1.19
3.45	8.65	33.9	2.86	1.43	1.68	1.60	0.248	0.221	0.496	0.346	0.580	3.87	0.00148	0.00820	0.930
3.2	8.65	33.9	2.86	1.43	1.68	1.60	0.248	0.221	0.496	0.346	0.580	3.87	0.00148	0.00820	0.930
2.9	8.65	23.6	1.50	1.00	1.28	1.12	0.248	0.221	0.521	0.344	0.597	2.87	0.00275	0.00790	0.511

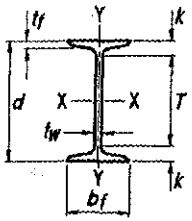

Table 1-3
S-Shapes
Dimensions

Shape	Area, A	Depth, d		Web			Flange				Distance		
				Thickness, t_w		$\frac{t_w}{2}$	Width, b_f		Thickness, t_f		k	T	Workable Gage
	in.²	in.		in.		in.	in.		in.		in.	in.	in.
S24×121	35.5	24.5	24½	0.800	13/16	7/16	8.05	8	1.09	1 1/16	2	20½	4
×106	31.1	24.5	24½	0.620	5/8	5/16	7.87	7 7/8	1.09	1 1/16	2	20½	4
S24×100	29.3	24.0	24	0.745	3/4	3/8	7.25	7¼	0.870	7/8	1¾	20½	4
×90	26.5	24.0	24	0.625	5/8	5/16	7.13	7⅛	0.870	7/8	1¾	20½	4
×80	23.5	24.0	24	0.500	½	¼	7.00	7	0.870	7/8	1¾	20½	4
S20×96	28.2	20.3	20¼	0.800	13/16	7/16	7.20	7¼	0.920	15/16	1¾	16¾	4
×86	25.3	20.3	20¼	0.660	11/16	3/8	7.06	7	0.920	15/16	1¾	16¾	4
S20×75	22.0	20.0	20	0.635	5/8	5/16	6.39	6⅜	0.795	13/16	1⅝	16¾	3½[g]
×66	19.4	20.0	20	0.505	½	¼	6.26	6¼	0.795	13/16	1⅝	16¾	3½[g]
S18×70	20.5	18.0	18	0.711	11/16	3/8	6.25	6¼	0.691	11/16	1½	15	3½[g]
×54.7	16.0	18.0	18	0.461	7/16	¼	6.00	6	0.691	11/16	1½	15	3½[g]
S15×50	14.7	15.0	15	0.550	9/16	5/16	5.64	5⅝	0.622	5/8	1⅜	12¼	3½[g]
×42.9	12.6	15.0	15	0.411	7/16	¼	5.50	5½	0.622	5/8	1⅜	12¼	3½[g]
S12×50	14.7	12.0	12	0.687	11/16	3/8	5.48	5½	0.659	11/16	1 7/16	9⅛	3[g]
×40.8	11.9	12.0	12	0.462	7/16	¼	5.25	5¼	0.659	11/16	1 7/16	9⅛	3[g]
S12×35	10.2	12.0	12	0.428	7/16	¼	5.08	5⅛	0.544	9/16	1 3/16	9⅝	3[g]
×31.8	9.31	12.0	12	0.350	3/8	3/16	5.00	5	0.544	9/16	1 3/16	9⅝	3[g]
S10×35	10.3	10.0	10	0.594	5/8	5/16	4.94	5	0.491	½	1⅛	7¾	2¾[g]
×25.4	7.45	10.0	10	0.311	5/16	3/16	4.66	4⅝	0.491	½	1⅛	7¾	2¾[g]
S8×23	6.76	8.00	8	0.441	7/16	¼	4.17	4⅛	0.425	7/16	1	6	2¼[g]
×18.4	5.40	8.00	8	0.271	¼	1/8	4.00	4	0.425	7/16	1	6	2¼[g]
S6×17.25	5.05	6.00	6	0.465	7/16	¼	3.57	3⅝	0.359	3/8	13/16	4⅜	—
×12.5	3.66	6.00	6	0.232	¼	1/8	3.33	3⅜	0.359	3/8	13/16	4⅜	—
S5×10	2.93	5.00	5	0.214	3/16	1/8	3.00	3	0.326	5/16	¾	3½	—
S4×9.5	2.79	4.00	4	0.326	5/16	3/16	2.80	2¾	0.293	5/16	¾	2½	—
×7.7	2.26	4.00	4	0.193	3/16	1/8	2.66	2⅝	0.293	5/16	¾	2½	—
S3×7.5	2.20	3.00	3	0.349	3/8	3/16	2.51	2½	0.260	¼	5/8	1¾	—
×5.7	1.66	3.00	3	0.170	3/16	1/8	2.33	2⅜	0.260	¼	5/8	1¾	—

[g] The actual size, combination and orientation of fastener components should be compared with the geometry of the cross section to ensure compatibility.

— Indicates flange is too narrow to establish a workable gage.

Table 1-3 (continued)
S-Shapes
Properties

S-SHAPES

Nominal Wt.	Compact Section Criteria		Axis X-X				Axis Y-Y				r_{ts}	h_o	Torsional Properties	
	$\frac{b_f}{2t_f}$	$\frac{h}{t_w}$	I	S	r	Z	I	S	r	Z			J	C_w
lb/ft			in.^{4}	in.^{3}	in.	in.^{3}	in.^{4}	in.^{3}	in.	in.^{3}	in.	in.	in.^{4}	in.^{6}
121	3.69	25.9	3160	258	9.43	306	83.0	20.6	1.53	36.3	1.94	23.4	12.8	11400
106	3.61	33.4	2940	240	9.71	279	76.8	19.5	1.57	33.4	1.93	23.4	10.1	10500
100	4.16	27.8	2380	199	9.01	239	47.4	13.1	1.27	24.0	1.66	23.1	7.59	6350
90	4.09	33.1	2250	187	9.21	222	44.7	12.5	1.30	22.4	1.66	23.1	6.05	5980
80	4.02	41.4	2100	175	9.47	204	42.0	12.0	1.34	20.8	1.67	23.1	4.89	5620
96	3.91	21.1	1670	165	7.71	198	49.9	13.9	1.33	24.9	1.71	19.4	8.40	4690
86	3.84	25.6	1570	155	7.89	183	46.6	13.2	1.36	23.1	1.71	19.4	6.65	4370
75	4.02	26.6	1280	128	7.62	152	29.5	9.25	1.16	16.7	1.49	19.2	4.59	2720
66	3.93	33.5	1190	119	7.83	139	27.5	8.78	1.19	15.4	1.49	19.2	3.58	2530
70	4.52	21.5	923	103	6.70	124	24.0	7.69	1.08	14.3	1.42	17.3	4.10	1800
54.7	4.34	33.2	801	89.0	7.07	104	20.7	6.91	1.14	12.1	1.42	17.3	2.33	1550
50	4.53	22.7	485	64.7	5.75	77.0	15.6	5.53	1.03	10.0	1.32	14.4	2.12	805
42.9	4.42	30.4	446	59.4	5.95	69.2	14.3	5.19	1.06	9.08	1.31	14.4	1.54	737
50	4.16	13.7	303	50.6	4.55	60.9	15.6	5.69	1.03	10.3	1.32	11.3	2.77	501
40.8	3.98	20.6	270	45.1	4.76	52.7	13.5	5.13	1.06	8.86	1.30	11.3	1.69	433
35	4.67	23.1	228	38.1	4.72	44.6	9.84	3.88	0.980	6.80	1.22	11.5	1.05	323
31.8	4.60	28.3	217	36.2	4.83	41.8	9.33	3.73	1.00	6.44	1.21	11.5	0.878	306
35	5.03	13.4	147	29.4	3.78	35.4	8.30	3.36	0.899	6.19	1.16	9.51	1.29	188
25.4	4.75	25.6	123	24.6	4.07	28.3	6.73	2.89	0.950	4.99	1.14	9.51	0.603	152
23	4.91	14.1	64.7	16.2	3.09	19.2	4.27	2.05	0.795	3.67	0.999	7.58	0.550	61.2
18.4	4.71	22.9	57.5	14.4	3.26	16.5	3.69	1.84	0.827	3.18	0.985	7.58	0.335	52.9
17.25	4.97	9.67	26.2	8.74	2.28	10.5	2.29	1.28	0.673	2.35	0.859	5.64	0.371	18.2
12.5	4.64	19.4	22.0	7.34	2.45	8.45	1.80	1.08	0.702	1.86	0.831	5.64	0.167	14.3
10	4.61	16.8	12.3	4.90	2.05	5.66	1.19	0.795	0.638	1.37	0.754	4.67	0.114	6.52
9.5	4.77	8.33	6.76	3.38	1.56	4.04	0.887	0.635	0.564	1.13	0.698	3.71	0.120	3.05
7.7	4.54	14.1	6.05	3.03	1.64	3.50	0.748	0.562	0.576	0.970	0.676	3.71	0.0732	2.57
7.5	4.83	5.38	2.91	1.94	1.15	2.35	0.578	0.461	0.513	0.821	0.638	2.74	0.0896	1.08
5.7	4.48	11.0	2.50	1.67	1.23	1.94	0.447	0.383	0.518	0.656	0.605	2.74	0.0433	0.838

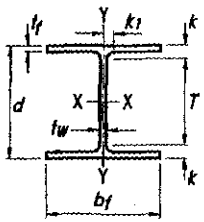

Table 1-4
HP-Shapes
Dimensions

Shape	Area, A	Depth, d		Web			Flange				Distance			
				Thickness, t_w		$\frac{t_w}{2}$	Width, b_f		Thickness, t_f		k	k_1	T	Workable Gage
	in.^{2}	in.		in.		in.	in.		in.		in.	in.	in.	in.
HP18×204	60.2	18.3	18 1/4	1.13	1 1/8	9/16	18.1	18 1/8	1.13	1 1/8	2 5/16	1 3/4	13 1/2	7 1/2
×181	53.2	18.0	18	1.00	1	1/2	18.0	18	1.00	1	2 3/16	1 11/16		
×157[f]	46.2	17.7	17 3/4	0.870	7/8	7/16	17.9	17 7/8	0.870	7/8	2 1/16	1 5/8		
×135[f]	39.9	17.5	17 1/2	0.750	3/4	3/8	17.8	17 3/4	0.750	3/4	1 15/16	1 9/16		
HP16×183	54.1	16.5	16 1/2	1.13	1 1/8	9/16	16.3	16 1/2	1.13	1 1/8	2 5/16	1 3/4	11 3/4	5 1/2
×162	47.7	16.3	16 1/4	1.00	1	1/2	16.1	16 1/8	1.00	1	2 3/16	1 11/16		
×141	41.7	16.0	16	0.875	7/8	7/16	16.0	16	0.875	7/8	2 1/16	1 5/8		
×121[f]	35.8	15.8	15 3/4	0.750	3/4	3/8	15.9	15 7/8	0.750	3/4	1 15/16	1 9/16		
×101[f]	29.9	15.5	15 1/2	0.625	5/8	5/16	15.8	15 3/4	0.625	5/8	1 13/16	1 1/2		
×88[c,f]	25.8	15.3	15 3/8	0.540	9/16	5/16	15.7	15 1/16	0.540	9/16	1 3/4	1 7/16		
HP14×117[f]	34.4	14.2	14 1/4	0.805	13/16	7/16	14.9	14 7/8	0.805	13/16	1 1/2	1 1/16	11 1/4	5 1/2
×102[f]	30.1	14.0	14	0.705	11/16	3/8	14.8	14 3/4	0.705	11/16	1 3/8	1		
×89[f]	26.1	13.8	13 7/8	0.615	5/8	5/16	14.7	14 3/4	0.615	5/8	1 5/16	15/16		
×73[c,f]	21.4	13.6	13 5/8	0.505	1/2	1/4	14.6	14 5/8	0.505	1/2	1 3/16	7/8		
HP12×84	24.6	12.3	12 1/4	0.685	11/16	3/8	12.3	12 1/4	0.685	11/16	1 3/8	1	9 1/2	5 1/2
×74[f]	21.8	12.1	12 1/8	0.605	5/8	5/16	12.2	12 1/4	0.610	5/8	1 5/16	15/16		
×63[f]	18.4	11.9	12	0.515	1/2	1/4	12.1	12 1/8	0.515	1/2	1 1/4	7/8		
×53[c,f]	15.5	11.8	11 3/4	0.435	7/16	1/4	12.0	12	0.435	7/16	1 1/8	7/8		
HP10×57	16.7	9.99	10	0.565	9/16	5/16	10.2	10 1/4	0.565	9/16	1 1/4	15/16	7 1/2	5 1/2
×42[f]	12.4	9.70	9 3/4	0.415	7/16	1/4	10.1	10 1/8	0.420	7/16	1 1/8	13/16	7 1/2	5 1/2
HP8×36[f]	10.6	8.02	8	0.445	7/16	1/4	8.16	8 1/8	0.445	7/16	1 1/8	7/8	5 3/4	5 1/2

[c] Shape is slender for compression with $F_y = 50$ ksi.
[f] Shape exceeds compact limit for flexure with $F_y = 50$ ksi.

Table 1-4 (continued)
HP-Shapes
Properties

HP-SHAPES

Nominal Wt.	Compact Section Criteria		Axis X-X				Axis Y-Y				r_{ts}	h_o	$\frac{J}{S_x h_o}$	Torsional Properties	
	$\frac{b_f}{2t_f}$	$\frac{h}{t_w}$	I	S	r	Z	I	S	r	Z				J	C_w
lb/ft			in.^{4}	in.^{3}	in.	in.^{3}	in.^{4}	in.^{3}	in.	in.^{3}	in.	in.		in.^{4}	in.^{6}
204	8.01	12.1	3480	380	7.60	433	1120	124	4.31	191	5.03	17.2	0.00451	29.5	82500
181	9.00	13.6	3020	336	7.53	379	974	108	4.28	167	4.96	17.0	0.00362	20.7	70400
157	10.3	15.6	2570	290	7.46	327	833	93.1	4.25	143	4.92	16.8	0.00285	13.9	59000
135	11.9	18.2	2200	251	7.43	281	706	79.3	4.21	122	4.85	16.8	0.00216	9.12	49500
183	7.21	10.5	2510	304	6.81	349	818	100	3.89	156	4.54	15.4	0.00576	26.9	48300
162	8.05	11.9	2190	269	6.78	306	697	86.6	3.82	134	4.45	15.3	0.00457	18.8	40800
141	9.14	13.6	1870	234	6.70	264	599	74.9	3.79	116	4.40	15.1	0.00365	12.9	34300
121	10.6	15.9	1590	201	6.66	226	504	63.4	3.75	97.6	4.34	15.1	0.00275	8.35	28500
101	12.6	19.0	1300	168	6.59	187	412	52.2	3.71	80.1	4.27	14.9	0.00203	5.07	22800
88	14.5	22.0	1110	145	6.56	161	349	44.5	3.68	68.2	4.21	14.8	0.00161	3.45	19000
117	9.25	14.2	1220	172	5.96	194	443	59.5	3.59	91.4	4.15	13.4	0.00348	8.02	19900
102	10.5	16.2	1050	150	5.92	169	380	51.4	3.56	78.8	4.10	13.3	0.00270	5.39	16800
89	11.9	18.5	904	131	5.88	146	326	44.3	3.53	67.7	4.05	13.2	0.00207	3.59	14200
73	14.4	22.6	729	107	5.84	118	261	35.8	3.49	54.6	4.00	13.1	0.00143	2.01	11200
84	8.97	14.2	650	106	5.14	120	213	34.6	2.94	53.2	3.41	11.6	0.00345	4.24	7140
74	10.0	16.1	569	93.8	5.11	105	186	30.4	2.92	46.6	3.38	11.5	0.00276	2.98	6160
63	11.8	18.9	472	79.1	5.06	88.3	153	25.3	2.88	38.7	3.33	11.4	0.00202	1.83	5000
53	13.8	22.3	393	66.7	5.03	74.0	127	21.1	2.86	32.2	3.29	11.4	0.00148	1.12	4080
57	9.03	13.9	294	58.8	4.18	66.5	101	19.7	2.45	30.3	2.84	9.43	0.00355	1.97	2240
42	12.0	18.9	210	43.4	4.13	48.3	71.7	14.2	2.41	21.8	2.77	9.28	0.00202	0.813	1540
36	9.16	14.2	119	29.8	3.36	33.6	40.3	9.88	1.95	15.2	2.26	7.58	0.00341	0.770	578

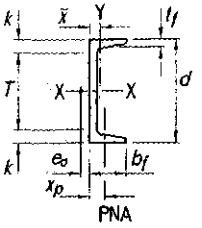

Table 1-5
C-Shapes
Dimensions

Shape	Area, A	Depth, d	Web			Flange				Distance			r_{ts}	h_o
			Thickness, t_w		$\frac{t_w}{2}$	Width, b_f		Average Thickness, t_f		k	T	Workable Gage		
	in.^{2}	in.	in.		in.	in.		in.		in.	in.	in.	in.	in.
C15×50	14.7	15.0	0.716	11/16	3/8	3.72	3 3/4	0.650	5/8	17/16	12 1/8	2 1/4	1.17	14.4
×40	11.8	15.0	0.520	1/2	1/4	3.52	3 1/2	0.650	5/8	17/16	12 1/8	2	1.15	14.4
×33.9	10.0	15.0	0.400	3/8	3/16	3.40	3 3/8	0.650	5/8	17/16	12 1/8	2	1.13	14.4
C12×30	8.81	12.0	0.510	1/2	1/4	3.17	3 1/8	0.501	1/2	1 1/8	9 3/4	1 3/4[g]	1.01	11.5
×25	7.34	12.0	0.387	3/8	3/16	3.05	3	0.501	1/2	1 1/8	9 3/4	1 3/4[g]	1.00	11.5
×20.7	6.08	12.0	0.282	5/16	3/16	2.94	3	0.501	1/2	1 1/8	9 3/4	1 3/4[g]	0.983	11.5
C10×30	8.81	10.0	0.673	11/16	3/8	3.03	3	0.436	7/16	1	8	1 3/4[g]	0.924	9.56
×25	7.35	10.0	0.526	1/2	1/4	2.89	2 7/8	0.436	7/16	1	8	1 3/4[g]	0.911	9.56
×20	5.87	10.0	0.379	3/8	3/16	2.74	2 3/4	0.436	7/16	1	8	1 1/2[g]	0.894	9.56
×15.3	4.48	10.0	0.240	1/4	1/8	2.60	2 5/8	0.436	7/16	1	8	1 1/2[g]	0.868	9.56
C9×20	5.87	9.00	0.448	7/16	1/4	2.65	2 5/8	0.413	7/16	1	7	1 1/2[g]	0.850	8.59
×15	4.40	9.00	0.285	5/16	3/16	2.49	2 1/2	0.413	7/16	1	7	1 3/8[g]	0.825	8.59
×13.4	3.94	9.00	0.233	1/4	1/8	2.43	2 3/8	0.413	7/16	1	7	1 3/8[g]	0.814	8.59
C8×18.75	5.51	8.00	0.487	1/2	1/4	2.53	2 1/2	0.390	3/8	15/16	6 1/8	1 1/2[g]	0.800	7.61
×13.75	4.03	8.00	0.303	5/16	3/16	2.34	2 3/8	0.390	3/8	15/16	6 1/8	1 3/8[g]	0.774	7.61
×11.5	3.37	8.00	0.220	1/4	1/8	2.26	2 1/4	0.390	3/8	15/16	6 1/8	1 3/8[g]	0.756	7.61
C7×14.75	4.33	7.00	0.419	7/16	1/4	2.30	2 1/4	0.366	3/8	7/8	5 1/4	1 1/4[g]	0.738	6.63
×12.25	3.59	7.00	0.314	5/16	3/16	2.19	2 1/4	0.366	3/8	7/8	5 1/4	1 1/4[g]	0.722	6.63
×9.8	2.87	7.00	0.210	3/16	1/8	2.09	2 1/8	0.366	3/8	7/8	5 1/4	1 1/4[g]	0.698	6.63
C6×13	3.82	6.00	0.437	7/16	1/4	2.16	2 1/8	0.343	5/16	13/16	4 3/8	1 3/8[g]	0.689	5.66
×10.5	3.07	6.00	0.314	5/16	3/16	2.03	2	0.343	5/16	13/16	4 3/8	1 1/8[g]	0.669	5.66
×8.2	2.39	6.00	0.200	3/16	1/8	1.92	1 7/8	0.343	5/16	13/16	4 3/8	1 1/8[g]	0.643	5.66
C5×9	2.64	5.00	0.325	5/16	3/16	1.89	1 7/8	0.320	5/16	3/4	3 1/2	1 1/8[g]	0.616	4.68
×6.7	1.97	5.00	0.190	3/16	1/8	1.75	1 3/4	0.320	5/16	3/4	3 1/2	—	0.584	4.68
C4×7.25	2.13	4.00	0.321	5/16	3/16	1.72	1 3/4	0.296	5/16	3/4	2 1/2	1[g]	0.563	3.70
×6.25	1.77	4.00	0.247	1/4	1/8	1.65	1 3/4	0.272	5/16	3/4	2 1/2	—	0.546	3.73
×5.4	1.58	4.00	0.184	3/16	1/8	1.58	1 5/8	0.296	5/16	3/4	2 1/2	—	0.528	3.70
×4.5	1.38	4.00	0.125	1/8	1/16	1.58	1 5/8	0.296	5/16	3/4	2 1/2	—	0.524	3.70
C3×6	1.76	3.00	0.356	3/8	3/16	1.60	1 5/8	0.273	1/4	11/16	1 5/8	—	0.519	2.73
×5	1.47	3.00	0.258	1/4	1/8	1.50	1 1/2	0.273	1/4	11/16	1 5/8	—	0.496	2.73
×4.1	1.20	3.00	0.170	3/16	1/8	1.41	1 3/8	0.273	1/4	11/16	1 5/8	—	0.469	2.73
×3.5	1.09	3.00	0.132	1/8	1/16	1.37	1 3/8	0.273	1/4	11/16	1 5/8	—	0.456	2.73

[g] The actual size, combination and orientation of fastener components should be compared with the geometry of the cross section to ensure compatibility.

— Indicates flange is too narrow to establish a workable gage.

Table 1-5 (continued)
C-Shapes
Properties

C-SHAPES

Nominal Wt.	Shear Ctr, e_o	Axis X-X				Axis Y-Y						Torsional Properties			
		I	S	r	Z	I	S	r	$\bar{x}$	Z	x_p	J	C_w	$\bar{r}_o$	H
lb/ft	in.	in.^{4}	in.^{3}	in.	in.^{3}	in.^{4}	in.^{3}	in.	in.	in.^{3}	in.	in.^{4}	in.^{6}	in.	
50	0.583	404	53.8	5.24	68.5	11.0	3.77	0.865	0.799	8.14	0.490	2.65	492	5.49	0.937
40	0.767	348	46.5	5.43	57.5	9.17	3.34	0.883	0.778	6.84	0.392	1.45	410	5.71	0.927
33.9	0.896	315	42.0	5.61	50.8	8.07	3.09	0.901	0.788	6.19	0.332	1.01	358	5.94	0.920
30	0.618	162	27.0	4.29	33.8	5.12	2.05	0.762	0.674	4.32	0.367	0.861	151	4.54	0.919
25	0.746	144	24.0	4.43	29.4	4.45	1.87	0.779	0.674	3.82	0.306	0.538	130	4.72	0.909
20.7	0.870	129	21.5	4.61	25.6	3.86	1.72	0.797	0.698	3.47	0.253	0.369	112	4.93	0.899
30	0.368	103	20.7	3.43	26.7	3.93	1.65	0.668	0.649	3.78	0.441	1.22	79.5	3.63	0.921
25	0.494	91.1	18.2	3.52	23.1	3.34	1.47	0.675	0.617	3.18	0.367	0.687	68.3	3.76	0.912
20	0.636	78.9	15.8	3.67	19.4	2.80	1.31	0.690	0.606	2.70	0.294	0.368	56.9	3.93	0.900
15.3	0.796	67.3	13.5	3.88	15.9	2.27	1.15	0.711	0.634	2.34	0.224	0.209	45.5	4.19	0.884
20	0.515	60.9	13.5	3.22	16.9	2.41	1.17	0.640	0.583	2.46	0.326	0.427	39.4	3.46	0.899
15	0.681	51.0	11.3	3.40	13.6	1.91	1.01	0.659	0.586	2.04	0.245	0.208	31.0	3.69	0.882
13.4	0.742	47.8	10.6	3.48	12.6	1.75	0.954	0.666	0.601	1.94	0.219	0.168	28.2	3.79	0.875
18.75	0.431	43.9	11.0	2.82	13.9	1.97	1.01	0.598	0.565	2.17	0.344	0.434	25.1	3.05	0.894
13.75	0.604	36.1	9.02	2.99	11.0	1.52	0.848	0.613	0.554	1.73	0.252	0.186	19.2	3.26	0.874
11.5	0.697	32.5	8.14	3.11	9.63	1.31	0.775	0.623	0.572	1.57	0.211	0.130	16.5	3.41	0.862
14.75	0.441	27.2	7.78	2.51	9.75	1.37	0.772	0.561	0.532	1.63	0.309	0.267	13.1	2.75	0.875
12.25	0.538	24.2	6.92	2.59	8.46	1.16	0.696	0.568	0.525	1.42	0.257	0.161	11.2	2.86	0.862
9.8	0.647	21.2	6.07	2.72	7.19	0.957	0.617	0.578	0.541	1.26	0.205	0.0996	9.15	3.02	0.845
13	0.380	17.3	5.78	2.13	7.29	1.05	0.638	0.524	0.514	1.35	0.318	0.237	7.19	2.37	0.858
10.5	0.486	15.1	5.04	2.22	6.18	0.860	0.561	0.529	0.500	1.14	0.256	0.128	5.91	2.48	0.842
8.2	0.599	13.1	4.35	2.34	5.16	0.687	0.488	0.536	0.512	0.987	0.199	0.0736	4.70	2.65	0.824
9	0.427	8.89	3.56	1.84	4.39	0.624	0.444	0.486	0.478	0.913	0.264	0.109	2.93	2.10	0.815
6.7	0.552	7.48	2.99	1.95	3.55	0.470	0.372	0.489	0.484	0.757	0.215	0.0549	2.22	2.26	0.790
7.25	0.386	4.58	2.29	1.47	2.84	0.425	0.337	0.447	0.459	0.695	0.266	0.0817	1.24	1.75	0.767
6.25	0.434	4.00	2.00	1.50	2.43	0.345	0.284	0.441	0.435	0.569	0.221	0.0487	1.03	1.79	0.764
5.4	0.501	3.85	1.92	1.56	2.29	0.312	0.277	0.444	0.457	0.565	0.231	0.0399	0.921	1.88	0.742
4.5	0.587	3.65	1.83	1.63	2.12	0.289	0.265	0.457	0.493	0.531	0.321	0.0322	0.871	2.01	0.710
6	0.322	2.07	1.38	1.09	1.74	0.300	0.263	0.413	0.456	0.543	0.294	0.0725	0.462	1.40	0.690
5	0.392	1.85	1.23	1.12	1.52	0.241	0.228	0.405	0.439	0.464	0.245	0.0425	0.379	1.45	0.673
4.1	0.461	1.65	1.10	1.18	1.32	0.191	0.196	0.398	0.437	0.399	0.262	0.0269	0.307	1.53	0.655
3.5	0.493	1.57	1.04	1.20	1.24	0.169	0.182	0.394	0.443	0.364	0.296	0.0226	0.276	1.57	0.646

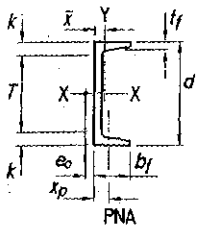

Table 1-6
MC-Shapes
Dimensions

Shape	Area, A	Depth, d	Web			Flange				Distance			r_{ts}	h_o
			Thickness, t_w		$\frac{t_w}{2}$	Width, b_f		Average Thickness, t_f		k	T	Workable Gage		
	in.^{2}	in.	in.		in.	in.		in.		in.	in.	in.	in.	in.
MC18×58	17.1	18.0	0.700	11/16	3/8	4.20	4 1/4	0.625	5/8	1 7/16	15 1/8	2 1/2	1.35	17.4
×51.9	15.3	18.0	0.600	5/8	5/16	4.10	4 1/8	0.625	5/8	1 7/16			1.35	17.4
×45.8	13.5	18.0	0.500	1/2	1/4	4.00	4	0.625	5/8	1 7/16			1.34	17.4
×42.7	12.6	18.0	0.450	7/16	1/4	3.95	4	0.625	5/8	1 7/16			1.34	17.4
MC13×50	14.7	13.0	0.787	13/16	7/16	4.41	4 3/8	0.610	5/8	1 7/16	10 1/8	2 1/2	1.41	12.4
×40	11.7	13.0	0.560	9/16	5/16	4.19	4 1/8	0.610	5/8	1 7/16			1.38	12.4
×35	10.3	13.0	0.447	7/16	1/4	4.07	4 1/8	0.610	5/8	1 7/16			1.35	12.4
×31.8	9.35	13.0	0.375	3/8	3/16	4.00	4	0.610	5/8	1 7/16			1.34	12.4
MC12×50	14.7	12.0	0.835	13/16	7/16	4.14	4 1/8	0.700	11/16	1 5/16	9 3/8	2 1/2	1.37	11.3
×45	13.2	12.0	0.710	11/16	3/8	4.01	4	0.700	11/16	1 5/16			1.35	11.3
×40	11.8	12.0	0.590	9/16	5/16	3.89	3 7/8	0.700	11/16	1 5/16			1.33	11.3
×35	10.3	12.0	0.465	7/16	1/4	3.77	3 3/4	0.700	11/16	1 5/16			1.30	11.3
×31	9.12	12.0	0.370	3/8	3/16	3.67	3 5/8	0.700	11/16	1 5/16		2 1/4	1.28	11.3
MC12×14.3	4.18	12.0	0.250	1/4	1/8	2.12	2 1/8	0.313	5/16	3/4	10 1/2	1 1/4[g]	0.672	11.7
MC12×10.6[c]	3.10	12.0	0.190	3/16	1/8	1.50	1 1/2	0.309	5/16	3/4	10 1/2	—	0.478	11.7
MC10×41.1	12.1	10.0	0.796	13/16	7/16	4.32	4 3/8	0.575	9/16	1 5/16	7 3/8	2 1/2[g]	1.44	9.43
×33.6	9.87	10.0	0.575	9/16	5/16	4.10	4 1/8	0.575	9/16	1 5/16	7 3/8	2 1/2[g]	1.40	9.43
×28.5	8.37	10.0	0.425	7/16	1/4	3.95	4	0.575	9/16	1 5/16	7 3/8	2 1/2[g]	1.36	9.43
MC10×25	7.34	10.0	0.380	3/8	3/16	3.41	3 3/8	0.575	9/16	1 5/16	7 3/8	2[g]	1.17	9.43
×22	6.45	10.0	0.290	5/16	3/16	3.32	3 3/8	0.575	9/16	1 5/16	7 3/8	2[g]	1.14	9.43
MC10×8.4[c]	2.46	10.0	0.170	3/16	1/8	1.50	1 1/2	0.280	1/4	3/4	8 1/2	—	0.486	9.72
×6.5[c]	1.95	10.0	0.152	1/8	1/16	1.17	1 1/8	0.202	3/16	9/16	8 7/8	—	0.363	9.80
MC9×25.4	7.47	9.00	0.450	7/16	1/4	3.50	3 1/2	0.550	9/16	1 1/4	6 1/2	2[g]	1.20	8.45
×23.9	7.02	9.00	0.400	3/8	3/16	3.45	3 1/2	0.550	9/16	1 1/4	6 1/2	2[g]	1.18	8.45
MC8×22.8	6.70	8.00	0.427	7/16	1/4	3.50	3 1/2	0.525	1/2	1 3/16	5 5/8	2[g]	1.20	7.48
×21.4	6.28	8.00	0.375	3/8	3/16	3.45	3 1/2	0.525	1/2	1 3/16	5 5/8	2[g]	1.18	7.48
MC8×20	5.87	8.00	0.400	3/8	3/16	3.03	3	0.500	1/2	1 1/8	5 3/4	2[g]	1.03	7.50
×18.7	5.50	8.00	0.353	3/8	3/16	2.98	3	0.500	1/2	1 1/8	5 3/4	2[g]	1.02	7.50
MC8×8.5	2.50	8.00	0.179	3/16	1/8	1.87	1 7/8	0.311	5/16	13/16	6 3/8	1 1/8[g]	0.624	7.69

[c] Shape is slender for compression with $F_y = 36$ ksi.
[g] The actual size, combination and orientation of fastener components should be compared with the geometry of the cross section to ensure compatibility.
— Indicates flange is too narrow to establish a workable gage.

Table 1-6 (continued)
MC-Shapes
Properties

MC18-MC8

Nominal Wt.	Shear Ctr, e_o	Axis X-X				Axis Y-Y						Torsional Properties			
		I	S	r	Z	I	S	r	$\bar{x}$	Z	x_p	J	C_w	$\bar{r}_o$	H
lb/ft	in.	in.^{4}	in.^{3}	in.	in.^{3}	in.^{4}	in.^{3}	in.	in.	in.^{3}	in.	in.^{4}	in.^{6}	in.	
58	0.695	675	75.0	6.29	95.4	17.6	5.28	1.02	0.862	10.7	0.474	2.81	1070	6.56	0.944
51.9	0.797	627	69.6	6.41	87.3	16.3	5.02	1.03	0.858	9.86	0.424	2.03	985	6.70	0.939
45.8	0.909	578	64.2	6.55	79.2	14.9	4.77	1.05	0.866	9.14	0.374	1.45	897	6.87	0.933
42.7	0.969	554	61.5	6.64	75.1	14.3	4.64	1.07	0.877	8.82	0.349	1.23	852	6.97	0.930
50	0.815	314	48.3	4.62	60.8	16.4	4.77	1.06	0.974	10.2	0.566	2.96	558	5.07	0.875
40	1.03	273	41.9	4.82	51.2	13.7	4.24	1.08	0.963	8.66	0.452	1.55	462	5.32	0.859
35	1.16	252	38.8	4.95	46.5	12.3	3.97	1.09	0.980	8.04	0.396	1.13	412	5.50	0.849
31.8	1.24	239	36.7	5.05	43.4	11.4	3.79	1.10	1.00	7.69	0.360	0.937	380	5.64	0.842
50	0.741	269	44.9	4.28	56.5	17.4	5.64	1.09	1.05	10.9	0.613	3.23	411	4.77	0.859
45	0.844	251	41.9	4.36	52.0	15.8	5.30	1.09	1.04	10.1	0.550	2.33	373	4.88	0.851
40	0.952	234	39.0	4.46	47.7	14.2	4.98	1.10	1.04	9.31	0.490	1.69	336	5.01	0.842
35	1.07	216	36.0	4.59	43.2	12.6	4.64	1.11	1.05	8.62	0.428	1.24	297	5.18	0.831
31	1.17	202	33.7	4.71	39.7	11.3	4.37	1.11	1.08	8.15	0.425	1.00	267	5.34	0.822
14.3	0.435	76.1	12.7	4.27	15.9	1.00	0.574	0.489	0.377	1.21	0.174	0.117	32.8	4.37	0.965
10.6	0.284	55.3	9.22	4.22	11.6	0.378	0.307	0.349	0.269	0.635	0.129	0.0596	11.7	4.27	0.983
41.1	0.864	157	31.5	3.61	39.3	15.7	4.85	1.14	1.09	9.49	0.604	2.26	269	4.26	0.790
33.6	1.06	139	27.8	3.75	33.7	13.1	4.35	1.15	1.09	8.28	0.494	1.20	224	4.47	0.770
28.5	1.21	126	25.3	3.89	30.0	11.3	3.99	1.16	1.12	7.59	0.419	0.791	193	4.68	0.752
25	1.03	110	22.0	3.87	26.2	7.25	2.96	0.993	0.953	5.65	0.367	0.638	124	4.46	0.803
22	1.12	102	20.5	3.99	23.9	6.40	2.75	0.997	0.990	5.29	0.467	0.510	110	4.62	0.791
8.4	0.332	31.9	6.39	3.61	7.92	0.326	0.268	0.364	0.284	0.548	0.123	0.0413	7.00	3.68	0.972
6.5	0.182	22.9	4.59	3.43	5.90	0.133	0.137	0.262	0.194	0.284	0.0975	0.0191	2.76	3.46	0.988
25.4	0.986	87.9	19.5	3.43	23.5	7.57	2.99	1.01	0.970	5.70	0.415	0.691	104	4.08	0.770
23.9	1.04	84.9	18.9	3.48	22.5	7.14	2.89	1.01	0.981	5.51	0.390	0.599	98.0	4.15	0.763
22.8	1.04	63.8	15.9	3.09	19.1	7.01	2.81	1.02	1.01	5.37	0.419	0.572	75.2	3.84	0.715
21.4	1.09	61.5	15.4	3.13	18.2	6.58	2.71	1.02	1.02	5.18	0.452	0.495	70.8	3.91	0.707
20	0.843	54.4	13.6	3.04	16.4	4.42	2.02	0.867	0.840	3.86	0.367	0.441	47.8	3.58	0.779
18.7	0.889	52.4	13.1	3.09	15.6	4.15	1.95	0.868	0.849	3.72	0.344	0.380	45.0	3.65	0.773
8.5	0.542	23.3	5.82	3.05	6.95	0.624	0.431	0.500	0.428	0.875	0.156	0.0587	8.21	3.24	0.910

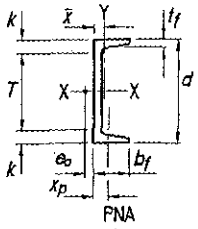

Table 1-6 (continued)
MC-Shapes
Dimensions

Shape	Area, A	Depth, d		Web Thickness, t_w		$\frac{t_w}{2}$	Flange Width, b_f		Flange Average Thickness, t_f		Distance k	Distance T	Distance Workable Gage	r_{ts}	h_o
	in.^{2}	in.		in.		in.	in.		in.		in.	in.	in.	in.	in.
MC7×22.7	6.67	7.00	7	0.503	1/2	1/4	3.60	3 5/8	0.500	1/2	1 1/8	4 3/4	2[g]	1.23	6.50
×19.1	5.61	7.00	7	0.352	3/8	3/16	3.45	3 1/2	0.500	1/2	1 1/8	4 3/4	2[g]	1.19	6.50
MC6×18	5.29	6.00	6	0.379	3/8	3/16	3.50	3 1/2	0.475	1/2	1 1/16	3 7/8	2[g]	1.20	5.53
×15.3	4.49	6.00	6	0.340	5/16	3/16	3.50	3 1/2	0.385	3/8	7/8	4 1/4	2[g]	1.20	5.62
MC6×16.3	4.79	6.00	6	0.375	3/8	3/16	3.00	3	0.475	1/2	1 1/16	3 7/8	1 3/4[g]	1.03	5.53
×15.1	4.44	6.00	6	0.316	5/16	3/16	2.94	3	0.475	1/2	1 1/16	3 7/8	1 3/4[g]	1.01	5.53
MC6×12	3.53	6.00	6	0.310	5/16	3/16	2.50	2 1/2	0.375	3/8	7/8	4 1/4	1 1/2[g]	0.856	5.63
MC6×7	2.09	6.00	6	0.179	3/16	1/8	1.88	1 7/8	0.291	5/16	3/4	4 1/2	—	0.638	5.71
×6.5	1.95	6.00	6	0.155	1/8	1/16	1.85	1 7/8	0.291	5/16	3/4	4 1/2	—	0.631	5.71
MC4×13.8	4.03	4.00	4	0.500	1/2	1/4	2.50	2 1/2	0.500	1/2	1	2	—	0.851	3.50
MC3×7.1	2.11	3.00	3	0.312	5/16	3/16	1.94	2	0.351	3/8	13/16	1 3/8	—	0.657	2.65

[g] The actual size, combination and orientation of fastener components should be compared with the geometry of the cross section to ensure compatibility.
— Indicates flange is too narrow to establish a workable gage.

Table 1-6 (continued)
MC-Shapes
Properties

MC7-MC3

Nominal Wt.	Shear Ctr, e_o	Axis X-X				Axis Y-Y						Torsional Properties			
		I	S	r	Z	I	S	r	$\bar{x}$	Z	x_p	J	C_w	$\bar{r}_o$	H
lb/ft	in.	in.^{4}	in.^{3}	in.	in.^{3}	in.^{4}	in.^{3}	in.	in.	in.^{3}	in.	in.^{4}	in.^{6}	in.	
22.7	1.01	47.4	13.5	2.67	16.4	7.24	2.83	1.04	1.04	5.38	0.477	0.625	58.3	3.53	0.659
19.1	1.15	43.1	12.3	2.77	14.5	6.06	2.55	1.04	1.08	4.85	0.579	0.407	49.3	3.70	0.638
18	1.17	29.7	9.89	2.37	11.7	5.88	2.47	1.05	1.12	4.68	0.644	0.379	34.6	3.46	0.563
15.3	1.16	25.3	8.44	2.38	9.91	4.91	2.01	1.05	1.05	3.85	0.511	0.223	30.0	3.41	0.579
16.3	0.930	26.0	8.66	2.33	10.4	3.77	1.82	0.887	0.927	3.47	0.465	0.336	22.1	3.11	0.643
15.1	0.982	24.9	8.30	2.37	9.83	3.46	1.73	0.883	0.940	3.30	0.543	0.285	20.5	3.18	0.634
12	0.725	18.7	6.24	2.30	7.47	1.85	1.03	0.724	0.704	1.97	0.294	0.155	11.3	2.80	0.740
7	0.583	11.4	3.81	2.34	4.50	0.603	0.439	0.537	0.501	0.865	0.174	0.0464	4.00	2.63	0.830
6.5	0.612	11.0	3.66	2.38	4.28	0.565	0.422	0.539	0.513	0.836	0.191	0.0412	3.75	2.68	0.824
13.8	0.643	8.85	4.43	1.48	5.53	2.13	1.29	0.727	0.849	2.40	0.508	0.373	4.84	2.23	0.550
7.1	0.574	2.72	1.81	1.14	2.24	0.666	0.518	0.562	0.653	0.998	0.414	0.0928	0.915	1.76	0.516

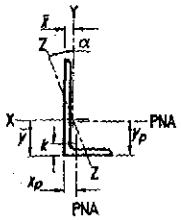

Table 1-7
Angles
Properties

Shape	k	Wt.	Area, A	Axis X-X						Flexural-Torsional Properties		
				I	S	r	$\bar{y}$	Z	y_p	J	C_w	$\bar{r}_o$
	in.	lb/ft	in.^{2}	in.^{4}	in.^{3}	in.	in.	in.^{3}	in.	in.^{4}	in.^{6}	in.
L8×8×1 1/8	1 3/4	56.9	16.8	98.1	17.5	2.41	2.40	31.6	1.05	7.13	32.5	4.29
×1	1 5/8	51.0	15.1	89.1	15.8	2.43	2.36	28.5	0.944	5.08	23.4	4.32
×7/8	1 1/2	45.0	13.3	79.7	14.0	2.45	2.31	25.3	0.831	3.46	16.1	4.36
×3/4	1 3/8	38.9	11.5	69.9	12.2	2.46	2.26	22.0	0.719	2.21	10.4	4.39
×5/8	1 1/4	32.7	9.69	59.6	10.3	2.48	2.21	18.6	0.606	1.30	6.16	4.42
×9/16	1 3/16	29.6	8.77	54.2	9.33	2.49	2.19	16.8	0.548	0.961	4.55	4.43
×1/2	1 1/8	26.4	7.84	48.8	8.36	2.49	2.17	15.1	0.490	0.683	3.23	4.45
L8×6×1	1 1/2	44.2	13.1	80.9	15.1	2.49	2.65	27.3	1.45	4.34	16.3	3.88
×7/8	1 3/8	39.1	11.5	72.4	13.4	2.50	2.60	24.3	1.43	2.96	11.3	3.92
×3/4	1 1/4	33.8	9.99	63.5	11.7	2.52	2.55	21.1	1.34	1.90	7.28	3.95
×5/8	1 1/8	28.5	8.41	54.2	9.86	2.54	2.50	17.9	1.27	1.12	4.33	3.98
×9/16	1 1/16	25.7	7.61	49.4	8.94	2.55	2.48	16.2	1.24	0.823	3.20	3.99
×1/2	1	23.0	6.80	44.4	8.01	2.55	2.46	14.6	1.20	0.584	2.28	4.01
×7/16	15/16	20.2	5.99	39.3	7.06	2.56	2.43	12.9	1.15	0.396	1.55	4.02
L8×4×1	1 1/2	37.4	11.1	69.7	14.0	2.51	3.03	24.3	2.45	3.68	12.9	3.75
×7/8	1 3/8	33.1	9.79	62.6	12.5	2.53	2.99	21.7	2.41	2.51	8.89	3.78
×3/4	1 1/4	28.7	8.49	55.0	10.9	2.55	2.94	18.9	2.34	1.61	5.75	3.80
×5/8	1 1/8	24.2	7.16	47.0	9.20	2.56	2.89	16.1	2.27	0.955	3.42	3.83
×9/16	1 1/16	21.9	6.49	42.9	8.34	2.57	2.86	14.6	2.23	0.704	2.53	3.84
×1/2	1	19.6	5.80	38.6	7.48	2.58	2.84	13.1	2.20	0.501	1.80	3.86
×7/16	15/16	17.2	5.11	34.2	6.59	2.59	2.81	11.6	2.16	0.340	1.22	3.87
L7×4×3/4	1 1/4	26.2	7.74	37.8	8.39	2.21	2.50	14.8	1.84	1.47	3.97	3.31
×5/8	1 1/8	22.1	6.50	32.4	7.12	2.23	2.45	12.5	1.80	0.868	2.37	3.34
×1/2	1	17.9	5.26	26.6	5.79	2.25	2.40	10.2	1.74	0.456	1.25	3.37
×7/16	15/16	15.7	4.63	23.6	5.11	2.26	2.38	9.03	1.71	0.310	0.851	3.38
×3/8	7/8	13.6	4.00	20.5	4.42	2.27	2.35	7.81	1.67	0.198	0.544	3.40
L6×6×1	1 1/2	37.4	11.0	35.4	8.55	1.79	1.86	15.4	0.917	3.68	9.24	3.18
×7/8	1 3/8	33.1	9.75	31.9	7.61	1.81	1.81	13.7	0.813	2.51	6.41	3.21
×3/4	1 1/4	28.7	8.46	28.1	6.64	1.82	1.77	11.9	0.705	1.61	4.17	3.24
×5/8	1 1/8	24.2	7.13	24.1	5.64	1.84	1.72	10.1	0.594	0.955	2.50	3.28
×9/16	1 1/16	21.9	6.45	22.0	5.12	1.85	1.70	9.18	0.538	0.704	1.85	3.29
×1/2	1	19.6	5.77	19.9	4.59	1.86	1.67	8.22	0.481	0.501	1.32	3.31
×7/16	15/16	17.2	5.08	17.6	4.06	1.86	1.65	7.25	0.423	0.340	0.899	3.32
×3/8	7/8	14.9	4.38	15.4	3.51	1.87	1.62	6.27	0.365	0.218	0.575	3.34
×5/16	13/16	12.4	3.67	13.0	2.95	1.88	1.60	5.26	0.306	0.129	0.338	3.35

Note: For workable gages, refer to Table 1-7A. For compactness criteria, refer to Table 1-7B.

Table 1-7 (continued)
Angles
Properties

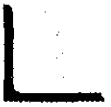

L8-L6

Shape	Axis Y-Y						Axis Z-Z				Q_s
	I	S	r	$\bar{x}$	Z	x_p	I	S	r	Tan α	$F_y = 36$ ksi
	in.^{4}	in.^{3}	in.	in.	in.^{3}	in.	in.^{4}	in.^{3}	in.		
L8×8×1 1/8	98.1	17.5	2.41	2.40	31.6	1.05	40.9	12.0	1.56	1.00	1.00
×1	89.1	15.8	2.43	2.36	28.5	0.944	36.8	11.0	1.56	1.00	1.00
×7/8	79.7	14.0	2.45	2.31	25.3	0.831	32.7	10.0	1.57	1.00	1.00
×3/4	69.9	12.2	2.46	2.26	22.0	0.719	28.5	8.90	1.57	1.00	1.00
×5/8	59.6	10.3	2.48	2.21	18.6	0.606	24.2	7.72	1.58	1.00	0.997
×9/16	54.2	9.33	2.49	2.19	16.8	0.548	22.0	7.09	1.58	1.00	0.959
×1/2	48.8	8.36	2.49	2.17	15.1	0.490	19.7	6.44	1.59	1.00	0.912
L8×6×1	38.8	8.92	1.72	1.65	16.2	0.819	21.3	7.60	1.28	0.542	1.00
×7/8	34.9	7.94	1.74	1.60	14.4	0.719	18.9	6.71	1.28	0.546	1.00
×3/4	30.8	6.92	1.75	1.56	12.5	0.624	16.5	5.82	1.29	0.550	1.00
×5/8	26.4	5.88	1.77	1.51	10.5	0.526	14.1	4.91	1.29	0.554	0.997
×9/16	24.1	5.34	1.78	1.49	9.52	0.476	12.8	4.45	1.30	0.556	0.959
×1/2	21.7	4.79	1.79	1.46	8.52	0.425	11.5	3.98	1.30	0.557	0.912
×7/16	19.3	4.23	1.80	1.44	7.50	0.374	10.2	3.51	1.31	0.559	0.850
L8×4×1	11.6	3.94	1.03	1.04	7.73	0.694	7.87	3.48	0.844	0.247	1.00
×7/8	10.5	3.51	1.04	0.997	6.77	0.612	7.01	3.06	0.846	0.252	1.00
×3/4	9.37	3.07	1.05	0.949	5.82	0.531	6.13	2.65	0.850	0.257	1.00
×5/8	8.11	2.62	1.06	0.902	4.86	0.448	5.24	2.24	0.856	0.262	0.997
×9/16	7.44	2.38	1.07	0.878	4.39	0.406	4.79	2.03	0.859	0.264	0.959
×1/2	6.75	2.15	1.08	0.854	3.91	0.363	4.32	1.82	0.863	0.266	0.912
×7/16	6.03	1.90	1.09	0.829	3.42	0.319	3.84	1.61	0.867	0.268	0.850
L7×4×3/4	9.00	3.01	1.08	1.00	5.60	0.553	5.64	2.57	0.855	0.324	1.00
×5/8	7.79	2.56	1.10	0.958	4.69	0.464	4.80	2.16	0.860	0.329	1.00
×1/2	6.48	2.10	1.11	0.910	3.77	0.376	3.95	1.76	0.866	0.334	0.965
×7/16	5.79	1.86	1.12	0.886	3.31	0.331	3.50	1.55	0.869	0.337	0.912
×3/8	5.06	1.61	1.12	0.861	2.84	0.286	3.05	1.34	0.873	0.339	0.840
L6×6×1	35.4	8.55	1.79	1.86	15.4	0.917	15.0	5.70	1.17	1.00	1.00
×7/8	31.9	7.61	1.81	1.81	13.7	0.813	13.3	5.18	1.17	1.00	1.00
×3/4	28.1	6.64	1.82	1.77	11.9	0.705	11.6	4.63	1.17	1.00	1.00
×5/8	24.1	5.64	1.84	1.72	10.1	0.594	9.83	4.04	1.17	1.00	1.00
×9/16	22.0	5.12	1.85	1.70	9.18	0.538	8.94	3.73	1.18	1.00	1.00
×1/2	19.9	4.59	1.86	1.67	8.22	0.481	8.04	3.40	1.18	1.00	1.00
×7/16	17.6	4.06	1.86	1.65	7.25	0.423	7.11	3.05	1.18	1.00	0.973
×3/8	15.4	3.51	1.87	1.62	6.27	0.365	6.17	2.69	1.19	1.00	0.912
×5/16	13.0	2.95	1.88	1.60	5.26	0.306	5.20	2.30	1.19	1.00	0.826

Note: For workable gages, refer to Table 1-7A. For compactness criteria, refer to Table 1-7B.

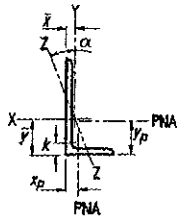

Table 1-7 (continued)
Angles
Properties

Shape	k	Wt.	Area, A	Axis X-X						Flexural-Torsional Properties		
				I	S	r	ȳ	Z	y_p	J	C_w	$\bar{r}_o$
	in.	lb/ft	in.²	in.⁴	in.³	in.	in.	in.³	in.	in.⁴	in.⁶	in.
L6×4×⅞	1⅜	27.2	8.00	27.7	7.13	1.86	2.12	12.7	1.43	2.03	4.04	2.82
×¾	1¼	23.6	6.94	24.5	6.23	1.88	2.07	11.1	1.37	1.31	2.64	2.85
×⅝	1⅛	20.0	5.86	21.0	5.29	1.89	2.03	9.44	1.31	0.775	1.59	2.88
×9/16	1 1/16	18.1	5.31	19.2	4.81	1.90	2.00	8.59	1.28	0.572	1.18	2.90
×½	1	16.2	4.75	17.3	4.31	1.91	1.98	7.71	1.25	0.407	0.843	2.91
×7/16	15/16	14.3	4.18	15.4	3.81	1.92	1.95	6.81	1.22	0.276	0.575	2.93
×⅜	⅞	12.3	3.61	13.4	3.30	1.93	1.93	5.89	1.19	0.177	0.369	2.94
×5/16	13/16	10.3	3.03	11.4	2.77	1.94	1.90	4.96	1.15	0.104	0.217	2.96
L6×3½×½	1	15.3	4.50	16.6	4.23	1.92	2.07	7.49	1.50	0.386	0.779	2.88
×⅜	⅞	11.7	3.44	12.9	3.23	1.93	2.02	5.74	1.41	0.168	0.341	2.90
×5/16	13/16	9.80	2.89	10.9	2.72	1.94	2.00	4.84	1.38	0.0990	0.201	2.92
L5×5×⅞	1⅜	27.2	8.00	17.8	5.16	1.49	1.56	9.31	0.800	2.07	3.53	2.64
×¾	1¼	23.6	6.98	15.7	4.52	1.50	1.52	8.14	0.698	1.33	2.32	2.67
×⅝	1⅛	20.0	5.90	13.6	3.85	1.52	1.47	6.93	0.590	0.792	1.40	2.70
×½	1	16.2	4.79	11.3	3.15	1.53	1.42	5.66	0.479	0.417	0.744	2.73
×7/16	15/16	14.3	4.22	10.0	2.78	1.54	1.40	5.00	0.422	0.284	0.508	2.74
×⅜	⅞	12.3	3.65	8.76	2.41	1.55	1.37	4.33	0.365	0.183	0.327	2.76
×5/16	13/16	10.3	3.07	7.44	2.04	1.56	1.35	3.65	0.307	0.108	0.193	2.77
L5×3½×¾	1 3/16	19.8	5.85	13.9	4.26	1.55	1.74	7.60	1.10	1.09	1.52	2.36
×⅝	1 1/16	16.8	4.93	12.0	3.63	1.56	1.69	6.50	1.06	0.651	0.918	2.39
×½	15/16	13.6	4.00	10.0	2.97	1.58	1.65	5.33	1.00	0.343	0.491	2.42
×⅜	13/16	10.4	3.05	7.75	2.28	1.59	1.60	4.09	0.933	0.150	0.217	2.45
×5/16	¾	8.70	2.56	6.58	1.92	1.60	1.57	3.45	0.904	0.0883	0.128	2.47
×¼	11/16	7.00	2.07	5.36	1.55	1.61	1.55	2.78	0.860	0.0464	0.0670	2.48
L5×3×½	15/16	12.8	3.75	9.43	2.89	1.58	1.74	5.12	1.25	0.322	0.444	2.38
×7/16	⅞	11.3	3.31	8.41	2.56	1.59	1.72	4.53	1.22	0.220	0.304	2.39
×⅜	13/16	9.80	2.86	7.35	2.22	1.60	1.69	3.93	1.19	0.141	0.196	2.41
×5/16	¾	8.20	2.41	6.24	1.87	1.61	1.67	3.32	1.14	0.0832	0.116	2.42
×¼	11/16	6.60	1.94	5.09	1.51	1.62	1.64	2.68	1.12	0.0438	0.0606	2.43
L4×4×¾	1⅛	18.5	5.44	7.62	2.79	1.18	1.27	5.02	0.680	1.02	1.12	2.10
×⅝	1	15.7	4.61	6.62	2.38	1.20	1.22	4.28	0.576	0.610	0.680	2.13
×½	⅞	12.8	3.75	5.52	1.96	1.21	1.18	3.50	0.469	0.322	0.366	2.16
×7/16	13/16	11.3	3.30	4.93	1.73	1.22	1.15	3.10	0.413	0.220	0.252	2.18
×⅜	¾	9.80	2.86	4.32	1.50	1.23	1.13	2.69	0.358	0.141	0.162	2.19
×5/16	11/16	8.20	2.40	3.67	1.27	1.24	1.11	2.26	0.300	0.0832	0.0963	2.21
×¼	⅝	6.60	1.93	3.00	1.03	1.25	1.08	1.82	0.241	0.0438	0.0505	2.22

Note: For workable gages, refer to Table 1-7A. For compactness criteria, refer to Table 1-7B.

Table 1-7 (continued)
Angles
Properties

L6-L4

Shape	Axis Y-Y						Axis Z-Z				Q_s
	I	S	r	$\bar{x}$	Z	x_p	I	S	r	Tan α	$F_y = 36$ ksi
	in.^{4}	in.^{3}	in.	in.	in.^{3}	in.	in.^{4}	in.^{3}	in.		
L6×4×7/8	9.70	3.37	1.10	1.12	6.26	0.667	5.82	2.91	0.854	0.421	1.00
×3/4	8.63	2.95	1.12	1.07	5.42	0.578	5.08	2.51	0.856	0.428	1.00
×5/8	7.48	2.52	1.13	1.03	4.56	0.488	4.32	2.12	0.859	0.435	1.00
×9/16	6.86	2.29	1.14	1.00	4.13	0.443	3.94	1.92	0.861	0.438	1.00
×1/2	6.22	2.06	1.14	0.981	3.69	0.396	3.55	1.72	0.864	0.440	1.00
×7/16	5.56	1.83	1.15	0.957	3.24	0.348	3.14	1.51	0.867	0.443	0.973
×3/8	4.86	1.58	1.16	0.933	2.79	0.301	2.73	1.31	0.870	0.446	0.912
×5/16	4.13	1.34	1.17	0.908	2.33	0.253	2.31	1.10	0.874	0.449	0.826
L6×3 1/2×1/2	4.24	1.59	0.968	0.829	2.88	0.375	2.58	1.34	0.756	0.343	1.00
×3/8	3.33	1.22	0.984	0.781	2.18	0.287	2.00	1.02	0.763	0.349	0.912
×5/16	2.84	1.03	0.991	0.756	1.82	0.241	1.70	0.859	0.767	0.352	0.826
L5×5×7/8	17.8	5.16	1.49	1.56	9.31	0.800	7.56	3.43	0.971	1.00	1.00
×3/4	15.7	4.52	1.50	1.52	8.14	0.698	6.59	3.08	0.972	1.00	1.00
×5/8	13.6	3.85	1.52	1.47	6.93	0.590	5.61	2.70	0.975	1.00	1.00
×1/2	11.3	3.15	1.53	1.42	5.66	0.479	4.60	2.29	0.980	1.00	1.00
×7/16	10.0	2.78	1.54	1.40	5.00	0.422	4.08	2.06	0.983	1.00	1.00
×3/8	8.76	2.41	1.55	1.37	4.33	0.365	3.55	1.83	0.986	1.00	0.983
×5/16	7.44	2.04	1.56	1.35	3.65	0.307	3.01	1.58	0.990	1.00	0.912
L5×3 1/2×3/4	5.52	2.20	0.974	0.993	4.07	0.585	3.22	1.90	0.744	0.464	1.00
×5/8	4.80	1.88	0.987	0.947	3.43	0.493	2.74	1.60	0.746	0.472	1.00
×1/2	4.02	1.55	1.00	0.901	2.79	0.400	2.25	1.29	0.750	0.479	1.00
×3/8	3.15	1.19	1.02	0.854	2.12	0.305	1.74	0.985	0.755	0.485	0.983
×5/16	2.69	1.01	1.02	0.829	1.77	0.256	1.47	0.827	0.758	0.489	0.912
×1/4	2.20	0.816	1.03	0.804	1.42	0.207	1.19	0.667	0.761	0.491	0.804
L5×3×1/2	2.55	1.13	0.824	0.746	2.08	0.375	1.55	0.953	0.642	0.357	1.00
×7/16	2.29	1.00	0.831	0.722	1.82	0.331	1.37	0.840	0.644	0.361	1.00
×3/8	2.01	0.874	0.838	0.698	1.57	0.286	1.20	0.726	0.646	0.364	0.983
×5/16	1.72	0.739	0.846	0.673	1.31	0.241	1.01	0.610	0.649	0.368	0.912
×1/4	1.41	0.600	0.853	0.648	1.05	0.194	0.825	0.491	0.652	0.371	0.804
L4×4×3/4	7.62	2.79	1.18	1.27	5.02	0.680	3.25	1.81	0.774	1.00	1.00
×5/8	6.62	2.38	1.20	1.22	4.28	0.576	2.76	1.59	0.774	1.00	1.00
×1/2	5.52	1.96	1.21	1.18	3.50	0.469	2.25	1.35	0.776	1.00	1.00
×7/16	4.93	1.73	1.22	1.15	3.10	0.413	2.00	1.22	0.777	1.00	1.00
×3/8	4.32	1.50	1.23	1.13	2.69	0.358	1.73	1.08	0.779	1.00	1.00
×5/16	3.67	1.27	1.24	1.11	2.26	0.300	1.46	0.936	0.781	1.00	0.997
×1/4	3.00	1.03	1.25	1.08	1.82	0.241	1.18	0.776	0.783	1.00	0.912

Note: For workable gages, refer to Table 1-7A. For compactness criteria, refer to Table 1-7B.

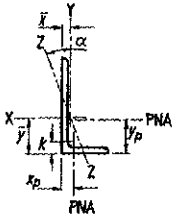

Table 1-7 (continued)
Angles
Properties

Shape	k	Wt.	Area, A	Axis X-X						Flexural-Torsional Properties		
				I	S	r	$\bar{y}$	Z	y_p	J	C_w	$\bar{r}_o$
	in.	lb/ft	in.^{2}	in.^{4}	in.^{3}	in.	in.	in.^{3}	in.	in.^{4}	in.^{6}	in.
L4×3½×½	7/8	11.9	3.50	5.30	1.92	1.23	1.24	3.46	0.500	0.301	0.302	2.03
×3/8	3/4	9.10	2.68	4.15	1.48	1.25	1.20	2.66	0.427	0.132	0.134	2.06
×5/16	11/16	7.70	2.25	3.53	1.25	1.25	1.17	2.24	0.400	0.0782	0.0798	2.08
×¼	5/8	6.20	1.82	2.89	1.01	1.26	1.14	1.81	0.360	0.0412	0.0419	2.09
L4×3×5/8	1	13.6	3.99	6.01	2.28	1.23	1.37	4.08	0.808	0.529	0.472	1.91
×½	7/8	11.1	3.25	5.02	1.87	1.24	1.32	3.36	0.750	0.281	0.255	1.94
×3/8	3/4	8.50	2.49	3.94	1.44	1.26	1.27	2.60	0.680	0.123	0.114	1.97
×5/16	11/16	7.20	2.09	3.36	1.22	1.27	1.25	2.19	0.656	0.0731	0.0676	1.98
×¼	5/8	5.80	1.69	2.75	0.988	1.27	1.22	1.77	0.620	0.0386	0.0356	1.99
L3½×3½×½	7/8	11.1	3.25	3.63	1.48	1.05	1.05	2.66	0.464	0.281	0.238	1.87
×7/16	13/16	9.80	2.89	3.25	1.32	1.06	1.03	2.36	0.413	0.192	0.164	1.89
×3/8	3/4	8.50	2.50	2.86	1.15	1.07	1.00	2.06	0.357	0.123	0.106	1.90
×5/16	11/16	7.20	2.10	2.44	0.969	1.08	0.979	1.74	0.300	0.0731	0.0634	1.92
×¼	5/8	5.80	1.70	2.00	0.787	1.09	0.954	1.41	0.243	0.0386	0.0334	1.93
L3½×3×½	7/8	10.2	3.02	3.45	1.45	1.07	1.12	2.61	0.480	0.260	0.191	1.75
×7/16	13/16	9.10	2.67	3.10	1.29	1.08	1.09	2.32	0.449	0.178	0.132	1.76
×3/8	3/4	7.90	2.32	2.73	1.12	1.09	1.07	2.03	0.407	0.114	0.0858	1.78
×5/16	11/16	6.60	1.95	2.33	0.951	1.09	1.05	1.72	0.380	0.0680	0.0512	1.79
×¼	5/8	5.40	1.58	1.92	0.773	1.10	1.02	1.39	0.340	0.0360	0.0270	1.80
L3½×2½×½	7/8	9.40	2.77	3.24	1.41	1.08	1.20	2.52	0.730	0.234	0.159	1.66
×3/8	3/4	7.20	2.12	2.56	1.09	1.10	1.15	1.96	0.673	0.103	0.0714	1.69
×5/16	11/16	6.10	1.79	2.20	0.925	1.11	1.13	1.67	0.636	0.0611	0.0426	1.71
×¼	5/8	4.90	1.45	1.81	0.753	1.12	1.10	1.36	0.600	0.0322	0.0225	1.72
L3×3×½	7/8	9.40	2.76	2.20	1.06	0.895	0.929	1.91	0.460	0.230	0.144	1.59
×7/16	13/16	8.30	2.43	1.98	0.946	0.903	0.907	1.70	0.405	0.157	0.100	1.60
×3/8	3/4	7.20	2.11	1.75	0.825	0.910	0.884	1.48	0.352	0.101	0.0652	1.62
×5/16	11/16	6.10	1.78	1.50	0.699	0.918	0.860	1.26	0.297	0.0597	0.0390	1.64
×¼	5/8	4.90	1.44	1.23	0.569	0.926	0.836	1.02	0.240	0.0313	0.0206	1.65
×3/16	9/16	3.71	1.09	0.948	0.433	0.933	0.812	0.774	0.182	0.0136	0.00899	1.67
L3×2½×½	7/8	8.50	2.50	2.07	1.03	0.910	0.995	1.86	0.500	0.213	0.112	1.46
×7/16	13/16	7.60	2.22	1.87	0.921	0.917	0.972	1.66	0.463	0.146	0.0777	1.48
×3/8	3/4	6.60	1.93	1.65	0.803	0.924	0.949	1.45	0.427	0.0943	0.0507	1.49
×5/16	11/16	5.60	1.63	1.41	0.681	0.932	0.925	1.23	0.392	0.0560	0.0304	1.51
×¼	5/8	4.50	1.32	1.16	0.555	0.940	0.900	1.000	0.360	0.0296	0.0161	1.52
×3/16	9/16	3.39	1.00	0.899	0.423	0.947	0.874	0.761	0.333	0.0130	0.00705	1.54

Note: For workable gages, refer to Table 1-7A. For compactness criteria, refer to Table 1-7B.

Table 1-7 (continued)
Angles
Properties

L4-L3

Shape	Axis Y-Y						Axis Z-Z				Q_s
	I	S	r	$\bar{x}$	Z	x_p	I	S	r	Tan α	$F_y=36$ ksi
	in.^{4}	in.^{3}	in.	in.	in.^{3}	in.	in.^{4}	in.^{3}	in.		
L4×3½×½	3.76	1.50	1.04	0.994	2.69	0.438	1.80	1.17	0.716	0.750	1.00
×⅜	2.96	1.16	1.05	0.947	2.06	0.335	1.38	0.938	0.719	0.755	1.00
×5/16	2.52	0.980	1.06	0.923	1.74	0.281	1.17	0.811	0.721	0.757	0.997
×¼	2.07	0.794	1.07	0.897	1.40	0.228	0.950	0.653	0.723	0.759	0.912
L4×3×⅝	2.85	1.34	0.845	0.867	2.45	0.499	1.59	1.13	0.631	0.534	1.00
×½	2.40	1.10	0.858	0.822	1.99	0.406	1.30	0.927	0.633	0.542	1.00
×⅜	1.89	0.851	0.873	0.775	1.52	0.311	1.01	0.705	0.636	0.551	1.00
×5/16	1.62	0.721	0.880	0.750	1.28	0.261	0.851	0.591	0.638	0.554	0.997
×¼	1.33	0.585	0.887	0.725	1.03	0.211	0.691	0.476	0.639	0.558	0.912
L3½×3½×½	3.63	1.48	1.05	1.05	2.66	0.464	1.51	1.01	0.679	1.00	1.00
×7/16	3.25	1.32	1.06	1.03	2.36	0.413	1.34	0.920	0.681	1.00	1.00
×⅜	2.86	1.15	1.07	1.00	2.06	0.357	1.17	0.821	0.683	1.00	1.00
×5/16	2.44	0.969	1.08	0.979	1.74	0.300	0.989	0.714	0.685	1.00	1.00
×¼	2.00	0.787	1.09	0.954	1.41	0.243	0.807	0.598	0.688	1.00	0.965
L3½×3×½	2.32	1.09	0.877	0.869	1.97	0.431	1.15	0.851	0.618	0.713	1.00
×7/16	2.09	0.971	0.885	0.846	1.75	0.381	1.03	0.774	0.620	0.717	1.00
×⅜	1.84	0.847	0.892	0.823	1.52	0.331	0.895	0.692	0.622	0.720	1.00
×5/16	1.58	0.718	0.900	0.798	1.28	0.279	0.761	0.602	0.624	0.722	1.00
×¼	1.30	0.585	0.908	0.773	1.04	0.226	0.623	0.487	0.628	0.725	0.965
L3½×2½×½	1.36	0.756	0.701	0.701	1.39	0.396	0.782	0.649	0.532	0.485	1.00
×⅜	1.09	0.589	0.716	0.655	1.07	0.303	0.608	0.496	0.535	0.495	1.00
×5/16	0.937	0.501	0.723	0.632	0.900	0.256	0.518	0.419	0.538	0.500	1.00
×¼	0.775	0.410	0.731	0.607	0.728	0.207	0.425	0.340	0.541	0.504	0.965
L3×3×½	2.20	1.06	0.895	0.929	1.91	0.460	0.924	0.703	0.580	1.00	1.00
×7/16	1.98	0.946	0.903	0.907	1.70	0.405	0.819	0.639	0.580	1.00	1.00
×⅜	1.75	0.825	0.910	0.884	1.48	0.352	0.712	0.570	0.581	1.00	1.00
×5/16	1.50	0.699	0.918	0.860	1.26	0.297	0.603	0.496	0.583	1.00	1.00
×¼	1.23	0.569	0.926	0.836	1.02	0.240	0.491	0.415	0.585	1.00	1.00
×3/16	0.948	0.433	0.933	0.812	0.774	0.182	0.374	0.326	0.586	1.00	0.912
L3×2½×½	1.29	0.736	0.718	0.746	1.34	0.417	0.666	0.568	0.516	0.666	1.00
×7/16	1.17	0.656	0.724	0.724	1.19	0.370	0.591	0.517	0.516	0.671	1.00
×⅜	1.03	0.573	0.731	0.701	1.03	0.322	0.514	0.463	0.517	0.675	1.00
×5/16	0.888	0.487	0.739	0.677	0.873	0.272	0.437	0.404	0.518	0.679	1.00
×¼	0.734	0.397	0.746	0.653	0.707	0.220	0.356	0.327	0.520	0.683	1.00
×3/16	0.568	0.303	0.753	0.627	0.536	0.167	0.272	0.247	0.521	0.687	0.912

Note: For workable gages, refer to Table 1-7A. For compactness criteria, refer to Table 1-7B.

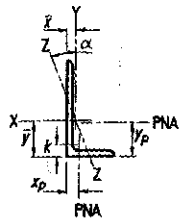

Table 1-7 (continued)
Angles
Properties

Shape	k	Wt.	Area, A	Axis X-X						Flexural-Torsional Properties		
				I	S	r	$\bar{y}$	Z	y_p	J	C_w	$\bar{r}_o$
	in.	lb/ft	in.^{2}	in.^{4}	in.^{3}	in.	in.	in.^{3}	in.	in.^{4}	in.^{6}	in.
L3×2×1/2	13/16	7.70	2.26	1.92	1.00	0.922	1.08	1.78	0.740	0.192	0.0908	1.39
×3/8	11/16	5.90	1.75	1.54	0.779	0.937	1.03	1.39	0.667	0.0855	0.0413	1.42
×5/16	5/8	5.00	1.48	1.32	0.662	0.945	1.01	1.19	0.632	0.0510	0.0248	1.43
×1/4	9/16	4.10	1.20	1.09	0.541	0.953	0.980	0.969	0.600	0.0270	0.0132	1.45
×3/16	1/2	3.07	0.917	0.847	0.414	0.961	0.952	0.743	0.555	0.0119	0.00576	1.46
L2 1/2×2 1/2×1/2	3/4	7.70	2.26	1.22	0.716	0.735	0.803	1.29	0.452	0.188	0.0791	1.30
×3/8	5/8	5.90	1.73	0.972	0.568	0.749	0.758	1.01	0.346	0.0833	0.0362	1.33
×5/16	9/16	5.00	1.46	0.837	0.474	0.756	0.735	0.853	0.292	0.0495	0.0218	1.35
×1/4	1/2	4.10	1.19	0.692	0.387	0.764	0.711	0.695	0.238	0.0261	0.0116	1.36
×3/16	7/16	3.07	0.901	0.535	0.295	0.771	0.687	0.529	0.180	0.0114	0.00510	1.38
L2 1/2×2×3/8	5/8	5.30	1.55	0.914	0.546	0.766	0.826	0.982	0.433	0.0746	0.0268	1.22
×5/16	9/16	4.50	1.32	0.790	0.465	0.774	0.803	0.839	0.388	0.0444	0.0162	1.23
×1/4	1/2	3.62	1.07	0.656	0.381	0.782	0.779	0.688	0.360	0.0235	0.00868	1.25
×3/16	7/16	2.75	0.818	0.511	0.293	0.790	0.754	0.529	0.319	0.0103	0.00382	1.26
L2 1/2×1 1/2×1/4	1/2	3.19	0.947	0.594	0.364	0.792	0.866	0.644	0.606	0.0209	0.00694	1.19
×3/16	7/16	2.44	0.724	0.464	0.280	0.801	0.839	0.497	0.569	0.00921	0.00306	1.20
L2×2×3/8	5/8	4.70	1.37	0.476	0.348	0.591	0.632	0.629	0.343	0.0658	0.0174	1.05
×5/16	9/16	3.92	1.16	0.414	0.298	0.598	0.609	0.537	0.290	0.0393	0.0106	1.06
×1/4	1/2	3.19	0.944	0.346	0.244	0.605	0.586	0.440	0.236	0.0209	0.00572	1.08
×3/16	7/16	2.44	0.722	0.271	0.188	0.612	0.561	0.338	0.181	0.00921	0.00254	1.09
×1/8	3/8	1.65	0.491	0.189	0.129	0.620	0.534	0.230	0.123	0.00293	0.000789	1.10

Table 1-7A
Workable Gages in Angle Legs, in.

Leg	8	7	6	5	4	3 1/2	3	2 1/2	2	1 3/4	1 1/2	1 3/8	1 1/4	1
g	4 1/2	4	3 1/2	3	2 1/2	2	1 3/4	1 3/8	1 1/8	1	7/8	7/8	3/4	5/8
g_1	3	2 1/2	2 1/4	2										
g_2	3	3	2 1/2	1 3/4										

Note: Other gages are permitted to suit specific requirements subject to clearances and edge distance limitations.

Table 1-7 (continued)
Angles
Properties

L3-L2

Shape	Axis Y-Y						Axis Z-Z				Q_s
	I	S	r	$\bar{x}$	Z	x_p	I	S	r	Tan α	$F_y = 36$ ksi
	in.^{4}	in.^{3}	in.	in.	in.^{3}	in.	in.^{4}	in.^{3}	in.		
L3×2×1/2	0.667	0.470	0.543	0.580	0.887	0.377	0.409	0.411	0.425	0.413	1.00
×3/8	0.539	0.368	0.555	0.535	0.679	0.292	0.318	0.313	0.426	0.426	1.00
×5/16	0.467	0.314	0.562	0.511	0.572	0.247	0.271	0.264	0.428	0.432	1.00
×1/4	0.390	0.258	0.569	0.487	0.463	0.200	0.223	0.214	0.431	0.437	1.00
×3/16	0.305	0.198	0.577	0.462	0.351	0.153	0.173	0.163	0.435	0.442	0.912
L2 1/2×2 1/2×1/2	1.22	0.716	0.735	0.803	1.29	0.452	0.521	0.459	0.481	1.00	1.00
×3/8	0.972	0.558	0.749	0.758	1.01	0.346	0.400	0.373	0.481	1.00	1.00
×5/16	0.837	0.474	0.756	0.735	0.853	0.292	0.339	0.326	0.481	1.00	1.00
×1/4	0.692	0.387	0.764	0.711	0.695	0.238	0.275	0.274	0.482	1.00	1.00
×3/16	0.535	0.295	0.771	0.687	0.529	0.180	0.210	0.216	0.482	1.00	0.983
L2 1/2×2×3/8	0.513	0.361	0.574	0.578	0.657	0.310	0.273	0.295	0.419	0.612	1.00
×5/16	0.446	0.309	0.581	0.555	0.557	0.264	0.233	0.260	0.420	0.618	1.00
×1/4	0.372	0.253	0.589	0.532	0.454	0.214	0.191	0.213	0.423	0.624	1.00
×3/16	0.292	0.195	0.597	0.508	0.347	0.164	0.149	0.163	0.426	0.628	0.983
L2 1/2×1 1/2×1/4	0.160	0.142	0.411	0.372	0.261	0.189	0.0975	0.119	0.321	0.354	1.00
×3/16	0.126	0.110	0.418	0.347	0.198	0.145	0.0760	0.0914	0.324	0.360	0.983
L2×2×3/8	0.476	0.348	0.591	0.632	0.629	0.343	0.203	0.227	0.386	1.00	1.00
×5/16	0.414	0.298	0.598	0.609	0.537	0.290	0.173	0.200	0.386	1.00	1.00
×1/4	0.346	0.244	0.605	0.586	0.440	0.236	0.141	0.171	0.387	1.00	1.00
×3/16	0.271	0.188	0.612	0.561	0.338	0.181	0.109	0.137	0.389	1.00	1.00
×1/8	0.189	0.129	0.620	0.534	0.230	0.123	0.0751	0.0994	0.391	1.00	0.912

Table 1-7B
Compactness Criteria for Angles

t	Compression	Flexure		t	Compression	Flexure	
	nonslender up to	compact up to	noncompact up to		nonslender up to	compact up to	noncompact up to
	Width of angle leg, in.				Width of angle leg, in.		
1 1/8	8	8	—	7/16	5	6	8
1	↓	↓	—	3/8	4	5	8
7/8			—	5/16	4	4	8
3/4			—	1/4	3	3 1/2	6
5/8			—	3/16	2	2 1/2	4
9/16	7	↓	—	1/8	1 1/2	1 1/2	3
1/2	6	7	8				

Note: Compactness criteria given for $F_y = 36$ ksi. $C_y = 1.0$ for all angles.

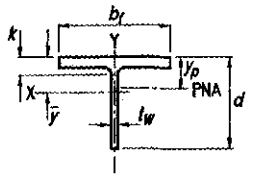

Table 1-8
WT-Shapes
Dimensions

Shape	Area, A	Depth, d		Stem				Flange				Distance		
				Thickness, t_w		$\frac{t_w}{2}$	Area	Width, b_f		Thickness, t_f		k		Work-able Gage
												k_{des}	k_{det}	
	in.^{2}	in.		in.		in.	in.^{2}	in.		in.		in.	in.	in.
WT22×167.5[c]	49.2	22.0	22	1.03	1	1/2	22.6	15.9	16	1.77	1 3/4	2.56	2 5/8	5 1/2
×145[c]	42.6	21.8	21 3/4	0.865	7/8	7/16	18.9	15.8	15 7/8	1.58	1 9/16	2.36	2 7/16	
×131[c]	38.5	21.7	21 5/8	0.785	13/16	7/16	17.0	15.8	15 3/4	1.42	1 7/16	2.20	2 1/4	
×115[c,v]	33.9	21.5	21 1/2	0.710	11/16	3/8	15.2	15.8	15 3/4	1.22	1 1/4	2.01	2 1/16	
WT20×296.5[h]	87.2	21.5	21 1/2	1.79	1 13/16	15/16	38.5	16.7	16 3/4	3.23	3 1/4	4.41	4 1/2	7 1/2
×251.5[h]	74.0	21.0	21	1.54	1 9/16	13/16	32.3	16.4	16 3/8	2.76	2 3/4	3.94	4	
×215.5[h]	63.3	20.6	20 5/8	1.34	1 5/16	11/16	27.6	16.2	16 1/4	2.36	2 3/8	3.54	3 5/8	
×198.5[h]	58.3	20.5	20 1/2	1.22	1 1/4	5/8	25.0	16.1	16 1/8	2.20	2 3/16	3.38	3 1/2	
×186[h]	54.7	20.3	20 3/8	1.16	1 3/16	5/8	23.6	16.1	16 1/8	2.05	2 1/16	3.23	3 5/16	
×181[c,h]	53.2	20.3	20 1/4	1.12	1 1/8	9/16	22.7	16.0	16	2.01	2	3.19	3 1/4	
×162[c]	47.7	20.1	20 1/8	1.00	1	1/2	20.1	15.9	15 7/8	1.81	1 13/16	2.99	3 1/16	
×148.5[c]	43.6	19.9	19 7/8	0.930	15/16	1/2	18.5	15.8	15 7/8	1.65	1 5/8	2.83	2 15/16	
×138.5[c]	40.7	19.8	19 7/8	0.830	13/16	7/16	16.5	15.8	15 7/8	1.58	1 9/16	2.76	2 7/8	
×124.5[c]	36.7	19.7	19 3/4	0.750	3/4	3/8	14.8	15.8	15 3/4	1.42	1 7/16	2.60	2 11/16	
×107.5[c,v]	31.8	19.5	19 1/2	0.650	5/8	5/16	12.7	15.8	15 3/4	1.22	1 1/4	2.40	2 1/2	
×99.5[c,v]	29.2	19.3	19 3/8	0.650	5/8	5/16	12.6	15.8	15 3/4	1.07	1 1/16	2.25	2 5/16	
WT20×196[h]	57.8	20.8	20 3/4	1.42	1 7/16	3/4	29.4	12.4	12 3/8	2.52	2 1/2	3.70	3 13/16	7 1/2
×165.5[h]	48.8	20.4	20 3/8	1.22	1 1/4	5/8	24.9	12.2	12 1/8	2.13	2 1/8	3.31	3 3/8	
×163.5[h]	47.9	20.4	20 3/8	1.18	1 3/16	5/8	24.1	12.1	12 1/8	2.13	2 1/8	3.31	3 3/8	
×147[c]	43.1	20.2	20 1/4	1.06	1 1/16	9/16	21.4	12.0	12	1.93	1 15/16	3.11	3 3/16	
×139[c]	41.0	20.1	20 1/8	1.03	1	1/2	20.6	12.0	12	1.81	1 13/16	2.99	3 1/16	
×132[c]	38.7	20.0	20	0.960	15/16	1/2	19.2	11.9	11 7/8	1.73	1 3/4	2.91	3	
×117.5[c]	34.6	19.8	19 7/8	0.830	13/16	7/16	16.5	11.9	11 7/8	1.58	1 9/16	2.76	2 7/8	
×105.5[c]	31.1	19.7	19 5/8	0.750	3/4	3/8	14.8	11.8	11 3/4	1.42	1 7/16	2.60	2 11/16	
×91.5[c,v]	26.7	19.5	19 1/2	0.650	5/8	5/16	12.7	11.8	11 3/4	1.20	1 3/16	2.38	2 1/2	
×83.5[c,v]	24.5	19.3	19 1/4	0.650	5/8	5/16	12.5	11.8	11 3/4	1.03	1	2.21	2 5/16	
×74.5[c,v]	21.9	19.1	19 1/8	0.630	5/8	5/16	12.0	11.8	11 3/4	0.830	13/16	2.01	2 1/8	

[c] Shape is slender for compression with F_y = 50 ksi.
[h] Flange thickness greater than 2 in. Special requirements may apply per AISC *Specification* Section A3.1c.
[v] Shear strength controlled by buckling effects (C_v < 1.0) with F_y = 50 ksi.

Table 1-8 (continued)
WT-Shapes
Properties

WT22-WT20

Nominal Wt.	Compact Section Criteria		Axis X-X						Axis Y-Y				Q_s	Torsional Properties	
	$\frac{b_f}{2t_f}$	$\frac{d}{t_w}$	I	S	r	$\bar{y}$	Z	y_p	I	S	r	Z	$F_y = 50$ ksi	J	C_w
lb/ft			in.^{4}	in.^{3}	in.	in.	in.^{3}	in.	in.^{4}	in.^{3}	in.	in.^{3}		in.^{4}	in.^{6}
167.5	4.50	21.4	2170	131	6.63	5.53	234	1.54	600	75.2	3.49	118	0.824	37.2	438
145	5.02	25.2	1830	111	6.54	5.26	196	1.35	521	65.9	3.49	102	0.630	25.4	275
131	5.57	27.6	1640	99.4	6.53	5.19	176	1.22	462	58.6	3.47	90.9	0.525	18.6	200
115	6.45	30.3	1440	88.6	6.53	5.17	157	1.07	398	50.5	3.43	78.3	0.436	12.4	139
296.5	2.58	12.0	3310	209	6.16	5.66	379	2.61	1260	151	3.80	240	1.00	221	2340
251.5	2.98	13.6	2730	174	6.07	5.38	314	2.25	1020	124	3.72	197	1.00	138	1400
215.5	3.44	15.4	2290	148	6.01	5.18	266	1.95	843	104	3.65	164	1.00	88.2	881
198.5	3.66	16.8	2070	134	5.96	5.03	240	1.81	771	95.7	3.63	150	1.00	70.6	677
186	3.93	17.5	1930	126	5.95	4.98	225	1.70	709	88.3	3.60	138	1.00	57.7	558
181	3.99	18.1	1870	122	5.92	4.91	217	1.66	691	86.3	3.60	135	0.991	54.2	511
162	4.40	20.1	1650	108	5.88	4.77	192	1.50	609	76.6	3.57	119	0.890	39.6	362
148.5	4.80	21.4	1500	98.9	5.87	4.71	176	1.38	546	69.0	3.54	107	0.824	30.5	279
138.5	5.03	23.9	1360	88.6	5.78	4.50	157	1.29	522	65.9	3.58	102	0.697	25.7	218
124.5	5.55	26.3	1210	79.4	5.75	4.41	140	1.16	463	58.8	3.55	90.8	0.579	19.0	158
107.5	6.45	30.0	1030	68.0	5.71	4.28	120	1.01	398	50.5	3.54	77.8	0.445	12.4	101
99.5	7.39	29.7	988	66.5	5.81	4.47	117	0.929	347	44.1	3.45	68.2	0.454	9.12	83.5
196	2.45	14.6	2270	153	6.27	5.94	275	2.33	401	64.9	2.64	106	1.00	85.4	796
165.5	2.86	16.7	1880	128	6.21	5.74	231	2.00	322	52.9	2.57	85.7	1.00	52.5	484
163.5	2.85	17.3	1840	125	6.19	5.66	224	1.98	320	52.7	2.58	85.0	1.00	51.4	449
147	3.11	19.1	1630	111	6.14	5.51	199	1.80	281	46.7	2.55	75.0	0.940	38.2	322
139	3.31	19.5	1550	106	6.14	5.51	191	1.71	261	43.5	2.52	69.9	0.920	32.4	282
132	3.45	20.8	1450	99.2	6.11	5.41	178	1.63	246	41.3	2.52	66.0	0.854	27.9	233
117.5	3.77	23.9	1260	85.7	6.04	5.17	153	1.45	222	37.3	2.54	59.0	0.697	20.6	156
105.5	4.17	26.3	1120	76.7	6.01	5.08	137	1.31	195	33.0	2.51	52.1	0.579	15.2	113
91.5	4.92	30.0	955	65.7	5.98	4.97	117	1.13	165	28.0	2.49	44.0	0.445	9.65	71.2
83.5	5.76	29.7	899	63.7	6.05	5.19	115	1.10	141	23.9	2.40	37.8	0.454	6.99	62.9
74.5	7.11	30.3	815	59.7	6.10	5.46	108	1.72	114	19.4	2.29	30.9	0.436	4.66	51.9

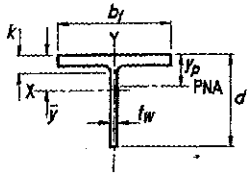

Table 1-8 (continued)
WT-Shapes
Dimensions

Shape	Area, A	Depth, d		Stem				Flange				Distance		
				Thickness, t_w		$\frac{t_w}{2}$	Area	Width, b_f		Thickness, t_f		k		Work-able Gage
												k_{des}	k_{det}	
	in.^{2}	in.		in.		in.	in.^{2}	in.		in.		in.	in.	in.
WT18×326[h]	96.2	20.5	20 1/2	1.97	2	1	40.4	17.6	17 5/8	3.54	3 9/16	4.49	4 13/16	7 1/2
×264.5[h]	77.8	19.9	19 7/8	1.61	1 5/8	13/16	32.0	17.2	17 1/4	2.91	2 15/16	3.86	4 3/16	
×243.5[h]	71.7	19.7	19 5/8	1.50	1 1/2	3/4	29.5	17.1	17 1/8	2.68	2 11/16	3.63	4	
×220.5[h]	64.9	19.4	19 3/8	1.36	1 3/8	11/16	26.4	17.0	17	2.44	2 7/16	3.39	3 3/4	
×197.5[h]	58.1	19.2	19 1/4	1.22	1 1/4	5/8	23.4	16.8	16 7/8	2.20	2 3/16	3.15	3 7/16	
×180.5[h]	53.0	19.0	19	1.12	1 1/8	9/16	21.3	16.7	16 3/4	2.01	2	2.96	3 5/16	
×165[c]	48.4	18.8	18 7/8	1.02	1	1/2	19.2	16.6	16 5/8	1.85	1 7/8	2.80	3 1/8	
×151[c]	44.5	18.7	18 5/8	0.945	15/16	1/2	17.6	16.7	16 5/8	1.68	1 11/16	2.63	3	
×141[c]	41.5	18.6	18 1/2	0.885	7/8	7/16	16.4	16.6	16 5/8	1.57	1 9/16	2.52	2 7/8	
×131[c]	38.5	18.4	18 3/8	0.840	13/16	7/16	15.5	16.6	16 1/2	1.44	1 7/16	2.39	2 3/4	
×123.5[c]	36.3	18.3	18 3/8	0.800	13/16	7/16	14.7	16.5	16 1/2	1.35	1 3/8	2.30	2 5/8	
×115.5[c]	34.1	18.2	18 1/4	0.760	3/4	3/8	13.9	16.5	16 1/2	1.26	1 1/4	2.21	2 9/16	
WT18×128[c]	37.6	18.7	18 3/4	0.960	15/16	1/2	18.0	12.2	12 1/4	1.73	1 3/4	2.48	2 5/8	5 1/2
×116[c]	34.0	18.6	18 1/2	0.870	7/8	7/16	16.1	12.1	12 1/8	1.57	1 9/16	2.32	2 7/16	
×105[c]	30.9	18.3	18 3/8	0.830	13/16	7/16	15.2	12.2	12 1/8	1.36	1 3/8	2.11	2 5/16	
×97[c]	28.5	18.2	18 1/4	0.765	3/4	3/8	14.0	12.1	12 1/8	1.26	1 1/4	2.01	2 3/16	
×91[c]	26.8	18.2	18 1/8	0.725	3/4	3/8	13.2	12.1	12 1/8	1.18	1 3/16	1.93	2 1/8	
×85[c]	25.0	18.1	18 1/8	0.680	11/16	3/8	12.3	12.0	12	1.10	1 1/8	1.85	2	
×80[c]	23.5	18.0	18	0.650	5/8	5/16	11.7	12.0	12	1.02	1	1.77	1 15/16	
×75[c]	22.1	17.9	17 7/8	0.625	5/8	5/16	11.2	12.0	12	0.940	15/16	1.69	1 7/8	
×67.5[c,v]	19.9	17.8	17 3/4	0.600	5/8	5/16	10.7	12.0	12	0.790	13/16	1.54	1 11/16	
WT16.5×193.5[h]	57.0	18.0	18	1.26	1 1/4	5/8	22.6	16.2	16 1/4	2.28	2 1/4	3.07	3 3/16	5 1/2
×177[h]	52.1	17.8	17 3/4	1.16	1 3/16	5/8	20.6	16.1	16 1/8	2.09	2 1/16	2.88	2 15/16	
×159	46.8	17.6	17 5/8	1.04	1 1/16	9/16	18.3	16.0	16	1.89	1 7/8	2.68	2 3/4	
×145.5[c]	42.8	17.4	17 3/8	0.960	15/16	1/2	16.7	15.9	15 7/8	1.73	1 3/4	2.52	2 5/8	
×131.5[c]	38.7	17.3	17 1/4	0.870	7/8	7/16	15.0	15.8	15 3/4	1.57	1 9/16	2.36	2 7/16	
×120.5[c]	35.6	17.1	17 1/8	0.830	13/16	7/16	14.2	15.9	15 7/8	1.40	1 3/8	2.19	2 1/4	
×110.5[c]	32.6	17.0	17	0.775	3/4	3/8	13.1	15.8	15 3/4	1.28	1 1/4	2.06	2 1/8	
×100.5[c]	29.7	16.8	16 7/8	0.715	11/16	3/8	12.0	15.7	15 3/4	1.15	1 1/8	1.94	2	

[c] Shape is slender for compression with F_y = 50 ksi.
[h] Flange thickness greater than 2 in. Special requirements may apply per AISC *Specification* Section A3.1c.
[v] Shear strength controlled by buckling effects (C_v < 1.0) with F_y = 50 ksi.

Table 1-8 (continued)
WT-Shapes
Properties

WT18-WT16.5

Nominal Wt.	Compact Section Criteria		Axis X-X						Axis Y-Y				Q_s	Torsional Properties	
	$\frac{b_f}{2t_f}$	$\frac{d}{t_w}$	I	S	r	$\bar{y}$	Z	y_p	I	S	r	Z	$F_y = 50$ ksi	J	C_w
lb/ft			in.^{4}	in.^{3}	in.	in.	in.^{3}	in.	in.^{4}	in.^{3}	in.	in.^{3}		in.^{4}	in.^{6}
326	2.48	10.4	3160	208	5.74	5.35	383	2.73	1610	184	4.10	290	1.00	295	3070
264.5	2.96	12.4	2440	164	5.60	4.96	298	2.26	1240	145	4.00	227	1.00	163	1600
243.5	3.19	13.1	2220	150	5.57	4.84	272	2.10	1120	131	3.96	206	1.00	128	1250
220.5	3.48	14.3	1980	134	5.52	4.69	242	1.91	997	117	3.92	184	1.00	96.6	914
197.5	3.83	15.7	1740	119	5.47	4.53	213	1.73	877	104	3.88	162	1.00	70.7	652
180.5	4.16	17.0	1570	107	5.43	4.42	192	1.59	786	94.0	3.85	146	1.00	54.1	491
165	4.49	18.4	1410	97.0	5.39	4.30	173	1.46	711	85.5	3.83	132	0.976	42.0	372
151	4.96	19.8	1280	88.8	5.37	4.22	158	1.33	648	77.8	3.82	120	0.905	32.1	285
141	5.29	21.0	1190	82.6	5.36	4.16	146	1.25	599	72.2	3.80	112	0.844	26.3	231
131	5.75	21.9	1110	77.5	5.36	4.14	137	1.16	545	65.8	3.76	102	0.799	20.8	185
123.5	6.11	22.9	1040	73.3	5.36	4.12	129	1.10	507	61.4	3.74	94.8	0.748	17.3	155
115.5	6.54	23.9	978	69.1	5.36	4.10	122	1.03	470	57.0	3.71	88.0	0.697	14.3	129
128	3.53	19.5	1210	87.4	5.66	4.92	156	1.54	264	43.2	2.65	68.5	0.920	26.4	205
116	3.86	21.4	1080	78.5	5.63	4.82	140	1.40	234	38.6	2.62	60.9	0.824	19.7	151
105	4.48	22.0	985	73.1	5.65	4.87	131	1.27	206	33.8	2.58	53.4	0.794	13.9	119
97	4.81	23.8	901	67.0	5.62	4.80	120	1.18	187	30.9	2.56	48.8	0.702	11.1	92.7
91	5.12	25.1	845	63.1	5.62	4.77	113	1.11	174	28.8	2.55	45.3	0.635	9.20	77.6
85	5.47	26.6	786	58.9	5.61	4.73	105	1.04	160	26.6	2.53	41.8	0.566	7.51	63.2
80	5.88	27.7	740	55.8	5.61	4.74	100	0.980	147	24.6	2.50	38.6	0.522	6.17	53.6
75	6.37	28.6	698	53.1	5.62	4.78	95.5	0.923	135	22.5	2.47	35.4	0.489	5.04	46.0
67.5	7.56	29.7	637	49.7	5.66	4.96	90.1	1.23	113	18.9	2.38	29.8	0.454	3.48	37.3
193.5	3.55	14.3	1460	107	5.07	4.27	193	1.76	810	100	3.77	156	1.00	73.9	615
177	3.85	15.3	1320	96.8	5.03	4.15	174	1.62	729	90.6	3.74	141	1.00	57.1	468
159	4.23	16.9	1160	85.8	4.99	4.02	154	1.46	645	80.7	3.71	125	1.00	42.1	335
145.5	4.60	18.1	1060	78.3	4.96	3.93	140	1.35	581	73.1	3.68	113	0.991	32.5	256
131.5	5.03	19.9	943	70.2	4.93	3.83	125	1.23	517	65.5	3.65	101	0.900	24.3	188
120.5	5.66	20.6	872	65.8	4.96	3.84	116	1.12	466	58.8	3.62	90.8	0.864	18.0	146
110.5	6.20	21.9	799	60.8	4.95	3.81	107	1.03	420	53.2	3.59	82.1	0.799	13.9	113
100.5	6.85	23.5	725	55.5	4.95	3.77	97.8	0.940	375	47.6	3.56	73.3	0.718	10.4	84.9

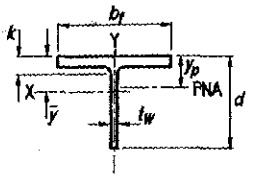

Table 1-8 (continued)
WT-Shapes
Dimensions

Shape	Area, A	Depth, d	Stem				Flange				Distance		
			Thickness, t_w		$\frac{t_w}{2}$	Area	Width, b_f		Thickness, t_f		k		Workable Gage
											k_{des}	k_{det}	
	in.^{2}	in.	in.		in.	in.^{2}	in.		in.		in.	in.	in.
WT16.5×84.5[c]	24.7	16.9	16 7/8	0.670	11/16	3/8	11.3	11.5	11 1/2	1.22	1 1/4	1.92	2 1/8	5 1/2
×76[c]	22.5	16.7	16 3/4	0.635	5/8	5/16	10.6	11.6	11 5/8	1.06	1 1/16	1.76	1 15/16	
×70.5[c]	20.7	16.7	16 5/8	0.605	5/8	5/16	10.1	11.5	11 1/2	0.960	15/16	1.66	1 13/16	
×65[c]	19.1	16.5	16 1/2	0.580	9/16	5/16	9.60	11.5	11 1/2	0.855	7/8	1.56	1 3/4	
×59[c,v]	17.4	16.4	16 3/8	0.550	9/16	5/16	9.04	11.5	11 1/2	0.740	3/4	1.44	1 5/8	
WT15×195.5[h]	57.6	16.6	16 5/8	1.36	1 3/8	11/16	22.6	15.6	15 5/8	2.44	2 7/16	3.23	3 3/8	5 1/2
×178.5[h]	52.5	16.4	16 3/8	1.24	1 1/4	5/8	20.3	15.5	15 1/2	2.24	2 1/4	3.03	3 1/8	
×163[h]	48.0	16.2	16 1/4	1.14	1 1/8	9/16	18.5	15.4	15 3/8	2.05	2 1/16	2.84	2 15/16	
×146	43.0	16.0	16	1.02	1	1/2	16.3	15.3	15 1/4	1.85	1 7/8	2.64	2 3/4	
×130.5	38.5	15.8	15 3/4	0.930	15/16	1/2	14.7	15.2	15 1/8	1.65	1 5/8	2.44	2 9/16	
×117.5[c]	34.7	15.7	15 5/8	0.830	13/16	7/16	13.0	15.1	15	1.50	1 1/2	2.29	2 3/8	
×105.5[c]	31.1	15.5	15 1/2	0.775	3/4	3/8	12.0	15.1	15 1/8	1.32	1 5/16	2.10	2 1/4	
×95.5[c]	28.0	15.3	15 3/8	0.710	11/16	3/8	10.9	15.0	15	1.19	1 3/16	1.97	2 1/16	
×86.5[c]	25.4	15.2	15 1/4	0.655	5/8	5/16	10.0	15.0	15	1.07	1 1/16	1.85	2	
WT15×74[c]	21.8	15.3	15 3/8	0.650	5/8	5/16	10.0	10.5	10 1/2	1.18	1 3/16	1.83	2 1/16	5 1/2
×66[c]	19.5	15.2	15 1/8	0.615	5/8	5/16	9.32	10.5	10 1/2	1.00	1	1.65	1 7/8	
×62[c]	18.2	15.1	15 1/8	0.585	9/16	5/16	8.82	10.5	10 1/2	0.930	15/16	1.58	1 13/16	
×58[c]	17.1	15.0	15	0.565	9/16	5/16	8.48	10.5	10 1/2	0.850	7/8	1.50	1 3/4	
×54[c]	15.9	14.9	14 7/8	0.545	9/16	5/16	8.13	10.5	10 1/2	0.760	3/4	1.41	1 11/16	
×49.5[c]	14.5	14.8	14 7/8	0.520	1/2	1/4	7.71	10.5	10 1/2	0.670	11/16	1.32	1 9/16	
×45[c,v]	13.2	14.8	14 3/4	0.470	1/2	1/4	6.94	10.4	10 3/8	0.610	5/8	1.26	1 1/2	
WT13.5×269.5[h]	79.3	16.3	16 1/4	1.97	2	1	32.0	15.3	15 1/4	3.54	3 9/16	4.33	4 7/16	5 1/2[g]
×184[h]	54.2	15.2	15 1/4	1.38	1 3/8	11/16	21.0	14.7	14 5/8	2.48	2 1/2	3.27	3 3/8	5 1/2
×168[h]	49.5	15.0	15	1.26	1 1/4	5/8	18.9	14.6	14 1/2	2.28	2 1/4	3.07	3 3/16	
×153.5[h]	45.2	14.8	14 3/4	1.16	1 3/16	5/8	17.2	14.4	14 1/2	2.09	2 1/16	2.88	3	
×140.5	41.5	14.6	14 5/8	1.06	1 1/16	9/16	15.5	14.4	14 3/8	1.93	1 15/16	2.72	2 13/16	
×129	38.1	14.5	14 1/2	0.980	1	1/2	14.2	14.3	14 1/4	1.77	1 3/4	2.56	2 11/16	
×117.5	34.7	14.3	14 3/8	0.910	15/16	1/2	13.0	14.2	14 1/4	1.61	1 5/8	2.40	2 1/2	
×108.5	32.0	14.2	14 1/4	0.830	13/16	7/16	11.8	14.1	14 1/8	1.50	1 1/2	2.29	2 3/8	
×97[c]	28.6	14.1	14	0.750	3/4	3/8	10.5	14.0	14	1.34	1 5/16	2.13	2 1/4	
×89[c]	26.3	13.9	13 7/8	0.725	3/4	3/8	10.1	14.1	14 1/8	1.19	1 3/16	1.98	2 1/16	
×80.5[c]	23.8	13.8	13 3/4	0.660	11/16	3/8	9.10	14.0	14	1.08	1 1/16	1.87	2	
×73[c]	21.6	13.7	13 3/4	0.605	5/8	5/16	8.28	14.0	14	0.975	1	1.76	1 7/8	

[c] Shape is slender for compression with $F_y = 50$ ksi.

[g] *The actual size, combination and orientation of fastener components should be compared with the geometry of the cross section to ensure compatibility.*

[h] Flange thickness greater than 2 in. Special requirements may apply per AISC *Specification* Section A3.1c.

[v] Shear strength controlled by buckling effects ($C_v < 1.0$) with $F_y = 50$ ksi.

Table 1-8 (continued)
WT-Shapes
Properties

WT16.5-WT13.5

Nominal Wt.	Compact Section Criteria		Axis X-X						Axis Y-Y				Q_s	Torsional Properties	
	$\frac{b_f}{2t_f}$	$\frac{d}{t_w}$	I	S	r	$\bar{y}$	Z	y_p	I	S	r	Z	$F_y = 50$ ksi	J	C_w
lb/ft			in.^{4}	in.^{3}	in.	in.	in.^{3}	in.	in.^{4}	in.^{3}	in.	in.^{3}		in.^{4}	in.^{6}
84.5	4.71	25.2	649	51.1	5.12	4.21	90.8	1.08	155	27.0	2.50	42.1	0.630	8.81	55.4
76	5.48	26.3	592	47.4	5.14	4.26	84.5	0.967	136	23.6	2.47	36.9	0.579	6.16	43.0
70.5	6.01	27.6	552	44.7	5.15	4.29	79.8	0.901	123	21.3	2.43	33.4	0.525	4.84	35.4
65	6.73	28.4	513	42.1	5.18	4.36	75.6	0.832	109	18.9	2.38	29.7	0.496	3.67	29.3
59	7.76	29.8	469	39.2	5.20	4.47	70.8	0.862	93.5	16.3	2.32	25.6	0.451	2.64	23.4
195.5	3.19	12.2	1220	96.9	4.61	4.00	177	1.85	774	99.2	3.67	155	1.00	86.3	636
178.5	3.45	13.2	1090	87.2	4.56	3.87	159	1.70	693	89.6	3.64	140	1.00	66.6	478
163	3.75	14.2	981	78.8	4.52	3.76	143	1.56	622	81.0	3.60	126	1.00	51.2	361
146	4.12	15.7	861	69.6	4.48	3.62	125	1.41	549	71.9	3.58	111	1.00	37.5	257
130.5	4.59	17.0	765	62.4	4.46	3.54	112	1.27	480	63.3	3.53	97.9	1.00	26.9	184
117.5	5.02	18.9	674	55.1	4.41	3.41	98.2	1.15	427	56.8	3.51	87.5	0.951	20.1	133
105.5	5.74	20.0	610	50.5	4.43	3.39	89.5	1.03	378	50.1	3.49	77.2	0.895	14.1	96.4
95.5	6.35	21.5	549	45.7	4.42	3.34	80.8	0.935	336	44.7	3.46	68.9	0.819	10.5	71.2
86.5	7.01	23.2	497	41.7	4.42	3.31	73.5	0.851	299	39.9	3.42	61.4	0.733	7.78	53.0
74	4.44	23.5	466	40.6	4.63	3.84	72.2	1.04	114	21.7	2.28	33.9	0.718	7.24	37.6
66	5.27	24.7	421	37.4	4.66	3.90	66.8	0.921	98.0	18.6	2.25	29.2	0.657	4.85	28.5
62	5.65	25.8	396	35.3	4.66	3.90	63.1	0.867	90.4	17.2	2.23	27.0	0.601	3.98	23.9
58	6.17	26.5	373	33.7	4.67	3.94	60.4	0.815	82.1	15.6	2.19	24.6	0.570	3.21	20.5
54	6.89	27.3	349	32.0	4.69	4.01	57.7	0.757	73.0	13.9	2.15	21.9	0.537	2.49	17.3
49.5	7.80	28.5	322	30.0	4.71	4.09	54.4	0.912	63.9	12.2	2.10	19.3	0.493	1.88	14.3
45	8.52	31.5	290	27.1	4.69	4.04	49.0	0.835	57.3	11.0	2.09	17.3	0.403	1.41	10.5
269.5	2.15	8.30	1530	128	4.39	4.34	242	2.60	1060	138	3.65	218	1.00	247	1740
184	2.96	11.0	939	81.7	4.16	3.71	151	1.85	655	89.3	3.48	140	1.00	84.5	532
168	3.19	11.9	839	73.4	4.12	3.58	135	1.70	587	80.8	3.45	126	1.00	65.4	401
153.5	3.46	12.8	753	66.4	4.08	3.47	121	1.56	527	72.9	3.41	113	1.00	50.5	304
140.5	3.72	13.8	677	59.9	4.04	3.35	109	1.44	477	66.4	3.39	103	1.00	39.6	232
129	4.03	14.8	613	54.7	4.02	3.27	98.9	1.33	430	60.2	3.36	93.3	1.00	30.7	178
117.5	4.41	15.7	556	50.0	4.00	3.20	89.9	1.22	384	54.2	3.33	83.8	1.00	23.4	135
108.5	4.71	17.1	502	45.2	3.96	3.10	81.1	1.13	352	49.9	3.32	77.0	1.00	18.8	105
97	5.24	18.8	444	40.3	3.94	3.02	71.8	1.02	309	44.1	3.29	67.8	0.956	13.5	74.3
89	5.92	19.2	414	38.2	3.97	3.04	67.7	0.932	278	39.4	3.25	60.8	0.935	10.0	57.7
80.5	6.49	20.9	372	34.4	3.95	2.98	60.8	0.849	248	35.4	3.23	54.5	0.849	7.53	42.7
73	7.16	22.6	336	31.2	3.95	2.94	55.0	0.772	222	31.7	3.20	48.8	0.763	5.62	31.7

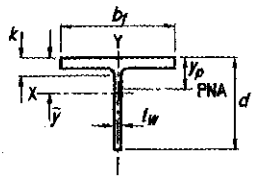

Table 1-8 (continued)
WT-Shapes
Dimensions

Shape	Area, A	Depth, d		Stem				Flange				Distance		
				Thickness, t_w		$\frac{t_w}{2}$	Area	Width, b_f		Thickness, t_f		k		Workable Gage
												k_{des}	k_{det}	
	in.^{2}	in.		in.		in.	in.^{2}	in.		in.		in.	in.	in.
WT13.5×64.5[c]	18.9	13.8	13 7/8	0.610	5/8	5/16	8.43	10.0	10	1.10	1 1/8	1.70	2	5 1/2
×57[c]	16.8	13.6	13 5/8	0.570	9/16	5/16	7.78	10.1	10 1/8	0.930	15/16	1.53	1 13/16	
×51[c]	15.0	13.5	13 1/2	0.515	1/2	1/4	6.98	10.0	10	0.830	13/16	1.43	1 3/4	
×47[c]	13.8	13.5	13 1/2	0.490	1/2	1/4	6.60	10.0	10	0.745	3/4	1.34	1 5/8	
×42[c]	12.4	13.4	13 3/8	0.460	7/16	1/4	6.14	10.0	10	0.640	5/8	1.24	1 9/16	
WT12×185[h]	54.5	14.0	14	1.52	1 1/2	3/4	21.3	13.7	13 5/8	2.72	2 3/4	3.22	3 5/8	5 1/2
×167.5[h]	49.1	13.8	13 3/4	1.38	1 3/8	11/16	19.0	13.5	13 1/2	2.48	2 1/2	2.98	3 3/8	
×153[h]	44.9	13.6	13 5/8	1.26	1 1/4	5/8	17.1	13.4	13 3/8	2.28	2 1/4	2.78	3 3/16	
×139.5[h]	41.0	13.4	13 3/8	1.16	1 3/16	5/8	15.5	13.3	13 1/4	2.09	2 1/16	2.59	3	
×125	36.8	13.2	13 1/8	1.04	1 1/16	9/16	13.7	13.2	13 1/8	1.89	1 7/8	2.39	2 13/16	
×114.5	33.6	13.0	13	0.960	15/16	1/2	12.5	13.1	13 1/8	1.73	1 3/4	2.23	2 5/8	
×103.5	30.3	12.9	12 7/8	0.870	7/8	7/16	11.2	13.0	13	1.57	1 9/16	2.07	2 1/2	
×96	28.2	12.7	12 3/4	0.810	13/16	7/16	10.3	13.0	13	1.46	1 7/16	1.96	2 3/8	
×88	25.8	12.6	12 5/8	0.750	3/4	3/8	9.47	12.9	12 7/8	1.34	1 5/16	1.84	2 1/4	
×81	23.9	12.5	12 1/2	0.705	11/16	3/8	8.81	13.0	13	1.22	1 1/4	1.72	2 1/8	
×73[c]	21.5	12.4	12 3/8	0.650	5/8	5/16	8.04	12.9	12 7/8	1.09	1 1/16	1.59	2	
×65.5[c]	19.3	12.2	12 1/4	0.605	5/8	5/16	7.41	12.9	12 7/8	0.960	15/16	1.46	1 7/8	
×58.5[c]	17.2	12.1	12 1/8	0.550	9/16	5/16	6.67	12.8	12 3/4	0.850	7/8	1.35	1 3/4	
×52[c]	15.3	12.0	12	0.500	1/2	1/4	6.02	12.8	12 3/4	0.750	3/4	1.25	1 5/8	
WT12×51.5[c]	15.1	12.3	12 1/4	0.550	9/16	5/16	6.75	9.00	9	0.980	1	1.48	1 7/8	5 1/2
×47[c]	13.8	12.2	12 1/8	0.515	1/2	1/4	6.26	9.07	9 1/8	0.875	7/8	1.38	1 3/4	
×42[c]	12.4	12.1	12	0.470	1/2	1/4	5.66	9.02	9	0.770	3/4	1.27	1 11/16	
×38[c]	11.2	12.0	12	0.440	7/16	1/4	5.26	8.99	9	0.680	11/16	1.18	1 9/16	5 1/2[g]
×34[c]	10.0	11.9	11 7/8	0.415	7/16	1/4	4.92	8.97	9	0.585	9/16	1.09	1 1/2	5 1/2[g]
WT12×31[c]	9.11	11.9	11 7/8	0.430	7/16	1/4	5.10	7.04	7	0.590	9/16	1.09	1 1/2	3 1/2
×27.5[c,v]	8.10	11.8	11 3/4	0.395	3/8	3/16	4.66	7.01	7	0.505	1/2	1.01	1 7/16	3 1/2

[c] Shape is slender for compression with $F_y = 50$ ksi.
[g] The actual size, combination and orientation of fastener components should be compared with the geometry of the cross section to ensure compatibility.
[h] Flange thickness greater than 2 in. Special requirements may apply per AISC *Specification* Section A3.1c.
[v] Shear strength controlled by buckling effects ($C_v < 1.0$) with $F_y = 50$ ksi.

Table 1-8 (continued)
WT-Shapes
Properties

WT13.5-WT12

Nominal Wt.	Compact Section Criteria		Axis X-X						Axis Y-Y				Q_s	Torsional Properties	
	$\frac{b_f}{2t_f}$	$\frac{d}{t_w}$	I	S	r	$\bar{y}$	Z	y_p	I	S	r	Z	$F_y = 50$ ksi	J	C_w
lb/ft			in.^{4}	in.^{3}	in.	in.	in.^{3}	in.	in.^{4}	in.^{3}	in.	in.^{3}		in.^{4}	in.^{6}
64.5	4.55	22.6	323	31.0	4.13	3.39	55.1	0.945	92.2	18.4	2.21	28.8	0.763	5.55	24.0
57	5.41	23.9	289	28.3	4.15	3.42	50.4	0.832	79.3	15.8	2.18	24.6	0.697	3.65	17.5
51	6.03	26.2	258	25.3	4.14	3.37	45.0	0.750	69.6	13.9	2.15	21.7	0.583	2.63	12.6
47	6.70	27.6	239	23.8	4.16	3.41	42.4	0.692	62.0	12.4	2.12	19.4	0.525	2.01	10.2
42	7.78	29.1	216	21.9	4.18	3.48	39.2	0.621	52.8	10.6	2.07	16.6	0.473	1.40	7.79
185	2.51	9.20	779	74.7	3.78	3.57	140	1.99	581	85.1	3.27	133	1.00	100	553
167.5	2.73	10.0	686	66.3	3.73	3.42	123	1.82	513	75.9	3.23	119	1.00	75.6	405
153	2.94	10.8	611	59.4	3.69	3.29	110	1.67	460	68.6	3.20	107	1.00	58.4	305
139.5	3.18	11.6	546	53.6	3.65	3.18	98.8	1.54	412	61.9	3.17	96.3	1.00	45.1	230
125	3.49	12.7	478	47.2	3.61	3.05	86.5	1.39	362	54.9	3.14	85.2	1.00	33.2	165
114.5	3.79	13.5	431	42.9	3.58	2.96	78.1	1.28	326	49.7	3.11	77.0	1.00	25.5	125
103.5	4.14	14.8	382	38.3	3.55	2.87	69.3	1.17	289	44.4	3.08	68.6	1.00	19.1	91.3
96	4.43	15.7	350	35.2	3.53	2.80	63.5	1.09	265	40.9	3.07	63.1	1.00	15.3	72.5
88	4.81	16.8	319	32.2	3.51	2.74	57.8	1.00	240	37.2	3.04	57.3	1.00	11.9	55.8
81	5.31	17.7	293	29.9	3.50	2.70	53.3	0.921	221	34.2	3.05	52.6	1.00	9.22	43.8
73	5.92	19.1	264	27.2	3.50	2.66	48.2	0.833	195	30.3	3.01	46.6	0.940	6.70	31.9
65.5	6.70	20.2	238	24.8	3.52	2.65	43.9	0.750	170	26.5	2.97	40.7	0.885	4.74	23.1
58.5	7.53	22.0	212	22.3	3.51	2.62	39.2	0.672	149	23.2	2.94	35.7	0.794	3.35	16.4
52	8.50	24.0	189	20.0	3.51	2.59	35.1	0.600	130	20.3	2.91	31.2	0.692	2.35	11.6
51.5	4.59	22.4	204	22.0	3.67	3.01	39.2	0.841	59.7	13.3	1.99	20.7	0.773	3.53	12.3
47	5.18	23.7	186	20.3	3.67	2.99	36.1	0.764	54.5	12.0	1.98	18.7	0.707	2.62	9.57
42	5.86	25.7	166	18.3	3.67	2.97	32.5	0.685	47.2	10.5	1.95	16.3	0.606	1.84	6.90
38	6.61	27.3	151	16.9	3.68	3.00	30.1	0.622	41.3	9.18	1.92	14.3	0.537	1.34	5.30
34	7.66	28.7	137	15.6	3.70	3.06	27.9	0.560	35.2	7.85	1.87	12.3	0.486	0.932	4.08
31	5.97	27.7	131	15.6	3.79	3.46	28.4	1.28	17.2	4.90	1.38	7.85	0.522	0.850	3.92
27.5	6.94	29.9	117	14.1	3.80	3.50	25.6	1.53	14.5	4.15	1.34	6.65	0.448	0.588	2.93

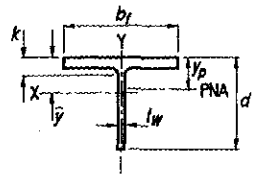

Table 1-8 (continued)
WT-Shapes
Dimensions

Shape	Area, A	Depth, d		Stem				Flange				Distance		
				Thickness, t_w		$\frac{t_w}{2}$	Area	Width, b_f		Thickness, t_f		k		Workable Gage
												k_{des}	k_{det}	
	in.^{2}	in.		in.		in.	in.^{2}	in.		in.		in.	in.	in.
WT10.5×100.5	29.6	11.5	11 1/2	0.910	15/16	1/2	10.5	12.6	12 5/8	1.63	1 5/8	2.13	2 1/2	5 1/2
×91	26.8	11.4	11 3/8	0.830	13/16	7/16	9.43	12.5	12 1/2	1.48	1 1/2	1.98	2 3/8	
×83	24.4	11.2	11 1/4	0.750	3/4	3/8	8.43	12.4	12 3/8	1.36	1 3/8	1.86	2 1/4	
×73.5	21.6	11.0	11	0.720	3/4	3/8	7.94	12.5	12 1/2	1.15	1 1/8	1.65	2	
×66	19.4	10.9	10 7/8	0.650	5/8	5/16	7.09	12.4	12 1/2	1.04	1 1/16	1.54	1 15/16	
×61	17.9	10.8	10 7/8	0.600	5/8	5/16	6.50	12.4	12 3/8	0.960	15/16	1.46	1 13/16	
×55.5[c]	16.3	10.8	10 3/4	0.550	9/16	5/16	5.92	12.3	12 3/8	0.875	7/8	1.38	1 3/4	
×50.5[c]	14.9	10.7	10 5/8	0.500	1/2	1/4	5.34	12.3	12 1/4	0.800	13/16	1.30	1 11/16	
WT10.5×46.5[c]	13.7	10.8	10 3/4	0.580	9/16	5/16	6.27	8.42	8 3/8	0.930	15/16	1.43	1 5/8	5 1/2
×41.5[c]	12.2	10.7	10 3/4	0.515	1/2	1/4	5.52	8.36	8 3/8	0.835	13/16	1.34	1 1/2	
×36.5[c]	10.7	10.6	10 5/8	0.455	7/16	1/4	4.83	8.30	8 1/4	0.740	3/4	1.24	1 7/16	
×34[c]	10.0	10.6	10 5/8	0.430	7/16	1/4	4.54	8.27	8 1/4	0.685	11/16	1.19	1 3/8	
×31[c]	9.13	10.5	10 1/2	0.400	3/8	3/16	4.20	8.24	8 1/4	0.615	5/8	1.12	1 5/16	
×27.5[c]	8.10	10.4	10 3/8	0.375	3/8	3/16	3.90	8.22	8 1/4	0.522	1/2	1.02	1 3/16	
×24[c,f,v]	7.07	10.3	10 1/4	0.350	3/8	3/16	3.61	8.14	8 1/8	0.430	7/16	0.930	1 1/8	
WT10.5×28.5[c]	8.37	10.5	10 1/2	0.405	3/8	3/16	4.26	6.56	6 1/2	0.650	5/8	1.15	1 5/16	3 1/2
×25[c]	7.36	10.4	10 3/8	0.380	3/8	3/16	3.96	6.53	6 1/2	0.535	9/16	1.04	1 1/4	3 1/2[g]
×22[c,v]	6.49	10.3	10 3/8	0.350	3/8	3/16	3.62	6.50	6 1/2	0.450	7/16	0.950	1 1/8	3 1/2[g]
WT9×155.5[h]	45.8	11.2	11 1/8	1.52	1 1/2	3/4	17.0	12.0	12	2.74	2 3/4	3.24	3 7/16	5 1/2
×141.5[h]	41.7	10.9	10 7/8	1.40	1 3/8	11/16	15.3	11.9	11 7/8	2.50	2 1/2	3.00	3 3/16	
×129[h]	38.0	10.7	10 3/4	1.28	1 1/4	5/8	13.7	11.8	11 3/4	2.30	2 5/16	2.70	3	
×117[h]	34.3	10.5	10 1/2	1.16	1 3/16	5/8	12.2	11.7	11 5/8	2.11	2 1/8	2.51	2 3/4	
×105.5	31.2	10.3	10 3/8	1.06	1 1/16	9/16	11.0	11.6	11 1/2	1.91	1 15/16	2.31	2 9/16	
×96	28.1	10.2	10 1/8	0.960	15/16	1/2	9.77	11.5	11 1/2	1.75	1 3/4	2.15	2 7/16	
×87.5	25.7	10.0	10	0.890	7/8	7/16	8.92	11.4	11 3/8	1.59	1 9/16	1.99	2 7/16	
×79	23.2	9.86	9 7/8	0.810	13/16	7/16	7.99	11.3	11 1/4	1.44	1 7/16	1.84	2 3/8	
×71.5	21.0	9.75	9 3/4	0.730	3/4	3/8	7.11	11.2	11 1/4	1.32	1 5/16	1.72	2 3/16	
×65	19.2	9.63	9 5/8	0.670	11/16	3/8	6.45	11.2	11 1/8	1.20	1 3/16	1.60	2 1/16	
×59.5	17.6	9.49	9 1/2	0.655	5/8	5/16	6.21	11.3	11 1/4	1.06	1 1/16	1.46	1 15/16	
×53	15.6	9.37	9 3/8	0.590	9/16	5/16	5.53	11.2	11 1/4	0.940	15/16	1.34	1 13/16	
×48.5	14.2	9.30	9 1/4	0.535	9/16	5/16	4.97	11.1	11 1/8	0.870	7/8	1.27	1 3/4	
×43[c]	12.7	9.20	9 1/4	0.480	1/2	1/4	4.41	11.1	11 1/8	0.770	3/4	1.17	1 5/8	
×38[c]	11.1	9.11	9 1/8	0.425	7/16	1/4	3.87	11.0	11	0.680	11/16	1.08	1 9/16	

[c] Shape is slender for compression with $F_y = 50$ ksi.
[f] Shape exceeds compact limit for flexure with $F_y = 50$ ksi.
[g] The actual size, combination and orientation of fastener components should be compared with the geometry of the cross section to ensure compatibility.
[h] Flange thickness greater than 2 in. Special requirements may apply per AISC *Specification* Section A3.1c.
[v] Shear strength controlled by buckling effects ($C_v < 1.0$) with $F_y = 50$ ksi.

Table 1-8 (continued)
WT-Shapes
Properties

WT10.5-WT9

Nominal Wt.	Compact Section Criteria		Axis X-X						Axis Y-Y				Q_s	Torsional Properties	
	$\frac{b_f}{2t_f}$	$\frac{d}{t_w}$	I	S	r	$\bar{y}$	Z	y_p	I	S	r	Z	$F_y = 50$ ksi	J	C_w
lb/ft			in.^{4}	in.^{3}	in.	in.	in.^{3}	in.	in.^{4}	in.^{3}	in.	in.^{3}		in.^{4}	in.^{6}
100.5	3.86	12.6	285	31.9	3.10	2.57	58.6	1.18	271	43.1	3.02	66.5	1.00	20.4	85.4
91	4.22	13.7	253	28.5	3.07	2.48	52.1	1.07	241	38.6	3.00	59.5	1.00	15.3	63.0
83	4.57	14.9	226	25.5	3.04	2.39	46.3	0.983	217	35.0	2.99	53.9	1.00	11.8	47.3
73.5	5.44	15.3	204	23.7	3.08	2.39	42.4	0.864	188	30.0	2.95	46.3	1.00	7.69	32.5
66	6.01	16.8	181	21.1	3.06	2.33	37.6	0.780	166	26.7	2.93	41.1	1.00	5.62	23.4
61	6.45	18.0	166	19.3	3.04	2.28	34.3	0.724	152	24.6	2.91	37.8	1.00	4.47	18.4
55.5	7.05	19.6	150	17.5	3.03	2.23	31.0	0.662	137	22.2	2.90	34.1	0.915	3.40	13.8
50.5	7.68	21.4	135	15.8	3.01	2.18	27.9	0.605	124	20.2	2.89	30.8	0.824	2.60	10.4
46.5	4.53	18.6	144	17.9	3.25	2.74	31.8	0.812	46.4	11.0	1.84	17.3	0.966	3.01	9.33
41.5	5.00	20.8	127	15.7	3.22	2.66	28.0	0.728	40.7	9.74	1.83	15.2	0.854	2.16	6.50
36.5	5.60	23.3	110	13.8	3.21	2.60	24.4	0.647	35.3	8.51	1.81	13.3	0.728	1.51	4.42
34	6.04	24.7	103	12.9	3.20	2.59	22.9	0.606	32.4	7.83	1.80	12.2	0.657	1.22	3.62
31	6.70	26.3	93.8	11.9	3.21	2.58	21.1	0.554	28.7	6.97	1.77	10.9	0.579	0.913	2.78
27.5	7.87	27.7	84.4	10.9	3.23	2.64	19.4	0.493	24.2	5.89	1.73	9.18	0.522	0.617	2.08
24	9.47	29.4	74.9	9.90	3.26	2.74	17.8	0.459	19.4	4.76	1.66	7.44	0.463	0.400	1.52
28.5	5.04	25.9	90.4	11.8	3.29	2.85	21.2	0.638	15.3	4.67	1.35	7.40	0.597	0.884	2.50
25	6.10	27.4	80.3	10.7	3.30	2.93	19.4	0.771	12.5	3.82	1.30	6.08	0.533	0.570	1.89
22	7.22	29.4	71.1	9.68	3.31	2.98	17.6	1.06	10.3	3.18	1.26	5.07	0.463	0.383	1.40
155.5	2.19	7.37	383	46.6	2.89	2.93	90.6	1.91	398	66.2	2.95	104	1.00	87.2	339
141.5	2.38	7.79	337	41.5	2.85	2.80	80.2	1.75	352	59.2	2.91	92.5	1.00	66.5	251
129	2.56	8.36	298	37.0	2.80	2.68	71.0	1.61	314	53.4	2.88	83.1	1.00	51.1	189
117	2.76	9.05	261	32.7	2.75	2.55	62.4	1.48	279	47.9	2.85	74.4	1.00	39.1	140
105.5	3.02	9.72	229	29.1	2.72	2.44	55.0	1.34	246	42.7	2.82	66.1	1.00	29.1	102
96	3.27	10.6	202	25.8	2.68	2.34	48.5	1.23	220	38.4	2.79	59.4	1.00	22.3	75.7
87.5	3.58	11.2	181	23.4	2.66	2.26	43.6	1.13	196	34.4	2.76	53.1	1.00	16.8	56.5
79	3.92	12.2	160	20.8	2.63	2.17	38.5	1.02	174	30.7	2.74	47.4	1.00	12.5	41.2
71.5	4.25	13.4	142	18.5	2.60	2.09	34.0	0.937	156	27.7	2.72	42.7	1.00	9.58	30.7
65	4.65	14.4	127	16.7	2.58	2.02	30.5	0.856	139	24.9	2.70	38.3	1.00	7.23	22.8
59.5	5.31	14.5	119	15.9	2.60	2.03	28.7	0.778	126	22.5	2.69	34.5	1.00	5.30	17.4
53	5.96	15.9	104	14.1	2.59	1.97	25.2	0.695	110	19.7	2.66	30.2	1.00	3.73	12.1
48.5	6.41	17.4	93.8	12.7	2.56	1.91	22.6	0.640	100	18.0	2.65	27.6	1.00	2.92	9.29
43	7.20	19.2	82.4	11.2	2.55	1.86	19.9	0.570	87.6	15.8	2.63	24.2	0.935	2.04	6.42
38	8.11	21.4	71.8	9.83	2.54	1.80	17.3	0.505	76.2	13.8	2.61	21.1	0.824	1.41	4.37

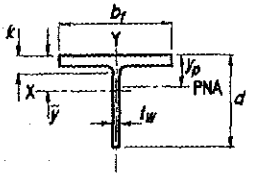

Table 1-8 (continued)
WT-Shapes
Dimensions

Shape	Area, A	Depth, d	Stem				Flange				Distance		
			Thickness, t_w		$\frac{t_w}{2}$	Area	Width, b_f		Thickness, t_f		k		Workable Gage
											k_{des}	k_{det}	
	in.^{2}	in.	in.		in.	in.^{2}	in.		in.		in.	in.	in.
WT9×35.5[c]	10.4	9.24	9 1/4	0.495	1/2	1/4	4.57	7.64	7 5/8	0.810	13/16	1.21	1 1/2	3 1/2[g]
×32.5[c]	9.55	9.18	9 1/8	0.450	7/16	1/4	4.13	7.59	7 5/8	0.750	3/4	1.15	1 7/16	
×30[c]	8.82	9.12	9 1/8	0.415	7/16	1/4	3.78	7.56	7 1/2	0.695	11/16	1.10	1 3/8	
×27.5[c]	8.10	9.06	9	0.390	3/8	3/16	3.53	7.53	7 1/2	0.630	5/8	1.03	1 5/16	
×25[c]	7.34	9.00	9	0.355	3/8	3/16	3.19	7.50	7 1/2	0.570	9/16	0.972	1 1/4	
WT9×23[c]	6.77	9.03	9	0.360	3/8	3/16	3.25	6.06	6	0.605	5/8	1.01	1 1/4	3 1/2[g]
×20[c]	5.88	8.95	9	0.315	5/16	3/16	2.82	6.02	6	0.525	1/2	0.927	1 3/16	
×17.5[c,v]	5.15	8.85	8 7/8	0.300	5/16	3/16	2.66	6.00	6	0.425	7/16	0.827	1 1/8	
WT8×50	14.7	8.49	8 1/2	0.585	9/16	5/16	4.96	10.4	10 3/8	0.985	1	1.39	1 7/8	5 1/2
×44.5	13.1	8.38	8 3/8	0.525	1/2	1/4	4.40	10.4	10 3/8	0.875	7/8	1.28	1 3/4	
×38.5[c]	11.3	8.26	8 1/4	0.455	7/16	1/4	3.76	10.3	10 1/4	0.760	3/4	1.16	1 5/8	
×33.5[c]	9.81	8.17	8 1/8	0.395	3/8	3/16	3.23	10.2	10 1/4	0.665	11/16	1.07	1 9/16	
WT8×28.5[c]	8.39	8.22	8 1/4	0.430	7/16	1/4	3.53	7.12	7 1/8	0.715	11/16	1.12	1 3/8	3 1/2[g]
×25[c]	7.37	8.13	8 1/8	0.380	3/8	3/16	3.09	7.07	7 1/8	0.630	5/8	1.03	1 5/16	
×22.5[c]	6.63	8.07	8 1/8	0.345	3/8	3/16	2.78	7.04	7	0.565	9/16	0.967	1 1/4	
×20[c]	5.89	8.01	8	0.305	5/16	3/16	2.44	7.00	7	0.505	1/2	0.907	1 3/16	3 1/2
×18[c]	5.29	7.93	7 7/8	0.295	5/16	3/16	2.34	6.99	7	0.430	7/16	0.832	1 1/8	3 1/2
WT8×15.5[c]	4.56	7.94	8	0.275	1/4	1/8	2.18	5.53	5 1/2	0.440	7/16	0.842	1 1/8	3 1/2
×13[c,v]	3.84	7.85	7 7/8	0.250	1/4	1/8	1.96	5.50	5 1/2	0.345	3/8	0.747	1 1/16	3 1/2

[c] Shape is slender for compression with $F_y = 50$ ksi.
[g] The actual size, combination and orientation of fastener components should be compared with the geometry of the cross section to ensure compatibility.
[v] Shear strength controlled by buckling effects ($C_v < 1.0$) with $F_y = 50$ ksi.

Table 1-8 (continued)
WT-Shapes
Properties

WT9-WT8

Nominal Wt.	Compact Section Criteria		Axis X-X						Axis Y-Y				Q_s	Torsional Properties	
	$\frac{b_f}{2t_f}$	$\frac{d}{t_w}$	I	S	r	$\bar{y}$	Z	y_p	I	S	r	Z	$F_y = 50$ ksi	J	C_w
lb/ft			in.^{4}	in.^{3}	in.	in.	in.^{3}	in.	in.^{4}	in.^{3}	in.	in.^{3}		in.^{4}	in.^{6}
35.5	4.71	18.7	78.2	11.2	2.74	2.26	20.0	0.683	30.1	7.89	1.70	12.3	0.961	1.74	3.96
32.5	5.06	20.4	70.7	10.1	2.72	2.20	18.0	0.629	27.4	7.22	1.69	11.2	0.875	1.36	3.01
30	5.44	22.0	64.7	9.29	2.71	2.16	16.5	0.583	25.0	6.63	1.68	10.3	0.794	1.08	2.35
27.5	5.98	23.2	59.5	8.63	2.71	2.16	15.3	0.538	22.5	5.97	1.67	9.26	0.733	0.830	1.84
25	6.57	25.4	53.5	7.79	2.70	2.12	13.8	0.489	20.0	5.35	1.65	8.28	0.620	0.619	1.36
23	5.01	25.1	52.1	7.77	2.77	2.33	13.9	0.558	11.3	3.71	1.29	5.84	0.635	0.609	1.20
20	5.73	28.4	44.8	6.73	2.76	2.29	12.0	0.489	9.55	3.17	1.27	4.97	0.496	0.404	0.788
17.5	7.06	29.5	40.1	6.21	2.79	2.39	11.2	0.450	7.67	2.56	1.22	4.02	0.460	0.252	0.598
50	5.29	14.5	76.8	11.4	2.28	1.76	20.7	0.706	93.1	17.9	2.51	27.4	1.00	3.85	10.4
44.5	5.92	16.0	67.2	10.1	2.27	1.70	18.1	0.631	81.3	15.7	2.49	24.0	1.00	2.72	7.19
38.5	6.77	18.2	56.9	8.59	2.24	1.63	15.3	0.549	69.2	13.4	2.47	20.5	0.986	1.78	4.61
33.5	7.70	20.7	48.6	7.36	2.22	1.56	13.0	0.481	59.5	11.6	2.46	17.7	0.859	1.19	3.01
28.5	4.98	19.1	48.7	7.77	2.41	1.94	13.8	0.589	21.6	6.06	1.60	9.42	0.940	1.10	1.99
25	5.61	21.4	42.3	6.78	2.40	1.89	12.0	0.521	18.6	5.26	1.59	8.15	0.824	0.760	1.34
22.5	6.23	23.4	37.8	6.10	2.39	1.86	10.8	0.471	16.4	4.67	1.57	7.22	0.723	0.555	0.974
20	6.93	26.3	33.1	5.35	2.37	1.81	9.43	0.421	14.4	4.12	1.56	6.36	0.579	0.396	0.673
18	8.12	26.9	30.6	5.05	2.41	1.88	8.93	0.378	12.2	3.50	1.52	5.42	0.553	0.272	0.516
15.5	6.28	28.9	27.5	4.64	2.45	2.02	8.27	0.413	6.20	2.24	1.17	3.51	0.479	0.230	0.366
13	7.97	31.4	23.5	4.09	2.47	2.09	7.36	0.372	4.79	1.74	1.12	2.73	0.406	0.130	0.243

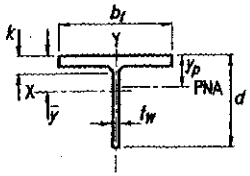

Table 1-8 (continued)
WT-Shapes
Dimensions

Shape	Area, A	Depth, d		Stem			Flange			Distance		
				Thickness, t_w	$\frac{t_w}{2}$	Area	Width, b_f	Thickness, t_f		k		Workable Gage
										k_{des}	k_{det}	
	in.^{2}	in.		in.	in.	in.^{2}	in.	in.		in.	in.	in.
WT7×365[h]	107	11.2	11 1/4	3.07	3 1/16	1 9/16	34.4	17.9	17 7/8	4.91	4 15/16	5.51	6 3/16	7 1/2[g]
×332.5[h]	97.8	10.8	10 7/8	2.83	2 13/16	1 7/16	30.6	17.7	17 5/8	4.52	4 1/2	5.12	5 13/16	7 1/2[g]
×302.5[h]	89.0	10.5	10 1/2	2.60	2 5/8	1 5/16	27.1	17.4	17 3/8	4.16	4 3/16	4.76	5 7/16	7 1/2
×275[h]	80.9	10.1	10 1/8	2.38	2 3/8	1 3/16	24.1	17.2	17 1/4	3.82	3 13/16	4.42	5 1/8	
×250[h]	73.5	9.80	9 3/4	2.19	2 3/16	1 1/8	21.5	17.0	17	3.50	3 1/2	4.10	4 13/16	
×227.5[h]	66.9	9.51	9 1/2	2.02	2	1	19.2	16.8	16 7/8	3.21	3 3/16	3.81	4 1/2	
×213[h]	62.7	9.34	9 3/8	1.88	1 7/8	15/16	17.5	16.7	16 3/4	3.04	3 1/16	3.63	4 5/16	
×199[h]	58.4	9.15	9 1/8	1.77	1 3/4	7/8	16.2	16.6	16 5/8	2.85	2 7/8	3.44	4 1/8	
×185[h]	54.4	8.96	9	1.66	1 11/16	13/16	14.8	16.5	16 1/2	2.66	2 11/16	3.26	3 15/16	
×171[h]	50.3	8.77	8 3/4	1.54	1 9/16	13/16	13.5	16.4	16 3/8	2.47	2 1/2	3.07	3 3/4	
×155.5[h]	45.7	8.56	8 1/2	1.41	1 7/16	3/4	12.1	16.2	16 1/4	2.26	2 1/4	2.86	3 9/16	
×141.5[h]	41.6	8.37	8 3/8	1.29	1 5/16	11/16	10.8	16.1	16 1/8	2.07	2 1/16	2.67	3 3/8	
×128.5	37.8	8.19	8 1/4	1.18	1 3/16	5/8	9.62	16.0	16	1.89	1 7/8	2.49	3 3/16	
×116.5	34.2	8.02	8	1.07	1 1/16	9/16	8.58	15.9	15 7/8	1.72	1 3/4	2.32	3	
×105.5	31.0	7.86	7 7/8	0.980	1	1/2	7.70	15.8	15 3/4	1.56	1 9/16	2.16	2 7/8	
×96.5	28.4	7.74	7 3/4	0.890	7/8	7/16	6.89	15.7	15 3/4	1.44	1 7/16	2.04	2 3/4	
×88	25.9	7.61	7 5/8	0.830	13/16	7/16	6.32	15.7	15 5/8	1.31	1 5/16	1.91	2 5/8	
×79.5	23.4	7.49	7 1/2	0.745	3/4	3/8	5.58	15.6	15 5/8	1.19	1 3/16	1.79	2 1/2	
×72.5	21.3	7.39	7 3/8	0.680	11/16	3/8	5.03	15.5	15 1/2	1.09	1 1/16	1.69	2 3/8	
WT7×66	19.4	7.33	7 3/8	0.645	5/8	5/16	4.73	14.7	14 3/4	1.03	1	1.63	2 5/16	5 1/2
×60	17.7	7.24	7 1/4	0.590	9/16	5/16	4.27	14.7	14 5/8	0.940	15/16	1.54	2 1/4	
×54.5	16.0	7.16	7 1/8	0.525	1/2	1/4	3.76	14.6	14 5/8	0.860	7/8	1.46	2 3/16	
×49.5[f]	14.6	7.08	7 1/8	0.485	1/2	1/4	3.43	14.6	14 5/8	0.780	3/4	1.38	2 1/16	
×45[f]	13.2	7.01	7	0.440	7/16	1/4	3.08	14.5	14 1/2	0.710	11/16	1.31	2	
WT7×41	12.0	7.16	7 1/8	0.510	1/2	1/4	3.65	10.1	10 1/8	0.855	7/8	1.45	1 11/16	5 1/2
×37	10.9	7.09	7 1/8	0.450	7/16	1/4	3.19	10.1	10 1/8	0.785	13/16	1.38	1 5/8	
×34	10.0	7.02	7	0.415	7/16	1/4	2.91	10.0	10	0.720	3/4	1.31	1 9/16	
×30.5[c]	8.96	6.95	7	0.375	3/8	3/16	2.60	10.0	10	0.645	5/8	1.24	1 1/2	
WT7×26.5[c]	7.80	6.96	7	0.370	3/8	3/16	2.58	8.06	8	0.660	11/16	1.25	1 1/2	5 1/2
×24[c]	7.07	6.90	6 7/8	0.340	5/16	3/16	2.34	8.03	8	0.595	5/8	1.19	1 7/16	
×21.5[c]	6.31	6.83	6 7/8	0.305	5/16	3/16	2.08	8.00	8	0.530	1/2	1.12	1 3/8	

[c] Shape is slender for compression with F_y = 50 ksi.
[f] Shape exceeds compact limit for flexure with F_y = 50 ksi.
[g] The actual size, combination and orientation of fastener components should be compared with the geometry of the cross section to ensure compatibility.
[h] Flange thickness greater than 2 in. Special requirements may apply per AISC *Specification* Section A3.1c.

Table 1-8 (continued)
WT-Shapes
Properties

Nominal Wt.	Compact Section Criteria		Axis X-X						Axis Y-Y				Q_s	Torsional Properties	
	$\frac{b_f}{2t_f}$	$\frac{d}{t_w}$	I	S	r	$\bar{y}$	Z	y_p	I	S	r	Z	$F_y = 50$ ksi	J	C_w
lb/ft			in.^{4}	in.^{3}	in.	in.	in.^{3}	in.	in.^{4}	in.^{3}	in.	in.^{3}		in.^{4}	in.^{6}
365	1.82	3.65	739	95.4	2.62	3.47	211	3.00	2360	264	4.69	408	1.00	714	5250
332.5	1.95	3.82	622	82.1	2.52	3.25	182	2.77	2080	236	4.62	365	1.00	555	3920
302.5	2.09	4.04	524	70.6	2.43	3.05	157	2.55	1840	211	4.55	326	1.00	430	2930
275	2.25	4.24	442	60.9	2.34	2.85	136	2.35	1630	189	4.49	292	1.00	331	2180
250	2.43	4.47	375	52.7	2.26	2.67	117	2.16	1440	169	4.43	261	1.00	254	1620
227.5	2.62	4.71	321	45.9	2.19	2.51	102	1.99	1280	152	4.38	234	1.00	196	1210
213	2.75	4.97	287	41.4	2.14	2.40	91.7	1.88	1180	141	4.34	217	1.00	164	991
199	2.92	5.17	257	37.6	2.10	2.30	82.9	1.76	1090	131	4.31	201	1.00	135	801
185	3.10	5.40	229	33.9	2.05	2.19	74.4	1.65	994	121	4.27	185	1.00	110	640
171	3.31	5.69	203	30.4	2.01	2.09	66.2	1.54	903	110	4.24	169	1.00	88.3	502
155.5	3.59	6.07	176	26.7	1.96	1.97	57.7	1.41	807	99.4	4.20	152	1.00	67.5	375
141.5	3.89	6.49	153	23.5	1.92	1.86	50.4	1.29	722	89.7	4.17	137	1.00	51.8	281
128.5	4.23	6.94	133	20.7	1.88	1.75	43.9	1.18	645	80.7	4.13	123	1.00	39.3	209
116.5	4.62	7.50	116	18.2	1.84	1.65	38.2	1.08	576	72.5	4.10	110	1.00	29.6	154
105.5	5.06	8.02	102	16.2	1.81	1.57	33.4	0.980	513	65.0	4.07	98.9	1.00	22.2	113
96.5	5.45	8.70	89.8	14.4	1.78	1.49	29.4	0.903	466	59.3	4.05	90.1	1.00	17.3	87.2
88	5.97	9.17	80.5	13.0	1.76	1.43	26.3	0.827	419	53.5	4.02	81.3	1.00	13.2	65.2
79.5	6.54	10.1	70.2	11.4	1.73	1.35	22.8	0.751	374	48.1	4.00	73.0	1.00	9.84	47.9
72.5	7.11	10.9	62.5	10.2	1.71	1.29	20.2	0.688	338	43.7	3.98	66.2	1.00	7.56	36.3
66	7.15	11.4	57.8	9.57	1.73	1.29	18.6	0.658	274	37.2	3.76	56.5	1.00	6.13	26.6
60	7.80	12.3	51.7	8.61	1.71	1.24	16.5	0.602	247	33.7	3.74	51.2	1.00	4.67	20.0
54.5	8.49	13.6	45.3	7.56	1.68	1.17	14.4	0.548	223	30.6	3.73	46.3	1.00	3.55	15.0
49.5	9.34	14.6	40.9	6.88	1.67	1.14	12.9	0.500	201	27.6	3.71	41.8	1.00	2.68	11.1
45	10.2	15.9	36.5	6.16	1.66	1.09	11.5	0.456	181	25.0	3.70	37.8	1.00	2.03	8.31
41	5.92	14.0	41.2	7.14	1.85	1.39	13.2	0.593	74.1	14.6	2.48	22.4	1.00	2.53	5.63
37	6.41	15.8	36.0	6.25	1.82	1.32	11.5	0.541	66.9	13.3	2.48	20.2	1.00	1.93	4.19
34	6.97	16.9	32.6	5.69	1.81	1.29	10.4	0.498	60.7	12.1	2.46	18.4	1.00	1.50	3.21
30.5	7.75	18.5	28.9	5.07	1.80	1.25	9.15	0.448	53.7	10.7	2.45	16.4	0.971	1.09	2.29
26.5	6.11	18.8	27.6	4.94	1.88	1.38	8.87	0.484	28.8	7.15	1.92	11.0	0.956	0.967	1.46
24	6.75	20.3	24.9	4.49	1.88	1.35	8.00	0.440	25.7	6.40	1.91	9.80	0.880	0.723	1.07
21.5	7.54	22.4	21.9	3.98	1.86	1.31	7.05	0.395	22.6	5.65	1.89	8.64	0.773	0.522	0.751

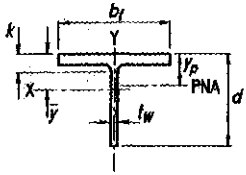

Table 1-8 (continued)
WT-Shapes
Dimensions

Shape	Area, A	Depth, d	Stem: Thickness, t_w	Stem: $\frac{t_w}{2}$	Stem: Area	Flange: Width, b_f	Flange: Thickness, t_f	Distance: k	Distance: k	Workable Gage
								k_{des}	k_{det}	
	in.^{2}	in.	in.	in.	in.^{2}	in.	in.	in.	in.	in.
WT7×19[c]	5.58	7.05	0.310	5/16	2.19	6.77	0.515	0.915	1 1/4	3 1/2[g]
×17[c]	5.00	6.99	0.285	5/16	1.99	6.75	0.455	0.855	1 3/16	3 1/2
×15[c]	4.42	6.92	0.270	1/4	1.87	6.73	0.385	0.785	1 1/8	3 1/2
WT7×13[c]	3.85	6.96	0.255	1/4	1.77	5.03	0.420	0.820	1 1/8	2 3/4[g]
×11[c,v]	3.25	6.87	0.230	1/4	1.58	5.00	0.335	0.735	1 1/16	2 3/4[g]
WT6×168[h]	49.5	8.41	1.78	1 3/4	14.9	13.4	2.96	3.55	3 7/8	5 1/2
×152.5[h]	44.7	8.16	1.63	1 5/8	13.3	13.2	2.71	3.30	3 5/8	
×139.5[h]	41.0	7.93	1.53	1 1/2	12.1	13.1	2.47	3.07	3 3/8	
×126[h]	37.1	7.71	1.40	1 3/8	10.7	13.0	2.25	2.85	3 1/8	
×115[h]	33.8	7.53	1.29	1 5/16	9.67	12.9	2.07	2.67	2 15/16	
×105	30.9	7.36	1.18	1 3/16	8.68	12.8	1.90	2.50	2 13/16	
×95	28.0	7.19	1.06	1 1/16	7.62	12.7	1.74	2.33	2 5/8	
×85	25.0	7.02	0.960	15/16	6.73	12.6	1.56	2.16	2 7/16	
×76	22.4	6.86	0.870	7/8	5.96	12.5	1.40	2.00	2 5/16	
×68	20.0	6.71	0.790	13/16	5.30	12.4	1.25	1.85	2 1/8	
×60	17.6	6.56	0.710	11/16	4.66	12.3	1.11	1.70	2	
×53	15.6	6.45	0.610	5/8	3.93	12.2	0.990	1.59	1 7/8	
×48	14.1	6.36	0.550	9/16	3.50	12.2	0.900	1.50	1 13/16	
×43.5	12.8	6.27	0.515	1/2	3.23	12.1	0.810	1.41	1 11/16	
×39.5	11.6	6.19	0.470	1/2	2.91	12.1	0.735	1.33	1 5/8	
×36	10.6	6.13	0.430	7/16	2.63	12.0	0.670	1.27	1 9/16	
×32.5[f]	9.54	6.06	0.390	3/8	2.36	12.0	0.605	1.20	1 1/2	
WT6×29	8.52	6.10	0.360	3/8	2.19	10.0	0.640	1.24	1 1/2	5 1/2
×26.5	7.78	6.03	0.345	3/8	2.08	10.0	0.575	1.18	1 3/8	5 1/2
WT6×25	7.30	6.10	0.370	3/8	2.26	8.08	0.640	1.14	1 1/2	5 1/2
×22.5	6.56	6.03	0.335	5/16	2.02	8.05	0.575	1.08	1 3/8	
×20[c]	5.84	5.97	0.295	5/16	1.76	8.01	0.515	1.02	1 3/8	
WT6×17.5[c]	5.17	6.25	0.300	5/16	1.88	6.56	0.520	0.820	1 3/16	3 1/2
×15[c]	4.40	6.17	0.260	1/4	1.60	6.52	0.440	0.740	1 1/8	
×13[c]	3.82	6.11	0.230	1/4	1.41	6.49	0.380	0.680	1 1/16	

[c] Shape is slender for compression with $F_y = 50$ ksi.
[f] Shape exceeds compact limit for flexure with $F_y = 50$ ksi.
[g] The actual size, combination and orientation of fastener components should be compared with the geometry of the cross section to ensure compatibility.
[h] Flange thickness greater than 2 in. Special requirements may apply per AISC *Specification* Section A3.1c.
[v] Shear strength controlled by buckling effects ($C_v < 1.0$) with $F_y = 50$ ksi.

Table 1-8 (continued)
WT-Shapes
Properties

WT7-WT6

Nominal Wt.	Compact Section Criteria		Axis X-X						Axis Y-Y				Q_s	Torsional Properties	
	$\frac{b_f}{2t_f}$	$\frac{d}{t_w}$	I	S	r	$\bar{y}$	Z	y_p	I	S	r	Z	$F_y = 50$ ksi	J	C_w
lb/ft			in.^{4}	in.^{3}	in.	in.	in.^{3}	in.	in.^{4}	in.^{3}	in.	in.^{3}		in.^{4}	in.^{6}
19	6.57	22.7	23.3	4.22	2.04	1.54	7.45	0.412	13.3	3.94	1.55	6.07	0.758	0.398	0.554
17	7.41	24.5	20.9	3.83	2.04	1.53	6.74	0.371	11.6	3.45	1.53	5.32	0.667	0.284	0.400
15	8.74	25.6	19.0	3.55	2.07	1.58	6.25	0.329	9.79	2.91	1.49	4.49	0.611	0.190	0.287
13	5.98	27.3	17.3	3.31	2.12	1.72	5.89	0.383	4.45	1.77	1.08	2.76	0.537	0.179	0.207
11	7.46	29.9	14.8	2.91	2.14	1.76	5.20	0.325	3.50	1.40	1.04	2.19	0.448	0.104	0.134
168	2.26	4.72	190	31.2	1.96	2.31	68.4	1.84	593	88.6	3.47	137	1.00	120	481
152.5	2.45	5.01	162	27.0	1.90	2.16	59.1	1.69	525	79.3	3.42	122	1.00	92.0	356
139.5	2.66	5.18	141	24.1	1.86	2.05	51.9	1.56	469	71.3	3.38	110	1.00	70.9	267
126	2.89	5.51	121	20.9	1.81	1.92	44.8	1.42	414	63.6	3.34	97.9	1.00	53.5	195
115	3.11	5.84	106	18.5	1.77	1.82	39.4	1.31	371	57.5	3.31	88.4	1.00	41.6	148
105	3.37	6.24	92.1	16.4	1.73	1.72	34.5	1.21	332	51.9	3.28	79.7	1.00	32.1	112
95	3.65	6.78	79.0	14.2	1.68	1.62	29.8	1.10	295	46.5	3.25	71.2	1.00	24.3	82.1
85	4.03	7.31	67.8	12.3	1.65	1.52	25.6	0.994	259	41.2	3.22	62.9	1.00	17.7	58.3
76	4.46	7.89	58.5	10.8	1.62	1.43	22.0	0.896	227	36.4	3.19	55.6	1.00	12.8	41.3
68	4.96	8.49	50.6	9.46	1.59	1.35	19.0	0.805	199	32.1	3.16	48.9	1.00	9.21	28.9
60	5.57	9.24	43.4	8.22	1.57	1.28	16.2	0.716	172	28.0	3.13	42.7	1.00	6.42	19.7
53	6.17	10.6	36.3	6.92	1.53	1.19	13.6	0.637	151	24.7	3.11	37.5	1.00	4.55	13.6
48	6.76	11.6	32.0	6.12	1.51	1.13	11.9	0.580	135	22.2	3.09	33.7	1.00	3.42	10.1
43.5	7.48	12.2	28.9	5.60	1.50	1.10	10.7	0.527	120	19.9	3.07	30.2	1.00	2.54	7.34
39.5	8.22	13.2	25.8	5.03	1.49	1.06	9.49	0.480	108	17.9	3.05	27.1	1.00	1.91	5.43
36	8.99	14.3	23.2	4.54	1.48	1.02	8.48	0.439	97.5	16.2	3.04	24.6	1.00	1.46	4.07
32.5	9.92	15.5	20.6	4.06	1.47	0.985	7.50	0.398	87.2	14.5	3.02	22.0	1.00	1.09	2.97
29	7.82	16.9	19.1	3.76	1.50	1.03	6.97	0.426	53.5	10.7	2.51	16.2	1.00	1.05	2.08
26.5	8.69	17.5	17.7	3.54	1.51	1.02	6.46	0.389	47.9	9.58	2.48	14.5	1.00	0.788	1.53
25	6.31	16.5	18.7	3.79	1.60	1.17	6.88	0.452	28.2	6.97	1.96	10.6	1.00	0.855	1.23
22.5	7.00	18.0	16.6	3.39	1.59	1.13	6.10	0.408	25.0	6.21	1.95	9.47	1.00	0.627	0.885
20	7.77	20.2	14.4	2.95	1.57	1.09	5.28	0.365	22.0	5.50	1.94	8.38	0.885	0.452	0.620
17.5	6.31	20.8	16.0	3.23	1.76	1.30	5.71	0.394	12.2	3.73	1.54	5.73	0.854	0.369	0.437
15	7.41	23.7	13.5	2.75	1.75	1.27	4.83	0.337	10.2	3.12	1.52	4.78	0.707	0.228	0.267
13	8.54	26.6	11.7	2.40	1.75	1.25	4.20	0.295	8.66	2.67	1.51	4.08	0.566	0.150	0.174

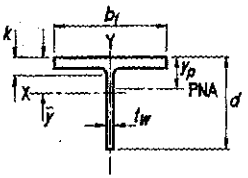

Table 1-8 (continued)
WT-Shapes
Dimensions

Shape	Area, A	Depth, d		Stem				Flange				Distance		
				Thickness, t_w		$\frac{t_w}{2}$	Area	Width, b_f		Thickness, t_f		k		Workable Gage
												k_{des}	k_{det}	
	in.^{2}	in.		in.		in.	in.^{2}	in.		in.		in.	in.	in.
WT6×11[c]	3.24	6.16	6 1/8	0.260	1/4	1/8	1.60	4.03	4	0.425	7/16	0.725	15/16	2 1/4[g]
×9.5[c]	2.79	6.08	6 1/8	0.235	1/4	1/8	1.43	4.01	4	0.350	3/8	0.650	7/8	↓
×8[c]	2.36	6.00	6	0.220	1/4	1/8	1.32	3.99	4	0.265	1/4	0.565	13/16	↓
×7[c,v]	2.08	5.96	6	0.200	3/16	1/8	1.19	3.97	4	0.225	1/4	0.525	3/4	↓
WT5×56	16.5	5.68	5 5/8	0.755	3/4	3/8	4.29	10.4	10 3/8	1.25	1 1/4	1.75	1 15/16	5 1/2
×50	14.7	5.55	5 1/2	0.680	11/16	3/8	3.77	10.3	10 3/8	1.12	1 1/8	1.62	1 13/16	↓
×44	13.0	5.42	5 3/8	0.605	5/8	5/16	3.28	10.3	10 1/4	0.990	1	1.49	1 11/16	↓
×38.5	11.3	5.30	5 1/4	0.530	1/2	1/4	2.81	10.2	10 1/4	0.870	7/8	1.37	1 9/16	↓
×34	10.0	5.20	5 1/4	0.470	1/2	1/4	2.44	10.1	10 1/8	0.770	3/4	1.27	1 7/16	↓
×30	8.84	5.11	5 1/8	0.420	7/16	1/4	2.15	10.1	10 1/8	0.680	11/16	1.18	1 3/8	↓
×27	7.90	5.05	5	0.370	3/8	3/16	1.87	10.0	10	0.615	5/8	1.12	1 5/16	↓
×24.5	7.21	4.99	5	0.340	5/16	3/16	1.70	10.0	10	0.560	9/16	1.06	1 1/4	↓
WT5×22.5	6.63	5.05	5	0.350	3/8	3/16	1.77	8.02	8	0.620	5/8	1.12	1 5/16	↓
×19.5	5.73	4.96	5	0.315	5/16	3/16	1.56	7.99	8	0.530	1/2	1.03	1 3/16	↓
×16.5	4.85	4.87	4 7/8	0.290	5/16	3/16	1.41	7.96	8	0.435	7/16	0.935	1 1/8	↓
WT5×15	4.42	5.24	5 1/4	0.300	5/16	3/16	1.57	5.81	5 3/4	0.510	1/2	0.810	1 1/8	2 3/4[g]
×13[c]	3.81	5.17	5 1/8	0.260	1/4	1/8	1.34	5.77	5 3/4	0.440	7/16	0.740	1 1/16	↓
×11[c]	3.24	5.09	5 1/8	0.240	1/4	1/8	1.22	5.75	5 3/4	0.360	3/8	0.660	15/16	↓
WT5×9.5[c]	2.81	5.12	5 1/8	0.250	1/4	1/8	1.28	4.02	4	0.395	3/8	0.695	15/16	2 1/4[g]
×8.5[c]	2.50	5.06	5	0.240	1/4	1/8	1.21	4.01	4	0.330	5/16	0.630	7/8	↓
×7.5[c]	2.21	5.00	5	0.230	1/4	1/8	1.15	4.00	4	0.270	1/4	0.570	13/16	↓
×6[c,f]	1.77	4.94	4 7/8	0.190	3/16	1/8	0.938	3.96	4	0.210	3/16	0.510	3/4	↓
WT4×33.5	9.84	4.50	4 1/2	0.570	9/16	5/16	2.57	8.28	8 1/4	0.935	15/16	1.33	1 5/8	5 1/2
×29	8.54	4.38	4 3/8	0.510	1/2	1/4	2.23	8.22	8 1/4	0.810	13/16	1.20	1 1/2	↓
×24	7.05	4.25	4 1/4	0.400	3/8	3/16	1.70	8.11	8 1/8	0.685	11/16	1.08	1 3/8	↓
×20	5.87	4.13	4 1/8	0.360	3/8	3/16	1.49	8.07	8 1/8	0.560	9/16	0.954	1 1/4	↓
×17.5	5.14	4.06	4	0.310	5/16	3/16	1.26	8.02	8	0.495	1/2	0.889	1 3/16	↓
×15.5[f]	4.56	4.00	4	0.285	5/16	3/16	1.14	8.00	8	0.435	7/16	0.829	1 1/8	↓
WT4×14	4.12	4.03	4	0.285	5/16	3/16	1.15	6.54	6 1/2	0.465	7/16	0.859	15/16	3 1/2
×12	3.54	3.97	4	0.245	1/4	1/8	0.971	6.50	6 1/2	0.400	3/8	0.794	7/8	3 1/2

[c] Shape is slender for compression with $F_y = 50$ ksi.
[f] Shape exceeds compact limit for flexure with $F_y = 50$ ksi.
[g] The actual size, combination and orientation of fastener components should be compared with the geometry of the cross section to ensure compatibility.
[v] Shear strength controlled by buckling effects ($C_v < 1.0$) with $F_y = 50$ ksi.

Table 1-8 (continued)
WT-Shapes
Properties

WT6-WT4

Nominal Wt.	Compact Section Criteria		Axis X-X						Axis Y-Y				Q_s	Torsional Properties	
	$\frac{b_f}{2t_f}$	$\frac{d}{t_w}$	I	S	r	$\bar{y}$	Z	y_p	I	S	r	Z	$F_y = 50$ ksi	J	C_w
lb/ft			in.^{4}	in.^{3}	in.	in.	in.^{3}	in.	in.^{4}	in.^{3}	in.	in.^{3}		in.^{4}	in.^{6}
11	4.74	23.7	11.7	2.59	1.90	1.63	4.63	0.402	2.33	1.15	0.847	1.83	0.707	0.146	0.137
9.5	5.72	25.9	10.1	2.28	1.90	1.65	4.11	0.348	1.88	0.939	0.821	1.49	0.597	0.0899	0.0934
8	7.53	27.3	8.70	2.04	1.92	1.74	3.72	0.639	1.41	0.706	0.773	1.13	0.537	0.0511	0.0678
7	8.82	29.8	7.67	1.83	1.92	1.76	3.32	0.760	1.18	0.593	0.753	0.947	0.451	0.0350	0.0493
56	4.17	7.52	28.6	6.40	1.32	1.21	13.4	0.791	118	22.6	2.67	34.6	1.00	7.50	16.9
50	4.62	8.16	24.5	5.56	1.29	1.13	11.4	0.711	103	20.0	2.65	30.5	1.00	5.41	11.9
44	5.18	8.96	20.8	4.77	1.27	1.06	9.65	0.631	89.3	17.4	2.63	26.5	1.00	3.75	8.02
38.5	5.86	10.0	17.4	4.05	1.24	0.990	8.06	0.555	76.8	15.1	2.60	22.9	1.00	2.55	5.31
34	6.58	11.1	14.9	3.49	1.22	0.932	6.85	0.493	66.7	13.2	2.58	20.0	1.00	1.78	3.62
30	7.41	12.2	12.9	3.04	1.21	0.884	5.87	0.438	58.1	11.5	2.57	17.5	1.00	1.23	2.46
27	8.15	13.6	11.1	2.64	1.19	0.836	5.05	0.395	51.7	10.3	2.56	15.6	1.00	0.909	1.78
24.5	8.93	14.7	10.0	2.39	1.18	0.807	4.52	0.361	46.7	9.34	2.54	14.1	1.00	0.693	1.33
22.5	6.47	14.4	10.2	2.47	1.24	0.907	4.65	0.413	26.7	6.65	2.01	10.1	1.00	0.753	0.981
19.5	7.53	15.7	8.84	2.16	1.24	0.876	3.99	0.359	22.5	5.64	1.98	8.57	1.00	0.487	0.616
16.5	9.15	16.8	7.71	1.93	1.26	0.869	3.48	0.305	18.3	4.60	1.94	7.00	1.00	0.291	0.356
15	5.70	17.5	9.28	2.24	1.45	1.10	4.01	0.380	8.35	2.87	1.37	4.41	1.00	0.310	0.273
13	6.56	19.9	7.86	1.91	1.44	1.06	3.39	0.330	7.05	2.44	1.36	3.75	0.900	0.201	0.173
11	7.99	21.2	6.88	1.72	1.46	1.07	3.02	0.282	5.71	1.99	1.33	3.05	0.834	0.119	0.107
9.5	5.09	20.5	6.68	1.74	1.54	1.28	3.10	0.349	2.15	1.07	0.874	1.67	0.870	0.116	0.0796
8.5	6.08	21.1	6.06	1.62	1.56	1.32	2.90	0.311	1.78	0.887	0.844	1.40	0.839	0.0776	0.0610
7.5	7.41	21.7	5.45	1.50	1.57	1.37	2.71	0.305	1.45	0.723	0.810	1.15	0.809	0.0518	0.0475
6	9.43	26.0	4.35	1.22	1.57	1.36	2.20	0.322	1.09	0.551	0.785	0.869	0.592	0.0272	0.0255
33.5	4.43	7.89	10.9	3.05	1.05	0.936	6.29	0.594	44.3	10.7	2.12	16.3	1.00	2.51	3.56
29	5.07	8.59	9.12	2.61	1.03	0.874	5.25	0.520	37.5	9.13	2.10	13.9	1.00	1.66	2.28
24	5.92	10.6	6.85	1.97	0.986	0.777	3.94	0.435	30.5	7.51	2.08	11.4	1.00	0.977	1.30
20	7.21	11.5	5.73	1.69	0.988	0.735	3.25	0.364	24.5	6.08	2.04	9.24	1.00	0.558	0.715
17.5	8.10	13.1	4.82	1.43	0.968	0.688	2.71	0.321	21.3	5.31	2.03	8.05	1.00	0.384	0.480
15.5	9.19	14.0	4.28	1.28	0.969	0.668	2.39	0.285	18.5	4.64	2.02	7.03	1.00	0.267	0.327
14	7.03	14.1	4.23	1.28	1.01	0.734	2.38	0.315	10.8	3.31	1.62	5.04	1.00	0.268	0.230
12	8.12	16.2	3.53	1.08	0.999	0.695	1.98	0.272	9.14	2.81	1.61	4.28	1.00	0.173	0.144

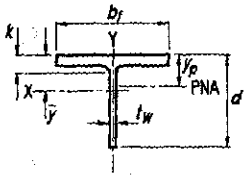

Table 1-8 (continued)
WT-Shapes
Dimensions

Shape	Area, A	Depth, d	Stem			Flange				Distance		
			Thickness, t_w	$\frac{t_w}{2}$	Area	Width, b_f		Thickness, t_f		k		Workable Gage
										k_{des}	k_{det}	
	in.^{2}	in.	in.	in.	in.^{2}	in.		in.		in.	in.	in.
WT4×10.5	3.08	4.14	0.250	1/4	1/8	1.04	5.27	5 1/4	0.400	3/8	0.700	7/8	2 3/4[g]
×9	2.63	4.07	0.230	1/4	1/8	0.936	5.25	5 1/4	0.330	5/16	0.630	13/16	2 3/4[g]
WT4×7.5	2.22	4.06	0.245	1/4	1/8	0.993	4.02	4	0.315	5/16	0.615	13/16	2 1/4[g]
×6.5	1.92	4.00	0.230	1/4	1/8	0.919	4.00	4	0.255	1/4	0.555	3/4	↓
×5[c,f]	1.48	3.95	0.170	3/16	1/8	0.671	3.94	4	0.205	3/16	0.505	11/16	
WT3×12.5	3.67	3.19	0.320	5/16	3/16	1.02	6.08	6 1/8	0.455	7/16	0.705	15/16	3 1/2
×10	2.94	3.10	0.260	1/4	1/8	0.806	6.02	6	0.365	3/8	0.615	7/8	↓
×7.5[f]	2.21	3.00	0.230	1/4	1/8	0.689	5.99	6	0.260	1/4	0.510	3/4	
WT3×8	2.37	3.14	0.260	1/4	1/8	0.816	4.03	4	0.405	3/8	0.655	7/8	2 1/4[g]
×6	1.78	3.02	0.230	1/4	1/8	0.693	4.00	4	0.280	1/4	0.530	3/4	↓
×4.5[f]	1.34	2.95	0.170	3/16	1/8	0.502	3.94	4	0.215	3/16	0.465	11/16	
×4.25[f]	1.26	2.92	0.170	3/16	1/8	0.496	3.94	4	0.195	3/16	0.445	11/16	
WT2.5×9.5	2.78	2.56	0.270	1/4	1/8	0.695	5.03	5	0.430	7/16	0.730	13/16	2 3/4
×8	2.35	2.51	0.240	1/4	1/8	0.601	5.00	5	0.360	3/8	0.660	3/4	2 3/4
WT2×6.5	1.91	2.08	0.280	1/4	1/8	0.582	4.06	4	0.345	3/8	0.595	3/4	2 1/4

[c] Shape is slender for compression with $F_y = 50$ ksi.
[f] Shape exceeds compact limit for flexure with $F_y = 50$ ksi.
[g] The actual size, combination and orientation of fastener components should be compared with the geometry of the cross section to ensure compatibility.

Table 1-8 (continued)
WT-Shapes
Properties

WT4-WT2

Nominal Wt.	Compact Section Criteria		Axis X-X						Axis Y-Y				Q_s	Torsional Properties	
	$\frac{b_f}{2t_f}$	$\frac{d}{t_w}$	I	S	r	$\bar{y}$	Z	y_p	I	S	r	Z	$F_y = 50$ ksi	J	C_w
lb/ft			in.^{4}	in.^{3}	in.	in.	in.^{3}	in.	in.^{4}	in.^{3}	in.	in.^{3}		in.^{4}	in.^{6}
10.5	6.59	16.6	3.90	1.18	1.12	0.831	2.11	0.292	4.88	1.85	1.26	2.84	1.00	0.141	0.0916
9	7.95	17.7	3.41	1.05	1.14	0.834	1.86	0.251	3.98	1.52	1.23	2.33	1.00	0.0855	0.0562
7.5	6.37	16.6	3.28	1.07	1.22	0.998	1.91	0.276	1.70	0.849	0.876	1.33	1.00	0.0679	0.0382
6.5	7.84	17.4	2.89	0.974	1.23	1.03	1.74	0.240	1.36	0.682	0.843	1.07	1.00	0.0433	0.0269
5	9.61	23.2	2.15	0.717	1.20	0.953	1.27	0.188	1.05	0.531	0.840	0.826	0.733	0.0212	0.0114
12.5	6.68	10.0	2.29	0.886	0.789	0.610	1.68	0.302	8.53	2.81	1.52	4.28	1.00	0.229	0.171
10	8.25	11.9	1.76	0.693	0.774	0.560	1.29	0.244	6.64	2.21	1.50	3.36	1.00	0.120	0.0858
7.5	11.5	13.0	1.41	0.577	0.797	0.558	1.03	0.185	4.66	1.56	1.45	2.37	1.00	0.0504	0.0342
8	4.98	12.1	1.69	0.685	0.844	0.676	1.25	0.294	2.21	1.10	0.966	1.69	1.00	0.111	0.0426
6	7.14	13.1	1.32	0.564	0.862	0.677	1.01	0.222	1.50	0.748	0.918	1.16	1.00	0.0449	0.0178
4.5	9.16	17.4	0.950	0.408	0.842	0.623	0.720	0.170	1.10	0.557	0.905	0.856	1.00	0.0202	0.00736
4.25	10.1	17.2	0.905	0.397	0.848	0.637	0.700	0.160	0.995	0.505	0.890	0.778	1.00	0.0166	0.00620
9.5	5.85	9.56	1.01	0.485	0.604	0.487	0.970	0.276	4.56	1.81	1.28	2.76	1.00	0.157	0.0775
8	6.94	10.5	0.845	0.413	0.599	0.458	0.801	0.235	3.75	1.50	1.26	2.28	1.00	0.0958	0.0453
6.5	5.88	7.43	0.526	0.321	0.524	0.440	0.616	0.236	1.93	0.950	1.00	1.46	1.00	0.0750	0.0233

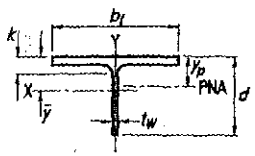

Table 1-9
MT-Shapes
Dimensions

Shape	Area, A	Depth, d		Stem				Flange				Distance	
				Thickness, t_w		$\frac{t_w}{2}$	Area	Width, b_f		Thickness, t_f		k	Workable Gage
	in.^{2}	in.		in.		in.	in.^{2}	in.		in.		in.	in.
MT6.25×6.2[c,v]	1.82	6.27	6 1/4	0.155	1/8	1/16	0.971	3.75	3 3/4	0.228	1/4	9/16	—
×5.8[c,v]	1.70	6.25	6 1/4	0.155	1/8	1/16	0.969	3.50	3 1/2	0.211	3/16	9/16	
MT6×5.9[c]	1.74	6.00	6	0.177	3/16	1/8	1.06	3.07	3 1/8	0.225	1/4	9/16	—
×5.4[c,v]	1.59	5.99	6	0.160	3/16	1/8	0.958	3.07	3 1/8	0.210	3/16	9/16	—
×5[c,v]	1.48	5.99	6	0.149	1/8	1/16	0.892	3.25	3 1/4	0.180	3/16	1/2	—
MT5×4.5[c]	1.33	5.00	5	0.157	3/16	1/8	0.785	2.69	2 3/4	0.206	3/16	9/16	—
×4[c]	1.19	4.98	5	0.141	1/8	1/16	0.701	2.69	2 3/4	0.182	3/16	9/16	—
MT5×3.75[c,v]	1.11	5.00	5	0.130	1/8	1/16	0.649	2.69	2 3/4	0.173	3/16	7/16	—
MT4×3.25[c,v]	0.959	4.00	4	0.135	1/8	1/16	0.540	2.28	2 1/4	0.189	3/16	9/16	—
×3.1[c]	0.911	4.00	4	0.129	1/8	1/16	0.516	2.28	2 1/4	0.177	3/16	7/16	—
MT3×2.2[c]	0.647	3.00	3	0.114	1/8	1/16	0.342	1.84	1 7/8	0.171	3/16	3/8	—
×1.85[c]	0.545	2.96	3	0.0980	1/8	1/16	0.290	2.00	2	0.129	1/8	5/16	—
MT2.5×9.45[f]	2.78	2.50	2 1/2	0.316	5/16	3/16	0.790	5.00	5	0.416	7/16	13/16	2 3/4[g]
MT2×3[f]	0.875	1.90	1 7/8	0.130	1/8	1/16	0.247	3.80	3 3/4	0.160	3/16	1/2	—

[c] Shape is slender for compression with $F_y = 36$ ksi.
[f] Shape exceeds compact limit for flexure with $F_y = 36$ ksi.
[g] The actual size, combination and orientation of fastener components should be compared with the geometry of the cross section to ensure compatibility.
[f] This shape has tapered flanges while all other MT-shapes have parallel flange surfaces.
[v] Shape does not meet the h/t_w limit for shear in AISC *Specification* Section G2.1(a) with $F_y = 36$ ksi.
— Indicates flange is too narrow to establish a workable gage.

Table 1-9 (continued)
MT-Shapes
Properties

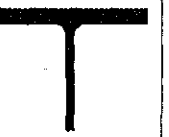
MT-SHAPES

Nominal Wt.	Compact Section Criteria		Axis X-X						Axis Y-Y				Q_s	Torsional Properties	
	$\frac{b_f}{2t_f}$	$\frac{d}{t_w}$	I	S	r	$\bar{y}$	Z	y_p	I	S	r	Z	$F_y = 36$ ksi	J	C_w
lb/ft			in.^{4}	in.^{3}	in.	in.	in.^{3}	in.	in.^{4}	in.^{3}	in.	in.^{3}		in.^{4}	in.^{6}
6.2	8.22	40.4	7.29	1.61	2.01	1.74	2.92	0.372	1.00	0.536	0.746	0.839	0.341	0.0246	0.0284
5.8	8.29	40.3	6.94	1.57	2.03	1.84	2.86	0.808	0.756	0.432	0.669	0.684	0.342	0.0206	0.0268
5.9	6.82	33.9	6.61	1.61	1.96	1.89	2.89	1.13	0.543	0.354	0.561	0.575	0.484	0.0249	0.0337
5.4	7.31	37.4	6.03	1.46	1.95	1.86	2.63	1.05	0.506	0.330	0.566	0.532	0.397	0.0196	0.0250
5	9.03	40.2	5.62	1.36	1.96	1.86	2.45	1.08	0.517	0.318	0.594	0.509	0.344	0.0145	0.0202
4.5	6.53	31.8	3.47	1.00	1.62	1.54	1.81	0.808	0.336	0.250	0.505	0.403	0.550	0.0156	0.0138
4	7.39	35.3	3.08	0.894	1.62	1.52	1.61	0.809	0.296	0.220	0.502	0.354	0.446	0.0112	0.00989
3.75	7.77	38.4	2.91	0.836	1.63	1.51	1.51	0.759	0.281	0.209	0.505	0.334	0.377	0.00932	0.00792
3.25	6.03	29.6	1.57	0.558	1.29	1.18	1.01	0.472	0.188	0.165	0.444	0.264	0.634	0.00917	0.00463
3.1	6.44	31.0	1.50	0.533	1.29	1.18	0.967	0.497	0.176	0.154	0.441	0.247	0.578	0.00778	0.00403
2.2	5.38	26.3	0.579	0.268	0.949	0.841	0.483	0.190	0.0897	0.0973	0.374	0.155	0.778	0.00494	0.00124
1.85	7.75	30.2	0.483	0.226	0.945	0.827	0.409	0.174	0.0863	0.0863	0.400	0.136	0.609	0.00265	0.000754
9.45	6.01	7.91	1.05	0.528	0.617	0.512	1.03	0.276	4.35	1.74	1.26	2.66	1.00	0.156	0.0732
3	11.9	14.6	0.208	0.133	0.493	0.341	0.241	0.112	0.732	0.385	0.926	0.588	1.00	0.00919	0.00193

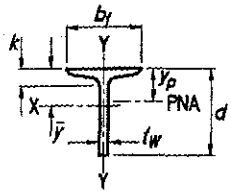

Table 1-10
ST-Shapes
Dimensions

Shape	Area, A	Depth, d		Stem				Flange					Distance	
				Thickness, t_w		$\frac{t_w}{2}$	Area	Width, b_f		Thickness, t_f			k	Workable Gage
	in.^{2}	in.		in.		in.	in.^{2}	in.		in.			in.	in.
ST12×60.5	17.8	12.3	12 1/4	0.800	13/16	7/16	9.80	8.05	8	1.09	1 1/16		2	4
×53	15.6	12.3	12 1/4	0.620	5/8	5/16	7.60	7.87	7 7/8	1.09	1 1/16		2	4
ST12×50	14.7	12.0	12	0.745	3/4	3/8	8.94	7.25	7 1/4	0.870	7/8		1 3/4	4
×45	13.2	12.0	12	0.625	5/8	5/16	7.50	7.13	7 1/8	0.870	7/8		1 3/4	4
×40[c]	11.7	12.0	12	0.500	1/2	1/4	6.00	7.00	7	0.870	7/8		1 3/4	4
ST10×48	14.1	10.2	10 1/8	0.800	13/16	7/16	8.12	7.20	7 1/4	0.920	15/16		1 3/4	4
×43	12.7	10.2	10 1/8	0.660	11/16	3/8	6.70	7.06	7	0.920	15/16		1 3/4	4
ST10×37.5	11.0	10.0	10	0.635	5/8	5/16	6.35	6.39	6 3/8	0.795	13/16		1 5/8	3 1/2[g]
×33	9.70	10.0	10	0.505	1/2	1/4	5.05	6.26	6 1/4	0.795	13/16		1 5/8	3 1/2[g]
ST9×35	10.3	9.00	9	0.711	11/16	3/8	6.40	6.25	6 1/4	0.691	11/16		1 1/2	3 1/2[g]
×27.35	8.02	9.00	9	0.461	7/16	1/4	4.15	6.00	6	0.691	11/16		1 1/2	3 1/2[g]
ST7.5×25	7.34	7.50	7 1/2	0.550	9/16	5/16	4.13	5.64	5 5/8	0.622	5/8		1 3/8	3 1/2[g]
×21.45	6.30	7.50	7 1/2	0.411	7/16	1/4	3.08	5.50	5 1/2	0.622	5/8		1 3/8	3 1/2[g]
ST6×25	7.33	6.00	6	0.687	11/16	3/8	4.12	5.48	5 1/2	0.659	11/16		1 7/16	3[g]
×20.4	5.96	6.00	6	0.462	7/16	1/4	2.77	5.25	5 1/4	0.659	11/16		1 7/16	3[g]
ST6×17.5	5.12	6.00	6	0.428	7/16	1/4	2.57	5.08	5 1/8	0.544	9/16		1 3/16	3[g]
×15.9	4.65	6.00	6	0.350	3/8	3/16	2.10	5.00	5	0.544	9/16		1 3/16	3[g]
ST5×17.5	5.14	5.00	5	0.594	5/8	5/16	2.97	4.94	5	0.491	1/2		1 1/8	2 3/4[g]
×12.7	3.72	5.00	5	0.311	5/16	3/16	1.56	4.66	4 5/8	0.491	1/2		1 1/8	2 3/4[g]
ST4×11.5	3.38	4.00	4	0.441	7/16	1/4	1.76	4.17	4 1/8	0.425	7/16		1	2 1/4[g]
×9.2	2.70	4.00	4	0.271	1/4	1/8	1.08	4.00	4	0.425	7/16		1	2 1/4[g]
ST3×8.6	2.53	3.00	3	0.465	7/16	1/4	1.40	3.57	3 5/8	0.359	3/8		13/16	—
×6.25	1.83	3.00	3	0.232	1/4	1/8	0.696	3.33	3 3/8	0.359	3/8		13/16	—
ST2.5×5	1.46	2.50	2 1/2	0.214	3/16	1/8	0.535	3.00	3	0.326	5/16		3/4	—
ST2×4.75	1.40	2.00	2	0.326	5/16	3/16	0.652	2.80	2 3/4	0.293	5/16		3/4	—
×3.85	1.13	2.00	2	0.193	3/16	1/8	0.386	2.66	2 5/8	0.293	5/16		3/4	—
ST1.5×3.75	1.10	1.50	1 1/2	0.349	3/8	3/16	0.524	2.51	2 1/2	0.260	1/4		5/8	—
×2.85	0.830	1.50	1 1/2	0.170	3/16	1/8	0.255	2.33	2 3/8	0.260	1/4		5/8	—

[c] Shape is slender for compression with F_y = 36 ksi

[g] The actual size, combination and orientation of fastener components should be compared with the geometry of the cross section to ensure compatibility.

— Indicates flange is too narrow to establish a workable gage.

Table 1-10 (continued)
ST-Shapes
Properties

ST-SHAPES

Nominal Wt.	Compact Section Criteria		Axis X-X						Axis Y-Y				Q_s	Torsional Properties	
	$\frac{b_f}{2t_f}$	$\frac{d}{t_w}$	I	S	r	$\bar{y}$	Z	y_p	I	S	r	Z	$F_y = 36$ ksi	J	C_w
lb/ft			in.^{4}	in.^{3}	in.	in.	in.^{3}	in.	in.^{4}	in.^{3}	in.	in.^{3}		in.^{4}	in.
60.5	3.69	15.4	259	30.1	3.82	3.63	54.5	1.26	41.5	10.3	1.53	18.1	1.00	6.38	27.5
53	3.61	19.8	216	24.1	3.72	3.28	43.3	1.02	38.4	9.76	1.57	16.7	1.00	5.05	15.0
50	4.17	16.1	215	26.3	3.83	3.84	47.5	2.16	23.7	6.55	1.27	12.0	1.00	3.76	19.5
45	4.10	19.2	190	22.6	3.79	3.60	41.1	1.42	22.3	6.27	1.30	11.2	1.00	3.01	12.1
40	4.02	24.0	162	18.6	3.72	3.30	33.6	0.909	21.0	6.00	1.34	10.4	0.876	2.44	6.94
48	3.91	12.7	143	20.3	3.18	3.13	36.9	1.35	25.0	6.93	1.33	12.5	1.00	4.16	15.0
43	3.84	15.4	124	17.2	3.13	2.91	31.1	0.972	23.3	6.59	1.36	11.6	1.00	3.30	9.17
37.5	4.02	15.7	109	15.8	3.15	3.07	28.6	1.34	14.8	4.62	1.16	8.36	1.00	2.28	7.21
33	3.94	19.8	92.9	12.9	3.10	2.81	23.4	0.841	13.7	4.39	1.19	7.70	1.00	1.78	4.02
35	4.52	12.7	84.5	14.0	2.87	2.94	25.1	1.78	12.0	3.84	1.08	7.17	1.00	2.02	7.03
27.35	4.34	19.5	62.3	9.60	2.79	2.51	17.3	0.737	10.4	3.45	1.14	6.06	1.00	1.16	2.26
25	4.53	13.6	40.5	7.72	2.35	2.25	14.0	0.826	7.79	2.76	1.03	4.99	1.00	1.05	2.02
21.45	4.42	18.2	32.9	5.99	2.29	2.01	10.8	0.605	7.13	2.59	1.06	4.54	1.00	0.765	0.995
25	4.17	8.73	25.1	6.04	1.85	1.84	11.0	0.758	7.79	2.84	1.03	5.16	1.00	1.36	1.97
20.4	3.98	13.0	18.9	4.27	1.78	1.58	7.71	0.577	6.74	2.57	1.06	4.43	1.00	0.842	0.787
17.5	4.67	14.0	17.2	3.95	1.83	1.65	7.12	0.543	4.92	1.94	0.980	3.40	1.00	0.524	0.556
15.9	4.60	17.1	14.8	3.30	1.78	1.51	5.94	0.480	4.66	1.87	1.00	3.22	1.00	0.438	0.364
17.5	5.03	8.42	12.5	3.62	1.56	1.56	6.58	0.673	4.15	1.68	0.899	3.10	1.00	0.633	0.725
12.7	4.75	16.1	7.79	2.05	1.45	1.20	3.70	0.403	3.36	1.44	0.950	2.49	1.00	0.300	0.173
11.5	4.91	9.07	5.00	1.76	1.22	1.15	3.19	0.439	2.13	1.02	0.795	1.84	1.00	0.271	0.168
9.2	4.71	14.8	3.49	1.14	1.14	0.942	2.07	0.336	1.84	0.922	0.827	1.59	1.00	0.167	0.0642
8.6	4.97	6.45	2.12	1.02	0.915	0.915	1.85	0.394	1.14	0.642	0.673	1.17	1.00	0.181	0.0772
6.25	4.64	12.9	1.26	0.547	0.831	0.692	1.01	0.271	0.901	0.541	0.702	0.930	1.00	0.0830	0.0197
5	4.60	11.7	0.671	0.348	0.677	0.570	0.650	0.239	0.597	0.398	0.638	0.686	1.00	0.0568	0.01000
4.75	4.78	6.13	0.462	0.319	0.575	0.553	0.592	0.250	0.444	0.317	0.564	0.565	1.00	0.0590	0.00995
3.85	4.54	10.4	0.307	0.198	0.522	0.448	0.381	0.204	0.374	0.281	0.576	0.485	1.00	0.0364	0.00457
3.75	4.83	4.30	0.200	0.187	0.426	0.432	0.357	0.219	0.289	0.230	0.513	0.411	1.00	0.0432	0.00496
2.85	4.48	8.82	0.114	0.0970	0.370	0.329	0.196	0.171	0.223	0.192	0.518	0.328	1.00	0.0216	0.00189

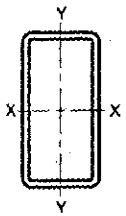

Table 1-11
Rectangular HSS
Dimensions and Properties

Shape	Design Wall Thick-ness, t	Nominal Wt.	Area, A	b/t	h/t	Axis X-X			
						I	S	r	Z
	in.	lb/ft	in.^{2}			in.^{4}	in.^{3}	in.	in.^{3}
HSS20×12×5/8	0.581	127.37	35.0	17.7	31.4	1880	188	7.33	230
×1/2	0.465	103.30	28.3	22.8	40.0	1550	155	7.39	188
×3/8	0.349	78.52	21.5	31.4	54.3	1200	120	7.45	144
×5/16	0.291	65.87	18.1	38.2	65.7	1010	101	7.48	122
HSS20×8×5/8	0.581	110.36	30.3	10.8	31.4	1440	144	6.89	185
×1/2	0.465	89.68	24.6	14.2	40.0	1190	119	6.96	152
×3/8	0.349	68.31	18.7	19.9	54.3	926	92.6	7.03	117
×5/16	0.291	57.36	15.7	24.5	65.7	786	78.6	7.07	98.6
HSS20×4×1/2	0.465	76.07	20.9	5.60	40.0	838	83.8	6.33	115
×3/8	0.349	58.10	16.0	8.46	54.3	657	65.7	6.42	89.3
×5/16	0.291	48.86	13.4	10.7	65.7	560	56.0	6.46	75.6
×1/4	0.233	39.43	10.8	14.2	82.8	458	45.8	6.50	61.5
HSS18×6×5/8	0.581	93.34	25.7	7.33	28.0	923	103	6.00	135
×1/2	0.465	76.07	20.9	9.90	35.7	770	85.6	6.07	112
×3/8	0.349	58.10	16.0	14.2	48.6	602	66.9	6.15	86.4
×5/16	0.291	48.86	13.4	17.6	58.9	513	57.0	6.18	73.1
×1/4	0.233	39.43	10.8	22.8	74.3	419	46.5	6.22	59.4
HSS16×12×5/8	0.581	110.36	30.3	17.7	24.5	1090	136	6.00	165
×1/2	0.465	89.68	24.6	22.8	31.4	904	113	6.06	135
×3/8	0.349	68.31	18.7	31.4	42.8	702	87.7	6.12	104
×5/16	0.291	57.36	15.7	38.2	52.0	595	74.4	6.15	87.7
HSS16×8×5/8	0.581	93.34	25.7	10.8	24.5	815	102	5.64	129
×1/2	0.465	76.07	20.9	14.2	31.4	679	84.9	5.70	106
×3/8	0.349	58.10	16.0	19.9	42.8	531	66.3	5.77	82.1
×5/16	0.291	48.86	13.4	24.5	52.0	451	56.4	5.80	69.4
×1/4	0.233	39.43	10.8	31.3	65.7	368	46.1	5.83	56.4
HSS16×4×5/8	0.581	76.33	21.0	3.88	24.5	539	67.3	5.06	92.9
×1/2	0.465	62.46	17.2	5.60	31.4	455	56.9	5.15	77.3
×3/8	0.349	47.90	13.2	8.46	42.8	360	45.0	5.23	60.2
×5/16	0.291	40.35	11.1	10.7	52.0	308	38.5	5.27	51.1
×1/4	0.233	32.63	8.96	14.2	65.7	253	31.6	5.31	41.7
×3/16	0.174	24.73	6.76	20.0	89.0	193	24.2	5.35	31.7

Note: For compactness criteria, refer to Table 1-12A.

Table 1-11 (continued)
Rectangular HSS
Dimensions and Properties

HSS20-HSS16

Shape	Axis Y-Y				Workable Flat		Torsion		Surface Area
	I	*S*	*r*	*Z*	Depth	Width	*J*	*C*	
	in.^{4}	in.^{3}	in.	in.^{3}	in.	in.	in.^{4}	in.^{3}	ft^2/ft
HSS20×12×5/8	851	142	4.930	162	17 3/16	9 3/16	1890	257	5.17
×1/2	705	117	4.99	132	17 3/4	9 3/4	1540	209	5.20
×3/8	547	91.1	5.04	102	18 5/16	10 5/16	1180	160	5.23
×5/16	464	77.3	5.07	85.8	18 5/8	10 5/8	997	134	5.25
HSS20×8×5/8	338	84.6	3.34	96.4	17 3/16	5 3/16	916	167	4.50
×1/2	283	70.8	3.39	79.5	17 3/4	5 3/4	757	137	4.53
×3/8	222	55.6	3.44	61.5	18 5/16	6 5/16	586	105	4.57
×5/16	189	47.4	3.47	52.0	18 5/8	6 5/8	496	88.3	4.58
HSS20×4×1/2	58.7	29.3	1.68	34.0	17 3/4	—	195	63.8	3.87
×3/8	47.6	23.8	1.73	26.8	18 5/16	2 5/16	156	49.9	3.90
×5/16	41.2	20.6	1.75	22.9	18 5/8	2 5/8	134	42.4	3.92
×1/4	34.3	17.1	1.78	18.7	18 7/8	2 7/8	111	34.7	3.93
HSS18×6×5/8	158	52.7	2.48	61.0	15 3/16	3 3/16	462	109	3.83
×1/2	134	44.6	2.53	50.7	15 3/4	3 3/4	387	89.9	3.87
×3/8	106	35.5	2.58	39.5	16 5/16	4 5/16	302	69.5	3.90
×5/16	91.3	30.4	2.61	33.5	16 9/16	4 9/16	257	58.7	3.92
×1/4	75.1	25.0	2.63	27.3	16 7/8	4 7/8	210	47.7	3.93
HSS16×12×5/8	700	117	4.80	135	13 3/16	9 3/16	1370	204	4.50
×1/2	581	96.8	4.86	111	13 3/4	9 3/4	1120	166	4.53
×3/8	452	75.3	4.91	85.5	14 5/16	10 5/16	862	127	4.57
×5/16	384	64.0	4.94	72.2	14 5/8	10 5/8	727	107	4.58
HSS16×8×5/8	274	68.6	3.27	79.2	13 3/16	5 3/16	681	132	3.83
×1/2	230	57.6	3.32	65.5	13 3/4	5 3/4	563	108	3.87
×3/8	181	45.3	3.37	50.8	14 5/16	6 5/16	436	83.4	3.90
×5/16	155	38.7	3.40	43.0	14 5/8	6 5/8	369	70.4	3.92
×1/4	127	31.7	3.42	35.0	14 7/8	6 7/8	300	57.0	3.93
HSS16×4×5/8	54.1	27.0	1.60	32.5	13 3/16	—	174	60.5	3.17
×1/2	47.0	23.5	1.65	27.4	13 3/4	—	150	50.7	3.20
×3/8	38.3	19.1	1.71	21.7	14 5/16	2 5/16	120	39.7	3.23
×5/16	33.2	16.6	1.73	18.5	14 5/8	2 5/8	103	33.8	3.25
×1/4	27.7	13.8	1.76	15.2	14 7/8	2 7/8	85.2	27.6	3.27
×3/16	21.5	10.8	1.78	11.7	15 3/16	3 3/16	65.5	21.1	3.28

— Indicates flat depth or width is too small to establish a workable flat.

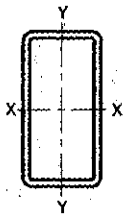

Table 1-11 (continued)
Rectangular HSS
Dimensions and Properties

Shape	Design Wall Thickness, t	Nominal Wt.	Area, A	b/t	h/t	Axis X-X			
						I	S	r	Z
	in.	lb/ft	in.^{2}			in.^{4}	in.^{3}	in.	in.^{3}
HSS14×10×5/8	0.581	93.34	25.7	14.2	21.1	687	98.2	5.17	120
×1/2	0.465	76.07	20.9	18.5	27.1	573	81.8	5.23	98.8
×3/8	0.349	58.10	16.0	25.7	37.1	447	63.9	5.29	76.3
×5/16	0.291	48.86	13.4	31.4	45.1	380	54.3	5.32	64.6
×1/4	0.233	39.43	10.8	39.9	57.1	310	44.3	5.35	52.4
HSS14×6×5/8	0.581	76.33	21.0	7.33	21.1	478	68.3	4.77	88.7
×1/2	0.465	62.46	17.2	9.90	27.1	402	57.4	4.84	73.6
×3/8	0.349	47.90	13.2	14.2	37.1	317	45.3	4.91	57.3
×5/16	0.291	40.35	11.1	17.6	45.1	271	38.7	4.94	48.6
×1/4	0.233	32.63	8.96	22.8	57.1	222	31.7	4.98	39.6
×3/16	0.174	24.73	6.76	31.5	77.5	170	24.3	5.01	30.1
HSS14×4×5/8	0.581	67.82	18.7	3.88	21.1	373	53.3	4.47	73.1
×1/2	0.465	55.66	15.3	5.60	27.1	317	45.3	4.55	61.0
×3/8	0.349	42.79	11.8	8.46	37.1	252	36.0	4.63	47.8
×5/16	0.291	36.10	9.92	10.7	45.1	216	30.9	4.67	40.6
×1/4	0.233	29.23	8.03	14.2	57.1	178	25.4	4.71	33.2
×3/16	0.174	22.18	6.06	20.0	77.5	137	19.5	4.74	25.3
HSS12×10×1/2	0.465	69.27	19.0	18.5	22.8	395	65.9	4.56	78.8
×3/8	0.349	53.00	14.6	25.7	31.4	310	51.6	4.61	61.1
×5/16	0.291	44.60	12.2	31.4	38.2	264	44.0	4.64	51.7
×1/4	0.233	36.03	9.90	39.9	48.5	216	36.0	4.67	42.1
HSS12×8×5/8	0.581	76.33	21.0	10.8	17.7	397	66.1	4.34	82.1
×1/2	0.465	62.46	17.2	14.2	22.8	333	55.6	4.41	68.1
×3/8	0.349	47.90	13.2	19.9	31.4	262	43.7	4.47	53.0
×5/16	0.291	40.35	11.1	24.5	38.2	224	37.4	4.50	44.9
×1/4	0.233	32.63	8.96	31.3	48.5	184	30.6	4.53	36.6
×3/16	0.174	24.73	6.76	43.0	66.0	140	23.4	4.56	27.8
HSS12×6×5/8	0.581	67.82	18.7	7.33	17.7	321	53.4	4.14	68.8
×1/2	0.465	55.66	15.3	9.90	22.8	271	45.2	4.21	57.4
×3/8	0.349	42.79	11.8	14.2	31.4	215	35.9	4.28	44.8
×5/16	0.291	36.10	9.92	17.6	38.2	184	30.7	4.31	38.1
×1/4	0.233	29.23	8.03	22.8	48.5	151	25.2	4.34	31.1
×3/16	0.174	22.18	6.06	31.5	66.0	116	19.4	4.38	23.7

Note: For compactness criteria, refer to Table 1-12A.

Table 1-11 (continued)
Rectangular HSS
Dimensions and Properties

HSS14-HSS12

Shape	Axis Y-Y				Workable Flat		Torsion		Surface Area
	I	S	r	Z	Depth	Width	J	C	
	in.^{4}	in.^{3}	in.	in.^{3}	in.	in.	in.^{4}	in.^{3}	ft^2/ft
HSS14×10×5/8	407	81.5	3.98	95.1	11 3/16	7 3/16	832	146	3.83
×1/2	341	68.1	4.04	78.5	11 3/4	7 3/4	685	120	3.87
×3/8	267	53.4	4.09	60.7	12 5/16	8 5/16	528	91.8	3.90
×5/16	227	45.5	4.12	51.4	12 9/16	8 9/16	446	77.4	3.92
×1/4	186	37.2	4.14	41.8	12 7/8	8 7/8	362	62.6	3.93
HSS14×6×5/8	124	41.2	2.43	48.4	11 3/16	3 3/16	334	83.7	3.17
×1/2	105	35.1	2.48	40.4	11 3/4	3 3/4	279	69.3	3.20
×3/8	84.1	28.0	2.53	31.6	12 5/16	4 5/16	219	53.7	3.23
×5/16	72.3	24.1	2.55	26.9	12 9/16	4 9/16	186	45.5	3.25
×1/4	59.6	19.9	2.58	22.0	12 7/8	4 7/8	152	36.9	3.27
×3/16	45.9	15.3	2.61	16.7	13 3/16	5 3/16	116	28.0	3.28
HSS14×4×5/8	47.2	23.6	1.59	28.5	11 1/4	—	148	52.6	2.83
×1/2	41.2	20.6	1.64	24.1	11 3/4	—	127	44.1	2.87
×3/8	33.6	16.8	1.69	19.1	12 1/4	2 1/4	102	34.6	2.90
×5/16	29.2	14.6	1.72	16.4	12 5/8	2 5/8	87.7	29.5	2.92
×1/4	24.4	12.2	1.74	13.5	12 7/8	2 7/8	72.4	24.1	2.93
×3/16	19.0	9.48	1.77	10.3	13 1/8	3 1/8	55.8	18.4	2.95
HSS12×10×1/2	298	59.7	3.96	69.6	9 3/4	7 3/4	545	102	3.53
×3/8	234	46.9	4.01	54.0	10 5/16	8 5/16	421	78.3	3.57
×5/16	200	40.0	4.04	45.7	10 9/16	8 9/16	356	66.1	3.58
×1/4	164	32.7	4.07	37.2	10 7/8	8 7/8	289	53.5	3.60
HSS12×8×5/8	210	52.5	3.16	61.9	9 3/16	5 3/16	454	97.7	3.17
×1/2	178	44.4	3.21	51.5	9 3/4	5 3/4	377	80.4	3.20
×3/8	140	35.1	3.27	40.1	10 5/16	6 5/16	293	62.1	3.23
×5/16	120	30.1	3.29	34.1	10 9/16	6 9/16	248	52.4	3.25
×1/4	98.8	24.7	3.32	27.8	10 7/8	6 7/8	202	42.5	3.27
×3/16	75.7	18.9	3.35	21.1	11 1/8	7 1/8	153	32.2	3.28
HSS12×6×5/8	107	35.5	2.39	42.1	9 3/16	3 3/16	271	71.1	2.83
×1/2	91.1	30.4	2.44	35.2	9 3/4	3 3/4	227	59.0	2.87
×3/8	72.9	24.3	2.49	27.7	10 5/16	4 5/16	178	45.8	2.90
×5/16	62.8	20.9	2.52	23.6	10 9/16	4 9/16	152	38.8	2.92
×1/4	51.9	17.3	2.54	19.3	10 7/8	4 7/8	124	31.6	2.93
×3/16	40.0	13.3	2.57	14.7	11 3/16	5 3/16	94.6	24.0	2.95

— Indicates flat depth or width is too small to establish a workable flat.

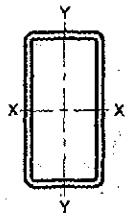

Table 1-11 (continued)
Rectangular HSS
Dimensions and Properties

Shape	Design Wall Thickness, t	Nominal Wt.	Area, A	b/t	h/t	Axis X-X			
						I	S	r	Z
	in.	lb/ft	in.^{2}			in.^{4}	in.^{3}	in.	in.^{3}
HSS12×4×5/8	0.581	59.32	16.4	3.88	17.7	245	40.8	3.87	55.5
×1/2	0.465	48.85	13.5	5.60	22.8	210	34.9	3.95	46.7
×3/8	0.349	37.69	10.4	8.46	31.4	168	28.0	4.02	36.7
×5/16	0.291	31.84	8.76	10.7	38.2	144	24.1	4.06	31.3
×1/4	0.233	25.82	7.10	14.2	48.5	119	19.9	4.10	25.6
×3/16	0.174	19.63	5.37	20.0	66.0	91.8	15.3	4.13	19.6
HSS12×3 1/2×3/8	0.349	36.41	10.0	7.03	31.4	156	26.0	3.94	34.7
×5/16	0.291	30.78	8.46	9.03	38.2	134	22.4	3.98	29.6
HSS12×3×5/16	0.291	29.72	8.17	7.31	38.2	124	20.7	3.90	27.9
×1/4	0.233	24.12	6.63	9.88	48.5	103	17.2	3.94	22.9
×3/16	0.174	18.35	5.02	14.2	66.0	79.6	13.3	3.98	17.5
HSS12×2×5/16	0.291	27.59	7.59	3.87	38.2	104	17.4	3.71	24.5
×1/4	0.233	22.42	6.17	5.58	48.5	86.9	14.5	3.75	20.1
×3/16	0.174	17.08	4.67	8.49	66.0	67.4	11.2	3.80	15.5
HSS10×8×5/8	0.581	67.82	18.7	10.8	14.2	253	50.5	3.68	62.2
×1/2	0.465	55.66	15.3	14.2	18.5	214	42.7	3.73	51.9
×3/8	0.349	42.79	11.8	19.9	25.7	169	33.9	3.79	40.5
×5/16	0.291	36.10	9.92	24.5	31.4	145	29.0	3.82	34.4
×1/4	0.233	29.23	8.03	31.3	39.9	119	23.8	3.85	28.1
×3/16	0.174	22.18	6.06	43.0	54.5	91.4	18.3	3.88	21.4
HSS10×6×5/8	0.581	59.32	16.4	7.33	14.2	201	40.2	3.50	51.3
×1/2	0.465	48.85	13.5	9.90	18.5	171	34.3	3.57	43.0
×3/8	0.349	37.69	10.4	14.2	25.7	137	27.4	3.63	33.8
×5/16	0.291	31.84	8.76	17.6	31.4	118	23.5	3.66	28.8
×1/4	0.233	25.82	7.10	22.8	39.9	96.9	19.4	3.69	23.6
×3/16	0.174	19.63	5.37	31.5	54.5	74.6	14.9	3.73	18.0
HSS10×5×3/8	0.349	35.13	9.67	11.3	25.7	120	24.1	3.53	30.4
×5/16	0.291	29.72	8.17	14.2	31.4	104	20.8	3.56	26.0
×1/4	0.233	24.12	6.63	18.5	39.9	85.8	17.2	3.60	21.3
×3/16	0.174	18.35	5.02	25.7	54.5	66.2	13.2	3.63	16.3

Note: For compactness criteria, refer to Table 1-12A.

Table 1-11 (continued)
Rectangular HSS
Dimensions and Properties

HSS12-HSS10

Shape	Axis Y-Y				Workable Flat		Torsion		Surface Area
	I	S	r	Z	Depth	Width	J	C	
	in.^{4}	in.^{3}	in.	in.^{3}	in.	in.	in.^{4}	in.^{3}	ft^2/ft
HSS12×4×5/8	40.4	20.2	1.57	24.5	9 3/16	—	122	44.6	2.50
×1/2	35.3	17.7	1.62	20.9	9 3/4	—	105	37.5	2.53
×3/8	28.9	14.5	1.67	16.6	10 5/16	2 5/16	84.1	29.5	2.57
×5/16	25.2	12.6	1.70	14.2	10 5/8	2 5/8	72.4	25.2	2.58
×1/4	21.0	10.5	1.72	11.7	10 7/8	2 7/8	59.8	20.6	2.60
×3/16	16.4	8.20	1.75	9.00	11 3/16	3 3/16	46.1	15.7	2.62
HSS12×3 1/2×3/8	21.3	12.2	1.46	14.0	10 5/16	—	64.7	25.5	2.48
×5/16	18.6	10.6	1.48	12.1	10 5/8	—	56.0	21.8	2.50
HSS12×3×5/16	13.1	8.73	1.27	10.0	10 5/8	—	41.3	18.4	2.42
×1/4	11.1	7.38	1.29	8.28	10 7/8	—	34.5	15.1	2.43
×3/16	8.72	5.81	1.32	6.40	11 3/16	2 3/16	26.8	11.6	2.45
HSS12×2×5/16	5.10	5.10	0.820	6.05	10 5/8	—	17.6	11.6	2.25
×1/4	4.41	4.41	0.845	5.08	10 7/8	—	15.1	9.64	2.27
×3/16	3.55	3.55	0.872	3.97	11 3/16	—	12.0	7.49	2.28
HSS10×8×5/8	178	44.5	3.09	53.3	7 3/16	5 3/16	346	80.4	2.83
×1/2	151	37.8	3.14	44.5	7 3/4	5 3/4	288	66.4	2.87
×3/8	120	30.0	3.19	34.8	8 5/16	6 5/16	224	51.4	2.90
×5/16	103	25.7	3.22	29.6	8 5/8	6 5/8	190	43.5	2.92
×1/4	84.7	21.2	3.25	24.2	8 7/8	6 7/8	155	35.3	2.93
×3/16	65.1	16.3	3.28	18.4	9 3/16	7 3/16	118	26.7	2.95
HSS10×6×5/8	89.4	29.8	2.34	35.8	7 3/16	3 3/16	209	58.6	2.50
×1/2	76.8	25.6	2.39	30.1	7 3/4	3 3/4	176	48.7	2.53
×3/8	61.8	20.6	2.44	23.7	8 5/16	4 5/16	139	37.9	2.57
×5/16	53.3	17.8	2.47	20.2	8 5/8	4 5/8	118	32.2	2.58
×1/4	44.1	14.7	2.49	16.6	8 7/8	4 7/8	96.7	26.2	2.60
×3/16	34.1	11.4	2.52	12.7	9 3/16	5 3/16	73.8	19.9	2.62
HSS10×5×3/8	40.6	16.2	2.05	18.7	8 5/16	3 5/16	100	31.2	2.40
×5/16	35.2	14.1	2.07	16.0	8 5/8	3 5/8	86.0	26.5	2.42
×1/4	29.3	11.7	2.10	13.2	8 7/8	3 7/8	70.7	21.6	2.43
×3/16	22.7	9.09	2.13	10.1	9 3/16	4 3/16	54.1	16.5	2.45

— Indicates flat depth or width is too small to establish a workable flat.

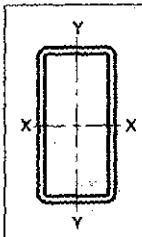

Table 1-11 (continued)
Rectangular HSS
Dimensions and Properties

Shape	Design Wall Thickness, t	Nominal Wt.	Area, A	b/t	h/t	Axis X-X			
						I	S	r	Z
	in.	lb/ft	in.^{2}			in.^{4}	in.^{3}	in.	in.^{3}
HSS10×4×5/8	0.581	50.81	14.0	3.88	14.2	149	29.9	3.26	40.3
×1/2	0.465	42.05	11.6	5.60	18.5	129	25.8	3.34	34.1
×3/8	0.349	32.58	8.97	8.46	25.7	104	20.8	3.41	27.0
×5/16	0.291	27.59	7.59	10.7	31.4	90.1	18.0	3.44	23.1
×1/4	0.233	22.42	6.17	14.2	39.9	74.7	14.9	3.48	19.0
×3/16	0.174	17.08	4.67	20.0	54.5	57.8	11.6	3.52	14.6
×1/8	0.116	11.56	3.16	31.5	83.2	39.8	7.97	3.55	10.0
HSS10×3 1/2×1/2	0.465	40.34	11.1	4.53	18.5	118	23.7	3.26	31.9
×3/8	0.349	31.31	8.62	7.03	25.7	96.1	19.2	3.34	25.3
×5/16	0.291	26.53	7.30	9.03	31.4	83.2	16.6	3.38	21.7
×1/4	0.233	21.57	5.93	12.0	39.9	69.1	13.8	3.41	17.9
×3/16	0.174	16.44	4.50	17.1	54.5	53.6	10.7	3.45	13.7
×1/8	0.116	11.13	3.04	27.2	83.2	37.0	7.40	3.49	9.37
HSS10×3×3/8	0.349	30.03	8.27	5.60	25.7	88.0	17.6	3.26	23.7
×5/16	0.291	25.46	7.01	7.31	31.4	76.3	15.3	3.30	20.3
×1/4	0.233	20.72	5.70	9.88	39.9	63.6	12.7	3.34	16.7
×3/16	0.174	15.80	4.32	14.2	54.5	49.4	9.87	3.38	12.8
×1/8	0.116	10.71	2.93	22.9	83.2	34.2	6.83	3.42	8.80
HSS10×2×3/8	0.349	27.48	7.58	2.73	25.7	71.7	14.3	3.08	20.3
×5/16	0.291	23.34	6.43	3.87	31.4	62.6	12.5	3.12	17.5
×1/4	0.233	19.02	5.24	5.58	39.9	52.5	10.5	3.17	14.4
×3/16	0.174	14.53	3.98	8.49	54.5	41.0	8.19	3.21	11.1
×1/8	0.116	9.86	2.70	14.2	83.2	28.5	5.70	3.25	7.65
HSS9×7×5/8	0.581	59.32	16.4	9.05	12.5	174	38.7	3.26	48.3
×1/2	0.465	48.85	13.5	12.1	16.4	149	33.0	3.32	40.5
×3/8	0.349	37.69	10.4	17.1	22.8	119	26.4	3.38	31.8
×5/16	0.291	31.84	8.76	21.1	27.9	102	22.6	3.41	27.1
×1/4	0.233	25.82	7.10	27.0	35.6	84.1	18.7	3.44	22.2
×3/16	0.174	19.63	5.37	37.2	48.7	64.7	14.4	3.47	16.9

Note: For compactness criteria, refer to Table 1-12A.

Table 1-11 (continued)
Rectangular HSS
Dimensions and Properties

HSS10-HSS9

Shape	Axis Y-Y				Workable Flat		Torsion		Surface Area
	I	*S*	*r*	*Z*	Depth	Width	*J*	*C*	
	in.^{4}	in.^{3}	in.	in.^{3}	in.	in.	in.^{4}	in.^{3}	ft^2/ft
HSS10×4×5/8	33.5	16.8	1.54	20.6	7 3/16	—	95.7	36.7	2.17
×1/2	29.5	14.7	1.59	17.6	7 3/4	—	82.6	31.0	2.20
×3/8	24.3	12.1	1.64	14.0	8 5/16	2 5/16	66.5	24.4	2.23
×5/16	21.2	10.6	1.67	12.1	8 5/8	2 5/8	57.3	20.9	2.25
×1/4	17.7	8.87	1.70	10.0	8 7/8	2 7/8	47.4	17.1	2.27
×3/16	13.9	6.93	1.72	7.66	9 3/16	3 3/16	36.5	13.1	2.28
×1/8	9.65	4.83	1.75	5.26	9 7/16	3 7/16	25.1	8.90	2.30
HSS10×3 1/2×1/2	21.4	12.2	1.39	14.7	7 3/4	—	63.2	26.5	2.12
×3/8	17.8	10.2	1.44	11.8	8 5/16	—	51.5	21.1	2.15
×5/16	15.6	8.92	1.46	10.2	8 5/8	—	44.6	18.0	2.17
×1/4	13.1	7.51	1.49	8.45	8 7/8	—	37.0	14.8	2.18
×3/16	10.3	5.89	1.51	6.52	9 3/16	2 11/16	28.6	11.4	2.20
×1/8	7.22	4.12	1.54	4.48	9 7/16	2 15/16	19.8	7.75	2.22
HSS10×3×5/8	12.4	8.28	1.22	9.73	8 5/16	—	37.8	17.7	2.07
×5/16	11.0	7.30	1.25	8.42	8 5/8	—	33.0	15.2	2.08
×1/4	9.28	6.19	1.28	6.99	8 7/8	—	27.6	12.5	2.10
×3/16	7.33	4.89	1.30	5.41	9 3/16	2 3/16	21.5	9.64	2.12
×1/8	5.16	3.44	1.33	3.74	9 7/16	2 7/16	14.9	6.61	2.13
HSS10×2×3/8	4.70	4.70	0.787	5.76	8 5/16	—	15.9	11.0	1.90
×5/16	4.24	4.24	0.812	5.06	8 5/8	—	14.2	9.56	1.92
×1/4	3.67	3.67	0.838	4.26	8 7/8	—	12.2	7.99	1.93
×3/16	2.97	2.97	0.864	3.34	9 3/16	—	9.74	6.22	1.95
×1/8	2.14	2.14	0.890	2.33	9 7/16	—	6.90	4.31	1.97
HSS9×7×5/8	117	33.5	2.68	40.5	6 3/16	4 3/16	235	62.0	2.50
×1/2	100	28.7	2.73	34.0	6 3/4	4 3/4	197	51.5	2.53
×3/8	80.4	23.0	2.78	26.7	7 5/16	5 5/16	154	40.0	2.57
×5/16	69.2	19.8	2.81	22.8	7 5/8	5 5/8	131	33.9	2.58
×1/4	57.2	16.3	2.84	18.7	7 7/8	5 7/8	107	27.6	2.60
×3/16	44.1	12.6	2.87	14.3	8 3/16	6 3/16	81.7	20.9	2.62

— Indicates flat depth or width is too small to establish a workable flat.

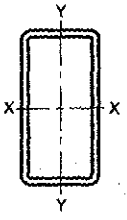

Table 1-11 (continued)
Rectangular HSS
Dimensions and Properties

Shape	Design Wall Thickness, t	Nominal Wt.	Area, A	b/t	h/t	Axis X-X			
						I	S	r	Z
	in.	lb/ft	in.^{2}			in.^{4}	in.^{3}	in.	in.^{3}
HSS9×5×5/8	0.581	50.81	14.0	5.61	12.5	133	29.6	3.08	38.5
×1/2	0.465	42.05	11.6	7.75	16.4	115	25.5	3.14	32.5
×3/8	0.349	32.58	8.97	11.3	22.8	92.5	20.5	3.21	25.7
×5/16	0.291	27.59	7.59	14.2	27.9	79.8	17.7	3.24	22.0
×1/4	0.233	22.42	6.17	18.5	35.6	66.1	14.7	3.27	18.1
×3/16	0.174	17.08	4.67	25.7	48.7	51.1	11.4	3.31	13.8
HSS9×3×1/2	0.465	35.24	9.74	3.45	16.4	80.8	18.0	2.88	24.6
×3/8	0.349	27.48	7.58	5.60	22.8	66.3	14.7	2.96	19.7
×5/16	0.291	23.34	6.43	7.31	27.9	57.7	12.8	3.00	16.9
×1/4	0.233	19.02	5.24	9.88	35.6	48.2	10.7	3.04	14.0
×3/16	0.174	14.53	3.98	14.2	48.7	37.6	8.35	3.07	10.8
HSS8×6×5/8	0.581	50.81	14.0	7.33	10.8	114	28.5	2.85	36.1
×1/2	0.465	42.05	11.6	9.90	14.2	98.2	24.6	2.91	30.5
×3/8	0.349	32.58	8.97	14.2	19.9	79.1	19.8	2.97	24.1
×5/16	0.291	27.59	7.59	17.6	24.5	68.3	17.1	3.00	20.6
×1/4	0.233	22.42	6.17	22.8	31.3	56.6	14.2	3.03	16.9
×3/16	0.174	17.08	4.67	31.5	43.0	43.7	10.9	3.06	13.0
HSS8×4×5/8	0.581	42.30	11.7	3.88	10.8	82.0	20.5	2.64	27.4
×1/2	0.465	35.24	9.74	5.60	14.2	71.8	17.9	2.71	23.5
×3/8	0.349	27.48	7.58	8.46	19.9	58.7	14.7	2.78	18.8
×5/16	0.291	23.34	6.43	10.7	24.5	51.0	12.8	2.82	16.1
×1/4	0.233	19.02	5.24	14.2	31.3	42.5	10.6	2.85	13.3
×3/16	0.174	14.53	3.98	20.0	43.0	33.1	8.27	2.88	10.2
×1/8	0.116	9.86	2.70	31.5	66.0	22.9	5.73	2.92	7.02
HSS8×3×1/2	0.465	31.84	8.81	3.45	14.2	58.6	14.6	2.58	20.0
×3/8	0.349	24.93	6.88	5.60	19.9	48.5	12.1	2.65	16.1
×5/16	0.291	21.21	5.85	7.31	24.5	42.4	10.6	2.69	13.9
×1/4	0.233	17.32	4.77	9.88	31.3	35.5	8.88	2.73	11.5
×3/16	0.174	13.25	3.63	14.2	43.0	27.8	6.94	2.77	8.87
×1/8	0.116	9.01	2.46	22.9	66.0	19.3	4.83	2.80	6.11

Note: For compactness criteria, refer to Table 1-12A.

Table 1-11 (continued)
Rectangular HSS
Dimensions and Properties

HSS9-HSS8

Shape	Axis Y-Y				Workable Flat		Torsion		Surface Area
	I	S	r	Z	Depth	Width	J	C	
	in.^{4}	in.^{3}	in.	in.^{3}	in.	in.	in.^{4}	in.^{3}	ft^2/ft
HSS9×5×5/8	52.0	20.8	1.92	25.3	6 3/16	2 3/16	128	42.5	2.17
×1/2	45.2	18.1	1.97	21.5	6 3/4	2 3/4	109	35.6	2.20
×3/8	36.8	14.7	2.03	17.1	7 5/16	3 5/16	86.9	27.9	2.23
×5/16	32.0	12.8	2.05	14.6	7 5/8	3 5/8	74.4	23.8	2.25
×1/4	26.6	10.6	2.08	12.0	7 7/8	3 7/8	61.2	19.4	2.27
×3/16	20.7	8.28	2.10	9.25	8 3/16	4 3/16	46.9	14.8	2.28
HSS9×3×1/2	13.2	8.81	1.17	10.8	6 3/4	—	40.0	19.7	1.87
×3/8	11.2	7.45	1.21	8.80	7 5/16	—	33.1	15.8	1.90
×5/16	9.88	6.59	1.24	7.63	7 5/8	—	28.9	13.6	1.92
×1/4	8.38	5.59	1.27	6.35	7 7/8	—	24.2	11.3	1.93
×3/16	6.64	4.42	1.29	4.92	8 3/16	2 3/16	18.9	8.66	1.95
HSS8×6×5/8	72.3	24.1	2.27	29.5	5 3/16	3 3/16	160	46.0	2.17
×1/2	62.5	20.8	2.32	24.9	5 3/4	3 3/4	127	38.4	2.20
×3/8	50.6	16.9	2.38	19.8	6 5/16	4 5/16	100	30.0	2.23
×5/16	43.8	14.6	2.40	16.9	6 5/8	4 5/8	85.8	25.5	2.25
×1/4	36.4	12.1	2.43	13.9	6 7/8	4 7/8	70.3	20.8	2.27
×3/16	28.2	9.39	2.46	10.7	7 3/16	5 3/16	53.7	15.8	2.28
HSS8×4×5/8	26.6	13.3	1.51	16.6	5 3/16	—	70.3	28.7	1.83
×1/2	23.6	11.8	1.56	14.3	5 3/4	—	61.1	24.4	1.87
×3/8	19.6	9.80	1.61	11.5	6 5/16	2 5/16	49.3	19.3	1.90
×5/16	17.2	8.58	1.63	9.91	6 5/8	2 5/8	42.6	16.5	1.92
×1/4	14.4	7.21	1.66	8.20	6 7/8	2 7/8	35.3	13.6	1.93
×3/16	11.3	5.65	1.69	6.33	7 3/16	3 3/16	27.2	10.4	1.95
×1/8	7.90	3.95	1.71	4.36	7 7/16	3 7/16	18.7	7.10	1.97
HSS8×3×1/2	11.7	7.81	1.15	9.64	5 3/4	—	34.3	17.4	1.70
×3/8	10.0	6.63	1.20	7.88	6 5/16	—	28.5	14.0	1.73
×5/16	8.81	5.87	1.23	6.84	6 5/8	—	24.9	12.1	1.75
×1/4	7.49	4.99	1.25	5.70	6 7/8	—	20.8	10.0	1.77
×3/16	5.94	3.96	1.28	4.43	7 3/16	2 3/16	16.2	7.68	1.78
×1/8	4.20	2.80	1.31	3.07	7 7/16	2 7/16	11.3	5.27	1.80

— Indicates flat depth or width is too small to establish a workable flat.

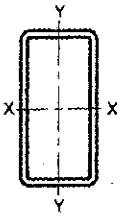

Table 1-11 (continued)
Rectangular HSS
Dimensions and Properties

Shape	Design Wall Thickness, t	Nominal Wt.	Area, A	b/t	h/t	Axis X-X			
						I	S	r	Z
	in.	lb/ft	in.^{2}			in.^{4}	in.^{3}	in.	in.^{3}
HSS8×2×3/8	0.349	22.37	6.18	2.73	19.9	38.2	9.56	2.49	13.4
×5/16	0.291	19.08	5.26	3.87	24.5	33.7	8.43	2.53	11.6
×1/4	0.233	15.62	4.30	5.58	31.3	28.5	7.12	2.57	9.68
×3/16	0.174	11.97	3.28	8.49	43.0	22.4	5.61	2.61	7.51
×1/8	0.116	8.16	2.23	14.2	66.0	15.7	3.93	2.65	5.19
HSS7×5×1/2	0.465	35.24	9.74	7.75	12.1	60.6	17.3	2.50	21.9
×3/8	0.349	27.48	7.58	11.3	17.1	49.5	14.1	2.56	17.5
×5/16	0.291	23.34	6.43	14.2	21.1	43.0	12.3	2.59	15.0
×1/4	0.233	19.02	5.24	18.5	27.0	35.9	10.2	2.62	12.4
×3/16	0.174	14.53	3.98	25.7	37.2	27.9	7.96	2.65	9.52
×1/8	0.116	9.86	2.70	40.1	57.3	19.3	5.52	2.68	6.53
HSS7×4×1/2	0.465	31.84	8.81	5.60	12.1	50.7	14.5	2.40	18.8
×3/8	0.349	24.93	6.88	8.46	17.1	41.8	11.9	2.46	15.1
×5/16	0.291	21.21	5.85	10.7	21.1	36.5	10.4	2.50	13.1
×1/4	0.233	17.32	4.77	14.2	27.0	30.5	8.72	2.53	10.8
×3/16	0.174	13.25	3.63	20.0	37.2	23.8	6.81	2.56	8.33
×1/8	0.116	9.01	2.46	31.5	57.3	16.6	4.73	2.59	5.73
HSS7×3×1/2	0.465	28.43	7.88	3.45	12.1	40.7	11.6	2.27	15.8
×3/8	0.349	22.37	6.18	5.60	17.1	34.1	9.73	2.35	12.8
×5/16	0.291	19.08	5.26	7.31	21.1	29.9	8.54	2.38	11.1
×1/4	0.233	15.62	4.30	9.88	27.0	25.2	7.19	2.42	9.22
×3/16	0.174	11.97	3.28	14.2	37.2	19.8	5.65	2.45	7.14
×1/8	0.116	8.16	2.23	22.9	57.3	13.8	3.95	2.49	4.93
HSS7×2×1/4	0.233	13.91	3.84	5.58	27.0	19.8	5.67	2.27	7.64
×3/16	0.174	10.70	2.93	8.49	37.2	15.7	4.49	2.31	5.95
×1/8	0.116	7.31	2.00	14.2	57.3	11.1	3.16	2.35	4.13
HSS6×5×1/2	0.465	31.84	8.81	7.75	9.90	41.1	13.7	2.16	17.2
×3/8	0.349	24.93	6.88	11.3	14.2	33.9	11.3	2.22	13.8
×5/16	0.291	21.21	5.85	14.2	17.6	29.6	9.85	2.25	11.9
×1/4	0.233	17.32	4.77	18.5	22.8	24.7	8.25	2.28	9.87
×3/16	0.174	13.25	3.63	25.7	31.5	19.3	6.44	2.31	7.62
×1/8	0.116	9.01	2.46	40.1	48.7	13.4	4.48	2.34	5.24

Note: For compactness criteria, refer to Table 1-12A.

Table 1-11 (continued)
Rectangular HSS
Dimensions and Properties

HSS8-HSS6

Shape	Axis Y-Y				Workable Flat		Torsion		Surface Area
	I	*S*	*r*	*Z*	Depth	Width	*J*	*C*	
	in.^{4}	in.^{3}	in.	in.^{3}	in.	in.	in.^{4}	in.^{3}	ft^2/ft
HSS8×2×3/8	3.73	3.73	0.777	4.61	6 5/16	—	12.1	8.65	1.57
×5/16	3.38	3.38	0.802	4.06	6 5/8	—	10.9	7.57	1.58
×1/4	2.94	2.94	0.827	3.43	6 7/8	—	9.36	6.35	1.60
×3/16	2.39	2.39	0.853	2.70	7 3/16	—	7.48	4.95	1.62
×1/8	1.72	1.72	0.879	1.90	7 7/16	—	5.30	3.44	1.63
HSS7×5×1/2	35.6	14.2	1.91	17.3	4 3/4	2 3/4	75.8	27.2	1.87
×3/8	29.3	11.7	1.97	13.8	5 5/16	3 5/16	60.6	21.4	1.90
×5/16	25.5	10.2	1.99	11.9	5 5/8	3 5/8	52.1	18.3	1.92
×1/4	21.3	8.53	2.02	9.83	5 7/8	3 7/8	42.9	15.0	1.93
×3/16	16.6	6.65	2.05	7.57	6 3/16	4 3/16	32.9	11.4	1.95
×1/8	11.6	4.63	2.07	5.20	6 7/16	4 7/16	22.5	7.79	1.97
HSS7×4×1/2	20.7	10.4	1.53	12.6	4 3/4	—	50.5	21.1	1.70
×3/8	17.3	8.63	1.58	10.2	5 5/16	2 5/16	41.0	16.8	1.73
×5/16	15.2	7.58	1.61	8.83	5 5/8	2 5/8	35.4	14.4	1.75
×1/4	12.8	6.38	1.64	7.33	5 7/8	2 7/8	29.3	11.8	1.77
×3/16	10.0	5.02	1.66	5.67	6 1/8	3 1/8	22.7	9.07	1.78
×1/8	7.03	3.51	1.69	3.91	6 7/16	3 7/16	15.6	6.20	1.80
HSS7×3×1/2	10.2	6.80	1.14	8.46	4 3/4	—	28.6	15.0	1.53
×3/8	8.71	5.81	1.19	6.95	5 5/16	—	23.9	12.1	1.57
×5/16	7.74	5.16	1.21	6.05	5 5/8	—	20.9	10.5	1.58
×1/4	6.60	4.40	1.24	5.06	5 7/8	—	17.5	8.68	1.60
×3/16	5.24	3.50	1.26	3.94	6 3/16	2 3/16	13.7	6.69	1.62
×1/8	3.71	2.48	1.29	2.73	6 7/16	2 7/16	9.48	4.60	1.63
HSS7×2×1/4	2.58	2.58	0.819	3.02	5 7/8	—	7.95	5.52	1.43
×3/16	2.10	2.10	0.845	2.39	6 3/16	—	6.35	4.32	1.45
×1/8	1.52	1.52	0.871	1.68	6 7/16	—	4.51	3.00	1.47
HSS6×5×1/2	30.8	12.3	1.87	15.2	3 3/4	2 3/4	59.8	23.0	1.70
×3/8	25.5	10.2	1.92	12.2	4 5/16	3 5/16	48.1	18.2	1.73
×5/16	22.3	8.91	1.95	10.5	4 5/8	3 5/8	41.4	15.6	1.75
×1/4	18.7	7.47	1.98	8.72	4 7/8	3 7/8	34.2	12.8	1.77
×3/16	14.6	5.84	2.01	6.73	5 3/16	4 3/16	26.3	9.76	1.78
×1/8	10.2	4.07	2.03	4.63	5 7/16	4 7/16	18.0	6.66	1.80

— Indicates flat depth or width is too small to establish a workable flat.

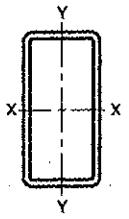

Table 1-11 (continued)
Rectangular HSS
Dimensions and Properties

Shape	Design Wall Thickness, *t*	Nominal Wt.	Area, *A*	*b/t*	*h/t*	Axis X-X			
						I	*S*	*r*	*Z*
	in.	lb/ft	in.^{2}			in.^{4}	in.^{3}	in.	in.^{3}
HSS6×4×1/2	0.465	28.43	7.88	5.60	9.90	34.0	11.3	2.08	14.6
×3/8	0.349	22.37	6.18	8.46	14.2	28.3	9.43	2.14	11.9
×5/16	0.291	19.08	5.26	10.7	17.6	24.8	8.27	2.17	10.3
×1/4	0.233	15.62	4.30	14.2	22.8	20.9	6.96	2.20	8.53
×3/16	0.174	11.97	3.28	20.0	31.5	16.4	5.46	2.23	6.60
×1/8	0.116	8.16	2.23	31.5	48.7	11.4	3.81	2.26	4.56
HSS6×3×1/2	0.465	25.03	6.95	3.45	9.90	26.8	8.95	1.97	12.1
×3/8	0.349	19.82	5.48	5.60	14.2	22.7	7.57	2.04	9.90
×5/16	0.291	16.96	4.68	7.31	17.6	20.1	6.69	2.07	8.61
×1/4	0.233	13.91	3.84	9.88	22.8	17.0	5.66	2.10	7.19
×3/16	0.174	10.70	2.93	14.2	31.5	13.4	4.47	2.14	5.59
×1/8	0.116	7.31	2.00	22.9	48.7	9.43	3.14	2.17	3.87
HSS6×2×3/8	0.349	17.27	4.78	2.73	14.2	17.1	5.71	1.89	7.93
×5/16	0.291	14.83	4.10	3.87	17.6	15.3	5.11	1.93	6.95
×1/4	0.233	12.21	3.37	5.58	22.8	13.1	4.37	1.97	5.84
×3/16	0.174	9.42	2.58	8.49	31.5	10.5	3.49	2.01	4.58
×1/8	0.116	6.46	1.77	14.2	48.7	7.42	2.47	2.05	3.19
HSS5×4×1/2	0.465	25.03	6.95	5.60	7.75	21.2	8.49	1.75	10.9
×3/8	0.349	19.82	5.48	8.46	11.3	17.9	7.17	1.81	8.96
×5/16	0.291	16.96	4.68	10.7	14.2	15.8	6.32	1.84	7.79
×1/4	0.233	13.91	3.84	14.2	18.5	13.4	5.35	1.87	6.49
×3/16	0.174	10.70	2.93	20.0	25.7	10.6	4.22	1.90	5.05
×1/8	0.116	7.31	2.00	31.5	40.1	7.42	2.97	1.93	3.50
HSS5×3×1/2	0.465	21.63	6.02	3.45	7.75	16.4	6.57	1.65	8.83
×3/8	0.349	17.27	4.78	5.60	11.3	14.1	5.65	1.72	7.34
×5/16	0.291	14.83	4.10	7.31	14.2	12.6	5.03	1.75	6.42
×1/4	0.233	12.21	3.37	9.88	18.5	10.7	4.29	1.78	5.38
×3/16	0.174	9.42	2.58	14.2	25.7	8.53	3.41	1.82	4.21
×1/8	0.116	6.46	1.77	22.9	40.1	6.03	2.41	1.85	2.93

Note: For compactness criteria, refer to Table 1-12A.

Table 1-11 (continued)
Rectangular HSS
Dimensions and Properties

HSS6-HSS5

Shape	Axis Y-Y				Workable Flat		Torsion		Surface Area
	I	S	r	Z	Depth	Width	J	C	
	in.^{4}	in.^{3}	in.	in.^{3}	in.	in.	in.^{4}	in.^{3}	ft^2/ft
HSS6×4×1/2	17.8	8.89	1.50	11.0	3 3/4	—	40.3	17.8	1.53
×3/8	14.9	7.47	1.55	8.94	4 5/16	2 5/16	32.8	14.2	1.57
×5/16	13.2	6.58	1.58	7.75	4 5/8	2 5/8	28.4	12.2	1.58
×1/4	11.1	5.56	1.61	6.45	4 7/8	2 7/8	23.6	10.1	1.60
×3/16	8.76	4.38	1.63	5.00	5 5/16	3 3/16	18.2	7.74	1.62
×1/6	6.15	3.08	1.66	3.46	5 7/16	3 7/16	12.6	5.30	1.63
HSS6×3×1/2	8.69	5.79	1.12	7.28	3 3/4	—	23.1	12.7	1.37
×3/8	7.48	4.99	1.17	6.03	4 5/16	—	19.3	10.3	1.40
×5/16	6.67	4.45	1.19	5.27	4 5/8	—	16.9	8.91	1.42
×1/4	5.70	3.80	1.22	4.41	4 7/8	—	14.2	7.39	1.43
×3/16	4.55	3.03	1.25	3.45	5 5/16	2 3/16	11.1	5.71	1.45
×1/8	3.23	2.15	1.27	2.40	5 7/16	2 7/16	7.73	3.93	1.47
HSS6×2×3/8	2.77	2.77	0.760	3.46	4 5/16	—	8.42	6.35	1.23
×5/16	2.52	2.52	0.785	3.07	4 5/8	—	7.60	5.58	1.25
×1/4	2.21	2.21	0.810	2.61	4 7/8	—	6.55	4.70	1.27
×3/16	1.80	1.80	0.836	2.07	5 3/16	—	5.24	3.68	1.28
×1/8	1.31	1.31	0.861	1.46	5 7/16	—	3.72	2.57	1.30
HSS5×4×1/2	14.9	7.43	1.46	9.35	2 3/4	—	30.3	14.5	1.37
×3/8	12.6	6.30	1.52	7.67	3 5/16	2 5/16	24.9	11.7	1.40
×5/16	11.1	5.57	1.54	6.67	3 5/8	2 5/8	21.7	10.1	1.42
×1/4	9.46	4.73	1.57	5.57	3 7/8	2 7/8	18.0	8.32	1.43
×3/16	7.48	3.74	1.60	4.34	4 3/16	3 3/16	14.0	6.41	1.45
×1/8	5.27	2.64	1.62	3.01	4 7/16	3 7/16	9.66	4.39	1.47
HSS5×3×1/2	7.18	4.78	1.09	6.10	2 3/4	—	17.6	10.3	1.20
×3/8	6.25	4.16	1.14	5.10	3 5/16	—	14.9	8.44	1.23
×5/16	5.60	3.73	1.17	4.48	3 5/8	—	13.1	7.33	1.25
×1/4	4.81	3.21	1.19	3.77	3 7/8	—	11.0	6.10	1.27
×3/16	3.85	2.57	1.22	2.96	4 3/16	2 3/16	8.64	4.73	1.28
×1/8	2.75	1.83	1.25	2.07	4 7/16	2 7/16	6.02	3.26	1.30

— Indicates flat depth or width is too small to establish a workable flat.

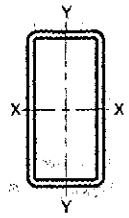

Table 1-11 (continued)
Rectangular HSS
Dimensions and Properties

Shape	Design Wall Thickness, t	Nominal Wt.	Area, A	b/t	h/t	Axis X-X			
						I	S	r	Z
	in.	lb/ft	in.^{2}			in.^{4}	in.^{3}	in.	in.^{3}
HSS5×2½×¼	0.233	11.36	3.14	7.73	18.5	9.40	3.76	1.73	4.83
×3/16	0.174	8.78	2.41	11.4	25.7	7.51	3.01	1.77	3.79
×⅛	0.116	6.03	1.65	18.6	40.1	5.34	2.14	1.80	2.65
HSS5×2×3/8	0.349	14.72	4.09	2.73	11.3	10.4	4.14	1.59	5.71
×5/16	0.291	12.70	3.52	3.87	14.2	9.35	3.74	1.63	5.05
×¼	0.233	10.51	2.91	5.58	18.5	8.08	3.23	1.67	4.27
×3/16	0.174	8.15	2.24	8.49	25.7	6.50	2.60	1.70	3.37
×⅛	0.116	5.61	1.54	14.2	40.1	4.65	1.86	1.74	2.37
HSS4×3×3/8	0.349	14.72	4.09	5.60	8.46	7.93	3.97	1.39	5.12
×5/16	0.291	12.70	3.52	7.31	10.7	7.14	3.57	1.42	4.51
×¼	0.233	10.51	2.91	9.88	14.2	6.15	3.07	1.45	3.81
×3/16	0.174	8.15	2.24	14.2	20.0	4.93	2.47	1.49	3.00
×⅛	0.116	5.61	1.54	22.9	31.5	3.52	1.76	1.52	2.11
HSS4×2½×3/8	0.349	13.44	3.74	4.16	8.46	6.77	3.38	1.35	4.48
×5/16	0.291	11.64	3.23	5.59	10.7	6.13	3.07	1.38	3.97
×¼	0.233	9.66	2.67	7.73	14.2	5.32	2.66	1.41	3.38
×3/16	0.174	7.51	2.06	11.4	20.0	4.30	2.15	1.44	2.67
×⅛	0.116	5.18	1.42	18.6	31.5	3.09	1.54	1.47	1.88
HSS4×2×3/8	0.349	12.17	3.39	2.73	8.46	5.60	2.80	1.29	3.84
×5/16	0.291	10.58	2.94	3.87	10.7	5.13	2.56	1.32	3.43
×¼	0.233	8.81	2.44	5.58	14.2	4.49	2.25	1.36	2.94
×3/16	0.174	6.87	1.89	8.49	20.0	3.66	1.83	1.39	2.34
×⅛	0.116	4.75	1.30	14.2	31.5	2.65	1.32	1.43	1.66
HSS3½×2½×3/8	0.349	12.17	3.39	4.16	7.03	4.75	2.72	1.18	3.59
×5/16	0.291	10.58	2.94	5.59	9.03	4.34	2.48	1.22	3.20
×¼	0.233	8.81	2.44	7.73	12.0	3.79	2.17	1.25	2.74
×3/16	0.174	6.87	1.89	11.4	17.1	3.09	1.76	1.28	2.18
×⅛	0.116	4.75	1.30	18.6	27.2	2.23	1.28	1.31	1.54
HSS3½×2×¼	0.233	7.96	2.21	5.58	12.0	3.17	1.81	1.20	2.36
×3/16	0.174	6.23	1.71	8.49	17.1	2.61	1.49	1.23	1.89
×⅛	0.116	4.33	1.19	14.2	27.2	1.90	1.09	1.27	1.34

Note: For compactness criteria, refer to Table 1-12A.

Table 1-11 (continued)
Rectangular HSS
Dimensions and Properties

HSS5-HSS3½

Shape	Axis Y-Y				Workable Flat		Torsion		Surface Area
	I	*S*	*r*	*Z*	Depth	Width	*J*	*C*	
	in.^{4}	in.^{3}	in.	in.^{3}	in.	in.	in.^{4}	in.^{3}	ft^2/ft
HSS5×2½×¼	3.13	2.50	0.999	2.95	3 7/8	—	7.93	4.99	1.18
×3/16	2.53	2.03	1.02	2.33	4 3/16	—	6.26	3.89	1.20
×1/8	1.82	1.46	1.05	1.64	4 7/16	—	4.40	2.70	1.22
HSS5×2×3/8	2.28	2.28	0.748	2.88	3 5/16	—	6.61	5.20	1.07
×5/16	2.10	2.10	0.772	2.57	3 5/8	—	5.99	4.59	1.08
×1/4	1.84	1.84	0.797	2.20	3 7/8	—	5.17	3.88	1.10
×3/16	1.51	1.51	0.823	1.75	4 3/16	—	4.15	3.05	1.12
×1/8	1.10	1.10	0.848	1.24	4 7/16	—	2.95	2.13	1.13
HSS4×3×3/8	5.01	3.34	1.11	4.18	2 5/16	—	10.6	6.59	1.07
×5/16	4.52	3.02	1.13	3.69	2 5/8	—	9.41	5.75	1.08
×1/4	3.91	2.61	1.16	3.12	2 7/8	—	7.96	4.81	1.10
×3/16	3.16	2.10	1.19	2.46	3 3/16	—	6.26	3.74	1.12
×1/8	2.27	1.51	1.21	1.73	3 7/16	—	4.38	2.59	1.13
HSS4×2½×3/8	3.17	2.54	0.922	3.20	2 5/16	—	7.57	5.32	0.983
×5/16	2.89	2.32	0.947	2.85	2 5/8	—	6.77	4.67	1.00
×1/4	2.53	2.02	0.973	2.43	2 7/8	—	5.78	3.93	1.02
×3/16	2.06	1.65	0.999	1.93	3 1/8	—	4.59	3.08	1.03
×1/8	1.49	1.19	1.03	1.36	3 7/16	—	3.23	2.14	1.05
HSS4×2×3/8	1.80	1.80	0.729	2.31	2 5/16	—	4.83	4.04	0.900
×5/16	1.67	1.67	0.754	2.08	2 5/8	—	4.40	3.59	0.917
×1/4	1.48	1.48	0.779	1.79	2 7/8	—	3.82	3.05	0.933
×3/16	1.22	1.22	0.804	1.43	3 3/16	—	3.08	2.41	0.950
×1/8	0.898	0.898	0.830	1.02	3 7/16	—	2.20	1.69	0.967
HSS3½×2½×3/8	2.77	2.21	0.904	2.82	—	—	6.16	4.57	0.900
×5/16	2.54	2.03	0.930	2.52	2 1/8	—	5.53	4.03	0.917
×1/4	2.23	1.78	0.956	2.16	2 3/8	—	4.75	3.40	0.933
×3/16	1.82	1.46	0.983	1.72	2 11/16	—	3.78	2.67	0.950
×1/8	1.33	1.06	1.01	1.22	2 15/16	—	2.67	1.87	0.967
HSS3½×2×¼	1.30	1.30	0.766	1.58	2 3/8	—	3.16	2.64	0.850
×3/16	1.08	1.08	0.792	1.27	2 11/16	—	2.55	2.09	0.867
×1/8	0.795	0.795	0.818	0.912	2 15/16	—	1.83	1.47	0.883

—Indicates flat depth or width is too small to establish a workable flat.

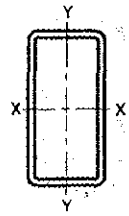

Table 1-11 (continued)
Rectangular HSS
Dimensions and Properties

Shape	Design Wall Thickness, t	Nominal Wt.	Area, A	b/t	h/t	Axis X-X			
						I	S	r	Z
	in.	lb/ft	in.^{2}			in.^{4}	in.^{3}	in.	in.^{3}
HSS3½×1½×¼	0.233	7.11	1.97	3.44	12.0	2.55	1.46	1.14	1.98
×3/16	0.174	5.59	1.54	5.62	17.1	2.12	1.21	1.17	1.60
×⅛	0.116	3.90	1.07	9.93	27.2	1.57	0.896	1.21	1.15
HSS3×2½×5/16	0.291	9.51	2.64	5.59	7.31	2.92	1.94	1.05	2.51
×¼	0.233	7.96	2.21	7.73	9.88	2.57	1.72	1.08	2.16
×3/16	0.174	6.23	1.71	11.4	14.2	2.11	1.41	1.11	1.73
×⅛	0.116	4.33	1.19	18.6	22.9	1.54	1.03	1.14	1.23
HSS3×2×5/16	0.291	8.45	2.35	3.87	7.31	2.38	1.59	1.01	2.11
×¼	0.233	7.11	1.97	5.58	9.88	2.13	1.42	1.04	1.83
×3/16	0.174	5.59	1.54	8.49	14.2	1.77	1.18	1.07	1.48
×⅛	0.116	3.90	1.07	14.2	22.9	1.30	0.867	1.10	1.06
HSS3×1½×¼	0.233	6.26	1.74	3.44	9.88	1.68	1.12	0.982	1.51
×3/16	0.174	4.96	1.37	5.62	14.2	1.42	0.945	1.02	1.24
×⅛	0.116	3.48	0.956	9.93	22.9	1.06	0.706	1.05	0.895
HSS3×1×3/16	0.174	4.32	1.19	2.75	14.2	1.07	0.713	0.947	0.989
×⅛	0.116	3.05	0.840	5.62	22.9	0.817	0.545	0.987	0.728
HSS2½×2×¼	0.233	6.26	1.74	5.58	7.73	1.33	1.06	0.874	1.37
×3/16	0.174	4.96	1.37	8.49	11.4	1.12	0.894	0.904	1.12
×⅛	0.116	3.48	0.956	14.2	18.6	0.833	0.667	0.934	0.809
HSS2½×1½×¼	0.233	5.41	1.51	3.44	7.73	1.03	0.822	0.826	1.11
×3/16	0.174	4.32	1.19	5.62	11.4	0.882	0.705	0.860	0.915
×⅛	0.116	3.05	0.840	9.93	18.6	0.668	0.535	0.892	0.671
HSS2½×1×3/16	0.174	3.68	1.02	2.75	11.4	0.646	0.517	0.796	0.713
×⅛	0.116	2.63	0.724	5.62	18.6	0.503	0.403	0.834	0.532
HSS2¼×2×3/16	0.174	4.64	1.28	8.49	9.93	0.859	0.764	0.819	0.952
×⅛	0.116	3.27	0.898	14.2	16.4	0.646	0.574	0.848	0.693
HSS2×1½×3/16	0.174	3.68	1.02	5.62	8.49	0.495	0.495	0.697	0.639
×⅛	0.116	2.63	0.724	9.93	14.2	0.383	0.383	0.728	0.475
HSS2×1×3/16	0.174	3.04	0.845	2.75	8.49	0.350	0.350	0.643	0.480
×⅛	0.116	2.20	0.608	5.62	14.2	0.280	0.280	0.679	0.366

Note: For compactness criteria, refer to Table 1-12A.

Table 1-11 (continued)
Rectangular HSS
Dimensions and Properties

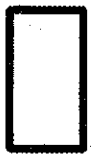

HSS3½-HSS2

Shape	Axis Y-Y				Workable Flat		Torsion		Surface Area
	I	*S*	*r*	*Z*	Depth	Width	*J*	*C*	
	in.^{4}	in.^{3}	in.	in.^{3}	in.	in.	in.^{4}	in.^{3}	ft^2/ft
HSS3½×1½×¼	0.638	0.851	0.569	1.06	2⅜	—	1.79	1.88	0.767
×3/16	0.544	0.725	0.594	0.867	2 11/16	—	1.49	1.51	0.784
×⅛	0.411	0.548	0.619	0.630	2 5/16	—	1.09	1.08	0.800
HSS3×2½×5/16	2.18	1.74	0.908	2.20	—	—	4.34	3.39	0.833
×¼	1.93	1.54	0.935	1.90	—	—	3.74	2.87	0.850
×3/16	1.59	1.27	0.963	1.52	2 3/16	—	3.00	2.27	0.867
×⅛	1.16	0.931	0.990	1.09	2 7/16	—	2.13	1.59	0.883
HSS3×2×5/16	1.24	1.24	0.725	1.58	—	—	2.87	2.60	0.750
×¼	1.11	1.11	0.751	1.38	—	—	2.52	2.23	0.767
×3/16	0.932	0.932	0.778	1.12	2 3/16	—	2.05	1.78	0.784
×⅛	0.692	0.692	0.804	0.803	2 7/16	—	1.47	1.25	0.800
HSS3×1½×¼	0.543	0.725	0.559	0.911	1⅞	—	1.44	1.58	0.683
×3/16	0.467	0.622	0.584	0.752	2 3/16	—	1.21	1.28	0.700
×⅛	0.355	0.474	0.610	0.550	2 7/16	—	0.886	0.920	0.717
HSS3×1×3/16	0.173	0.345	0.380	0.432	2 3/16	—	0.526	0.792	0.617
×⅛	0.138	0.276	0.405	0.325	2 7/16	—	0.408	0.585	0.633
HSS2½×2×¼	0.930	0.930	0.731	1.17	—	—	1.90	1.82	0.683
×3/16	0.786	0.786	0.758	0.956	—	—	1.55	1.46	0.700
×⅛	0.589	0.589	0.785	0.694	—	—	1.12	1.04	0.717
HSS2½×1½×¼	0.449	0.599	0.546	0.764	—	—	1.10	1.29	0.600
×3/16	0.390	0.520	0.572	0.636	—	—	0.929	1.05	0.617
×⅛	0.300	0.399	0.597	0.469	—	—	0.687	0.759	0.633
HSS2½×1×3/16	0.143	0.285	0.374	0.360	—	—	0.412	0.648	0.534
×⅛	0.115	0.230	0.399	0.274	—	—	0.322	0.483	0.550
HSS2¼×2×3/16	0.713	0.713	0.747	0.877	—	—	1.32	1.30	0.659
×⅛	0.538	0.538	0.774	0.639	—	—	0.957	0.927	0.675
HSS2×1½×3/16	0.313	0.417	0.554	0.521	—	—	0.664	0.822	0.534
×⅛	0.244	0.325	0.581	0.389	—	—	0.496	0.599	0.550
HSS2×1×3/16	0.112	0.225	0.365	0.288	—	—	0.301	0.505	0.450
×⅛	0.0922	0.184	0.390	0.223	—	—	0.238	0.380	0.467

— Indicates flat depth or width is too small to establish a workable flat.

HSS16-HSS8

Table 1-12
Square HSS
Dimensions and Properties

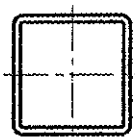

Shape	Design Wall Thickness, t	Nominal Wt.	Area, A	b/t	h/t	I	S	r	Z	Workable Flat	Torsion		Surface Area
											J	C	
	in.	lb/ft	in.^{2}			in.^{4}	in.^{3}	in.	in.^{3}	in.	in.^{4}	in.^{3}	ft^2/ft
HSS16×16×5/8	0.581	127.37	35.0	24.5	24.5	1370	171	6.25	200	13 3/16	2170	276	5.17
×1/2	0.465	103.30	28.3	31.4	31.4	1130	141	6.31	164	13 3/4	1770	224	5.20
×3/8	0.349	78.52	21.5	42.8	42.8	873	109	6.37	126	14 5/16	1350	171	5.23
×5/16	0.291	65.87	18.1	52.0	52.0	739	92.3	6.39	106	14 5/8	1140	144	5.25
HSS14×14×5/8	0.581	110.36	30.3	21.1	21.1	897	128	5.44	151	11 3/16	1430	208	4.50
×1/2	0.465	89.68	24.6	27.1	27.1	743	106	5.49	124	11 3/4	1170	170	4.53
×3/8	0.349	68.31	18.7	37.1	37.1	577	82.5	5.55	95.4	12 5/16	900	130	4.57
×5/16	0.291	57.36	15.7	45.1	45.1	490	69.9	5.58	80.5	12 5/8	759	109	4.58
HSS12×12×5/8	0.581	93.34	25.7	17.7	17.7	548	91.4	4.62	109	9 3/16	885	151	3.83
×1/2	0.465	76.07	20.9	22.8	22.8	457	76.2	4.68	89.6	9 3/4	728	123	3.87
×3/8	0.349	58.10	16.0	31.4	31.4	357	59.5	4.73	69.2	10 5/16	561	94.6	3.90
×5/16	0.291	48.86	13.4	38.2	38.2	304	50.7	4.76	58.6	10 5/8	474	79.7	3.92
×1/4	0.233	39.43	10.8	48.5	48.5	248	41.4	4.79	47.6	10 7/8	384	64.5	3.93
×3/16	0.174	29.84	8.15	66.0	66.0	189	31.5	4.82	36.0	11 3/16	290	48.6	3.95
HSS10×10×5/8	0.581	76.33	21.0	14.2	14.2	304	60.8	3.80	73.2	7 3/16	498	102	3.17
×1/2	0.465	62.46	17.2	18.5	18.5	256	51.2	3.86	60.7	7 3/4	412	84.2	3.20
×3/8	0.349	47.90	13.2	25.7	25.7	202	40.4	3.92	47.2	8 5/16	320	64.8	3.23
×5/16	0.291	40.35	11.1	31.4	31.4	172	34.5	3.94	40.1	8 5/8	271	54.8	3.25
×1/4	0.233	32.63	8.96	39.9	39.9	141	28.3	3.97	32.7	8 7/8	220	44.4	3.27
×3/16	0.174	24.73	6.76	54.5	54.5	108	21.6	4.00	24.8	9 3/16	167	33.6	3.28
HSS9×9×5/8	0.581	67.82	18.7	12.5	12.5	216	47.9	3.40	58.1	6 3/16	356	81.6	2.83
×1/2	0.465	55.66	15.3	16.4	16.4	183	40.6	3.45	48.4	6 3/4	296	67.4	2.87
×3/8	0.349	42.79	11.8	22.8	22.8	145	32.2	3.51	37.8	7 5/16	231	52.1	2.90
×5/16	0.291	36.10	9.92	27.9	27.9	124	27.6	3.54	32.1	7 5/8	196	44.0	2.92
×1/4	0.233	29.23	8.03	35.6	35.6	102	22.7	3.56	26.2	7 7/8	159	35.8	2.93
×3/16	0.174	22.18	6.06	48.7	48.7	78.2	17.4	3.59	20.0	8 3/16	121	27.1	2.95
×1/8	0.116	14.96	4.09	74.6	74.6	53.5	11.9	3.62	13.6	8 7/16	82.0	18.3	2.97
HSS8×8×5/8	0.581	59.32	16.4	10.8	10.8	146	36.5	2.99	44.7	5 3/16	244	63.2	2.50
×1/2	0.465	48.85	13.5	14.2	14.2	125	31.2	3.04	37.5	5 3/4	204	52.4	2.53
×3/8	0.349	37.69	10.4	19.9	19.9	100	24.9	3.10	29.4	6 5/16	160	40.7	2.57
×5/16	0.291	31.84	8.76	24.5	24.5	85.6	21.4	3.13	25.1	6 5/8	136	34.5	2.58
×1/4	0.233	25.82	7.10	31.3	31.3	70.7	17.7	3.15	20.5	6 7/8	111	28.1	2.60
×3/16	0.174	19.63	5.37	43.0	43.0	54.4	13.6	3.18	15.7	7 3/16	84.5	21.3	2.62
×1/8	0.116	13.26	3.62	66.0	66.0	37.4	9.34	3.21	10.7	7 7/16	57.3	14.4	2.63

Note: For compactness criteria, refer to Table 1-12A.

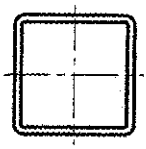

Table 1-12 (continued)
Square HSS
Dimensions and Properties

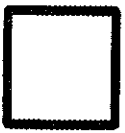

HSS7-HSS4½

Shape	Design Wall Thickness, *t*	Nominal Wt.	Area, *A*	*b/t*	*h/t*	*I*	*S*	*r*	*Z*	Workable Flat	Torsion		Surface Area
											J	*C*	
	in.	lb/ft	in.^{2}			in.^{4}	in.^{3}	in.	in.^{3}	in.	in.^{4}	in.^{3}	ft^2/ft
HSS7×7×5/8	0.581	50.81	14.0	9.05	9.05	93.4	26.7	2.58	33.1	4 3/16	158	47.1	2.17
×1/2	0.465	42.05	11.6	12.1	12.1	80.5	23.0	2.63	27.9	4 3/4	133	39.3	2.20
×3/8	0.349	32.58	8.97	17.1	17.1	65.0	18.6	2.69	22.1	5 5/16	105	30.7	2.23
×5/16	0.291	27.59	7.59	21.1	21.1	56.1	16.0	2.72	18.9	5 5/8	89.7	26.1	2.25
×1/4	0.233	22.42	6.17	27.0	27.0	46.5	13.3	2.75	15.5	5 7/8	73.5	21.3	2.27
×3/16	0.174	17.08	4.67	37.2	37.2	36.0	10.3	2.77	11.9	6 3/16	56.1	16.2	2.28
×1/8	0.116	11.56	3.16	57.3	57.3	24.8	7.09	2.80	8.13	6 7/16	38.2	11.0	2.30
HSS6×6×5/8	0.581	42.30	11.7	7.33	7.33	55.2	18.4	2.17	23.2	3 3/16	94.9	33.4	1.83
×1/2	0.465	35.24	9.74	9.90	9.90	48.3	16.1	2.23	19.8	3 3/4	81.1	28.1	1.87
×3/8	0.349	27.48	7.58	14.2	14.2	39.5	13.2	2.28	15.8	4 5/16	64.6	22.1	1.90
×5/16	0.291	23.34	6.43	17.6	17.6	34.3	11.4	2.31	13.6	4 5/8	55.4	18.9	1.92
×1/4	0.233	19.02	5.24	22.8	22.8	28.6	9.54	2.34	11.2	4 7/8	45.6	15.4	1.93
×3/16	0.174	14.53	3.98	31.5	31.5	22.3	7.42	2.37	8.63	5 3/16	35.0	11.8	1.95
×1/8	0.116	9.86	2.70	48.7	48.7	15.5	5.15	2.39	5.92	5 7/16	23.9	8.03	1.97
HSS5½×5½×3/8	0.349	24.93	6.88	12.8	12.8	29.7	10.8	2.08	13.1	3 13/16	49.0	18.4	1.73
×5/16	0.291	21.21	5.85	15.9	15.9	25.9	9.43	2.11	11.3	4 1/8	42.2	15.7	1.75
×1/4	0.233	17.32	4.77	20.6	20.6	21.7	7.90	2.13	9.32	4 3/8	34.8	12.9	1.77
×3/16	0.174	13.25	3.63	28.6	28.6	17.0	6.17	2.16	7.19	4 11/16	26.7	9.85	1.78
×1/8	0.116	9.01	2.46	44.4	44.4	11.8	4.30	2.19	4.95	4 15/16	18.3	6.72	1.80
HSS5×5×1/2	0.465	28.43	7.88	7.75	7.75	26.0	10.4	1.82	13.1	2 3/4	44.6	18.7	1.53
×3/8	0.349	22.37	6.18	11.3	11.3	21.7	8.68	1.87	10.6	3 5/16	36.1	14.9	1.57
×5/16	0.291	19.08	5.26	14.2	14.2	19.0	7.62	1.90	9.16	3 5/8	31.2	12.8	1.58
×1/4	0.233	15.62	4.30	18.5	18.5	16.0	6.41	1.93	7.61	3 7/8	25.8	10.5	1.60
×3/16	0.174	11.97	3.28	25.7	25.7	12.6	5.03	1.96	5.89	4 3/16	19.9	8.08	1.62
×1/8	0.116	8.16	2.23	40.1	40.1	8.80	3.52	1.99	4.07	4 7/16	13.7	5.53	1.63
HSS4½×4½×1/2	0.465	25.03	6.95	6.68	6.68	18.1	8.03	1.61	10.2	2 1/4	31.3	14.8	1.37
×3/8	0.349	19.82	5.48	9.89	9.89	15.3	6.79	1.67	8.36	2 13/16	25.7	11.9	1.40
×5/16	0.291	16.96	4.68	12.5	12.5	13.5	6.00	1.70	7.27	3 1/8	22.3	10.2	1.42
×1/4	0.233	13.91	3.84	16.3	16.3	11.4	5.08	1.73	6.06	3 3/8	18.5	8.44	1.43
×3/16	0.174	10.70	2.93	22.9	22.9	9.02	4.01	1.75	4.71	3 11/16	14.4	6.49	1.45
×1/8	0.116	7.31	2.00	35.8	35.8	6.35	2.82	1.78	3.27	3 15/16	9.92	4.45	1.47

Note: For compactness criteria, refer to Table 1-12A.

HSS4-HSS2

Table 1-12 (continued)
Square HSS
Dimensions and Properties

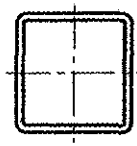

Shape	Design Wall Thickness, t	Nominal Wt.	Area, A	b/t	h/t	I	S	r	Z	Workable Flat	Torsion		Surface Area
											J	C	
	in.	lb/ft	in.^{2}			in.^{4}	in.^{3}	in.	in.^{3}	in.	in.^{4}	in.^{3}	ft^2/ft
HSS4×4×1/2	0.465	21.63	6.02	5.60	5.60	11.9	5.97	1.41	7.70	—	21.0	11.2	1.20
×3/8	0.349	17.27	4.78	8.46	8.46	10.3	5.13	1.47	6.39	2 5/16	17.5	9.14	1.23
×5/16	0.291	14.83	4.10	10.7	10.7	9.14	4.57	1.49	5.59	2 5/8	15.3	7.91	1.25
×1/4	0.233	12.21	3.37	14.2	14.2	7.80	3.90	1.52	4.69	2 7/8	12.8	6.56	1.27
×3/16	0.174	9.42	2.58	20.0	20.0	6.21	3.10	1.55	3.67	3 3/16	10.0	5.07	1.28
×1/8	0.116	6.46	1.77	31.5	31.5	4.40	2.20	1.58	2.56	3 7/16	6.91	3.49	1.30
HSS3 1/2×3 1/2×3/8	0.349	14.72	4.09	7.03	7.03	6.49	3.71	1.26	4.69	—	11.2	6.77	1.07
×5/16	0.291	12.70	3.52	9.03	9.03	5.84	3.34	1.29	4.14	2 1/8	9.89	5.90	1.08
×1/4	0.233	10.51	2.91	12.0	12.0	5.04	2.88	1.32	3.50	2 3/8	8.35	4.92	1.10
×3/16	0.174	8.15	2.24	17.1	17.1	4.05	2.31	1.35	2.76	2 11/16	6.56	3.83	1.12
×1/8	0.116	5.61	1.54	27.2	27.2	2.90	1.66	1.37	1.93	2 15/16	4.58	2.65	1.13
HSS3×3×3/8	0.349	12.17	3.39	5.60	5.60	3.78	2.52	1.06	3.25	—	6.64	4.74	0.900
×5/16	0.291	10.58	2.94	7.31	7.31	3.45	2.30	1.08	2.90	—	5.94	4.18	0.917
×1/4	0.233	8.81	2.44	9.88	9.88	3.02	2.01	1.11	2.48	—	5.08	3.52	0.933
×3/16	0.174	6.87	1.89	14.2	14.2	2.46	1.64	1.14	1.97	2 3/16	4.03	2.76	0.950
×1/8	0.116	4.75	1.30	22.9	22.9	1.78	1.19	1.17	1.40	2 7/16	2.84	1.92	0.967
HSS2 1/2×2 1/2×5/16	0.291	8.45	2.35	5.59	5.59	1.82	1.46	0.880	1.88	—	3.20	2.74	0.750
×1/4	0.233	7.11	1.97	7.73	7.73	1.63	1.30	0.908	1.63	—	2.79	2.35	0.767
×3/16	0.174	5.59	1.54	11.4	11.4	1.35	1.08	0.937	1.32	—	2.25	1.86	0.784
×1/8	0.116	3.90	1.07	18.6	18.6	0.998	0.799	0.965	0.947	—	1.61	1.31	0.800
HSS2 1/4×2 1/4×1/4	0.233	6.26	1.74	6.66	6.66	1.13	1.01	0.806	1.28	—	1.96	1.85	0.683
×3/16	0.174	4.96	1.37	9.93	9.93	0.953	0.847	0.835	1.04	—	1.60	1.48	0.700
×1/8	0.116	3.48	0.956	16.4	16.4	0.712	0.633	0.863	0.755	—	1.15	1.05	0.717
HSS2×2×1/4	0.233	5.41	1.51	5.58	5.58	0.747	0.747	0.704	0.964	—	1.31	1.41	0.600
×3/16	0.174	4.32	1.19	8.49	8.49	0.641	0.641	0.733	0.797	—	1.09	1.14	0.617
×1/8	0.116	3.05	0.840	14.2	14.2	0.486	0.486	0.761	0.584	—	0.796	0.817	0.633

Note: For compactness criteria, refer to Table 1-12A.
— Indicates flat depth or width is too small to establish a workable flat.

Table 1-12A
Rectangular and Square HSS
Compactness Criteria

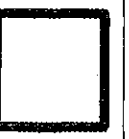

Nominal Wall Thickness, in.	Compactness Criteria for Rectangular and Square HSS			
	Compression	Flexure		Shear
	nonslender up to	compact up to	compact up to	$C_v = 1.0$ up to
	Flange Width, in.	Flange Width, in.	Web Height, in.	Web Height, in.
5/8	20	18	20	20
1/2	16	14	20	20
3/8	12	10	20	20
5/16	10	9	18	18
1/4	8	7	14	14
3/16	6	5	10	10
1/8	4	3 1/2	7	7

Note: Compactness criteria given for $F_y = 46$ ksi.

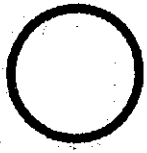

HSS20-HSS10

Table 1-13
Round HSS
Dimensions and Properties

Shape	Design Wall Thickness, t	Nominal Wt.	Area, A	D/t	I	S	r	Z	Torsion	
									J	C
	in.	lb/ft	in.^{2}		in.^{4}	in.^{3}	in.	in.^{3}	in.^{4}	in.^{3}
HSS20×0.500	0.465	104.00	28.5	43.0	1360	136	6.91	177	2720	272
×0.375[f]	0.349	78.67	21.5	57.3	1040	104	6.95	135	2080	208
HSS18×0.500	0.465	93.54	25.6	38.7	985	109	6.20	143	1970	219
×0.375[f]	0.349	70.66	19.4	51.6	754	83.8	6.24	109	1510	168
HSS16×0.625	0.581	103.00	28.1	27.5	838	105	5.46	138	1680	209
×0.500	0.465	82.85	22.7	34.4	685	85.7	5.49	112	1370	171
×0.438	0.407	72.87	19.9	39.3	606	75.8	5.51	99.0	1210	152
×0.375	0.349	62.64	17.2	45.8	526	65.7	5.53	85.5	1050	131
×0.312[f]	0.291	52.32	14.4	55.0	443	55.4	5.55	71.8	886	111
×0.250[f]	0.233	42.09	11.5	68.7	359	44.8	5.58	57.9	717	89.7
HSS14×0.625	0.581	89.36	24.5	24.1	552	78.9	4.75	105	1100	158
×0.500	0.465	72.16	19.8	30.1	453	64.8	4.79	85.2	907	130
×0.375	0.349	54.62	15.0	40.1	349	49.8	4.83	65.1	698	100
×0.312	0.291	45.65	12.5	48.1	295	42.1	4.85	54.7	589	84.2
×0.250[f]	0.233	36.75	10.1	60.1	239	34.1	4.87	44.2	478	68.2
HSS12.750×0.500	0.465	65.48	17.9	27.4	339	53.2	4.35	70.2	678	106
×0.375	0.349	49.61	13.6	36.5	262	41.0	4.39	53.7	523	82.1
×0.250[f]	0.233	33.41	9.16	54.7	180	28.2	4.43	36.5	359	56.3
HSS10.750×0.500	0.465	54.79	15.0	23.1	199	37.0	3.64	49.2	398	74.1
×0.375	0.349	41.59	11.4	30.8	154	28.7	3.68	37.8	309	57.4
×0.250	0.233	28.06	7.70	46.1	106	19.8	3.72	25.8	213	39.6
HSS10×0.625	0.581	62.64	17.2	17.2	191	38.3	3.34	51.6	383	76.6
×0.500	0.465	50.78	13.9	21.5	159	31.7	3.38	42.3	317	63.5
×0.375	0.349	38.58	10.6	28.7	123	24.7	3.41	32.5	247	49.3
×0.312	0.291	32.31	8.88	34.4	105	20.9	3.43	27.4	209	41.9
×0.250	0.233	26.06	7.15	42.9	85.3	17.1	3.45	22.2	171	34.1
×0.188[f]	0.174	19.72	5.37	57.5	64.8	13.0	3.47	16.8	130	25.9

[f] Shape exceeds compact limit for flexure with $F_y = 42$ ksi.

Table 1-13 (continued)
Round HSS
Dimensions and Properties

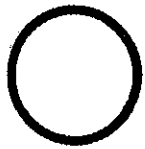

HSS9.625-
HSS6.875

Shape	Design Wall Thickness, t	Nominal Wt.	Area, A	D/t	I	S	r	Z	Torsion	
									J	C
	in.	lb/ft	in.^{2}		in.^{4}	in.^{3}	in.	in.^{3}	in.^{4}	in.^{3}
HSS9.625×0.500	0.465	48.77	13.4	20.7	141	29.2	3.24	39.0	281	58.5
×0.375	0.349	37.08	10.2	27.6	110	22.8	3.28	30.0	219	45.5
×0.312	0.291	31.06	8.53	33.1	93.0	19.3	3.30	25.4	186	38.7
×0.250	0.233	25.06	6.87	41.3	75.9	15.8	3.32	20.6	152	31.5
×0.188[f]	0.174	18.97	5.17	55.3	57.7	12.0	3.34	15.5	115	24.0
HSS8.625×0.625	0.581	53.45	14.7	14.8	119	27.7	2.85	37.7	239	55.4
×0.500	0.465	43.43	11.9	18.5	100	23.1	2.89	31.0	199	46.2
×0.375	0.349	33.07	9.07	24.7	77.8	18.0	2.93	23.9	156	36.1
×0.322	0.300	28.58	7.85	28.8	68.1	15.8	2.95	20.8	136	31.6
×0.250	0.233	22.38	6.14	37.0	54.1	12.5	2.97	16.4	108	25.1
×0.188[f]	0.174	16.96	4.62	49.6	41.3	9.57	2.99	12.4	82.5	19.1
HSS7.625×0.375	0.349	29.06	7.98	21.8	52.9	13.9	2.58	18.5	106	27.8
×0.328	0.305	25.59	7.01	25.0	47.1	12.3	2.59	16.4	94.1	24.7
HSS7.500×0.500	0.465	37.42	10.3	16.1	63.9	17.0	2.49	23.0	128	34.1
×0.375	0.349	28.56	7.84	21.5	50.2	13.4	2.53	17.9	100	26.8
×0.312	0.291	23.97	6.59	25.8	42.9	11.4	2.55	15.1	85.8	22.9
×0.250	0.233	19.38	5.32	32.2	35.2	9.37	2.57	12.3	70.3	18.7
×0.188	0.174	14.70	4.00	43.1	26.9	7.17	2.59	9.34	53.8	14.3
HSS7×0.500	0.465	34.74	9.55	15.1	51.2	14.6	2.32	19.9	102	29.3
×0.375	0.349	26.56	7.29	20.1	40.4	11.6	2.35	15.5	80.9	23.1
×0.312	0.291	22.31	6.13	24.1	34.6	9.88	2.37	13.1	69.1	19.8
×0.250	0.233	18.04	4.95	30.0	28.4	8.11	2.39	10.7	56.8	16.2
×0.188	0.174	13.69	3.73	40.2	21.7	6.21	2.41	8.11	43.5	12.4
×0.125[f]	0.116	9.19	2.51	60.3	14.9	4.25	2.43	5.50	29.7	8.49
HSS6.875×0.500	0.465	34.07	9.36	14.8	48.3	14.1	2.27	19.1	96.7	28.1
×0.375	0.349	26.06	7.16	19.7	38.2	11.1	2.31	14.9	76.4	22.2
×0.312	0.291	21.89	6.02	23.6	32.7	9.51	2.33	12.6	65.4	19.0
×0.250	0.233	17.71	4.86	29.5	26.8	7.81	2.35	10.3	53.7	15.6
×0.188	0.174	13.44	3.66	39.5	20.6	5.99	2.37	7.81	41.1	12.0

[f] Shape exceeds compact limit for flexure with $F_y = 42$ ksi.

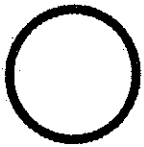

HSS6.625-HSS5

Table 1-13 (continued)
Round HSS
Dimensions and Properties

Shape	Design Wall Thickness, t	Nominal Wt.	Area, A	D/t	I	S	r	Z	Torsion	
									J	C
	in.	lb/ft	in.^{2}		in.^{4}	in.^{3}	in.	in.^{3}	in.^{4}	in.^{3}
HSS6.625×0.500	0.465	32.74	9.00	14.2	42.9	13.0	2.18	17.7	85.9	25.9
×0.432	0.402	28.60	7.86	16.5	38.2	11.5	2.20	15.6	76.4	23.1
×0.375	0.349	25.06	6.88	19.0	34.0	10.3	2.22	13.8	68.0	20.5
×0.312	0.291	21.06	5.79	22.8	29.1	8.79	2.24	11.7	58.2	17.6
×0.280	0.260	18.99	5.20	25.5	26.4	7.96	2.25	10.5	52.7	15.9
×0.250	0.233	17.04	4.68	28.4	23.9	7.22	2.26	9.52	47.9	14.4
×0.188	0.174	12.94	3.53	38.1	18.4	5.54	2.28	7.24	36.7	11.1
×0.125[f]	0.116	8.69	2.37	57.1	12.6	3.79	2.30	4.92	25.1	7.59
HSS6×0.500	0.465	29.40	8.09	12.9	31.2	10.4	1.96	14.3	62.4	20.8
×0.375	0.349	22.55	6.20	17.2	24.8	8.28	2.00	11.2	49.7	16.6
×0.312	0.291	18.97	5.22	20.6	21.3	7.11	2.02	9.49	42.6	14.2
×0.280	0.260	17.12	4.69	23.1	19.3	6.45	2.03	8.57	38.7	12.9
×0.250	0.233	15.37	4.22	25.8	17.6	5.86	2.04	7.75	35.2	11.7
×0.188	0.174	11.68	3.18	34.5	13.5	4.51	2.06	5.91	27.0	9.02
×0.125[f]	0.116	7.85	2.14	51.7	9.28	3.09	2.08	4.02	18.6	6.19
HSS5.563×0.500	0.465	27.06	7.45	12.0	24.4	8.77	1.81	12.1	48.8	17.5
×0.375	0.349	20.80	5.72	15.9	19.5	7.02	1.85	9.50	39.0	14.0
×0.258	0.240	14.63	4.01	23.2	14.2	5.12	1.88	6.80	28.5	10.2
×0.188	0.174	10.80	2.95	32.0	10.7	3.85	1.91	5.05	21.4	7.70
×0.134	0.124	7.78	2.12	44.9	7.84	2.82	1.92	3.67	15.7	5.64
HSS5.500×0.500	0.465	26.73	7.36	11.8	23.5	8.55	1.79	11.8	47.0	17.1
×0.375	0.349	20.55	5.65	15.8	18.8	6.84	1.83	9.27	37.6	13.7
×0.258	0.240	14.46	3.97	22.9	13.7	5.00	1.86	6.64	27.5	10.0
HSS5×0.500	0.465	24.05	6.62	10.8	17.2	6.88	1.61	9.60	34.4	13.8
×0.375	0.349	18.54	5.10	14.3	13.9	5.55	1.65	7.56	27.7	11.1
×0.312	0.291	15.64	4.30	17.2	12.0	4.79	1.67	6.46	24.0	9.58
×0.258	0.240	13.08	3.59	20.8	10.2	4.08	1.69	5.44	20.4	8.15
×0.250	0.233	12.69	3.49	21.5	9.94	3.97	1.69	5.30	19.9	7.95
×0.188	0.174	9.67	2.64	28.7	7.69	3.08	1.71	4.05	15.4	6.15
×0.125	0.116	6.51	1.78	43.1	5.31	2.12	1.73	2.77	10.6	4.25

[f] Shape exceeds compact limit for flexure with $F_y = 42$ ksi.

Table 1-13 (continued)
Round HSS
Dimensions and Properties

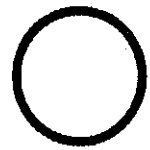

HSS4.500-
HSS2.500

Shape	Design Wall Thickness, t	Nominal Wt.	Area, A	D/t	I	S	r	Z	Torsion	
									J	C
	in.	lb/ft	in.^{2}		in.^{4}	in.^{3}	in.	in.^{3}	in.^{4}	in.^{3}
HSS4.500×0.375	0.349	16.54	4.55	12.9	9.87	4.39	1.47	6.03	19.7	8.78
×0.337	0.313	15.00	4.12	14.4	9.07	4.03	1.48	5.50	18.1	8.06
×0.237	0.220	10.80	2.96	20.5	6.79	3.02	1.52	4.03	13.6	6.04
×0.188	0.174	8.67	2.36	25.9	5.54	2.46	1.53	3.26	11.1	4.93
×0.125	0.116	5.85	1.60	38.8	3.84	1.71	1.55	2.23	7.68	3.41
HSS4×0.313	0.291	12.34	3.39	13.7	5.87	2.93	1.32	4.01	11.7	5.87
×0.250	0.233	10.00	2.76	17.2	4.91	2.45	1.33	3.31	9.82	4.91
×0.237	0.220	9.53	2.61	18.2	4.68	2.34	1.34	3.15	9.36	4.68
×0.226	0.210	9.12	2.50	19.0	4.50	2.25	1.34	3.02	9.01	4.50
×0.220	0.205	8.89	2.44	19.5	4.41	2.21	1.34	2.96	8.83	4.41
×0.188	0.174	7.66	2.09	23.0	3.83	1.92	1.35	2.55	7.67	3.83
×0.125	0.116	5.18	1.42	34.5	2.67	1.34	1.37	1.75	5.34	2.67
HSS3.500×0.313	0.291	10.66	2.93	12.0	3.81	2.18	1.14	3.00	7.61	4.35
×0.300	0.279	10.26	2.82	12.5	3.69	2.11	1.14	2.90	7.38	4.22
×0.250	0.233	8.69	2.39	15.0	3.21	1.83	1.16	2.49	6.41	3.66
×0.216	0.201	7.58	2.08	17.4	2.84	1.63	1.17	2.19	5.69	3.25
×0.203	0.189	7.15	1.97	18.5	2.70	1.54	1.17	2.07	5.41	3.09
×0.188	0.174	6.66	1.82	20.1	2.52	1.44	1.18	1.93	5.04	2.88
×0.125	0.116	4.51	1.23	30.2	1.77	1.01	1.20	1.33	3.53	2.02
HSS3×0.250	0.233	7.35	2.03	12.9	1.95	1.30	0.982	1.79	3.90	2.60
×0.216	0.201	6.43	1.77	14.9	1.74	1.16	0.992	1.58	3.48	2.32
×0.203	0.189	6.07	1.67	15.9	1.66	1.10	0.996	1.50	3.31	2.21
×0.188	0.174	5.65	1.54	17.2	1.55	1.03	1.00	1.39	3.10	2.06
×0.152	0.141	4.63	1.27	21.3	1.30	0.865	1.01	1.15	2.59	1.73
×0.134	0.124	4.11	1.12	24.2	1.16	0.774	1.02	1.03	2.32	1.55
×0.125	0.116	3.84	1.05	25.9	1.09	0.730	1.02	0.965	2.19	1.46
HSS2.875×0.250	0.233	7.02	1.93	12.3	1.70	1.18	0.938	1.63	3.40	2.37
×0.203	0.189	5.80	1.59	15.2	1.45	1.01	0.952	1.37	2.89	2.01
×0.188	0.174	5.40	1.48	16.5	1.35	0.941	0.957	1.27	2.70	1.88
×0.125	0.116	3.67	1.01	24.8	0.958	0.667	0.976	0.884	1.92	1.33
HSS2.500×0.250	0.233	6.01	1.66	10.7	1.08	0.862	0.806	1.20	2.15	1.72
×0.188	0.174	4.65	1.27	14.4	0.865	0.692	0.825	0.943	1.73	1.38
×0.125	0.116	3.17	0.869	21.6	0.619	0.495	0.844	0.660	1.24	0.990

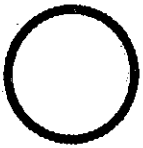

HSS2.375-
HSS1.660

Table 1-13 (continued)
Round HSS
Dimensions and Properties

Shape	Design Wall Thickness, t	Nominal Wt.	Area, A	D/t	I	S	r	Z	Torsion	
									J	C
	in.	lb/ft	in.^{2}		in.^{4}	in.^{3}	in.	in.^{3}	in.^{4}	in.^{3}
HSS2.375×0.250	0.233	5.68	1.57	10.2	0.910	0.766	0.762	1.07	1.82	1.53
×0.218	0.203	5.03	1.39	11.7	0.824	0.694	0.771	0.960	1.65	1.39
×0.188	0.174	4.40	1.20	13.6	0.733	0.617	0.781	0.845	1.47	1.23
×0.154	0.143	3.66	1.00	16.6	0.627	0.528	0.791	0.713	1.25	1.06
×0.125	0.116	3.01	0.823	20.5	0.527	0.443	0.800	0.592	1.05	0.887
HSS1.900×0.188	0.174	3.44	0.943	10.9	0.355	0.374	0.613	0.520	0.710	0.747
×0.145	0.135	2.72	0.749	14.1	0.293	0.309	0.626	0.421	0.586	0.617
×0.120	0.111	2.28	0.624	17.1	0.251	0.264	0.634	0.356	0.501	0.527
HSS1.660×0.140	0.130	2.27	0.625	12.8	0.184	0.222	0.543	0.305	0.368	0.444

Table 1-14
Pipe
Dimensions and Properties

PIPE

Shape	Nominal Wt.	Dimensions		Nominal Wall Thickness	Design Wall Thickness	Area	D/t	I	S	r	J	Z
		Outside Diameter	Inside Diameter									
	lb/ft	in.	in.	in.	in.	in.^{2}		in.^{4}	in.^{3}	in.	in.^{4}	in.^{3}
Standard Weight (Std.)												
Pipe 12 Std.	49.6	12.8	12.0	0.375	0.349	13.7	36.5	262	41.0	4.39	523	53.7
Pipe 10 Std.	40.5	10.8	10.0	0.365	0.340	11.5	31.6	151	28.1	3.68	302	36.9
Pipe 8 Std.	28.6	8.63	7.98	0.322	0.300	7.85	28.8	68.1	15.8	2.95	136	20.8
Pipe 6 Std.	19.0	6.63	6.07	0.280	0.261	5.20	25.4	26.5	7.99	2.25	52.9	10.6
Pipe 5 Std.	14.6	5.56	5.05	0.258	0.241	4.01	23.1	14.3	5.14	1.88	28.6	6.83
Pipe 4 Std.	10.8	4.50	4.03	0.237	0.221	2.96	20.4	6.82	3.03	1.51	13.6	4.05
Pipe 3 1/2 Std.	9.12	4.00	3.55	0.226	0.211	2.50	19.0	4.52	2.26	1.34	9.04	3.03
Pipe 3 Std.	7.58	3.50	3.07	0.216	0.201	2.07	17.4	2.85	1.63	1.17	5.69	2.19
Pipe 2 1/2 Std.	5.80	2.88	2.47	0.203	0.189	1.61	15.2	1.45	1.01	0.952	2.89	1.37
Pipe 2 Std.	3.66	2.38	2.07	0.154	0.143	1.02	16.6	0.627	0.528	0.791	1.25	0.713
Pipe 1 1/2 Std.	2.72	1.90	1.61	0.145	0.135	0.749	14.1	0.293	0.309	0.626	0.586	0.421
Pipe 1 1/4 Std.	2.27	1.66	1.38	0.140	0.130	0.625	12.8	0.184	0.222	0.543	0.368	0.305
Pipe 1 Std.	1.68	1.32	1.05	0.133	0.124	0.469	10.6	0.0830	0.126	0.423	0.166	0.177
Pipe 3/4 Std.	1.13	1.05	0.824	0.113	0.105	0.312	10.0	0.0350	0.0671	0.336	0.0700	0.0942
Pipe 1/2 Std.	0.850	0.840	0.622	0.109	0.101	0.234	8.32	0.0160	0.0388	0.264	0.0320	0.0555
Extra Strong (x-Strong)												
Pipe 12 x-Strong	65.5	12.8	11.8	0.500	0.465	17.5	27.4	339	53.2	4.35	678	70.2
Pipe 10 x-Strong	54.8	10.8	9.75	0.500	0.465	15.1	23.1	199	37.0	3.64	398	49.2
Pipe 8 x-Strong	43.4	8.63	7.63	0.500	0.465	11.9	18.5	100	23.1	2.89	199	31.0
Pipe 6 x-Strong	28.6	6.63	5.76	0.432	0.403	7.83	16.4	38.3	11.6	2.20	76.6	15.6
Pipe 5 x-Strong	20.8	5.56	4.81	0.375	0.349	5.73	15.9	19.5	7.02	1.85	39.0	9.50
Pipe 4 x-Strong	15.0	4.50	3.83	0.337	0.315	4.14	14.3	9.12	4.05	1.48	18.2	5.53
Pipe 3 1/2 x-Strong	12.5	4.00	3.36	0.318	0.296	3.43	13.5	5.94	2.97	1.31	11.9	4.07
Pipe 3 x-Strong	10.3	3.50	2.90	0.300	0.280	2.83	12.5	3.70	2.11	1.14	7.40	2.91
Pipe 2 1/2 x-Strong	7.67	2.88	2.32	0.276	0.257	2.10	11.2	1.83	1.27	0.930	3.66	1.77
Pipe 2 x-Strong	5.03	2.38	1.94	0.218	0.204	1.40	11.7	0.827	0.696	0.771	1.65	0.964
Pipe 1 1/2 x-Strong	3.63	1.90	1.50	0.200	0.186	1.00	10.2	0.372	0.392	0.610	0.744	0.549
Pipe 1 1/4 x-Strong	3.00	1.66	1.28	0.191	0.178	0.837	9.33	0.231	0.278	0.528	0.462	0.393
Pipe 1 x-Strong	2.17	1.32	0.957	0.179	0.166	0.602	7.92	0.101	0.154	0.410	0.202	0.221
Pipe 3/4 x-Strong	1.48	1.05	0.742	0.154	0.143	0.407	7.34	0.0430	0.0818	0.325	0.0860	0.119
Pipe 1/2 x-Strong	1.09	0.840	0.546	0.147	0.137	0.303	6.13	0.0190	0.0462	0.253	0.0380	0.0686
Double-Extra Strong (xx-Strong)												
Pipe 8 xx-Strong	72.5	8.63	6.88	0.875	0.816	20.0	10.6	154	35.8	2.78	308	49.9
Pipe 6 xx-Strong	53.2	6.63	4.90	0.864	0.805	14.7	8.23	63.5	19.2	2.08	127	27.4
Pipe 5 xx-Strong	38.6	5.56	4.06	0.750	0.699	10.7	7.96	32.2	11.6	1.74	64.4	16.7
Pipe 4 xx-Strong	27.6	4.50	3.15	0.674	0.628	7.66	7.17	14.7	6.53	1.39	29.4	9.50
Pipe 3 xx-Strong	18.6	3.50	2.30	0.600	0.559	5.17	6.26	5.79	3.31	1.06	11.6	4.89
Pipe 2 1/2 xx-Strong	13.7	2.88	1.77	0.552	0.514	3.83	5.59	2.78	1.94	0.854	5.56	2.91
Pipe 2 xx-Strong	9.04	2.38	1.50	0.436	0.406	2.51	5.85	1.27	1.07	0.711	2.54	1.60

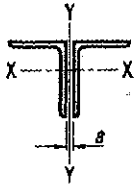

LLBB

Table 1-15
Double Angles
Properties

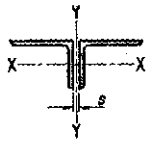

SLBB

Shape	Area	Axis Y-Y Radius of Gyration						LLBB Q_s		LLBB r_x	SLBB Q_s		SLBB r_x
		LLBB Separation, s, in.			SLBB Separation, s, in.			Angles in Contact	Angles Separated		Angles in Contact	Angles Separated	
	in.^{2}	0	3/8	3/4	0	3/8	3/4			in.			in.
2L8×8×1 1/8	33.6	3.41	3.54	3.68	3.41	3.54	3.68	1.00	1.00	2.41	1.00	1.00	2.41
×1	30.2	3.39	3.52	3.66	3.39	3.52	3.66	1.00	1.00	2.43	1.00	1.00	2.43
×7/8	26.6	3.36	3.50	3.63	3.36	3.50	3.63	1.00	1.00	2.45	1.00	1.00	2.45
×3/4	23.0	3.34	3.47	3.61	3.34	3.47	3.61	1.00	1.00	2.46	1.00	1.00	2.46
×5/8	19.4	3.32	3.45	3.58	3.32	3.45	3.58	1.00	0.997	2.48	1.00	0.997	2.48
×9/16	17.5	3.31	3.44	3.57	3.31	3.44	3.57	1.00	0.959	2.49	1.00	0.959	2.49
×1/2	15.7	3.30	3.43	3.56	3.30	3.43	3.56	0.998	0.912	2.49	0.998	0.912	2.49
2L8×6×1	26.2	2.39	2.52	2.66	3.63	3.77	3.91	1.00	1.00	2.49	1.00	1.00	1.72
×7/8	23.0	2.37	2.50	2.63	3.61	3.75	3.89	1.00	1.00	2.50	1.00	1.00	1.74
×3/4	20.0	2.35	2.47	2.61	3.59	3.72	3.86	1.00	1.00	2.52	1.00	1.00	1.75
×5/8	16.8	2.33	2.45	2.59	3.57	3.70	3.84	1.00	0.997	2.54	1.00	0.997	1.77
×9/16	15.2	2.32	2.44	2.58	3.55	3.69	3.83	1.00	0.959	2.55	1.00	0.959	1.78
×1/2	13.6	2.31	2.43	2.56	3.54	3.68	3.81	1.00	0.912	2.55	0.998	0.912	1.79
×7/16	12.0	2.30	2.42	2.55	3.53	3.66	3.80	1.00	0.850	2.56	0.938	0.850	1.80
2L8×4×1	22.2	1.46	1.60	1.75	3.94	4.08	4.23	1.00	1.00	2.51	1.00	1.00	1.03
×7/8	19.6	1.44	1.57	1.72	3.91	4.06	4.21	1.00	1.00	2.53	1.00	1.00	1.04
×3/4	17.0	1.42	1.55	1.69	3.89	4.03	4.18	1.00	1.00	2.55	1.00	1.00	1.05
×5/8	14.3	1.39	1.52	1.66	3.86	4.00	4.15	1.00	0.997	2.56	1.00	0.997	1.06
×9/16	13.0	1.38	1.51	1.65	3.85	3.99	4.13	1.00	0.959	2.57	1.00	0.959	1.07
×1/2	11.6	1.38	1.50	1.63	3.83	3.97	4.12	1.00	0.912	2.58	0.998	0.912	1.08
×7/16	10.2	1.37	1.49	1.62	3.82	3.96	4.10	1.00	0.850	2.59	0.938	0.850	1.09
2L7×4×3/4	15.5	1.48	1.61	1.75	3.34	3.48	3.63	1.00	1.00	2.21	1.00	1.00	1.08
×5/8	13.0	1.45	1.58	1.73	3.31	3.46	3.60	1.00	1.00	2.23	1.00	1.00	1.10
×1/2	10.5	1.44	1.56	1.70	3.29	3.43	3.57	1.00	0.965	2.25	1.00	0.965	1.11
×7/16	9.26	1.43	1.55	1.68	3.28	3.42	3.56	1.00	0.912	2.26	0.998	0.912	1.12
×3/8	8.00	1.42	1.54	1.67	3.26	3.40	3.54	1.00	0.840	2.27	0.928	0.840	1.12
2L6×6×1	22.0	2.58	2.72	2.86	2.58	2.72	2.86	1.00	1.00	1.79	1.00	1.00	1.79
×7/8	19.5	2.56	2.70	2.84	2.56	2.70	2.84	1.00	1.00	1.81	1.00	1.00	1.81
×3/4	16.9	2.54	2.67	2.81	2.54	2.67	2.81	1.00	1.00	1.82	1.00	1.00	1.82
×5/8	14.3	2.52	2.65	2.79	2.52	2.65	2.79	1.00	1.00	1.84	1.00	1.00	1.84
×9/16	12.9	2.51	2.64	2.78	2.51	2.64	2.78	1.00	1.00	1.85	1.00	1.00	1.85
×1/2	11.5	2.50	2.63	2.76	2.50	2.63	2.76	1.00	1.00	1.86	1.00	1.00	1.86
×7/16	10.2	2.49	2.62	2.75	2.49	2.62	2.75	1.00	0.973	1.86	1.00	0.973	1.86
×3/8	8.76	2.48	2.60	2.74	2.48	2.60	2.74	0.998	0.912	1.87	0.998	0.912	1.87
×5/16	7.34	2.47	2.59	2.72	2.47	2.59	2.72	0.914	0.826	1.88	0.914	0.826	1.88

Note: For compactness criteria, refer to Table 1-7B.

Table 1-15 (continued)
Double Angles
Properties

2L8-2L6

Shape	Flexural-Torsional Properties												Single Angle Properties	
	Long Legs Vertical						Short Legs Vertical							
	Back to Back of Angles, in.						Back to Back of Angles, in.						Area, A	r_z
	0		3/8		3/4		0		3/8		3/4			
	$\bar{r}_o$	H	$\bar{r}_o$	H	$\bar{r}_o$	H	$\bar{r}_o$	H	$\bar{r}_o$	H	$\bar{r}_o$	H	in.^{2}	in.
2L8×8×1 1/8	4.56	0.837	4.66	0.844	4.77	0.851	4.56	0.837	4.66	0.844	4.77	0.851	16.8	1.56
×1	4.56	0.834	4.66	0.841	4.77	0.848	4.56	0.834	4.66	0.841	4.77	0.848	15.1	1.56
×7/8	4.56	0.831	4.66	0.838	4.76	0.845	4.56	0.831	4.66	0.838	4.76	0.845	13.3	1.57
×3/4	4.56	0.829	4.66	0.836	4.76	0.843	4.56	0.829	4.66	0.836	4.76	0.843	11.5	1.57
×5/8	4.56	0.826	4.66	0.833	4.76	0.840	4.56	0.826	4.66	0.833	4.76	0.840	9.69	1.58
×9/16	4.56	0.825	4.65	0.832	4.75	0.839	4.56	0.825	4.65	0.832	4.75	0.839	8.77	1.58
×1/2	4.56	0.824	4.65	0.831	4.75	0.837	4.56	0.824	4.65	0.831	4.75	0.837	7.84	1.59
2L8×6×1	4.06	0.721	4.14	0.732	4.23	0.742	4.18	0.924	4.30	0.929	4.43	0.933	13.1	1.28
×7/8	4.07	0.718	4.14	0.728	4.23	0.739	4.17	0.922	4.29	0.926	4.42	0.930	11.5	1.28
×3/4	4.07	0.714	4.15	0.725	4.23	0.735	4.17	0.919	4.28	0.924	4.40	0.928	9.99	1.29
×5/8	4.08	0.712	4.16	0.722	4.24	0.732	4.16	0.917	4.27	0.921	4.39	0.926	8.41	1.29
×9/16	4.09	0.710	4.16	0.720	4.24	0.731	4.15	0.916	4.27	0.920	4.39	0.924	7.61	1.30
×1/2	4.09	0.709	4.16	0.719	4.24	0.729	4.15	0.915	4.26	0.919	4.38	0.923	6.80	1.30
×7/16	4.09	0.708	4.16	0.718	4.24	0.728	4.15	0.913	4.26	0.918	4.38	0.922	5.99	1.31
2L8×4×1	3.86	0.568	3.91	0.580	3.97	0.594	4.11	0.983	4.25	0.984	4.39	0.985	11.1	0.844
×7/8	3.87	0.566	3.92	0.577	3.98	0.590	4.09	0.981	4.22	0.982	4.37	0.984	9.79	0.846
×3/4	3.88	0.564	3.93	0.575	3.99	0.587	4.07	0.980	4.20	0.981	4.35	0.983	8.49	0.850
×5/8	3.89	0.562	3.94	0.573	3.99	0.585	4.05	0.979	4.18	0.980	4.32	0.981	7.16	0.856
×9/16	3.90	0.562	3.94	0.572	4.00	0.584	4.04	0.978	4.17	0.980	4.31	0.981	6.49	0.859
×1/2	3.90	0.561	3.95	0.571	4.00	0.583	4.03	0.978	4.16	0.979	4.30	0.980	5.80	0.863
×7/16	3.91	0.561	3.95	0.571	4.00	0.582	4.02	0.977	4.15	0.978	4.29	0.980	5.11	0.867
2L7×4×3/4	3.41	0.611	3.47	0.624	3.53	0.639	3.57	0.969	3.70	0.971	3.84	0.973	7.74	0.855
×5/8	3.42	0.608	3.47	0.621	3.54	0.635	3.55	0.967	3.68	0.969	3.82	0.971	6.50	0.860
×1/2	3.43	0.606	3.48	0.618	3.55	0.632	3.53	0.965	3.66	0.968	3.80	0.970	5.26	0.866
×7/16	3.43	0.605	3.49	0.617	3.55	0.630	3.53	0.964	3.66	0.967	3.79	0.969	4.63	0.869
×3/8	3.44	0.605	3.49	0.616	3.55	0.629	3.52	0.963	3.65	0.966	3.78	0.968	4.00	0.873
2L6×6×1	3.42	0.843	3.53	0.852	3.64	0.861	3.42	0.843	3.53	0.852	3.64	0.861	11.0	1.17
×7/8	3.42	0.839	3.53	0.848	3.63	0.857	3.42	0.839	3.53	0.848	3.63	0.857	9.75	1.17
×3/4	3.42	0.835	3.52	0.844	3.63	0.853	3.42	0.835	3.52	0.844	3.63	0.853	8.46	1.17
×5/8	3.42	0.831	3.52	0.840	3.62	0.849	3.42	0.831	3.52	0.840	3.62	0.849	7.13	1.17
×9/16	3.42	0.829	3.52	0.838	3.62	0.847	3.42	0.829	3.52	0.838	3.62	0.847	6.45	1.18
×1/2	3.42	0.827	3.52	0.836	3.62	0.846	3.42	0.827	3.52	0.836	3.62	0.846	5.77	1.18
×7/16	3.42	0.826	3.52	0.835	3.62	0.844	3.42	0.826	3.52	0.835	3.62	0.844	5.08	1.18
×3/8	3.42	0.824	3.51	0.833	3.61	0.842	3.42	0.824	3.51	0.833	3.61	0.842	4.38	1.19
×5/16	3.42	0.823	3.51	0.832	3.61	0.841	3.42	0.823	3.51	0.832	3.61	0.841	3.67	1.19

Note: For compactness criteria, refer to Table 1-7B.

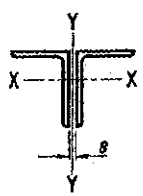

LLBB

Table 1-15 (continued)
Double Angles
Properties

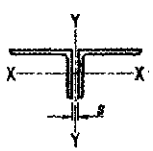

SLBB

Shape	Area	Axis Y-Y Radius of Gyration LLBB Separation, s, in.			Axis Y-Y Radius of Gyration SLBB Separation, s, in.			LLBB Q_s		LLBB r_x	SLBB Q_s		SLBB r_x
								Angles in Contact	Angles Separated		Angles in Contact	Angles Separated	
	in.^{2}	0	3/8	3/4	0	3/8	3/4			in.			in.
2L6×4×7/8	16.0	1.57	1.71	1.86	2.82	2.96	3.11	1.00	1.00	1.86	1.00	1.00	1.10
×3/4	13.9	1.55	1.68	1.83	2.80	2.94	3.08	1.00	1.00	1.88	1.00	1.00	1.12
×5/8	11.7	1.53	1.66	1.80	2.77	2.91	3.06	1.00	1.00	1.89	1.00	1.00	1.13
×9/16	10.6	1.52	1.65	1.79	2.76	2.90	3.04	1.00	1.00	1.90	1.00	1.00	1.14
×1/2	9.50	1.51	1.64	1.77	2.75	2.89	3.03	1.00	1.00	1.91	1.00	1.00	1.14
×7/16	8.36	1.50	1.62	1.76	2.74	2.88	3.02	1.00	0.973	1.92	1.00	0.973	1.15
×3/8	7.22	1.49	1.61	1.75	2.73	2.86	3.00	1.00	0.912	1.93	0.998	0.912	1.16
×5/16	6.06	1.48	1.60	1.74	2.72	2.85	2.99	1.00	0.826	1.94	0.914	0.826	1.17
2L6×3 1/2×1/2	9.00	1.27	1.40	1.54	2.82	2.96	3.11	1.00	1.00	1.92	1.00	1.00	0.968
×3/8	6.88	1.26	1.38	1.52	2.80	2.94	3.08	1.00	0.912	1.93	0.998	0.912	0.984
×5/16	5.78	1.25	1.37	1.50	2.78	2.92	3.06	1.00	0.826	1.94	0.914	0.826	0.991
2L5×5×7/8	16.0	2.16	2.30	2.44	2.16	2.30	2.44	1.00	1.00	1.49	1.00	1.00	1.49
×3/4	14.0	2.13	2.27	2.41	2.13	2.27	2.41	1.00	1.00	1.50	1.00	1.00	1.50
×5/8	11.8	2.11	2.25	2.39	2.11	2.25	2.39	1.00	1.00	1.52	1.00	1.00	1.52
×1/2	9.58	2.09	2.22	2.36	2.09	2.22	2.36	1.00	1.00	1.53	1.00	1.00	1.53
×7/16	8.44	2.08	2.21	2.35	2.08	2.21	2.35	1.00	1.00	1.54	1.00	1.00	1.54
×3/8	7.30	2.07	2.20	2.34	2.07	2.20	2.34	1.00	0.983	1.55	1.00	0.983	1.55
×5/16	6.14	2.06	2.19	2.32	2.06	2.19	2.32	0.998	0.912	1.56	0.998	0.912	1.56
2L5×3 1/2×3/4	11.7	1.39	1.53	1.68	2.33	2.47	2.62	1.00	1.00	1.55	1.00	1.00	0.974
×5/8	9.86	1.37	1.50	1.65	2.30	2.45	2.59	1.00	1.00	1.56	1.00	1.00	0.987
×1/2	8.00	1.35	1.48	1.62	2.28	2.42	2.57	1.00	1.00	1.58	1.00	1.00	1.00
×3/8	6.10	1.33	1.46	1.59	2.26	2.39	2.54	1.00	0.983	1.59	1.00	0.983	1.02
×5/16	5.12	1.32	1.44	1.58	2.25	2.38	2.52	1.00	0.912	1.60	0.998	0.912	1.02
×1/4	4.14	1.31	1.43	1.57	2.23	2.37	2.51	1.00	0.804	1.61	0.894	0.804	1.03
2L5×3×1/2	7.50	1.11	1.24	1.39	2.35	2.50	2.64	1.00	1.00	1.58	1.00	1.00	0.824
×7/16	6.62	1.10	1.23	1.38	2.34	2.48	2.63	1.00	1.00	1.59	1.00	1.00	0.831
×3/8	5.72	1.09	1.22	1.36	2.33	2.47	2.62	1.00	0.983	1.60	1.00	0.983	0.838
×5/16	4.82	1.08	1.21	1.35	2.32	2.46	2.60	1.00	0.912	1.61	0.998	0.912	0.846
×1/4	3.88	1.07	1.19	1.33	2.30	2.44	2.58	1.00	0.804	1.62	0.894	0.804	0.853

Note: For compactness criteria, refer to Table 1-7B.

Table 1-15 (continued)
Double Angles
Properties

2L6-2L5

Shape	Flexural-Torsional Properties												Single Angle Properties	
	Long Legs Vertical						Short Legs Vertical							
	Back to Back of Angles, in.						Back to Back of Angles, in.						Area, A	r_z
	0		3/8		3/4		0		3/8		3/4			
	$\bar{r}_o$	H	$\bar{r}_o$	H	$\bar{r}_o$	H	$\bar{r}_o$	H	$\bar{r}_o$	H	$\bar{r}_o$	H	in.^{2}	in.
2L6×4×7/8	2.96	0.678	3.04	0.694	3.12	0.710	3.10	0.952	3.23	0.956	3.37	0.959	8.00	0.854
×3/4	2.97	0.673	3.04	0.688	3.12	0.705	3.09	0.949	3.22	0.953	3.35	0.957	6.94	0.856
×5/8	2.98	0.669	3.05	0.684	3.13	0.700	3.08	0.946	3.21	0.950	3.34	0.954	5.86	0.859
×9/16	2.98	0.667	3.05	0.682	3.13	0.697	3.07	0.945	3.20	0.949	3.33	0.953	5.31	0.861
×1/2	2.99	0.665	3.05	0.679	3.13	0.695	3.07	0.943	3.19	0.948	3.32	0.952	4.75	0.864
×7/16	2.99	0.663	3.06	0.678	3.13	0.693	3.06	0.942	3.19	0.946	3.31	0.950	4.18	0.867
×3/8	2.99	0.662	3.06	0.676	3.13	0.691	3.06	0.940	3.18	0.945	3.31	0.949	3.61	0.870
×5/16	3.00	0.661	3.06	0.674	3.13	0.689	3.05	0.939	3.17	0.944	3.30	0.948	3.03	0.874
2L6x3 1/2×1/2	2.94	0.615	2.99	0.630	3.06	0.646	3.04	0.964	3.17	0.967	3.31	0.969	4.50	0.756
×3/8	2.95	0.613	3.00	0.627	3.07	0.642	3.02	0.962	3.15	0.965	3.29	0.967	3.44	0.763
×5/16	2.95	0.612	3.00	0.625	3.07	0.641	3.02	0.960	3.14	0.964	3.28	0.966	2.89	0.767
2L5×5×7/8	2.85	0.845	2.96	0.856	3.07	0.866	2.85	0.845	2.96	0.856	3.07	0.866	8.00	0.971
×3/4	2.85	0.840	2.95	0.851	3.06	0.861	2.85	0.840	2.95	0.851	3.06	0.861	6.98	0.972
×5/8	2.85	0.835	2.95	0.846	3.06	0.857	2.85	0.835	2.95	0.846	3.06	0.857	5.90	0.975
×1/2	2.85	0.830	2.94	0.842	3.05	0.852	2.85	0.830	2.94	0.842	3.05	0.852	4.79	0.980
×7/16	2.85	0.828	2.94	0.839	3.05	0.850	2.85	0.828	2.94	0.839	3.05	0.850	4.22	0.983
×3/8	2.84	0.826	2.94	0.838	3.04	0.848	2.84	0.826	2.94	0.838	3.04	0.848	3.65	0.986
×5/16	2.84	0.825	2.94	0.836	3.04	0.847	2.84	0.825	2.94	0.836	3.04	0.847	3.07	0.990
2L5x3 1/2×3/4	2.49	0.699	2.57	0.717	2.66	0.736	2.60	0.943	2.73	0.949	2.86	0.953	5.85	0.744
×5/8	2.49	0.693	2.57	0.711	2.66	0.730	2.59	0.940	2.71	0.945	2.85	0.950	4.93	0.746
×1/2	2.50	0.688	2.58	0.705	2.66	0.724	2.58	0.936	2.70	0.942	2.83	0.947	4.00	0.750
×3/8	2.51	0.683	2.58	0.700	2.66	0.718	2.56	0.933	2.69	0.938	2.81	0.944	3.05	0.755
×5/16	2.51	0.682	2.58	0.698	2.66	0.716	2.56	0.931	2.68	0.937	2.81	0.942	2.56	0.758
×1/4	2.52	0.680	2.58	0.696	2.66	0.714	2.55	0.929	2.67	0.935	2.80	0.941	2.07	0.761
2L5×3×1/2	2.44	0.628	2.51	0.646	2.58	0.667	2.54	0.962	2.68	0.966	2.81	0.969	3.75	0.642
×7/16	2.45	0.626	2.51	0.644	2.58	0.664	2.54	0.961	2.67	0.964	2.80	0.968	3.31	0.644
×3/8	2.45	0.624	2.51	0.642	2.59	0.661	2.53	0.959	2.66	0.963	2.79	0.967	2.86	0.646
×5/16	2.46	0.623	2.52	0.640	2.59	0.659	2.52	0.958	2.65	0.962	2.78	0.965	2.41	0.649
×1/4	2.46	0.622	2.52	0.638	2.59	0.657	2.51	0.957	2.64	0.961	2.77	0.964	1.94	0.652

Note: For compactness criteria, refer to Table 1-7B.

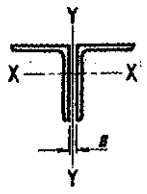

LLBB

Table 1-15 (continued)
Double Angles
Properties

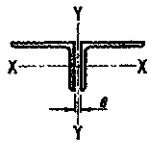

SLBB

Shape	Area	Axis Y-Y Radius of Gyration LLBB Separation, s, in. 0	3/8	3/4	Axis Y-Y Radius of Gyration SLBB Separation, s, in. 0	3/8	3/4	LLBB Q_s Angles in Contact	Angles Separated	LLBB r_x	SLBB Q_s Angles in Contact	Angles Separated	SLBB r_x
	in.²									in.			in.
2L4×4×3/4	10.9	1.73	1.88	2.03	1.73	1.88	2.03	1.00	1.00	1.18	1.00	1.00	1.18
×5/8	9.22	1.71	1.85	2.00	1.71	1.85	2.00	1.00	1.00	1.20	1.00	1.00	1.20
×1/2	7.50	1.69	1.83	1.97	1.69	1.83	1.97	1.00	1.00	1.21	1.00	1.00	1.21
×7/16	6.60	1.68	1.81	1.96	1.68	1.81	1.96	1.00	1.00	1.22	1.00	1.00	1.22
×3/8	5.72	1.67	1.80	1.94	1.67	1.80	1.94	1.00	1.00	1.23	1.00	1.00	1.23
×5/16	4.80	1.66	1.79	1.93	1.66	1.79	1.93	1.00	0.997	1.24	1.00	0.997	1.24
×1/4	3.86	1.65	1.78	1.91	1.65	1.78	1.91	0.998	0.912	1.25	0.998	0.912	1.25
2L4×3 1/2×1/2	7.00	1.44	1.57	1.72	1.75	1.89	2.03	1.00	1.00	1.23	1.00	1.00	1.04
×3/8	5.36	1.42	1.55	1.69	1.73	1.86	2.00	1.00	1.00	1.25	1.00	1.00	1.05
×5/16	4.50	1.40	1.53	1.68	1.72	1.85	1.99	1.00	0.997	1.25	1.00	0.997	1.06
×1/4	3.64	1.39	1.52	1.66	1.70	1.83	1.97	1.00	0.912	1.26	0.998	0.912	1.07
2L4×3×5/8	7.98	1.21	1.35	1.50	1.84	1.98	2.13	1.00	1.00	1.23	1.00	1.00	0.845
×1/2	6.50	1.19	1.32	1.47	1.81	1.95	2.10	1.00	1.00	1.24	1.00	1.00	0.858
×3/8	4.98	1.17	1.30	1.44	1.79	1.93	2.07	1.00	1.00	1.26	1.00	1.00	0.873
×5/16	4.18	1.16	1.29	1.43	1.78	1.91	2.06	1.00	0.997	1.27	1.00	0.997	0.880
×1/4	3.38	1.15	1.27	1.41	1.76	1.90	2.04	1.00	0.912	1.27	0.998	0.912	0.887
2L3 1/2×3 1/2×1/2	6.50	1.49	1.63	1.77	1.49	1.63	1.77	1.00	1.00	1.05	1.00	1.00	1.05
×7/16	5.78	1.48	1.61	1.76	1.48	1.61	1.76	1.00	1.00	1.06	1.00	1.00	1.06
×3/8	5.00	1.47	1.60	1.74	1.47	1.60	1.74	1.00	1.00	1.07	1.00	1.00	1.07
×5/16	4.20	1.46	1.59	1.73	1.46	1.59	1.73	1.00	1.00	1.08	1.00	1.00	1.08
×1/4	3.40	1.44	1.57	1.72	1.44	1.57	1.72	1.00	0.965	1.09	1.00	0.965	1.09
2L3 1/2×3×1/2	6.04	1.23	1.37	1.52	1.55	1.69	1.84	1.00	1.00	1.07	1.00	1.00	0.877
×7/16	5.34	1.22	1.36	1.51	1.54	1.67	1.82	1.00	1.00	1.08	1.00	1.00	0.885
×3/8	4.64	1.21	1.35	1.49	1.52	1.66	1.81	1.00	1.00	1.09	1.00	1.00	0.892
×5/16	3.90	1.20	1.33	1.48	1.51	1.65	1.79	1.00	1.00	1.09	1.00	1.00	0.900
×1/4	3.16	1.19	1.32	1.46	1.50	1.63	1.78	1.00	0.965	1.10	1.00	0.965	0.908
2L3 1/2×2 1/2×1/2	5.54	0.992	1.13	1.28	1.62	1.76	1.91	1.00	1.00	1.08	1.00	1.00	0.701
×3/8	4.24	0.970	1.11	1.25	1.59	1.73	1.88	1.00	1.00	1.10	1.00	1.00	0.716
×5/16	3.58	0.960	1.09	1.24	1.58	1.72	1.87	1.00	1.00	1.11	1.00	1.00	0.723
×1/4	2.90	0.950	1.08	1.22	1.57	1.70	1.85	1.00	0.965	1.12	1.00	0.965	0.731

Note: For compactness criteria, refer to Table 1-7B.

Table 1-15 (continued)
Double Angles
Properties

2L4-2L3½

Shape	Flexural-Torsional Properties												Single Angle Properties	
	Long Legs Vertical						Short Legs Vertical							
	Back to Back of Angles, in.						Back to Back of Angles, in.						Area, A	r_z
	0		3/8		3/4		0		3/8		3/4			
	$\bar{r}_o$	H	$\bar{r}_o$	H	$\bar{r}_o$	H	$\bar{r}_o$	H	$\bar{r}_o$	H	$\bar{r}_o$	H	in.²	in.
2L4×4×3/4	2.28	0.847	2.39	0.861	2.51	0.874	2.28	0.847	2.39	0.861	2.51	0.874	5.44	0.774
×5/8	2.28	0.841	2.39	0.854	2.50	0.868	2.28	0.841	2.39	0.854	2.50	0.868	4.61	0.774
×1/2	2.28	0.834	2.38	0.848	2.49	0.862	2.28	0.834	2.38	0.848	2.49	0.862	3.75	0.776
×7/16	2.28	0.832	2.38	0.846	2.49	0.859	2.28	0.832	2.38	0.846	2.49	0.859	3.30	0.777
×3/8	2.28	0.829	2.38	0.843	2.49	0.856	2.28	0.829	2.38	0.843	2.49	0.856	2.86	0.779
×5/16	2.28	0.826	2.37	0.840	2.48	0.854	2.28	0.826	2.37	0.840	2.48	0.854	2.40	0.781
×1/4	2.28	0.824	2.37	0.838	2.48	0.851	2.28	0.824	2.37	0.838	2.48	0.851	1.93	0.783
2L4×3½×½	2.14	0.784	2.23	0.802	2.33	0.819	2.16	0.882	2.28	0.893	2.40	0.904	3.50	0.716
×3/8	2.14	0.778	2.23	0.795	2.33	0.813	2.16	0.876	2.27	0.888	2.39	0.899	2.68	0.719
×5/16	2.14	0.775	2.23	0.792	2.33	0.810	2.16	0.874	2.26	0.885	2.38	0.896	2.25	0.721
×1/4	2.14	0.773	2.22	0.790	2.32	0.807	2.15	0.871	2.26	0.883	2.37	0.894	1.82	0.723
2L4×3×5/8	2.02	0.728	2.11	0.750	2.21	0.773	2.10	0.930	2.22	0.938	2.36	0.945	3.99	0.631
×1/2	2.02	0.721	2.11	0.743	2.20	0.765	2.09	0.925	2.21	0.933	2.34	0.940	3.25	0.633
×3/8	2.03	0.715	2.11	0.736	2.20	0.757	2.08	0.920	2.20	0.928	2.32	0.936	2.49	0.636
×5/16	2.03	0.712	2.11	0.733	2.20	0.754	2.07	0.918	2.19	0.926	2.32	0.934	2.09	0.638
×1/4	2.03	0.710	2.11	0.730	2.20	0.751	2.06	0.915	2.18	0.924	2.31	0.932	1.69	0.639
2L3½×3½×½	1.99	0.838	2.10	0.854	2.21	0.869	1.99	0.838	2.10	0.854	2.21	0.869	3.25	0.679
×7/16	1.99	0.835	2.09	0.851	2.21	0.866	1.99	0.835	2.09	0.851	2.21	0.866	2.89	0.681
×3/8	1.99	0.832	2.09	0.848	2.20	0.863	1.99	0.832	2.09	0.848	2.20	0.863	2.50	0.683
×5/16	1.99	0.829	2.09	0.845	2.20	0.860	1.99	0.829	2.09	0.845	2.20	0.860	2.10	0.685
×1/4	1.99	0.826	2.08	0.842	2.19	0.857	1.99	0.826	2.08	0.842	2.19	0.857	1.70	0.688
2L3½×3×½	1.85	0.780	1.94	0.801	2.05	0.822	1.88	0.892	2.00	0.904	2.13	0.915	3.02	0.618
×7/16	1.85	0.776	1.94	0.797	2.05	0.818	1.88	0.889	1.99	0.901	2.12	0.912	2.67	0.620
×3/8	1.85	0.773	1.94	0.794	2.05	0.814	1.88	0.885	1.99	0.898	2.11	0.910	2.32	0.622
×5/16	1.85	0.770	1.94	0.790	2.04	0.811	1.87	0.883	1.98	0.895	2.11	0.907	1.95	0.624
×1/4	1.85	0.767	1.94	0.787	2.04	0.807	1.87	0.880	1.98	0.893	2.10	0.905	1.58	0.628
2L3½×2½×½	1.75	0.706	1.83	0.732	1.93	0.759	1.82	0.938	1.95	0.946	2.08	0.953	2.77	0.532
×3/8	1.75	0.698	1.83	0.724	1.93	0.750	1.81	0.933	1.93	0.941	2.07	0.949	2.12	0.535
×5/16	1.76	0.695	1.83	0.720	1.92	0.746	1.80	0.930	1.92	0.939	2.06	0.947	1.79	0.538
×1/4	1.76	0.693	1.83	0.717	1.92	0.742	1.80	0.928	1.92	0.937	2.05	0.944	1.45	0.541

Note: For compactness criteria, refer to Table 1-7B.

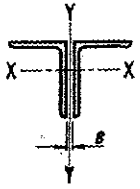

LLBB

Table 1-15 (continued)
Double Angles
Properties

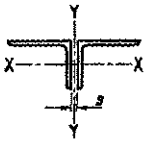

SLBB

Shape	Area	Axis Y-Y Radius of Gyration LLBB Separation, s, in.			Axis Y-Y Radius of Gyration SLBB Separation, s, in.			LLBB Q_a		LLBB r_x	SLBB Q_a		SLBB r_x
								Angles in Contact	Angles Separated		Angles in Contact	Angles Separated	
	in.^{2}	0	3/8	3/4	0	3/8	3/4			in.			in.
2L3×3×1/2	5.52	1.29	1.43	1.58	1.29	1.43	1.58	1.00	1.00	0.895	1.00	1.00	0.895
×7/16	4.86	1.28	1.42	1.57	1.28	1.42	1.57	1.00	1.00	0.903	1.00	1.00	0.903
×3/8	4.22	1.27	1.41	1.55	1.27	1.41	1.55	1.00	1.00	0.910	1.00	1.00	0.910
×5/16	3.56	1.26	1.39	1.54	1.26	1.39	1.54	1.00	1.00	0.918	1.00	1.00	0.918
×1/4	2.88	1.25	1.38	1.52	1.25	1.38	1.52	1.00	1.00	0.926	1.00	1.00	0.926
×3/16	2.18	1.24	1.37	1.51	1.24	1.37	1.51	0.998	0.912	0.933	0.998	0.912	0.933
2L3×2 1/2×1/2	5.00	1.04	1.18	1.33	1.35	1.49	1.64	1.00	1.00	0.910	1.00	1.00	0.718
×7/16	4.44	1.02	1.16	1.32	1.34	1.48	1.63	1.00	1.00	0.917	1.00	1.00	0.724
×3/8	3.86	1.01	1.15	1.30	1.32	1.46	1.61	1.00	1.00	0.924	1.00	1.00	0.731
×5/16	3.26	1.00	1.14	1.29	1.31	1.45	1.60	1.00	1.00	0.932	1.00	1.00	0.739
×1/4	2.64	0.991	1.12	1.27	1.30	1.44	1.58	1.00	1.00	0.940	1.00	1.00	0.746
×3/16	2.00	0.980	1.11	1.25	1.29	1.42	1.57	1.00	0.912	0.947	0.998	0.912	0.753
2L3×2×1/2	4.52	0.795	0.940	1.10	1.42	1.56	1.72	1.00	1.00	0.922	1.00	1.00	0.543
×3/8	3.50	0.771	0.911	1.07	1.39	1.54	1.69	1.00	1.00	0.937	1.00	1.00	0.555
×5/16	2.96	0.760	0.897	1.05	1.38	1.52	1.67	1.00	1.00	0.945	1.00	1.00	0.562
×1/4	2.40	0.749	0.883	1.03	1.37	1.51	1.66	1.00	1.00	0.953	1.00	1.00	0.569
×3/16	1.83	0.739	0.869	1.02	1.35	1.49	1.64	1.00	0.912	0.961	0.998	0.912	0.577
2L2 1/2×2 1/2×1/2	4.52	1.09	1.23	1.39	1.09	1.23	1.39	1.00	1.00	0.735	1.00	1.00	0.735
×3/8	3.46	1.07	1.21	1.36	1.07	1.21	1.36	1.00	1.00	0.749	1.00	1.00	0.749
×5/16	2.92	1.05	1.19	1.34	1.05	1.19	1.34	1.00	1.00	0.756	1.00	1.00	0.756
×1/4	2.38	1.04	1.18	1.33	1.04	1.18	1.33	1.00	1.00	0.764	1.00	1.00	0.764
×3/16	1.80	1.03	1.17	1.31	1.03	1.17	1.31	1.00	0.983	0.771	1.00	0.983	0.771
2L2 1/2×2×3/8	3.10	0.815	0.957	1.11	1.13	1.27	1.42	1.00	1.00	0.766	1.00	1.00	0.574
×5/16	2.64	0.804	0.943	1.10	1.12	1.26	1.41	1.00	1.00	0.774	1.00	1.00	0.581
×1/4	2.14	0.794	0.930	1.08	1.10	1.24	1.39	1.00	1.00	0.782	1.00	1.00	0.589
×3/16	1.64	0.784	0.916	1.07	1.09	1.23	1.38	1.00	0.983	0.790	1.00	0.983	0.597
2L2 1/2×1 1/2×1/4	1.89	0.554	0.694	0.852	1.17	1.32	1.47	1.00	1.00	0.792	1.00	1.00	0.411
×3/16	1.45	0.543	0.679	0.834	1.16	1.30	1.45	1.00	0.983	0.801	1.00	0.983	0.418
2L2×2×3/8	2.74	0.865	1.01	1.17	0.865	1.01	1.17	1.00	1.00	0.591	1.00	1.00	0.591
×5/16	2.32	0.853	0.996	1.15	0.853	0.996	1.15	1.00	1.00	0.598	1.00	1.00	0.598
×1/4	1.89	0.842	0.982	1.14	0.842	0.982	1.14	1.00	1.00	0.605	1.00	1.00	0.605
×3/16	1.44	0.831	0.967	1.12	0.831	0.967	1.12	1.00	1.00	0.612	1.00	1.00	0.612
×1/8	0.982	0.818	0.951	1.10	0.818	0.951	1.10	0.998	0.912	0.620	0.998	0.912	0.620

Note: For compactness criteria, refer to Table 1-7B.

Table 1-15 (continued)
Double Angles
Properties

2L3-2L2

Shape	Flexural-Torsional Properties												Single Angle Properties	
	Long Legs Vertical						Short Legs Vertical							
	Back to Back of Angles, in.						Back to Back of Angles, in.						Area, A	r_z
	0		3/8		3/4		0		3/8		3/4			
	$\bar{r}_o$	H	$\bar{r}_o$	H	$\bar{r}_o$	H	$\bar{r}_o$	H	$\bar{r}_o$	H	$\bar{r}_o$	H	in.^{2}	in.
2L3×3×1/2	1.71	0.842	1.82	0.861	1.94	0.878	1.71	0.842	1.82	0.861	1.94	0.878	2.76	0.580
×7/16	1.71	0.838	1.82	0.857	1.94	0.874	1.71	0.838	1.82	0.857	1.94	0.874	2.43	0.580
×3/8	1.71	0.834	1.81	0.853	1.93	0.870	1.71	0.834	1.81	0.853	1.93	0.870	2.11	0.581
×5/16	1.71	0.830	1.81	0.849	1.93	0.866	1.71	0.830	1.81	0.849	1.93	0.866	1.78	0.583
×1/4	1.71	0.827	1.81	0.845	1.92	0.863	1.71	0.827	1.81	0.845	1.92	0.863	1.44	0.585
×3/16	1.71	0.823	1.80	0.842	1.91	0.859	1.71	0.823	1.80	0.842	1.91	0.859	1.09	0.586
2L3×2 1/2×1/2	1.57	0.774	1.66	0.800	1.78	0.824	1.61	0.905	1.73	0.918	1.86	0.929	2.50	0.516
×7/16	1.57	0.769	1.66	0.795	1.77	0.819	1.60	0.901	1.72	0.914	1.85	0.926	2.22	0.516
×3/8	1.57	0.764	1.66	0.790	1.77	0.815	1.60	0.897	1.72	0.911	1.85	0.923	1.93	0.517
×5/16	1.57	0.760	1.66	0.785	1.76	0.810	1.59	0.893	1.71	0.907	1.84	0.920	1.63	0.518
×1/4	1.57	0.756	1.66	0.781	1.76	0.806	1.59	0.890	1.70	0.904	1.83	0.917	1.32	0.520
×3/16	1.57	0.753	1.65	0.778	1.75	0.802	1.58	0.887	1.70	0.901	1.82	0.914	1.00	0.521
2L3×2×1/2	1.47	0.684	1.55	0.717	1.66	0.751	1.55	0.955	1.69	0.962	1.83	0.968	2.26	0.425
×3/8	1.48	0.675	1.55	0.707	1.65	0.739	1.54	0.949	1.67	0.957	1.81	0.963	1.75	0.426
×5/16	1.48	0.671	1.56	0.702	1.65	0.734	1.53	0.946	1.66	0.954	1.80	0.961	1.48	0.428
×1/4	1.48	0.668	1.56	0.698	1.65	0.730	1.52	0.944	1.65	0.952	1.79	0.959	1.20	0.431
×3/16	1.49	0.666	1.55	0.695	1.64	0.726	1.52	0.941	1.64	0.950	1.78	0.957	0.917	0.435
2L2 1/2×2 1/2×1/2	1.43	0.850	1.54	0.871	1.67	0.890	1.43	0.850	1.54	0.871	1.67	0.890	2.26	0.481
×3/8	1.42	0.839	1.53	0.861	1.65	0.881	1.42	0.839	1.53	0.861	1.65	0.881	1.73	0.481
×5/16	1.42	0.834	1.53	0.856	1.65	0.876	1.42	0.834	1.53	0.856	1.65	0.876	1.46	0.481
×1/4	1.42	0.829	1.52	0.852	1.64	0.872	1.42	0.829	1.52	0.852	1.64	0.872	1.19	0.482
×3/16	1.42	0.825	1.52	0.847	1.63	0.868	1.42	0.825	1.52	0.847	1.63	0.868	0.901	0.482
2L2 1/2×2×3/8	1.29	0.754	1.38	0.786	1.49	0.817	1.32	0.913	1.45	0.927	1.59	0.939	1.55	0.419
×5/16	1.29	0.748	1.38	0.781	1.49	0.812	1.32	0.909	1.44	0.923	1.58	0.936	1.32	0.420
×1/4	1.29	0.744	1.38	0.775	1.49	0.806	1.32	0.904	1.43	0.920	1.57	0.933	1.07	0.423
×3/16	1.29	0.740	1.38	0.771	1.48	0.801	1.31	0.901	1.43	0.916	1.56	0.929	0.818	0.426
2L2 1/2×1 1/2×1/4	1.22	0.630	1.29	0.669	1.38	0.712	1.27	0.962	1.40	0.969	1.55	0.975	0.947	0.321
×3/16	1.22	0.627	1.29	0.665	1.38	0.706	1.26	0.959	1.39	0.967	1.53	0.973	0.724	0.324
2L2×2×3/8	1.14	0.847	1.25	0.874	1.38	0.897	1.14	0.847	1.25	0.874	1.38	0.897	1.37	0.386
×5/16	1.14	0.841	1.25	0.868	1.37	0.891	1.14	0.841	1.25	0.868	1.37	0.891	1.16	0.386
×1/4	1.13	0.835	1.24	0.862	1.37	0.886	1.13	0.835	1.24	0.862	1.37	0.886	0.944	0.387
×3/16	1.13	0.830	1.24	0.857	1.36	0.882	1.13	0.830	1.24	0.857	1.36	0.882	0.722	0.389
×1/8	1.13	0.826	1.23	0.853	1.35	0.877	1.13	0.826	1.23	0.853	1.35	0.877	0.491	0.391

Note: For compactness criteria, refer to Table 1-78.

2C-SHAPES

Table 1-16
2C-Shapes
Properties

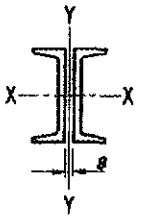

Shape	Area, A	Axis Y-Y, Separation, s, in. = 0				Axis Y-Y, Separation, s, in. = 3/8				Axis Y-Y, Separation, s, in. = 3/4				Axis X-X
		I	S	r	Z	I	S	r	Z	I	S	r	Z	r_x
	in.^{2}	in.^{4}	in.^{3}	in.	in.^{3}	in.^{4}	in.^{3}	in.	in.^{3}	in.^{4}	in.^{3}	in.	in.^{3}	in.
2C15×50	29.4	40.7	11.0	1.18	23.5	50.5	12.9	1.31	29.0	62.4	15.3	1.46	34.5	5.24
×40	23.6	32.6	9.25	1.18	18.4	40.2	10.9	1.31	22.8	49.6	12.7	1.45	27.2	5.43
×33.9	20.0	28.5	8.38	1.20	15.8	35.1	9.78	1.33	19.5	43.1	11.4	1.47	23.3	5.61
2C12×30	17.6	18.2	5.75	1.02	11.9	23.3	6.94	1.15	15.2	29.6	8.36	1.30	18.5	4.29
×25	14.7	15.6	5.11	1.03	9.89	19.8	6.12	1.16	12.6	25.0	7.32	1.31	15.4	4.43
×20.7	12.2	13.6	4.64	1.06	8.49	17.2	5.51	1.19	10.8	21.7	6.55	1.34	13.0	4.61
2C10×30	17.6	15.3	5.04	0.931	11.4	20.2	6.27	1.07	14.7	26.3	7.73	1.22	18.0	3.43
×25	14.7	12.3	4.25	0.914	9.06	16.2	5.27	1.05	11.8	21.1	6.48	1.20	14.6	3.52
×20	11.7	9.91	3.62	0.918	7.11	13.0	4.44	1.05	9.32	16.9	5.43	1.20	11.5	3.67
×15.3	8.96	8.14	3.13	0.953	5.68	10.6	3.80	1.09	7.36	13.7	4.59	1.23	9.04	3.88
2C9×20	11.7	8.80	3.32	0.866	6.84	11.8	4.15	1.00	9.05	15.6	5.15	1.15	11.2	3.22
×15	8.80	6.86	2.76	0.882	5.17	9.10	3.41	1.02	6.82	12.0	4.19	1.17	8.48	3.40
×13.4	7.88	6.34	2.61	0.897	4.74	8.39	3.20	1.03	6.21	11.0	3.92	1.18	7.69	3.48
2C8×18.75	11.0	7.46	2.95	0.823	6.23	10.2	3.75	0.962	8.29	13.7	4.71	1.11	10.4	2.82
×13.75	8.06	5.51	2.35	0.826	4.48	7.47	2.95	0.962	5.99	10.0	3.68	1.11	7.51	2.99
×11.5	6.74	4.82	2.13	0.846	3.86	6.50	2.66	0.982	5.12	8.66	3.29	1.13	6.38	3.11
2C7×14.75	8.66	5.18	2.25	0.773	4.61	7.21	2.90	0.912	6.23	9.85	3.68	1.07	7.85	2.51
×12.25	7.18	4.30	1.96	0.773	3.78	5.97	2.51	0.911	5.13	8.14	3.17	1.06	6.48	2.59
×9.8	5.74	3.59	1.72	0.791	3.11	4.95	2.17	0.929	4.18	6.72	2.73	1.08	5.26	2.72
2C6×13	7.64	4.11	1.91	0.734	3.92	5.85	2.50	0.876	5.35	8.13	3.21	1.03	6.77	2.13
×10.5	6.14	3.26	1.60	0.728	3.08	4.63	2.08	0.867	4.24	6.43	2.67	1.02	5.39	2.22
×8.2	4.78	2.63	1.37	0.741	2.45	3.72	1.76	0.881	3.34	5.14	2.24	1.04	4.24	2.34
2C5×9	5.28	2.45	1.30	0.682	2.52	3.59	1.73	0.824	3.51	5.09	2.25	0.982	4.50	1.84
×6.7	3.94	1.86	1.06	0.688	1.91	2.71	1.40	0.831	2.65	3.84	1.81	0.989	3.83	1.95
2C4×7.25	4.26	1.75	1.02	0.641	1.96	2.63	1.38	0.786	2.75	3.81	1.82	0.946	3.55	1.47
×6.25	3.54	1.36	0.824	0.620	1.54	2.06	1.12	0.763	2.20	3.01	1.49	0.922	2.87	1.50
×5.4	3.16	1.29	0.812	0.637	1.44	1.94	1.10	0.783	2.04	2.82	1.44	0.943	2.63	1.56
×4.5	2.76	1.25	0.789	0.673	1.36	1.86	1.05	0.820	1.88	2.66	1.36	0.981	2.40	1.63
2C3×6	3.52	1.33	0.833	0.614	1.60	2.06	1.15	0.764	2.26	3.03	1.54	0.927	2.92	1.09
×5	2.94	1.05	0.699	0.597	1.29	1.63	0.969	0.746	1.84	2.43	1.30	0.909	2.39	1.12
×4.1	2.40	0.842	0.597	0.591	1.05	1.32	0.827	0.741	1.50	1.97	1.10	0.905	1.95	1.18
×3.5	2.18	0.766	0.558	0.593	0.966	1.20	0.772	0.743	1.37	1.80	1.03	0.908	1.78	1.20

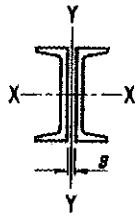

Table 1-17
2MC-Shapes
Properties

2MC18-2MC7

Shape	Area, A	Axis Y-Y, Separation, s, in. = 0				Axis Y-Y, Separation, s, in. = 3/8				Axis Y-Y, Separation, s, in. = 3/4				Axis X-X
		I	S	r	Z	I	S	r	Z	I	S	r	Z	r_x
	in.^{2}	in.^{4}	in.^{3}	in.	in.^{3}	in.^{4}	in.^{3}	in.	in.^{3}	in.^{4}	in.^{3}	in.	in.^{3}	in.
2MC18×58	34.2	60.6	14.4	1.33	29.5	72.8	16.6	1.46	35.9	87.5	19.1	1.60	42.3	6.29
×51.9	30.6	55.0	13.4	1.34	26.3	65.9	15.4	1.47	32.0	79.0	17.6	1.61	37.7	6.41
×45.8	27.0	50.1	12.5	1.36	23.4	59.8	14.3	1.49	28.4	71.4	16.3	1.63	33.5	6.55
×42.7	25.2	47.8	12.1	1.38	22.1	57.0	13.8	1.51	26.8	67.9	15.7	1.64	31.6	6.64
2MC13×50	29.4	60.7	13.8	1.44	28.6	72.5	15.8	1.57	34.1	86.3	18.0	1.71	39.7	4.62
×40	23.4	49.1	11.7	1.45	22.7	58.4	13.4	1.58	27.2	69.4	15.2	1.72	31.6	4.82
×35	20.6	44.3	10.9	1.47	20.2	52.6	12.3	1.60	24.1	62.3	14.0	1.74	27.9	4.95
×31.8	18.7	41.5	10.4	1.49	18.7	49.2	11.7	1.62	22.2	58.2	13.3	1.76	25.7	5.05
2MC12×50	29.4	67.2	16.2	1.51	30.9	79.8	18.5	1.65	36.4	94.5	20.9	1.79	41.9	4.28
×45	26.4	59.9	14.9	1.51	27.5	71.1	16.9	1.64	32.4	84.1	19.2	1.79	37.4	4.36
×40	23.6	53.7	13.8	1.51	24.5	63.7	15.6	1.65	29.0	75.3	17.7	1.79	33.4	4.46
×35	20.6	48.0	12.7	1.53	21.6	56.8	14.4	1.66	25.5	67.1	16.2	1.81	29.4	4.59
×31	18.2	44.0	12.0	1.55	19.7	52.1	13.5	1.69	23.1	61.4	15.2	1.83	26.5	4.71
2MC12×14.3	8.36	3.19	1.50	0.618	3.15	4.66	2.02	0.747	4.72	6.73	2.70	0.897	6.29	4.27
2MC12×10.6[c]	6.20	1.21	0.804	0.441	1.67	2.05	1.21	0.575	2.83	3.33	1.78	0.733	3.99	4.22
2MC10×41.1	24.2	60.0	13.9	1.58	26.4	70.7	15.7	1.71	30.9	83.1	17.7	1.85	35.5	3.61
×33.6	19.7	49.5	12.1	1.58	21.5	58.2	13.6	1.72	25.2	68.3	15.3	1.86	28.9	3.75
×28.5	16.7	43.5	11.0	1.61	18.7	51.1	12.3	1.75	21.9	59.8	13.8	1.89	25.0	3.89
2MC10×25	14.7	27.8	8.18	1.38	14.0	33.6	9.36	1.51	16.8	40.4	10.7	1.66	19.5	3.87
×22	12.9	25.4	7.67	1.40	12.8	30.7	8.76	1.54	15.2	36.8	10.0	1.69	17.6	3.99
2MC10×8.4[c]	4.92	1.05	0.700	0.462	1.40	1.75	1.03	0.596	2.32	2.79	1.49	0.753	3.24	3.61
×6.5[c]	3.90	0.414	0.354	0.326	0.757	0.835	0.615	0.463	1.49	1.53	0.990	0.626	2.22	3.43
2MC9×25.4	14.9	29.2	8.34	1.40	14.5	35.2	9.53	1.53	17.3	42.2	10.9	1.68	20.1	3.43
×23.9	14.0	27.8	8.05	1.41	13.8	33.4	9.19	1.54	16.4	40.1	10.5	1.69	19.0	3.48
2MC8×22.8	13.4	27.7	7.91	1.44	13.5	33.2	9.01	1.58	16.0	39.7	10.2	1.72	18.6	3.09
×21.4	12.6	26.3	7.63	1.45	12.8	31.6	8.68	1.59	15.2	37.7	9.86	1.73	17.5	3.13
2MC8×20	11.7	17.1	5.66	1.21	9.88	21.2	6.61	1.34	12.1	26.2	7.70	1.49	14.3	3.04
×18.7	11.0	16.2	5.45	1.21	9.34	20.1	6.35	1.35	11.4	24.8	7.39	1.50	13.5	3.09
2MC8×8.5	5.00	2.16	1.15	0.658	2.14	3.14	1.52	0.793	3.08	4.47	1.99	0.946	4.02	3.05
2MC7×22.7	13.3	29.0	8.06	1.47	13.9	34.7	9.16	1.61	16.4	41.3	10.4	1.76	18.9	2.67
×19.1	11.2	25.1	7.27	1.50	12.1	30.0	8.25	1.64	14.2	35.7	9.34	1.78	16.3	2.77

[c] Shape is slender for compression with F_y = 36 ksi.

2MC6-2MC3

Table 1-17 (continued)
2MC-Shapes
Properties

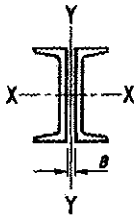

Shape	Area, A	Axis Y-Y												Axis X-X
		Separation, s, in.												
		0				$^3/_8$				$^3/_4$				r_x
		I	S	r	Z	I	S	r	Z	I	S	r	Z	
	in.^{2}	in.^{4}	in.^{3}	in.	in.^{3}	in.^{4}	in.^{3}	in.	in.^{3}	in.^{4}	in.^{3}	in.	in.^{3}	in.
2MC6×18	10.6	25.0	7.13	1.54	11.8	29.8	8.07	1.68	13.8	35.3	9.11	1.83	15.8	2.37
×15.3	8.98	19.7	5.63	1.48	9.43	23.6	6.39	1.62	11.1	28.1	7.24	1.77	12.8	2.38
2MC6×16.3	9.58	15.8	5.26	1.28	8.88	19.4	6.10	1.42	10.7	23.8	7.05	1.58	12.5	2.33
×15.1	8.88	14.8	5.02	1.29	8.35	18.2	5.82	1.43	10.0	22.3	6.71	1.58	11.7	2.37
2MC6×12	7.06	7.21	2.89	1.01	4.97	9.32	3.47	1.15	6.29	11.9	4.15	1.30	7.62	2.30
2MC6×7	4.18	2.25	1.20	0.734	2.09	3.19	1.55	0.873	2.88	4.41	1.96	1.03	3.66	2.34
×6.5	3.90	2.15	1.16	0.744	2.00	3.04	1.49	0.883	2.73	4.20	1.89	1.04	3.46	2.38
2MC4×13.8	8.06	10.1	4.03	1.12	6.84	12.9	4.81	1.27	8.35	16.3	5.68	1.42	9.87	1.48
2MC3×7.1	4.22	3.13	1.62	0.862	2.76	4.31	2.03	1.01	3.55	5.79	2.50	1.17	4.34	1.14

Table 1-18
Weights of Raised-Pattern Floor Plates

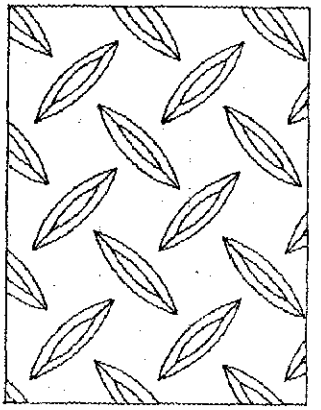

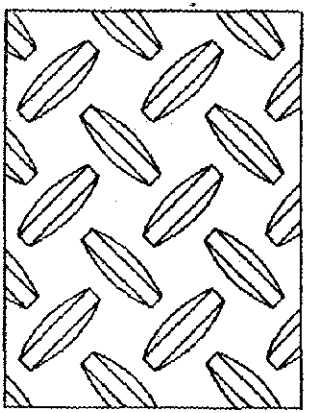

Gauge No.	Wt., lb/ft²	Nominal Thickness, in.	Wt., lb/ft²	Nominal Thickness, in.	Wt., lb/ft²
18	2.40	1/8	6.16	1/2	21.5
16	3.00	3/16	8.71	9/16	24.0
14	3.75	1/4	11.3	5/8	26.6
13	4.50	5/16	13.8	3/4	31.7
12	5.25	3/8	16.4	7/8	36.8
		7/16	18.9	1	41.9

Note: Thickness is measured near the edge of the plate, exclusive of raised pattern.

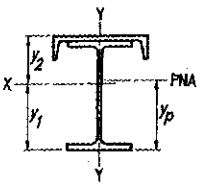

Table 1-19
W-Shapes with Cap Channels
Properties

W-Shape	Channel	Total Wt.	Total Area	Axis X-X			
				I	$S_1 = \frac{I}{y_1}$	$S_2 = \frac{I}{y_2}$	r
		lb/ft	in.^{2}	in.^{4}	in.^{3}	in.^{3}	in.
W36×150	MC18×42.7	193	56.8	12000	553	831	14.6
	C15×33.9	184	54.2	11500	546	764	14.6
W33×141	MC18×42.7	184	54.1	10000	490	750	13.6
	C15×33.9	175	51.5	9580	484	689	13.6
W33×118	MC18×42.7	161	47.2	8280	400	656	13.2
	C15×33.9	152	44.6	7900	395	596	13.3
W30×116	MC18×42.7	159	46.8	6900	365	598	12.1
	C15×33.9	150	44.1	6590	360	544	12.2
W30×99	MC18×42.7	142	41.6	5830	304	533	11.8
	C15×33.9	133	39.0	5550	300	481	11.9
W27×94	C15×33.9	128	37.6	4530	268	435	11.0
W27×84	C15×33.9	118	34.7	4050	237	403	10.8
W24×84	C15×33.9	118	34.7	3340	217	367	9.82
	C12×20.7	105	30.8	3030	211	302	9.92
W24×68	C15×33.9	102	30.0	2710	173	321	9.51
	C12×20.7	88.7	26.1	2440	168	258	9.67
W21×68	C15×33.9	102	30.0	2180	156	287	8.52
	C12×20.7	88.7	26.1	1970	152	232	8.67
W21×62	C15×33.9	95.9	28.2	2000	142	272	8.41
	C12×20.7	82.7	24.3	1800	138	218	8.59
W18×50	C15×33.9	83.9	24.6	1250	100	211	7.12
	C12×20.7	70.7	20.7	1120	97.3	166	7.35
W16×36	C15×33.9	69.9	20.5	748	64.5	160	6.04
	C12×20.7	56.7	16.6	670	62.8	123	6.34
W14×30	C12×20.7	50.7	14.9	447	46.7	98.1	5.47
	C10×15.3	45.3	13.3	420	46.0	84.5	5.61
W12×26	C12×20.7	46.7	13.7	318	36.8	82.1	4.81
	C10×15.3	41.3	12.1	299	36.3	70.5	4.96

Note: Compactness criteria not addressed in this table.

Table 1-19 (continued)
W-Shapes with Cap Channels
Properties

W-Shape	Channel	Axis X-X				Axis Y-Y			
		y_1	y_2	Z	y_p	I	S	r	Z
		in.	in.	in.^{3}	in.	in.^{4}	in.^{3}	in.	in.^{3}
W36×150	MC18×42.7	21.8	14.5	738	28.0	824	91.5	3.81	146
	C15×33.9	21.1	15.1	716	25.9	584	77.9	3.28	122
W33×141	MC18×42.7	20.4	13.3	652	27.0	800	88.9	3.85	142
	C15×33.9	19.8	13.9	635	24.9	561	74.8	3.30	118
W33×118	MC18×42.7	20.7	12.6	544	27.8	741	82.3	3.96	126
	C15×33.9	20.0	13.3	529	25.5	502	66.9	3.35	102
W30×116	MC18×42.7	18.9	11.5	492	26.1	718	79.8	3.92	124
	C15×33.9	18.3	12.1	480	23.8	479	63.8	3.29	100
W30×99	MC18×42.7	19.2	10.9	412	26.4	682	75.8	4.05	114
	C15×33.9	18.5	11.5	408	24.4	442	59.0	3.37	89.4
W27×94	C15×33.9	16.9	10.4	357	23.6	439	58.5	3.41	89.6
W27×84	C15×33.9	17.1	10.0	316	23.9	420	56.0	3.48	83.9
W24×84	C15×33.9	15.4	9.10	286	21.6	409	54.5	3.43	83.4
	C12×20.7	14.3	10.0	275	18.5	223	37.2	2.69	58.2
W24×68	C15×33.9	15.7	8.46	232	21.7	385	51.3	3.58	75.3
	C12×20.7	14.5	9.49	224	19.2	199	33.2	2.76	50.1
W21×68	C15×33.9	13.9	7.59	207	19.3	379	50.6	3.56	75.1
	C12×20.7	12.9	8.49	200	17.6	194	32.3	2.72	50.0
W21×62	C15×33.9	14.1	7.33	189	19.4	372	49.6	3.63	72.5
	C12×20.7	13.0	8.26	183	18.1	186	31.1	2.77	47.3
W18×50	C15×33.9	12.5	5.92	133	16.9	354	47.3	3.79	67.3
	C12×20.7	11.5	6.76	127	16.1	169	28.2	2.85	42.2
W16×36	C15×33.9	11.6	4.67	86.8	15.2	339	45.2	4.06	61.6
	C12×20.7	10.7	5.47	83.2	14.6	153	25.6	3.04	36.4
W14×30	C12×20.7	9.57	4.55	62.0	12.9	149	24.8	3.16	34.6
	C10×15.3	9.11	4.97	60.3	12.6	86.8	17.4	2.55	24.9
W12×26	C12×20.7	8.63	3.87	48.2	11.6	146	24.4	3.27	33.7
	C10×15.3	8.22	4.24	47.0	11.3	84.5	16.9	2.64	24.1

Note: Compactness criteria not addressed in this table.

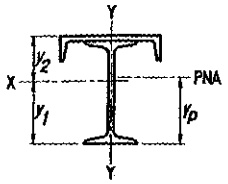

Table 1-20
S-Shapes with Cap Channels
Properties

S-Shape	Channel	Total Wt.	Total Area	Axis X-X			
				I	$S_1 = \frac{I}{y_1}$	$S_2 = \frac{I}{y_2}$	r
		lb/ft	in.^{2}	in.^{4}	in.^{3}	in.^{3}	in.
S24×80	C12×20.7	101	29.5	2750	191	278	9.66
	C10×15.3	95.3	27.9	2610	188	252	9.67
S20×66	C12×20.7	86.7	25.5	1620	132	202	7.97
	C10×15.3	81.3	23.9	1530	129	181	8.00
S15×42.9	C10×15.3	58.2	17.1	615	65.7	105	6.00
	C8×11.5	54.4	16.0	583	64.7	93.9	6.04
S12×31.8	C10×15.3	47.1	13.8	314	40.2	71.2	4.77
	C8×11.5	43.3	12.7	297	39.6	63.0	4.84
S10×25.4	C10×15.3	40.7	11.9	185	27.5	52.7	3.94
	C8×11.5	36.9	10.8	175	27.1	46.3	4.02

Note: Compactness criteria not addressed in this table.

Table 1-20 (continued)
S-Shapes with Cap Channels
Properties

S-Shape	Channel	Axis X-X				Axis Y-Y			
		y_1	y_2	Z	y_p	I	S	r	Z
		in.	in.	in.^{3}	in.	in.^{4}	in.^{3}	in.	in.^{3}
S24×80	C12×20.7	14.4	9.90	256	18.1	171	28.5	2.41	46.4
	C10×15.3	13.9	10.4	246	16.5	109	21.8	1.98	36.8
S20×66	C12×20.7	12.3	7.99	180	16.0	156	26.1	2.48	41.0
	C10×15.3	11.8	8.44	173	14.4	94.7	18.9	1.99	31.3
S15×42.9	C10×15.3	9.37	5.87	87.6	12.8	81.5	16.3	2.18	25.0
	C8×11.5	9.01	6.21	86.5	11.6	46.8	11.7	1.71	18.7
S12×31.8	C10×15.3	7.82	4.42	54.0	10.6	76.5	15.3	2.36	22.3
	C8×11.5	7.50	4.72	52.4	10.3	41.8	10.5	1.82	16.1
S10×25.4	C10×15.3	6.73	3.51	37.2	9.03	73.9	14.8	2.49	20.9
	C8×11.5	6.45	3.77	36.1	8.82	39.2	9.81	1.90	14.6

Note: Compactness criteria not addressed in this table.

Table 1-21
Crane Rails
Dimensions and Properties

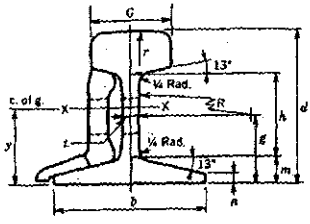

ASCE CRANE RAILS

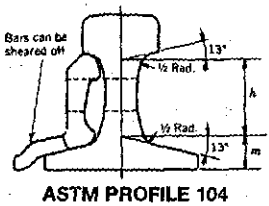

ASTM PROFILE 104

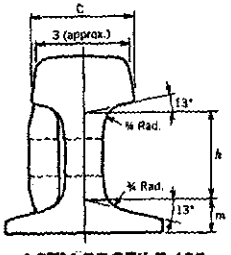

ASTM PROFILE 135

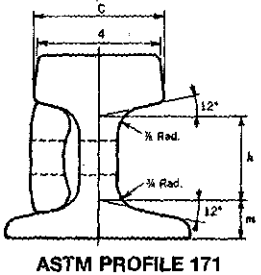

ASTM PROFILE 171

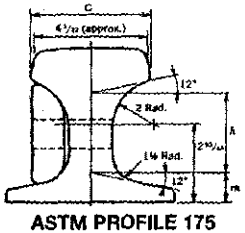

ASTM PROFILE 175

TYPE	Classification	Wt.	Depth, d	Gage, g	Base			Head		Web			Axis X-X				
					b	m	n	c	r	t	h	R	Area	I	S		y
															Head	Base	
		lb/yd	in.	in.	in.	in.	in.	in.	in.	in.	in.	in.	in.^{2}	in.^{4}	in.^{3}	in.^{3}	in.
ASCE	Light	30	3 1/8	1 25/64	3 1/8	17/32	11/64	1 11/16	12	21/64	1 23/32	12	3.00	4.10	2.55	—	—
		40	3 1/2	1 71/128	3 1/2	5/8	7/32	1 7/8	12	25/64	1 55/64	12	3.94	6.54	3.59	3.89	1.68
		50	3 7/8	1 23/32	3 7/8	11/16	1/4	2 1/8	12	7/16	2 1/16	12	4.90	10.1	5.10	—	1.88
		60	4 1/4	1 115/128	4 1/4	49/64	9/32	2 3/8	12	31/64	2 17/64	12	5.93	14.6	6.64	7.12	2.05
	—	70	4 5/8	2 3/64	4 5/8	13/16	9/32	2 7/16	12	33/64	2 15/32	12	6.81	19.7	8.19	8.87	2.22
		80	5	2 3/16	5	7/8	19/64	2 1/2	12	35/64	2 5/8	12	7.86	26.4	10.1	11.1	2.38
	Std.	85	5 3/16	2 17/64	5 3/16	57/64	19/64	2 9/16	12	9/16	2 3/4	12	8.33	30.1	11.1	12.2	2.47
		100	5 3/4	2 65/128	5 3/4	31/32	5/16	2 3/4	12	9/16	2 5/64	12	9.84	44.0	14.6	16.1	2.73
ASTM A759	Crane	104	5	2 7/16	5	1 1/16	1/2	2 1/2	12	1	2 7/16	3 1/2	10.3	29.8	10.7	13.5	2.21
		135	5 3/4	2 15/32	5 3/16	1 1/16	15/32	3 7/16	14	1 1/4	2 13/16	12	13.3	50.8	17.3	18.1	2.81
		171	6	2 5/8	6	1 1/4	5/8	4.3	Flat	1 1/4	2 3/4	Vert.	16.8	73.4	24.5	24.4	3.01
		175	6	2 21/32	6	1 9/64	1/2	4 1/4	18	1 1/2	3 7/64	Vert.	17.1	70.5	23.4	23.6	2.98

Table 1-22
ASTM A6 Tolerances for W-Shapes and HP-Shapes

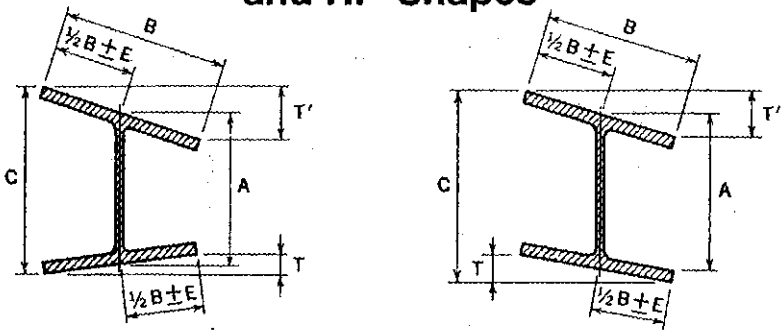

Permissible Cross-Sectional Variations

Nominal Depth, in.	A Depth at Web Centerline, in.		B Flange Width, in.		T + T′ Flanges Out of Square, Max. in.	E[a] Web Off Center, in.	C, Max. Depth at any Cross-Section over Theoretical Depth, in.
	Over	Under	Over	Under			
To 12, incl.	1/8	1/8	1/4	3/16	1/4	3/16	1/4
Over 12	1/8	1/8	1/4	3/16	5/16	3/16	1/4

Permissible Variations in Length

Nominal Depth[b], in.	Variations from Specified Length for Lengths Given, in.			
	30 ft and Under		Over 30 ft	
	Over	Under	Over	Under
Beams 24 in. and under	3/8	3/8	3/8 plus 1/16 for each additional 5 ft or fraction thereof	3/8
Beams over 24 in. All columns	1/2	1/2	1/2 plus 1/16 for each additional 5 ft or fraction thereof	1/2

Mill Straightness Tolerances[c]

Sizes	Length	Permissible Variation in Straightness, in.	
		Camber	Sweep
Flange width equal to or greater than 6 in.	All	$\frac{1}{8}$ in. × $\frac{\text{(total length, ft)}}{10}$	
Flange width less than 6 in.	All	$\frac{1}{8}$ in. × $\frac{\text{(total length, ft)}}{10}$	$\frac{1}{8}$ in. × $\frac{\text{(total length, ft)}}{5}$
Certain sections with a flange width approx. equal to depth & specified on order as columns[d]	45 ft and under	$\frac{1}{8}$ in. × $\frac{\text{(total length, ft)}}{10}$ with 3/8 in. max.	
	Over 45 ft	$\frac{3}{8}$ in. + $\left[\frac{1}{8}\text{ in.} \times \frac{\text{(total length, ft} - 45)}{10}\right]$	

Other Permissible Rolling Variations

Area and Weight	–2.5 to +3.0% from the theoretical cross-sectional area or the specified nominal weight[e]
Ends Out of Square	1/64 in., per in. of depth, or of flange width if it is greater than the depth

[a] Variation of 5/16 in. max. for sections over 426 lb/ft.
[b] For shapes specified in the order for use as bearing piles, the permitted variations are plus 5 in. and minus 0 in.
[c] The tolerances herein are taken from ASTM A6 and apply to the straightness of members received from the rolling mill, measured as illustrated in Figure 1-1.
[d] Applies only to W8×31and heavier, W10×49 and heavier, W12×65 and heavier, W14×90 and heavier, HP8×36, HP10×57, HP12×74 and heavier, and HP14×102 and heavier. If other sections are specified on the order as columns, the tolerance will be subject to negotiation with the manufacturer.
[e] For shapes with a nominal weight ≥ 100 lb/ft, the permitted variation is ±2.5% from the theoretical or specified amount.

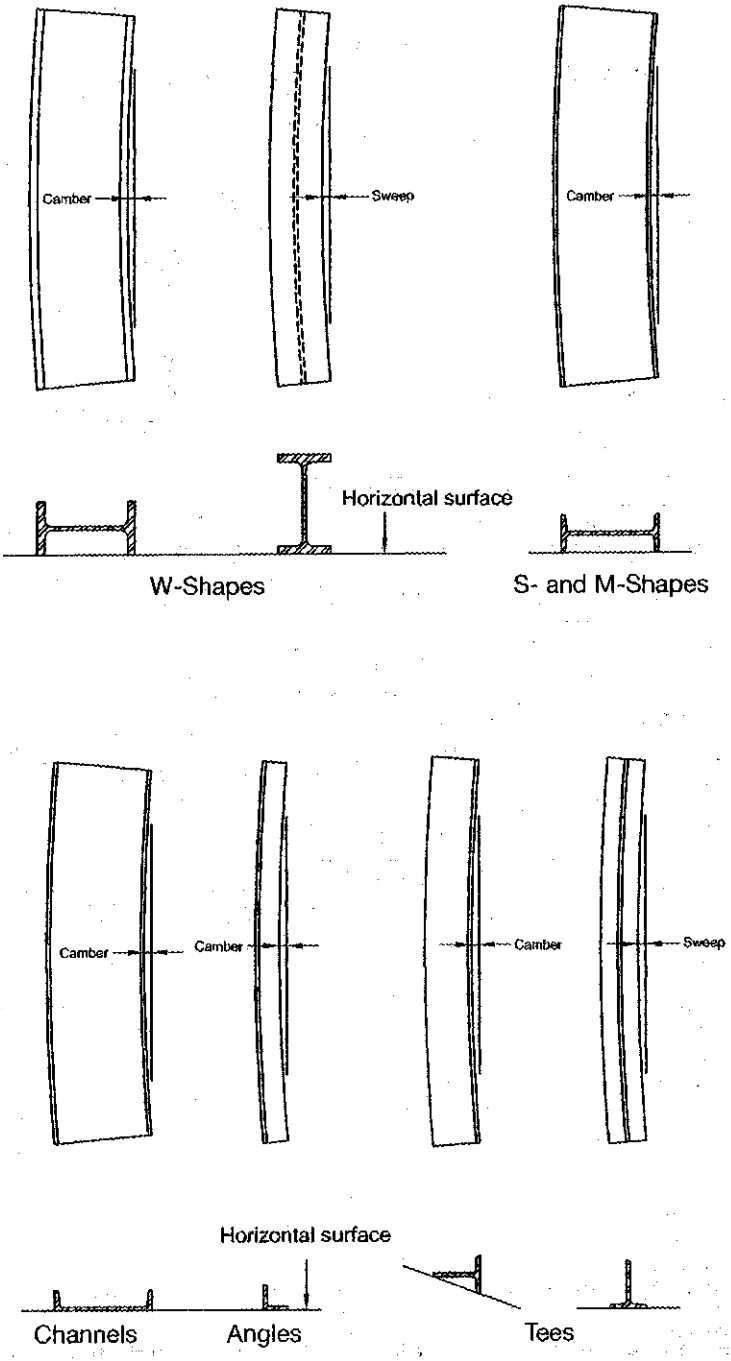

Fig. 1-1. Positions for measuring straightness.

Table 1-23
ASTM A6 Tolerances for S-Shapes, M-Shapes and Channels

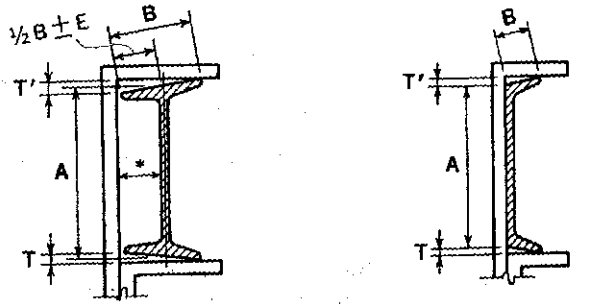

*Back of square and centerline of web to be parallel when measuring "out-of-square"

Permissible Cross-Sectional Variations

Shape	Nominal Depth, in.	A[a] Depth, in.		B Flange Width, in.		T + T'[b] Flanges Out of Square, per in. of B, in.	E Web Off Center, in.
		Over	Under	Over	Under		
S shapes and M shapes	3 to 7, incl.	3/32	1/16	1/8	1/8	1/32	9/18
	Over 7 to 14, incl.	1/8	3/32	5/32	5/32		
	Over 14 to 24, incl.	3/16	1/8	3/16	3/16		
Channels	3 to 7, incl.	3/32	1/16	1/8	1/8	1/32	—
	Over 7 to 14, incl.	1/8	3/32	1/8	5/32		
	Over 14	3/16	1/8	1/8	3/16		

Permissible Variations in Length

Shape	Variations from Specified Length for Lengths Given[c], in.					
	5 to 10 ft, excl.	10 to 20 ft, excl.	20 to 30 ft, incl.	Over 30 to 40 ft, incl.	Over 40 to 65 ft, incl.	Over 65 ft
All	1	1 1/2	1 3/4	2 1/4	2 3/4	—

Mill Straightness Tolerances[d]

Camber	$\frac{1}{8}$ in. $\times \frac{\text{(total length, ft)}}{5}$
Sweep	Due to the extreme variations in flexibility of these shapes, permitted variations for sweep are subject to negotiation between the manufacturer and purchaser for the individual sections involved.

Other Permissible Rolling Variations

Area and Weight	−2.5 to +3.0% from the theoretical cross-sectional area or the specified nominal weight[e]
Ends Out of Square	S-Shapes, M-Shapes and Channels 1/64 in., per in. of depth

— Indicates that there is no requirement.

[a] A is measured at center line of web for S-shapes and M-shapes and at back of web for channels.

[b] T + T' applies when flanges of channels are toed in or out.

[c] The permitted variation under the specified length is 0 in. for all lengths. There are no requirements for lengths over 65 ft.

[d] The tolerances herein are taken from ASTM A6 and apply to the straightness of members received from the rolling mill, measured as illustrated in Figure 1-1.

[e] For shapes with a nominal weight ≥ 100 lb/ft, the permitted variation is ±2.5% from the theoretical or specified amount.

Table 1-24
ASTM A6 Tolerances for WT-, MT- and ST-Shapes

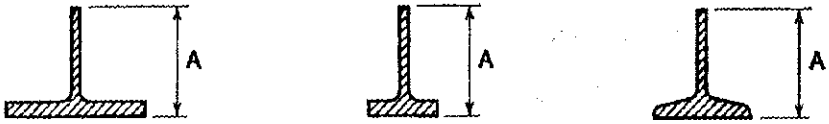

Permissible Variations in Depth	
Dimension A may be approximately one-half beam depth or any dimension resulting from off-center splitting or splitting on two lines, as specified in the order.	
Specified Depth, *A*, in.	**Variations in Depth *A*, Over and Under**
To 6, excl.	1/8
6 to 16, excl.	3/16
16 to 20, excl.	1/4
20 to 24, excl.	5/16
24 and over	3/8
The above variations in depths of tees include the permissible variations in depth for the beams before splitting	
Mill Straightness Tolerances[a]	
Camber and Sweep	$\frac{1}{8}$ in. $\times \frac{\text{(total length, ft)}}{5}$
Other Permissible Rolling Variations	
Other permissible variations in cross section as well as permissible variations in length, area, weight, ends out-of-square, and sweep for WTs will correspond to those of the beam before splitting.	

— Indicates that there is no requirement.

[a] The tolerances herein are taken from ASTM A6 and apply to the straightness of members received from the rolling mill, measured as illustrated in Figure 1-1. For tolerance on induced camber and sweep, see AISC *Code of Standard Practice* Section 6.4.4.

Table 1-25
ASTM A6 Tolerances for Angles, 3 in. and Larger

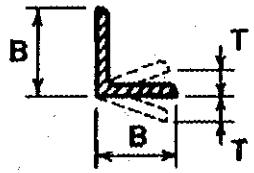

Permissible Cross-Sectional Variations				
Shape	**Nominal Leg Size[a], in.**	***B* Leg Size, in.**		***T* Out of Square per in. of *B*, in.**
		Over	**Under**	
Angles	3 to 4, incl.	1/8	3/32	3/128[b]
	Over 4 to 6, incl.	1/8	1/8	
	Over 6	3/16	1/8	

Permissible Variations in Length				
Variations Over Specified Length for Lengths Given[c], in.				
5 to 10 ft, excl.	**10 to 20 ft, excl.**	**20 to 30 ft, incl.**	**Over 30 to 40 ft, incl.**	**Over 40 to 65 ft, incl.**
1	1 1/2	1 3/4	2 1/4	2 3/4

Mill Straightness Tolerances[d]	
Camber	$\frac{1}{8}$ in. $\times \frac{\text{(total length, ft)}}{5}$, applied to either leg
Sweep	Due to the extreme variations in flexibility of these shapes, permitted variations for sweep are subject to negotiation between the manufacturer and purchaser for the individual sections involved.

Other Permissible Rolling Variations	
Area and Weight	−2.5 to +3.0% from the theoretical cross-sectional area or the specified nominal weight
Ends Out of Square	3/128 in. per in. of leg length, or 1 1/2°. Variations based on the longer leg of unequal angle.

[a] For unequal leg angles, longer leg determines classification.
[b] 3/128 in. per in. ≈ 1 1/2°
[c] The permitted variation under the specified length is 0 in. for all lengths. There are no requirements for lengths over 65 ft.
[d] The tolerances herein are taken from ASTM A6 and apply to the straightness of members received from the rolling mill, measured as illustrated in Figure 1-1.

Table 1-26
ASTM A6 Tolerances for Angles, < 3 in.

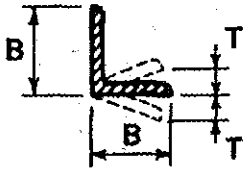

Permissible Cross-Sectional Variations

Specified Leg Size[a], in.	Variations in Thickness for Thicknesses Given, Over and Under, in.			*B* Leg Size, Over and Under, in.	*T* Out of Square per Inch of *B*, in.
	3/16 and Under	Over 3/16 to 3/8 incl.	Over 3/8		
1 and Under	0.008	0.010	—	1/32	3/128[b]
Over 1 to 2, incl.	0.010	0.010	0.012	3/64	
Over 2 to 3, excl.	0.012	0.015	0.015	1/16	

Permissible Variations in Length

Section	Variations Over Specified Length for Lengths Given[c], in.				
	5 to 10 ft, excl.	10 to 20 ft, excl.	20 to 30 ft, incl.	Over 30 to 40 ft, incl.	40 to 65 ft, incl.
All bar-size angles	5/8	1	1 1/2	2	2 1/2

Mill Straightness Tolerances[d]

Camber	$1/4$ in. in any 5 ft, or $1/4$ in. $\times \frac{\text{(total length, ft)}}{5}$, applied to either leg
Sweep	Due to the extreme variations in flexibility of these shapes, permitted variations for sweep are subject to negotiation between the manufacturer and purchaser for the individual sections involved.

Other Permissible Rolling Variations

Ends Out of Square	3/128 in. per in. of leg length, or 1 1/2°. Variations based on the longer leg of unequal angle.

— Indicates that there is no requirement.

[a] For unequal angles, longer leg determines classification.

[b] 3/128 in. per in. = 1 1/2°

[c] The permitted variation under the specified length is 0 in. for all lengths. There are no requirements for lengths over 65 ft.

[d] The tolerances herein are taken from ASTM A6 and apply to the straightness of members received from the rolling mill, measured as illustrated in Figure 1-1.

Table 1-27
Tolerances for Rectangular and Square HSS

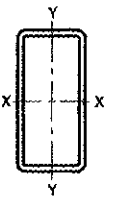

ASTM A500, ASTM A501, ASTM A618 and ASTM A847

Outside Dimensions	The outside dimensions, measured across the flats at positions at least 2 in. from either end, shall not vary from the specified dimensions by more than the applicable amount given in the following table:	
	Largest Outside Dimension Across Flats, in.	Permissible Variation Over and Under Specified Dimensions[a,b], in.
	2½ and under	0.020
	Over 2½ to 3½, incl.	0.025
	Over 3½ to 5½, incl.	0.030
	Over 5½	1%[c]
Length	HSS are commonly produced in random lengths, in multiple lengths, and in specific lengths. When specific lengths are ordered for HSS, the length tolerances shall be in accordance with the following table:	
	Length tolerance for specific lengths, in.	
	22 ft and under	Over 22 ft[f]
	Over: ½ / Under: ¼	Over: ¾ / Under: ¼
Wall Thickness	ASTM A500 and ASTM A847 only: The tolerance for wall thickness exclusive of the weld area shall be plus and minus 10% of the nominal wall thickness specified. The wall thickness is to be measured at the center of the flat.	
Weight	ASTM A501 only: The weight of HSS, as specified in ASTM A501 Tables 3 and 4, shall not be less than the specified value by more than 3.5%.	
Mass	ASTM A618 only: The mass shall not be less than the specified value by more than 3.5%.	
Straightness	The permissible variation for straightness shall be ⅛ in. times the number of ft of total length divided by 5.	
Squareness of Sides	Adjacent sides may deviate from 90° by a tolerance of ± 2° maximum.	
Radius of Corners	The radius of any outside corner of the section shall not exceed 3 times the specified wall thickness[d].	
Twist	The tolerances for twist with respect to axial alignment of the section shall be as shown in the following table:	
	Specified Dimension of Longer Side, in.	Maximum Twist per 3 ft of length, in.
	1½ and under	0.050
	Over 1½ to 2½, incl.	0.062
	Over 2½ to 4, incl.	0.075
	Over 4 to 6, incl.	0.087
	Over 6 to 8, incl.	0.100
	Over 8	0.112
	Twist shall be determined by holding one end of the HSS down on a flat surface plate, measuring the height that each corner on the bottom side of the tubing extends above the surface plate near the opposite end of the HSS, and calculating the difference in the measured heights of such corners[e].	

[a] The respective outside dimension tolerances include the allowances for convexity and concavity.

[b] ASTM A500 and ASTM A847 HSS only: The tolerances given are for the large flat dimension only. For HSS having a ratio of outside large to small flat dimension less than 1.5, the tolerance on the small flat dimesion shall be identical to those given. For HSS having a ratio of outside large to small flat dimension in the range of 1.5 to 3.0 inclusive, the tolerance on the small flat dimesion shall be 1.5 times those given. For HSS having a ratio of outside large to small flat dimension greater than 3.0, the tolerance on the small flat dimension shall be 2.0 times those given.

[c] This value is 0.01 times the large flat dimension. ASTM A501 only: Over 5½ to 10 incl., this value is 0.01 times large flat dimension; over 10, this value is 0.02 times the large flat dimension.

[d] ASTM A501 HSS only: The radius of any outside corner must not exceed 3 times the calculated nominal wall thickness.

[e] ASTM A500, ASTM A501, and ASTM A847 HSS only: For heavier sections it shall be permissible to use a suitable measuring device to determine twist. Twist measurements shall not be taken within 2 in. of the ends of the HSS.

[f] ASTM A501 and A618: The upper limit on specific length is 44 ft.

Table 1-28
Tolerances for Round HSS and Pipe

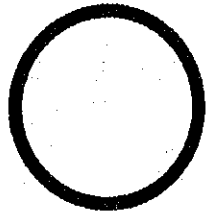

ASTM A53	
Weight	The weight as specified in ASTM A53 Table X2.2 and Table X2.3 or as calculated from the relevant equation in ASME B36.10M shall not vary by more than ± 10%. Note that the weight tolerance is determined from the weights of the customary lifts of pipe as produced for shipment by the mill, divided by the number of ft of pipe in the lift. On pipe sizes over 4 in. where individual lengths may be weighed, the weight tolerance is applicable to the individual length.
Diameter	For pipe 2 in. and over in nominal diameter, the outside diameter shall not vary more than ± 1% from the outside diameter specified.
Thickness	The minimum wall thickness at any point shall not be more than 12.5% under the nominal wall thickness specified.
ASTM A500 and ASTM A847	
Diameter[a]	For HSS 1.900 in. and under in specified diameter, the outside diameter shall not vary more than ± 0.5%, rounded to the nearest 0.005 in., from the specified diameter. For HSS 2.000 in. and over in specified diameter, the outside diameter shall not vary more than ± 0.75%, rounded to the nearest 0.005 in., from the specified diameter.
Thickness	The wall thickness at any point, excluding the weld seam of welded tubing, shall not be more than 10% under or over the specified wall thickness.
ASTM A501 and ASTM A618	
Outside Dimensions	For HSS 1½ in. and under in nominal size, the outside diameter shall not vary more than 1/64 in. over nor more than 1/32 in. under the specified diameter. For round hot-formed HSS 2 in. and over in nominal size, the outside diameter shall not vary more than ± 1% from the specified diameter.
Weight (A501 only)	The weight of HSS, as specified in ASTM A501 Table 5, shall not be less than the specified value by more than 3.5%.
Mass (A618 only)	The mass of HSS shall not be less than the specified value by more than 3.5%. The mass tolerance shall be determined from individual lengths or, for HSS 4½ in. and under in outside diameter, shall be determined from masses of customary lifts produced by the mill.
ASTM A500, ASTM A501, ASTM A618 and ASTM A847	
Length	HSS are commonly produced in random mill lengths, in multiple lengths, and in specific lengths. When specific lengths are ordered for HSS, the length tolerances shall be in accordance with the following table:

Length tolerance for specific cut lengths, in.			
22 ft and under		Over 22 ft[b]	
Over	Under	Over	Under
1/2	1/4	3/4	1/4

Straightness	The permissible variation for straightness of HSS shall be 1/8 in. times the number of ft of total length divided by 5.

[a] The outside diameter measurements shall be taken at least 2 in. from the end of the HSS.
[b] ASTM A501 and A618: The upper limit and specific length is 44 ft.

Table 1-29
Rectangular Plates

Permissible Variations from Flatness(Carbon Steel Only)

Specified Thickness, in.	Variations from Flatness for Specified Widths, in.							
	To 36, excl.	36 to 48, excl.	48 to 60, excl.	60 to 72, excl.	72 to 84, excl.	84 to 96, excl.	96 to 108, excl.	108 to 120, excl.
To 1/4, excl.	9/16	3/4	15/16	1 1/4	1 3/8	1 1/2	1 5/8	1 3/4
1/4 to 3/8, excl.	1/2	5/8	3/4	15/16	1 1/8	1 1/4	1 3/8	1 1/2
3/8 to 1/2, excl.	1/2	9/16	5/8	5/8	3/4	7/8	1	1 1/8
1/2 to 3/4, excl.	7/16	1/2	9/16	5/8	5/8	3/4	1	1
3/4 to 1, excl.	7/16	1/2	9/16	5/8	5/8	5/8	3/4	7/8
1 to 2, excl.	3/8	1/2	1/2	9/16	9/16	5/8	5/8	5/8
2 to 4, excl.	5/16	3/8	7/16	1/2	1/2	1/2	1/2	9/16
4 to 6, excl.	3/8	7/16	1/2	1/2	9/16	9/16	5/8	3/4
6 to 8, excl.	7/16	1/2	1/2	5/8	11/16	3/4	7/8	7/8

Notes:
1. The longer dimension specified is considered the length, and permissible variations in flatness along the length shall not exceed the tabular amount for the specified width for plates up to 12 ft in length, or in any 12 ft for longer plates.
2. The flatness variations across the width shall not exceed the tabular amount for the specified width.
3. When the longer dimension is under 36 in., the permissible variation shall not exceed 1/4 in. When the longer dimension is from 36 to 72 in., inclusive, the permissible variation should not exceed 75% of the tabular amount for the specified width, but in no case less than 1/4 in.
4. These variations apply to plates which have a specified minimum tensile strength of not more than 60 ksi or comparable chemistry or hardness. The limits in the table are increased 50% for plates specified to a higher minimum tensile strength or comparable chemistry or hardness.
5. For plates 8 in. and over in thickness or 120 in. and over in width, see ASTM A6 Table 13.
6. Plates must be in a horizontal position on a flat surface when flatness is measured.

Permissible Variations in Camber[a] for Carbon Steel Sheared and Gas Cut Rectangular Plates

$$\text{Maximum permissible camber, in. (all thicknesses)} = \frac{1}{8}\text{ in.} \times \frac{\text{(total length, ft)}}{5}$$

Permissible Variations in in Camber[a] for High-Strength Low-Alloy and Alloy Steel Sheared, Special-Cut, or Gas-Cut Rectangular Plates

Specified Dimension, in.		Permitted Camber, in.
Thickness	Width	
To 2, incl.	All	$\frac{1}{8}\text{ in.} \times \frac{\text{(total length, ft)}}{5}$
Over 2 to 15, incl.	To 30, incl.	$\frac{3}{16}\text{ in.} \times \frac{\text{(total length, ft)}}{5}$
	Over 30 to 60, incl.	$\frac{1}{4}\text{ in.} \times \frac{\text{(total length, ft)}}{5}$

[a] Camber as it relates to plates is the horizontal edge curvature in the length, measured over the entire length of the plate in the flat position.

PART 2

GENERAL DESIGN CONSIDERATIONS

SCOPE 2–4
APPLICABLE SPECIFICATIONS, CODES AND STANDARDS 2–4
Specifications, Codes and Standards for Structural Steel Buildings 2–4
Additional Requirements for Seismic Applications 2–4
Other AISC Reference Documents 2–5
OSHA REQUIREMENTS 2–6
Columns and Column Base Plates 2–6
Safety Cables 2–6
Beams and Bracing 2–7
Cantilevers 2–7
Joists 2–7
Walking/Working Surfaces 2–8
Controlling Contractor 2–8
USING THE 2010 AISC SPECIFICATION 2–8
Load and Resistance Factor Design (LRFD) 2–9
Allowable Strength Design (ASD) 2–9
DESIGN FUNDAMENTALS 2–10
Loads, Load Factors and Load Combinations 2–10
Load and Resistance Factor Design 2–10
Allowable Strength Design 2–11
Superposition of Loads in Load Combinations 2–12
Nominal Strengths, Resistance Factors, Safety Factors and Available Strengths 2–12
Serviceability 2–12
Structural Integrity 2–13
Progressive Collapse 2–14
Required Strength, Stability, Effective Length, and Second-Order Effects 2–14
Simplified Determination of Required Strength 2–16
Table 2-1. Multipliers for Use With the Simplified Method 2–17
STABILITY BRACING 2–17
Simple-Span Beams 2–17

Beam Ends Supported on Bearing Plates 2–17
Beams and Girders Framing Continuously Over Columns 2–19
PROPERLY SPECIFYING MATERIALS 2–25
Availability 2–25
Material Specifications 2–25
Other Products 2–25
Anchor rods 2–25
Raised-Pattern Floor Plates 2–25
Sheet and Strip 2–26
Filler Metal 2–26
Steel Headed Stud Anchors 2–26
Open-Web Steel Joists 2–26
Castellated Beams 2–26
Steel Castings and Forgings 2–26
Forged Steel Structural Hardware 2–26
Crane Rails 2–27
CONTRACT DOCUMENT INFORMATION 2–27
Design Drawings, Specifications and Other Contract Documents 2–27
Required Information 2–28
Information Required Only When Specified 2–28
Approvals Required 2–29
Establishing Criteria for Connections 2–29
Simple Shear Connections 2–30
Moment Connections 2–31
Horizontal and Vertical Bracing Connections 2–31
Strut and Tie Connections 2–32
Truss Connections 2–32
Column Splices 2–32
CONSTRUCTABILITY 2–32
TOLERANCES 2–33
Mill Tolerances 2–33
Fabrication Tolerances 2–33
Erection Tolerances 2–33
Building Façade Tolerances 2–34

QUALITY CONTROL AND QUALITY ASSURANCE 2–36
CAMBERING, CURVING AND STRAIGHTENING 2–37
Beam Camber and Sweep 2–37
Cold Bending 2–37
Hot Bending 2–37
Truss Camber 2–38
Straightening 2–38
FIRE PROTECTION AND ENGINEERING 2–38
CORROSION PROTECTION 2–38
RENOVATION AND RETROFIT OF EXISTING STRUCTURES 2–38
THERMAL EFFECTS 2–39
Expansion and Contraction 2–39
Elevated-Temperature Service 2–40
FATIGUE AND FRACTURE CONTROL 2–40
Avoiding Brittle Fracture 2–40
Avoiding Lamellar Tearing 2–42
WIND AND SEISMIC DESIGN 2–42
Wind and Low-Seismic Applications 2–42
High-Seismic Applications 2–42
PART 2 REFERENCES 2–44
TABLES FOR THE GENERAL DESIGN AND SPECIFICATION OF MATERIALS 2–47
Table 2-2. Summary Comparison of Methods for Stability Analysis and Design 2–47
Table 2-3. AISI Standard Nomenclature for Flat-Rolled Carbon Steel 2–47
Table 2-4. Applicable ASTM Specifications for Various Structural Shapes 2–48
Table 2-5. Applicable ASTM Specifications for Plate and Bars 2–49
Table 2-6. Applicable ASTM Specifications for Various Types of Structural Fasteners 2–50
Table 2-7. Metal Fastener Compatibility to Resist Corrosion 2–51
Table 2-8. Summary of Surface Preparation Specifications 2–52

SCOPE

The specification requirements and other design considerations summarized in this Part apply in general to the design and construction of steel buildings. The specifications, codes and standards listed below are referenced throughout this manual.

APPLICABLE SPECIFICATIONS, CODES AND STANDARDS

Specifications, Codes and Standards for Structural Steel Buildings

Subject to the requirements in the applicable building code and the contract documents, the design, fabrication and erection of structural steel buildings is governed as indicated in the AISC *Specification* Sections A1 and B2 as follows:

1. ASCE/SEI 7: *Minimum Design Loads for Buildings and Other Structures,* ASCE/SEI 7-10 (ASCE, 2010). Available from the American Society of Civil Engineers, ASCE/SEI 7 provides the general requirements for loads, load factors and load combinations.
2. AISC *Specification*: The 2010 AISC *Specification for Structural Steel Buildings* (ANSI/AISC 360-10), included in Part 16 of this Manual and available at **www.aisc.org**, provides the general requirements for design and construction (AISC, 2010a).
3. AISC *Code of Standard Practice*: The 2010 AISC *Code of Standard Practice for Steel Buildings and Bridges* (AISC, 2010c) included in Part 16 of this manual and available at **www.aisc.org**, provides the standard of custom and usage for the fabrication and erection of structural steel.

Other referenced standards include:

1. RCSC *Specification*: The 2009 RCSC *Specification for Structural Joints Using High-Strength Bolts*, reprinted in Part 16 of this Manual with the permission of the Research Council on Structural Connections and available at **www.boltcouncil.org**, provides the additional requirements specific to bolted joints with high-strength bolts (RCSC, 2009).
2. AWS D1.1: *Structural Welding Code – Steel*, AWS D1.1:2010 (AWS, 2010). Available from the American Welding Society, AWS D1.1 provides additional requirements specific to welded joints. Requirements for the proper specification of welds can be found in AWS A2.4: *Standard Symbols for Welding, Brazing, and Nondestructive Examination* (AWS, 2007).
3. ACI 318: *Building Code Requirements for Structural Concrete and Commentary* (ACI, 2008). Available from the American Concrete Institute, ACI 318 provides additional requirements for reinforced concrete, including composite design and the design of steel-to-concrete anchorage.

Various other specifications and standards from ASME, ASTM and ACI are also referenced in AISC *Specification* Section A2.

Additional Requirements for Seismic Applications

The 2010 AISC *Seismic Provisions for Structural Steel Buildings* (AISC, 2010b) apply as indicated in Section A1.1 of the 2010 AISC *Specification* and in the Scope provided at the front of this Manual. The AISC *Seismic Provisions* are available at **www.aisc.org**.

Other AISC Reference Documents

The following other AISC publications may be of use in the design and construction of structural steel buildings:

1. AISC *Detailing for Steel Construction*, Third Edition, covers the standard practices and recommendations for steel detailing, including preparation of shop and erection drawings (AISC, 2009).
2. The AISC *Seismic Design Manual* (AISC, 2006) provides guidance on steel design in seismic applications, in accordance with the 2005 AISC *Seismic Provisions for Structural Steel Buildings*.
3. The AISC *Design Examples* is a web-based companion to this Manual and can be found at **www.aisc.org** (AISC, 2011). It includes design examples outlining the application of design aids and AISC *Specification* provisions developed in coordination with this Manual.

Additionally, the following AISC Design Guides are available at **www.aisc.org** for in-depth coverage of specific topics in steel design:

1. *Base Plate and Anchor Rod Design*, Design Guide 1 (Fisher and Kloiber, 2006)
2. *Steel and Composite Beams with Web Openings*, Design Guide 2 (Darwin, 1990)
3. *Serviceability Design Considerations for Steel Buildings*, Design Guide 3 (West and Fisher, 2003)
4. *Extended End-Plate Moment Connections—Seismic and Wind Applications*, Design Guide 4 (Murray and Sumner, 2003)
5. *Low- and Medium-Rise Steel Buildings*, Design Guide 5 (Allison, 1991).
6. *Load and Resistance Factor Design of W-Shapes Encased in Concrete*, Design Guide 6 (Griffis, 1992)
7. *Industrial Buildings—Roofs to Anchor Rods*, Design Guide 7 (Fisher, 2004)
8. *Partially Restrained Composite Connections*, Design Guide 8 (Leon et al., 1996)
9. *Torsional Analysis of Structural Steel Members*, Design Guide 9 (Seaburg and Carter, 1997)
10. *Erection Bracing of Low-Rise Structural Steel Buildings*, Design Guide 10 (Fisher and West, 1997)
11. *Floor Vibrations Due to Human Activity*, Design Guide 11 (Murray et al., 1997)
12. *Modification of Existing Welded Steel Moment Frame Connections for Seismic Resistance*, Design Guide 12 (Gross et al., 1999)
13. *Stiffening of Wide-Flange Columns at Moment Connections: Wind and Seismic Applications*, Design Guide 13 (Carter, 1999)
14. *Staggered Truss Framing Systems*, Design Guide 14 (Wexler and Lin, 2002)
15. *AISC Rehabilitation and Retrofit Guide—A Reference for Historic Shapes and Specifications*, Design Guide 15 (Brockenbrough, 2002)
16. *Flush and Extended Multiple-Row Moment End-Plate Connections*, Design Guide 16 (Murray and Shoemaker, 2002)
17. *High Strength Bolts—A Primer for Structural Engineers*, Design Guide 17 (Kulak, 2002)
18. *Steel-Framed Open-Deck Parking Structures*, Design Guide 18 (Churches et al. 2003)
19. *Fire Resistance of Structural Steel Framing*, Design Guide 19 (Ruddy et al., 2003)
20. *Steel Plate Shear Walls*, Design Guide 20 (Sabelli and Bruneau, 2006)

21. *Welded Connections—A Primer for Engineers*, Design Guide 21 (Miller, 2006)
22. *Façade Attachments to Steel-Framed Buildings*, Design Guide 22 (Parker, 2008)
23. *Constructability of Structural Steel Buildings*, Design Guide 23 (Ruby, 2008)
24. *Hollow Structural Section Connections*, Design Guide 24 (Packer et al., 2010)
25. *Web-Tapered Frame Design*, Design Guide 25 (Kaehler and White, 2010)

OSHA REQUIREMENTS

OSHA *Safety and Health Standards for the Construction Industry, 29 CFR 1926 Part R Safety Standards for Steel Erection* (OSHA, 2001) must be addressed in the design, detailing, fabrication and erection of steel structures. These regulations became effective on July 18, 2001.

Following is a brief summary of selected provisions and related recommendations. The full text of the regulations should be consulted and can be found at **www.osha.gov**. See also Barger and West (2001) for further information.

Columns and Column Base Plates

1. All column base plates must be designed and fabricated with a minimum of four anchor rods.
2. Posts (which weigh less than 300 lb) are distinguished from columns and excluded from the four-anchor-rod requirement.
3. Columns, column base plates, and their foundations must be designed to resist a minimum eccentric gravity load of 300 lb located 18 in. from the extreme outer face of the column in each direction at the top of the column shaft.
4. Column splices must be designed to meet the same load-resisting characteristics as columns.
5. Double connections through column webs or at beams that frame over the tops of columns must be designed to have at least one installed bolt remain in place to support the first beam while the second beam is being erected. Alternatively, the fabricator must supply a seat or equivalent device with a means of positive attachment to support the first beam while the second beam is being erected.

These features should be addressed in the construction documents. Items 1 through 4 are prescriptive, and alternative means such as guying are time consuming and costly. There are several methods to address the condition in item 5, as shown in Chapter 2 of AISC *Detailing for Steel Construction*.

Safety Cables

1. On multi-story structures, perimeter safety cables (two lines) are required at final interior and exterior perimeters of floors as soon as the deck is installed.
2. Perimeter columns must extend 48 in. above the finished floor (unless constructability does not allow) to allow the installation of perimeter safety cables.
3. The regulations prohibit field welding of attachments for installation of perimeter safety cables once the column has been erected.
4. Provision of some method of attaching the perimeter cable is required, but responsibility is not assigned either to the fabricator or to the erector. While this will be subject

to normal business arrangements between the fabricator and the erector, holes for these cables are often punched or drilled in columns by the fabricator.

The primary consideration in the design of the frame based on these rules is that the position of the column splice is set with respect to the floor.

Beams and Bracing

1. Solid-web members (beams) must be connected with a minimum of two bolts or their equivalent before the crane load line is released.
2. Bracing members must be connected with a minimum of one bolt or its equivalent before the crane load line is released.

The OSHA regulations allow an alternative to these minimums, if an "equivalent as specified by the project structural engineer of record" is provided. If the project requirements do not permit the use of bolts as described in items 1 and 2, then the "equivalent" means should be provided in the construction documents. It is recommended that the "equivalent" means should utilize bolts and removable connection material, and should provide requirements for the final condition of the connection. Solutions that employ shoring or the need to hold the member on the crane should be avoided.

Cantilevers

1. The erector is responsible for the stability of cantilevers and their temporary supports until the final cantilever connection is completed. OSHA 1926.756(a)(2) requires that a competent person shall determine if more than two bolts are necessary to ensure the stability of cantilevered members. Cantilever connections must be evaluated for the loads imposed on them during erection and consideration must be made for the intermediate states of completion, including the connection of the backspan member opposing the cantilever.

Certain cantilever connections can facilitate the erector's work in this regard, such as shop attaching short cantilevers, one piece cantilever/backspan beams carried through or over the column at the cantilever and field bolted flange plates or end plate connections to the supporting member. To the extent allowed by the contract documents, the selection of details is up to the fabricator, subject to normal business relations between the fabricator and the erector.

Joists

1. Unless panelized, all joists 40 ft long and longer and their bearing members must have holes to allow for initial connections by bolting.
2. Establishment of bridging terminus points for joists is mandated according to OSHA and manufacturer guidelines.
3. A vertical stabilizer plate to receive the joist bottom chord must be provided at columns. Minimum sizes are given and the stabilizer plate must have a hole for the attachment of guying or plumbing cables.

These features should be addressed in the construction documents and shop drawings.

Walking/Working Surfaces

1. Framed metal deck openings must have structural members configured with projecting elements turned down to allow continuous decking, except where not allowed by design constraints or constructability. The openings in the metal deck are not to be cut until the hole is needed.
2. Steel headed stud anchors, threaded studs, reinforcing bars and deformed anchors that will project vertically from or horizontally across the top flange of the member are not to be attached to the top flanges of beams, joists or beam attachments until after the metal decking or other walking/working surface has been installed.

Framing at openings with down turned elements and shop versus field attachment of anchors should be addressed in the construction documents and the shop drawings.

Controlling Contractor

1. The controlling contractor must provide adequate site access and adequate storage.
2. The controlling contractor must notify the erector of repairs or modifications to anchor rods in writing. Such modifications and repairs must be approved by the owner's designated representative for design.
3. The controlling contractor must give notice that the supporting foundations have achieved sufficient strength to allow safe steel erection.
4. The controlling contractor must either provide overhead protection or prohibit other trades from working under steel erection activities.

These provisions establish relationships among the erector, controlling contractor and owner's representative for design that all parties need to be aware of.

USING THE 2010 AISC SPECIFICATION

The 2010 AISC *Specification for Structural Steel Buildings* (ANSI/AISC 360-10) continues the format established in the 2005 edition of the *Specification* (AISC, 2005), ANSI/AISC 360-05, which unified the design provisions formerly presented in the 1989 *Specification for Structural Steel Buildings—Allowable Stress Design and Plastic Design* and the 1999 *Load and Resistance Factor Design Specification for Structural Steel Buildings*. The 2005 *Specification for Structural Steel Buildings* also integrated into a single document the information previously provided in the 1993 *Load and Resistance Factor Design Specification for Single-Angle Members* and the 1997 *Specification for the Design of Steel Hollow Structural Sections*. The 2010 AISC *Specification*, in combination with the 2010 *Seismic Provisions for Structural Steel Buildings* (ANSI/AISC 341-10), brings together all of the provisions needed for the design of structural steel in buildings and other structures.

The 2010 AISC *Specification* continues to present two approaches for the design of structural steel members and connections. Chapter B establishes the general requirements for analysis and design. It states that "designs shall be made according to the provisions for Load and Resistance Factor Design (LRFD) or to the provisions for Allowable Strength Design (ASD)." These two approaches are equally valid for any structure for which the *Specification* is applicable. There is no preference stated or implied in the provisions.

The required strength of structural members and connections may be determined by elastic, inelastic or plastic analysis for the load combinations associated with LRFD and by elastic analysis for load combinations associated with ASD and as stipulated by the applicable building code. In all cases, the available strength must exceed the required strength. The AISC *Specification* gives provisions for determining the available strength as summarized below.

Load and Resistance Factor Design (LRFD)

The load combinations appropriate for LRFD are given in the applicable building code or, in its absence, ASCE/SEI 7 Section 2.3. For LRFD, the available strength is referred to as the design strength. All of the LRFD provisions are structured so that the design strength must equal or exceed the required strength. This is presented in AISC *Specification* Section B3.3 as

$$R_u \leq \phi R_n \tag{2–1}$$

In this equation, R_u is the required strength determined by analysis for the LRFD load combinations, R_n is the nominal strength determined according to the AISC *Specification* provisions, and ϕ is the resistance factor given by the AISC *Specification* for a particular limit state. Throughout this Manual, tabulated values of ϕR_n, the design strength, are given for LRFD. These values are tabulated as blue numbers in columns with the heading LRFD.

If there is a desire to use the LRFD provisions in the form of stresses, the strength provisions can be transformed into stress provisions by factoring out the appropriate section property. In many cases, the provisions are already given directly in terms of stress.

Allowable Strength Design (ASD)

Allowable strength design is similar to what is known as allowable stress design in that they are both carried out at the same load level. Thus, the same load combinations are used. The difference is that for strength design, the primary provisions are given in terms of forces or moments rather than stresses. In every situation, these strength provisions can be transformed into stress provisions by factoring out the appropriate section property. In many cases, the provisions are already given directly in terms of stress.

The load combinations appropriate for ASD are given by the applicable building code or, in its absence, ASCE/SEI 7 Section 2.4. For ASD, the available strength is referred to as the allowable strength. All of the ASD provisions are structured so that the allowable strength must equal or exceed the required strength. This is presented in AISC *Specification* Section B3.4 as

$$R_a \leq \frac{R_n}{\Omega} \tag{2–2}$$

In this equation, R_a is the required strength determined by analysis for the ASD load combinations, R_n is the nominal strength determined according to the AISC *Specification* provisions and Ω is the safety factor given by the *Specification* for a particular limit state. Throughout this Manual, tabulated values of R_n/Ω, the allowable strength, are given for ASD. These values are tabulated as black numbers on a green background in columns with the heading ASD.

DESIGN FUNDAMENTALS

It is commonly believed that ASD is an elastic design method based entirely on a stress format without limit states and LRFD is an inelastic design method based entirely on a strength format with limit states. Traditional ASD was based on limit-states principles too, but without the use of the term. Additionally, either method can be formulated in a stress or strength basis, and both take advantage of inelastic behavior. The AISC *Specification* highlights how similar LRFD and ASD are in its formulation, with identical provisions throughout for LRFD and ASD.

Design according to the AISC *Specification*, whether it is according to LRFD or ASD, is based on limit states design principles, which define the boundaries of structural usefulness. Strength limit states relate to load carrying capability and safety. Serviceability limit states relate to performance under normal service conditions. Structures must be proportioned so that no applicable strength or serviceability limit state is exceeded.

Normally, several limit states will apply in the determination of the nominal strength of a structural member or connection. The controlling limit state is normally the one that results in the least available strength. As an example, the controlling limit state for bending of a simple beam may be yielding, local buckling, or lateral-torsional buckling for strength and deflection, or vibration for serviceability. The tabulated values may either reflect a single limit state or a combination of several limit states. This will be clearly stated in the introduction to the particular tables.

Loads, Load Factors and Load Combinations

Based on AISC *Specification* Sections B3.3 and B3.4, the required strength (either P_u, M_u, V_u, etc. for LRFD or P_a, M_a, V_a, etc. for ASD) is determined for the appropriate load magnitudes, load factors and load combinations given in the applicable building code. These are usually based on ASCE/SEI 7, which may be used when there is no applicable building code. The common loads found in building structures are:

D = dead load
L = live load due to occupancy
L_r = roof live load
S = snow load
R = nominal load due to initial rainwater or ice exclusive of the ponding contribution
W = wind load
E = earthquake load

Load and Resistance Factor Design

For LRFD, the required strength is determined from the following factored combinations,[1] which are based on ASCE/SEI 7 Section 2.3:

1. $1.4D$ (2-3a)
2. $1.2D + 1.6L + 0.5(L_r \text{ or } S \text{ or } R)$ (2-3b)
3. $1.2D + 1.6(L_r \text{ or } S \text{ or } R) + (0.5L \text{ or } 0.5W)$ (2-3c)
4. $1.2D + 1.0W + 0.5L + 0.5(L_r \text{ or } S \text{ or } R)$ (2-3d)

[1] Exception: Per ASCE/SEI 7, the load factor on L in combinations 3, 4 and 5 shall equal 1.0 for garages, areas occupied as places of public assembly, and all areas where the live load is greater than 100 psf.

5. $1.2D + 1.0E + 0.5L + 0.2S$ (2-3e)
6. $0.9D + 1.0W$ (2-3f)
7. $0.9D + 1.0E$ (2-3g)

The load combinations for LRFD recognize that, when several transient loads act in combination, only one assumes its maximum lifetime value,[2] while the other(s) are at their "arbitrary-point-in-time" (APT) values. Each combination models the total design loading condition when a different load is at its maximum. Thus, the maximum-lifetime load effect is amplified by an amount that is proportional to its relative variability and the APT load effect(s) are factored to their mean value(s). With this approach, the margin of safety varies with the load combination yielding a more uniform reliability than would be expected when nominal loads are combined directly.

Dead load, D, is present in each load combination with a load factor of 1.2, except in load combination 1, where it is the dominant (only) load effect, and load combinations 6 and 7, where it is reduced for calculation of the overturning or uplift effect. The 1.2 load factor accounts for the statistical variability of the dead load. The designer must independently account for other contributions to dead load, such as the weight of additional concrete, if any, added to adjust for concrete ponding effects (Ruddy, 1986) or differing framing elevations.

Allowable Strength Design

For ASD, the required strength is determined from the following combinations, which are also based on ASCE/SEI 7 Section 2.4:

1. D (2-4a)
2. $D + L$ (2-4b)
3. $D + (L_r \text{ or } S \text{ or } R)$ (2-4c)
4. $D + 0.75L + 0.75(L_r \text{ or } S \text{ or } R)$ (2-4d)
5. $D + (0.6W \text{ or } 0.7E)$ (2-4e)

6a. $D + 0.75L + 0.75(0.6W) + 0.75(L_r \text{ or } S \text{ or } R)$ (2-4f)

6b. $D + 0.75L + 0.75(0.7E) + 0.75S$ (2-4g)

7. $0.6D + 0.6W$ (2-4h)
8. $0.6D + 0.7E$ (2-4i)

The load combinations for ASD combine the code-specified nominal loads directly with no factors for those cases where loads with minimal variation with time are combined, cases 1, 2 and 3. For those cases where multiple time-variable loads are included, a 0.75 reduction factor is applied to the time-variable loads only. Since all of the safety in an ASD design comes through the introduction of the safety factor on the resistance side of the equation, each load case uses the same safety factor for a given limit state.

In ASD, when considering members subjected to gravity loading only, it is clear that the controlling load combination is the one that adds the larger live load to the dead load. Thus, for a floor that does not carry roof load, the controlling combination will be $D + L$ while for a roof the controlling combination will be $D + (L_r \text{ or } S \text{ or } R)$. For gravity columns, after live load reductions have been accounted for, the floor and roof live loads may be reduced to 0.75 of their nominal values. A similar reduction is permitted for live loads in combination with lateral loads.

[2] Usually based upon a 50-year recurrence, except for seismic loads.

Superposition of Loads in Load Combinations

Whether the loads themselves or the effects of those loads are used in these combinations, LRFD or ASD, the results are the same, provided the principle of superposition is valid. This is true when deflections are small and the stress-strain behavior is nominally elastic. However, when second-order effects are significant or the behavior is inelastic, superposition is not valid and the loads, rather than the load effects, should be used in these combinations.

Nominal Strengths, Resistance Factors, Safety Factors and Available Strengths

The AISC *Specification* requires that the available strength must be greater than or equal to the required strength for any element. The available strength is a function of the nominal strength given by the *Specification* and the corresponding resistance factor or safety factor. As discussed earlier, the required strength can be determined either with LRFD or ASD load combinations.

The available strength for LRFD is the design strength, which is calculated as the product of the resistance factor ϕ and the nominal strength (ϕP_n, ϕM_n, ϕV_n, etc.) The available strength for ASD is the allowable strength, which is calculated as the quotient of the nominal strength and the corresponding safety factor Ω (P_n/Ω, M_n/Ω, V_n/Ω, etc.).

In LRFD, the margin of safety for the loads is contained in the load factors, and resistance factors, ϕ, to account for unavoidable variations in materials, design equations, fabrication and erection. In ASD, a single margin of safety for all of these effects is contained in the safety factor, Ω.

The resistance factors, ϕ, and safety factors, Ω, in the AISC *Specification* are based upon research, as discussed in the AISC *Specification* Commentary to Chapter B, and the experience and judgment of the AISC Committee on Specifications. In general, ϕ is less than unity and Ω is greater than unity. The higher the variability in the test data for a given nominal strength, the lower its ϕ factor and the higher its Ω factor will be. Some examples of ϕ and Ω factors for steel members are as follows:

$\phi = 0.90$ for limit states involving yielding
$\phi = 0.75$ for limit states involving rupture

$\Omega = 1.67$ for limit states involving yielding
$\Omega = 2.00$ for limit states involving rupture

The general relationship between the safety factor, Ω, and the resistance factor, ϕ, is

$$\Omega = \frac{1.5}{\phi} \tag{2–5}$$

Serviceability

Serviceability requirements of the AISC *Specification* are found in Section B3.9 and Chapter L. The serviceability limit states should be selected appropriately for the specific application as discussed in the *Specification* Commentary to Chapter L. Serviceability limit states and the appropriate load combinations for checking their conformance to

serviceability requirements can be found in ASCE/SEI 7 Appendix C and its Commentary. It should be noted that the load combinations in ASCE/SEI 7 Section 2.3 for LRFD and Section 2.4 for ASD are both for strength design, and are not necessarily appropriate for consideration of serviceability.

Guidance is also available in the Commentary to the AISC *Specification*, both in general and for specific criteria, including camber, deflection, drift, vibrations, wind-induced motion, expansion and contraction, and connection slip. Additionally, the applicable building code may provide some further guidance or establish requirements. See also the serviceability discussions in Parts 3 through 6, AISC Design Guide 3, *Serviceability Design Considerations for Steel Buildings* (West and Fisher, 2003) and AISC Design Guide 11, *Floor Vibrations Due to Human Activity* (Murray et al., 1997).

Structural Integrity

Structural integrity as introduced into building codes and the 2010 AISC *Specification* Section B3.2, is a set of prescriptive requirements for connections that, when met, are intended to provide an unknown, but satisfactory, level of performance of the finished structure. The term structural integrity has often been used interchangeably with progressive collapse, but these two concepts have widely varying interpretations that can influence design in a variety of ways. The term progressive collapse does not appear in the *International Building Code* (ICC, 2009) or in the 2010 AISC *Specification*. Progressive collapse requirements generally are intended to prevent the collapse of a structure beyond a localized area of the structure where a structural element has been compromised. Progressive collapse requirements are often mandated for government facilities, or by owners for structures which have a high probability of being subject to terrorist attack.

Structural integrity has always been one of the goals for the structural engineer in engineering design, and for the committees writing design standards. However, it has only been since the collapse of the buildings at the World Trade Center that requirements with the stated purpose of addressing structural integrity have appeared in U.S. building codes. The first building code to incorporate specific structural integrity requirements was the 2008 New York City Building Code which was quickly followed by requirements in the 2009 *International Building Code*. Although the requirements of these two building codes are both prescriptive in nature, there are some differences in requirements and their application. The AISC *Specification* Section B3.2 addresses the requirements of the 2009 *International Building Code*.

The 2009 *International Building Code* stipulates minimum integrity provisions for buildings classified as high-rise and assigned to Occupancy Categories III or IV. High-rise buildings are defined as those having an occupied floor greater than 75 ft above fire department vehicle access. The structural integrity requirements state that column splices must resist a minimum tension force and beam end connections must resist a minimum axial tension force. The nominal axial tension strength of the beam end connection must equal or exceed either the required vertical shear strength for ASD or $^2/_3$ the required vertical shear strength for LRFD. These required strengths can be reduced by 50% if the beam supports a composite deck with the prescribed steel anchors (Geschwindner and Gustafson, 2010).

The *International Building Code* structural integrity requirements for the axial tension capacity of the beam end connections use a nominal strength basis reflecting the intent of the code to avoid brittle rupture failures of the connection components, rather than limiting

deformations or yielding of those components. Section B3.2 of the 2010 AISC *Specification* is based on this difference in limit state requirements for resistance to the prescriptive structural integrity loads, as compared to those limit states required when designing for traditional load combinations.

Progressive Collapse

Progressive collapse is defined in ASCE/SEI 7-10 (ASCE, 2010) as "the spread of an initial local failure from element to element resulting, eventually, in the collapse of an entire structure or a disproportionately large part of it."

Progressive collapse requirements often involve assessment of the structure's ability to accommodate loss of a member that has been compromised through redistribution of forces throughout the remaining structure. Design for progressive collapse poses a particularly challenging problem since it is difficult to identify the load cases to be examined or the members that may be compromised. Two main sources of requirements for evaluation of structures for progressive collapse are the Department of Defense and the General Services Administration. For facilities covered by the Department of Defense, all new and existing buildings of three stories or more must be designed to avoid progressive collapse. The specific requirements are published in United Facilities Criteria 4-023-03, "Design of Buildings to Resist Progressive Collapse" (DOD, 2009).

For federal facilities under the jurisdiction of the General Services Administration, threat independent guidelines have been developed. The publication "Progressive Collapse Analysis and Design Guidelines for New Federal Office Buildings and Major Modernization Projects" (USGSA, 2003) provides an explicit process that any structural engineer could use to evaluate the progressive collapse potential of a multi-story facility.

Required Strength, Stability, Effective Length, and Second-Order Effects

As previously discussed, the AISC *Specification* requires that the required strength must be less than or equal to the available strength in the design of every member and connection. Chapter C also requires that stability shall be provided for the structure as a whole and each of its elements. Any method that considers the influence of second-order effects, also known as *P*-delta effects, may be used. Thus, required strengths must be determined including second-order effects, as described in *Specification* Section C2.1. Note that *Specification* Section C2.1(2) permits an amplified first-order analysis as one method of second-order analysis, as provided in Appendix 8.

Second-order effects are the additional forces, moments and displacements resulting from the applied loads acting in their displaced positions as well as the changes from the undeformed to the deformed geometry of the structure. Second-order effects are obtained by considering equilibrium of the structure within its deformed geometry. There are numerous ways of accounting for these effects. The commentary to AISC *Specification* Chapter C provides some guidance on methods of second-order analysis and suggests several benchmark problems for checking the adequacy of analysis methods.

Since 1963, there have been provisions in the AISC Specifications to account for second-order effects. Initially these provisions were embedded in the interaction equations. In past ASD Specifications, second-order effects were accounted for by the term

$$\frac{1}{1-\frac{f_a}{F_e'}}$$

found in the interaction equation. In past LRFD Specifications, the factors B_1 and B_2 from Chapter C of those specifications were used to amplify moments to account for second-order effects. B_1 was used to account for the second-order effects due to member curvature and B_2 was used to account for second-order effects due to sidesway. In both Specifications, more exact methods were permitted.

AISC *Specification* Section C1 and Appendix 7 provide three approaches that may be followed.

- The *direct analysis method* is provided in Chapter C. This is the most comprehensive and, as the name suggests, most direct approach to incorporating all necessary factors in the analysis. Through the use of notional loads, reduced stiffness, and a second-order analysis, the design can be carried out with the forces and moments from the analysis and an effective length equal to the member length, $K = 1.0$. Section C2 of the AISC *Specification* details the requirements for determination of required strengths using this method.
- The *effective length method* is given in AISC *Specification* Appendix 7, Section 7.2. In this method, all gravity-only load cases have a minimum lateral load equal to 0.2% of the story gravity load applied. A second order analysis is carried out and the member strengths of columns and beam-columns are determined using effective lengths, determined by elastic buckling analysis, or more commonly, the alignment charts in the Commentary to the *Specification* when the associated assumptions are satisfied. The *Specification* permits $K = 1.0$ when the ratio of second order drift to first order drift is less than or equal to 1.1.
- The *first-order analysis method* is given in AISC *Specification* Appendix 7, Section 7.3. With this approach, second-order effects are captured through the application of an additional lateral load equal to at least 0.42% of the story gravity load applied in each load case. No further second-order analysis is necessary. The required strengths are taken as the forces and moments obtained from the analysis and the effective length factor is $K = 1.0$.

When a second-order analysis is called for in the above methods, AISC *Specification* Section C1 allows any method that properly considers *P*-delta effects. One such method is amplified first-order elastic analysis provided in *Specification* Appendix 8. This is a modified carry over of the B_1-B_2 approach used in previous LRFD Specifications, which was an extension of the simple approach taken in past ASD Specifications.

The AISC *Specification* fully integrates the provisions for stability with the specified methods of design. For all framing systems, when using the direct analysis method, AISC *Specification* Section C3 provides that the effective length factor, K, for all members can be taken as 1.0 unless a lesser value can be justified by analysis. For the effective length method, AISC *Specification* Appendix 7, Section 7.2.3(a) provides that in braced frames, the effective length factor, K, may be taken as 1.0. For moment frames, Appendix 7, Section 7.2.3(b) requires that a critical buckling analysis to determine the critical buckling stress, F_e, be performed or effective length factors, K, be used. For the first-order analysis method,

Appendix Section 7.3.3 stipulates that the effective length factor, K, be taken as unity for all members. This is discussed in more detail in the Commentary to Appendix 7.

Simplified Determination of Required Strength

When a fast, conservative solution is desired, the following simplification of the effective length method can be used with the aid of Table 2-1. The features of each of the other methods of design for stability are summarized and compared in Table 2-2.

An approximate second-order analysis approach is provided in AISC *Specification* Appendix 8. Where the member amplification (P-δ) factor is small, that is, less than B_2, it is conservative to amplify the total moment and force by B_2. Thus, Equations A-8-1 and A-8-2 become

$$M_r = B_1 M_{nt} + B_2 M_{lt} = B_2 M_u \tag{2-6}$$

$$P_r = P_{nt} + B_2 P_{lt} = B_2 P_u \tag{2-7}$$

To use this simplified method, B_1 cannot exceed B_2. For members not subject to transverse loading between their ends, it is very unlikely that B_1 would be greater than 1.0. In addition, the simplified approach is not valid if the amplification factor, B_2, is greater than 1.5, because with the exception of taking $B_1 = B_2$, this simplified method meets the provisions of the effective length method in AISC *Specification* Appendix 7. It is up to the engineer to ensure that the frame is proportioned appropriately to use this simplified approach. In most designs it is not advisable to have a final structure where the second order amplification is greater than 1.5, although it is acceptable. In those cases, one should consider stiffening the structure.

Step 1: Perform a first-order elastic analysis. Gravity load cases must include a minimum lateral load at each story equal to 0.002 times the story gravity load where the story gravity load is the load introduced at that story, independent of any loads from above.

Step 2: Establish the design story drift limit and determine the lateral load that produces that drift. This is intended to be a measure of the lateral stiffness of the structure.

Step 3: Determine the ratio of the total story gravity load to the lateral load determined in Step 2. For an ASD design, this ratio must be multiplied by 1.6 before entering Table 2-1. This ratio is part of the determination of the calculation on the elastic critical buckling strength, $P_{e\,story}$, in AISC *Specification* Equation A-8-7, which includes the parameter R_m. R_m is a minimum of 0.85 for rigid frames and 1.0 for all other frames.

Step 4: Multiply all of the forces and moments from the first-order analysis by the value obtained from Table 2-1. Use the resulting forces and moments as the required strengths for the designs of all members and connections. Note that B_2 must be computed for each story and in each principal direction.

Step 5: For all cases where the multiplier is 1.1 or less, shown shaded in Table 2-1, the effective length may be taken as the member length, $K = 1.0$. For cases where the multiplier is greater than 1.1 but does not exceed 1.5, determine the effective length factor through analysis, such as with the alignment charts of the AISC *Specification*

TABLE 2-1
Multipliers for Use With the Simplified Method

Design Story Drift Limit	Load Ratio from Step 3 (times 1.6 for ASD, 1.0 for LRFD)										
	0	5	10	20	30	40	50	60	80	100	120
H/100	1	1.1	1.1	1.3	**1.5**/1.4	When ratio exceeds 1.5, simplified method requires a stiffer structure.					
H/200	1	1	1.1	1.1	1.2	1.3	**1.4**/1.3	**1.5**/1.4			
H/300	1	1	1	1.1	1.1	1.2	1.2	1.3	**1.5**/1.4		
H/400	1	1	1	1.1	1.1	1.1	1.2	1.2	1.3	**1.4**/1.3	1.5
H/500	1	1	1	1	1.1	1.1	1.1	1.2	1.2	1.3	1.4

Note: Where two values are provided, the value in bold is the value associated with $R_m = 0.85$.

Commentary. For cases where no value is shown for the multiplier, the structure must be stiffened in order to use this simplified approach. Note that the multipliers are the same value for both $R_m = 0.85$ and 1.0 in most instances due to rounding. Where this is not the case, two values are given consistent with the two values of R_m, respectively.

Step 6: Ensure that the drift limit set in Step 2 is not exceeded and revise design as needed.

STABILITY BRACING

Beams, girders and trusses must be restrained against rotation about their longitudinal axes at points of support (a basic assumption stated in the General Provisions of AISC *Specification* Section F1). Additionally, stability bracing with adequate strength and stiffness must be provided consistent with that assumed at braced points in the analysis for frames, columns and beams (see AISC *Specification* Appendix 6). Some guidance for special cases follows.

Simple-Span Beams

In general, adequate lateral bracing is provided to the compression flange of a simple-span beam by the connections of infill beams, joists, concrete slabs, metal deck, concrete slabs on metal deck, and similar framing elements.

Beam Ends Supported on Bearing Plates

The stability of a beam end supported on a bearing plate can be provided in one of several ways (see Figure 2-1):

1. The beam end can be built into solid concrete or masonry using anchorage devices.
2. The beam top flange can be stabilized through interconnection with a floor or roof system, provided that system is itself anchored to prevent its translation relative to the beam bearing.

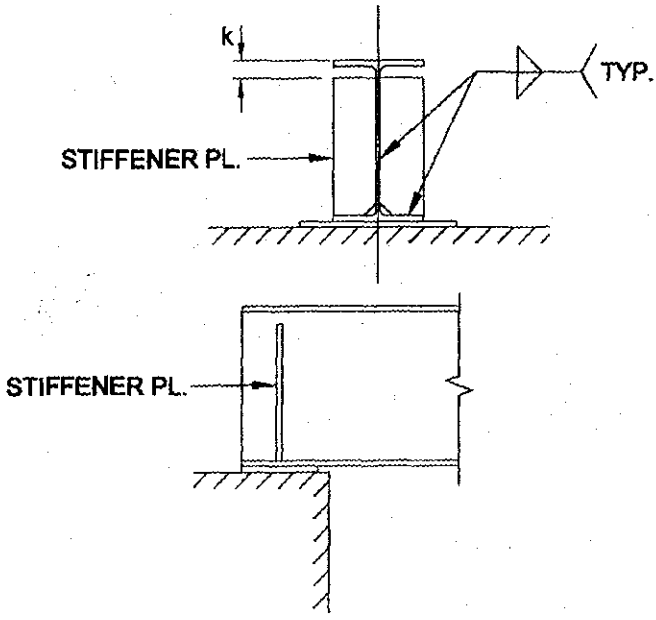

(a) Stability provided with transverse stiffeners

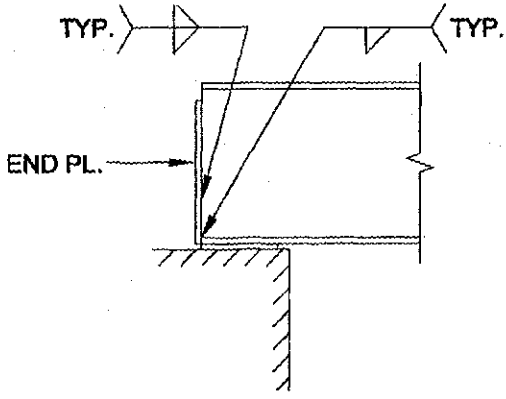

. (b) Stability provided with an end plate

ANCHOR BEAM AND/OR BEARING PL. AS REQUIRED

Fig. 2-1. Beam end supported on bearing plate.

3. A top-flange stability connection can be provided.
4. An end-plate or transverse stiffeners located over the bearing plate extending to near the top-flange *k*-distance can be provided. Such stiffeners must be welded to the top of the bottom flange and to the beam web, but need not extend to or be welded to the top flange.

In each case, the beam and bearing plate must also be anchored to the support. For the design of beam bearing plates, see Part 14.

In atypical framing situations, such as when very deep beams are used, the strength and stiffness requirements in AISC *Specification* Appendix 6 can be applied to ensure the stability of the assembly. It may also be possible to demonstrate in a limited number of cases, such as with beams with thick webs and relatively shallow depths, that the beam has been properly designed without providing the details described above. In this case, the beam and bearing plate must still be anchored to the support. In any case, it should be noted that the assembly must also meet the requirements in AISC *Specification* Section J10.

Beams and Girders Framing Continuously Over Columns

Roof framing is commonly configured with cantilevered beams that frame continuously over the tops of columns to support drop-in beams between the cantilevered segments (Rongoe, 1996; CISC, 1989). It is also commonly desirable to provide an assembly in which the intersection of the beam and column can be considered a braced point for the design of both the continuous cantilevering beam and the column top. The required stability can be provided in several ways (see Figure 2-2):

1. When an infill beam frames into the continuous beam at the column top, the required stability normally can be provided by using connection element(s) for the infill beam that cover three-quarters or more of the T-dimension of the continuous beam. Alternatively, connection elements that cover less than three-quarters of the T-dimension of the continuous beam can be used in conjunction with partial-depth stiffeners in the beam web along with a moment connection between the column top and beam bottom to maintain alignment of the beam/column assembly. A cap plate of reasonable proportions and four bolts will normally suffice.

   In either case, note that OSHA requires that, if two framing infill beams share common holes through a column web or the web of a beam that frames continuously over the top of a column,[3] the beam erected first must remain attached while connecting the second.
2. When joists frame into the continuous beam or girder, the required stability normally can be provided by using bottom chord extensions connected to the column top. The resulting continuity moments must be reported to the joist supplier for their use in the design of the joists and bridging. Note that the continuous beam must still be checked for the concentrated force due to the column reaction per AISC *Specification* Section J10.

[3] This requirement applies only at the location of the column, not at locations away from the column.

The position of the bottom chord extension relative to the column cap plate will affect the bottom chord connection detail. When the extension aligns with the cap plate, the load path and force transfer is direct. When the extension is below the column cap plate, the column must be designed to stabilize the beam bottom flange and the connection between the extension and the column must develop the continuity/brace force. When the extension is above the column top, the beam web must have the necessary strength and stiffness to adequately brace the beam bottom/column top.

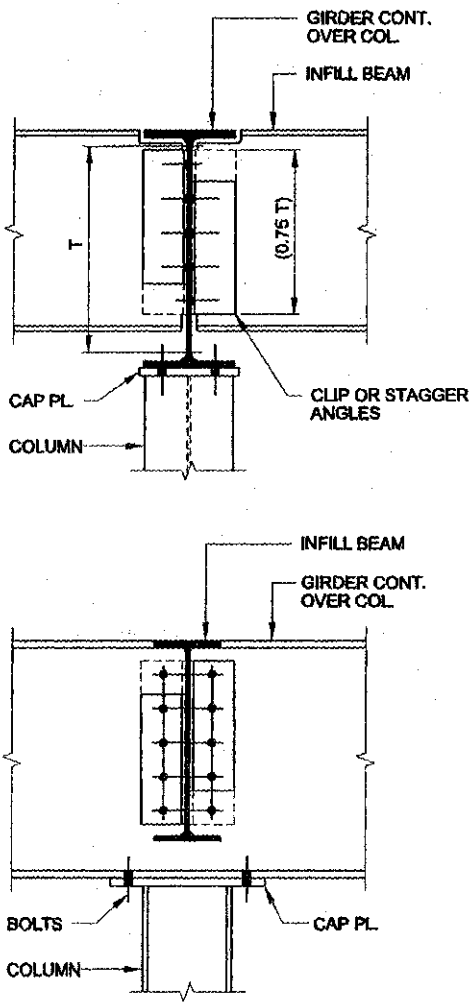

Fig. 2-2a. Beam framing continuously over column top, stability provided with connections of infill beams.

3. If connection of the joist bottom chord extensions to the column must be avoided, the required stability can be provided with a diagonal brace that satisfies the strength and stiffness requirements in AISC *Specification* Appendix 6. Providing a relatively shallow angle with respect to the horizontal can minimize gravity-load effects in the diagonal brace.

   Alternatively, the required stability can be provided with stiffeners in the beam web along with a moment connection between the column top and beam bottom to maintain alignment of the beam/column assembly. A cap plate of reasonable proportions and four bolts will normally suffice.

In atypical framing situations, such as when very deep girders are used, the strength and stiffness requirements in AISC *Specification* Appendix 6 can be applied for both the beam

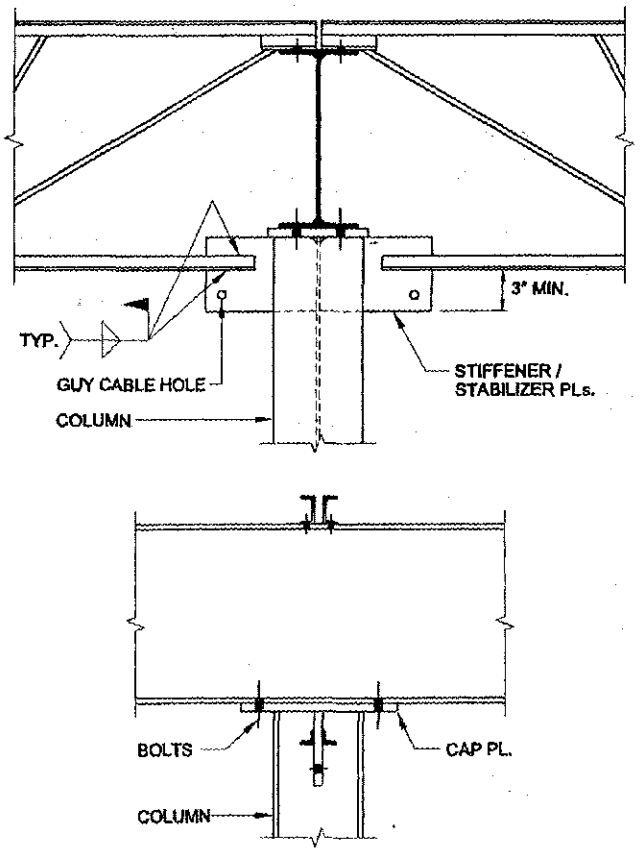

Fig. 2-2b. Beam framing continuously over column top, stability provided with welded joist-chord extensions at column top.

and the column to ensure the stability of the assembly. It may also be possible to demonstrate in a limited number of cases, such as with continuous beams with thick webs and relatively shallow depths, that the column and beam have been properly designed without providing infill beam connections, connected joist extensions, stiffeners, or diagonal braces as described above. In this case, a properly designed moment connection is still required between the beam bottom flange and the column top. In any case, it should be noted that the assembly must also meet the requirements in AISC *Specification* Section J10.

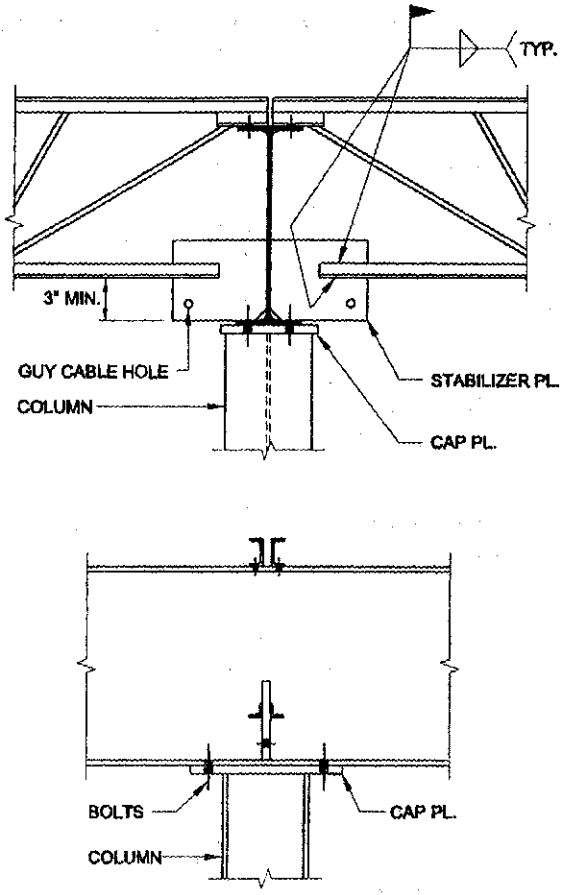

Fig. 2-2c. Beam framing continuously over column top, stability provided with welded joist-chord extensions above column top.

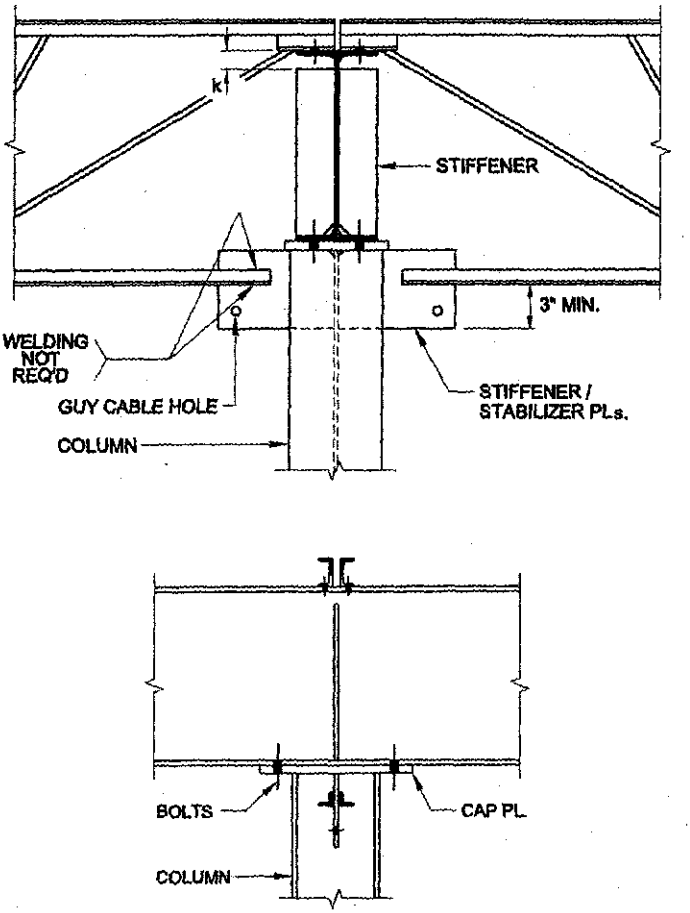

Fig. 2-2d. Beam framing continuously over column top, stability provided with transverse stiffeners, joist chord extensions located at column top not welded.

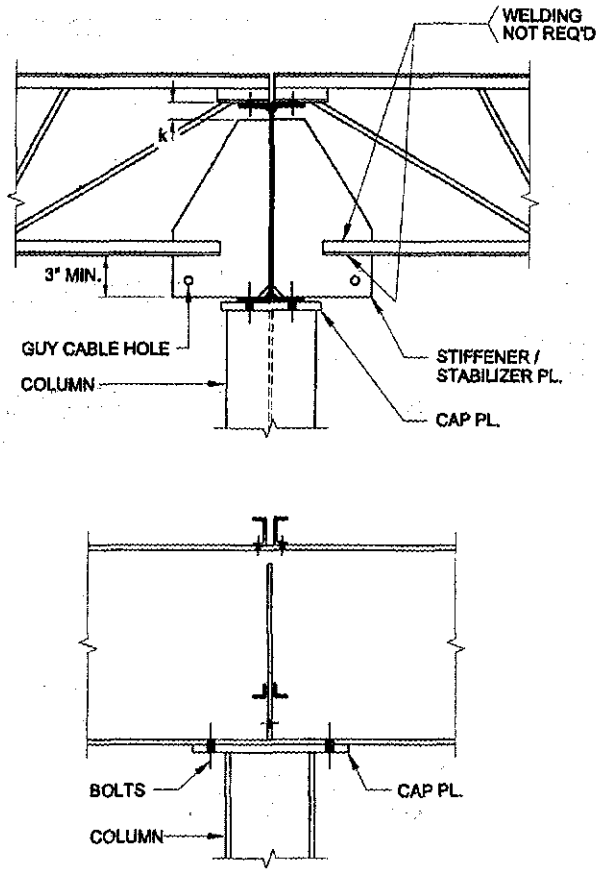

Fig. 2-2e. Beam framing continuously over column top, stability provided with stiffener plates, joist-chord extensions located above column top not welded.

PROPERLY SPECIFYING MATERIALS

Availability

The general availability of structural shapes, HSS and pipe can be determined by checking the AISC database of available structural steel shapes at **www.aisc.org/SteelAvailability**. Generally, where many producers are listed, it is an indication that the particular shape is commonly available. However, except for the larger shapes, when only one or two producers are listed, it is prudent to consider contacting a steel fabricator to determine availability.

Material Specifications

Applicable material specifications are as shown in the following tables:

- Structural shapes in Table 2-3
- Plate and bar products in Table 2-4
- Fastening products in Table 2-5

Preferred material specifications are indicated in black shading. Other applicable material specifications are as shown in grey shading. The availability of grades other than the preferred material specification should be confirmed prior to their specification.

Cross-sectional dimensions and production tolerances are addressed as indicated under "Standard Mill Practices" in Part 1.

Other Products

Anchor rods

Although the AISC *Specification* permits other materials for use as anchor rods, ASTM F1554 is the preferred specification, since all anchor rod production requirements are together in a single specification. ASTM F1554 provides three grades, namely 36 ksi, 55 ksi and 105 ksi. All Grade 36 rods are weldable. Grade 55 rods are weldable only when they are made per Supplementary Requirement S1. The project specifications must indicate if the material is to conform to Supplementary Requirement S1. As a heat-treated material, Grade 105 rods cannot be welded. Grade 105 should be used only for limited applications that require its high strength. For more information, refer to AISC Design Guide 1, *Base Plate and Anchor Rod Design* (Fisher and Kloiber, 2006).

Raised-Pattern Floor Plates

ASTM A786 is the standard specification for rolled steel floor plates. As floor-plate design is seldom controlled by strength considerations, ASTM A786 "commercial grade" is commonly specified. If so, per ASTM A786-05 Section 5.1.3, "the product will be supplied 0.33% maximum carbon by heat analysis, and without specified mechanical properties." Alternatively, if a defined strength level is desired, ASTM A786 raised-pattern floor plate can be ordered to a defined plate specification, such as ASTM A36, A572 or A588; see ASTM A786 Sections 5.1.3, 7.1 and 8.

Sheet and Strip

Sheet and strip products, which are generally thinner than structural plate and bar products are produced to such ASTM specifications as A570, A606 or A607 (see Table 2-3),

Filler Metal

The appropriate filler metal for structural steel is as summarized in ANSI/AWS D1.1: 2010 Table 3.1 for the various combinations of base metal specification and grade and electrode specification. Weld strengths in this Manual are based upon a tensile strength level of 70 ksi.

Steel Headed Stud Anchors

As specified in ANSI/AWS D1.1 Chapter 7 (Section 7.2.6 and Table 7.1), Type B shear stud connectors (referred to in the AISC *Specification* as steel headed stud anchors) made from ASTM A108 material are used for the interconnection of steel and concrete elements in composite construction ($F_u = 65$ ksi).

Open Web Steel Joists

The AISC *Code of Standard Practice* does not include steel joists in its definition of structural steel. Steel joists are designed and fabricated per the requirements of specifications published by the Steel Joist Institute. Refer to SJI literature for further information.

Castellated Beams

Castellated beams, also known as cellular beams, are members constructed by cutting along a staggered pattern down the web of a wide-flange member, offsetting the resulting pieces such that the deepest points of the cut are in contact, and welding the two pieces together, thereby creating a member with holes along its web. Castellated beams are currently designed and fabricated as a proprietary product. For more information, contact the manufacturer.

Steel Castings and Forgings

Steel castings are specified as ASTM A27 Grade 65-35 or ASTM A216 Grade 80-35. Steel forgings are specified as ASTM A668.

Forged Steel Structural Hardware

Forged steel structural hardware products, such as clevises, turnbuckles, eye nuts and sleeve nuts, are occasionally used in building design and construction. These products are generally forged according to ASTM A668 Class A requirements. ASTM A29, Grade 1035 material is commonly used in the manufacture of clevises and turnbuckles. ASTM A29, Grade 1030 material is commonly used in the manufacture of steel eye nuts and steel eye bolts. ASTM A29 Grade 1018 material is commonly used in the manufacture of sleeve nuts. Other products, such as steel rod ends, steel yoke ends and pins, cotter pins, and coupling nuts are commonly provided generically as "carbon steel."

The dimensional and strength characteristics of these devices are fully described in the literature provided by their manufacturer. Note that manufacturers usually provide strength characteristics in terms of a "safe working load" with a safety factor as high as 5, assuming

that the product will be used in rigging or similar applications subject to dynamic loading. The manufacturer's safe working load may be overly conservative for permanent installations and similar applications subject to static loading only.

If desired, the published safe working load can be converted into an available strength with reliability consistent with that of other statically loaded structural materials. In this case, the nominal strength, R_n is determined as:

$$R_n = (\textit{safe working load}) \times (\textit{manufacturer's safety factor}) \qquad (2\text{-}8)$$

and the available strength, ϕR_n or R_n/Ω, is determined using

$$\phi = 0.50 \text{ (LRFD)} \qquad \Omega = 3.00 \text{ (ASD)}$$

Crane Rails

Crane rails are furnished to ASTM A759, ASTM A1, and/or manufacturer's specifications and tolerances.

Most manufacturers chamfer the top and sides of the crane-rail head at the ends unless specified otherwise to reduce chipping of the running surfaces. Often, crane rails are ordered as end-hardened, which improves the resistance of the crane-rail ends to impact that occurs as the moving wheel contacts it during crane operation. Alternatively, the entire rail can be ordered as heat-treated. When maximum wheel loading or controlled cooling is needed, refer to manufacturers' catalogs. Purchase orders for crane rails should be noted "for crane service."

Light 40-lb rails are available in 30-ft lengths, 60-lb rails in 30-, 33- or 39-ft lengths, standard rails in 33- or 39-ft lengths and crane rails up to 80 ft. Consult manufacturer for availability of other lengths. Rails should be arranged so that joints on opposite sides of the crane runway will be staggered with respect to each other and with due consideration to the wheelbase of the crane. Rail joints should not occur at crane girder splices. Odd lengths that must be included to complete a run or obtain the necessary stagger should be not less than 10 ft long. Rails are furnished with standard drilling in both standard and odd lengths unless stipulated otherwise on the order.

CONTRACT DOCUMENT INFORMATION

Design Drawings, Specifications and Other Contract Documents

CASE Document 962D, *A Guideline Addressing Coordination and Completeness of Structural Construction Documents* (CASE, 2003), provides comprehensive guidance on the preparation of structural design drawings.

Most provisions in the AISC *Specification*, RCSC *Specification*, AWS D1.1, and the AISC *Code of Standard Practice* are written in mandatory language. Some provisions require the communication of information in the contract documents, some provisions are invoked only when specified in the contract documents, and some provisions require the approval of the owner's designated representative for design if they are to be used. Following is a summary of these provisions in the AISC *Specification*, RCSC *Specification*, and AISC *Code of Standard Practice*.

Required Information

The following communication of information is required in the contract documents:

1. Required drawing information, per AISC *Code of Standard Practice* Sections 3.1 and 3.1.1 through 3.1.6. and RCSC *Specification* Section 1.4 (bolting products and joint type)
2. Drawing numbers and revision numbers, per AISC *Code of Standard Practice* Section 3.5
3. Structural system description, per AISC *Code of Standard Practice* Section 7.10.1
4. Installation schedule for nonstructural steel elements in the structural system, per AISC *Code of Standard Practice* Section 7.10.2
5. Project schedule, per AISC *Code of Standard Practice* Section 9.5.1

Information Required Only When Specified

The following provisions are invoked only when specified in the contract documents:

1. Special material notch-toughness requirements, per AISC *Specification* Section A3.1c and Section A3.1d
2. Special connections requiring pretension, per AISC *Specification* Section J1.10
3. Bolted joint requirements, per AISC *Specification* Section J3.1 and RCSC *Specification* Section 1.4
4. Special cambering considerations, per AISC *Specification* Section L2
5. Special contours and finishing requirements for thermal cutting, per AISC *Specification* Sections M2.2 and M2.3, respectively
6. Corrosion protection requirements, if any, per AISC *Specification* Section M3 and AISC *Code of Standard Practice* Sections 6.5, 6.5.2 and 6.5.3
7. Responsibility for field touch-up painting, if painting is specified, per AISC *Specification* Section M4.6 and AISC *Code of Standard Practice* Section 6.5.4
8. Special quality control and inspection requirements, per AISC *Specification* Chapter N and AISC *Code of Standard Practice* Sections 8.1.3, 8.2 and 8.3
9. Evaluation procedures, per AISC *Specification* Section B6
10. Fatigue requirements, if any, per AISC *Specification* Section B3.9
11. Tolerance requirements other than those specified in the AISC *Code of Standard Practice*, per *Code of Standard Practice* Section 1.9
12. Designation of each connection as Option 1, 2 or 3, and identification of requirements for substantiating connection information, if any, per AISC *Code of Standard Practice* Section 3.1.2
13. Specific instructions to address items differently, if any, from requirements in the AISC *Code of Standard Practice*, per *Code of Standard Practice* Section 1.1
14. Submittal schedule for shop and erection drawings, per AISC *Code of Standard Practice* Section 4.2
15. Mill order timing, special mill testing, and special mill tolerances, per AISC *Code of Standard Practice* Sections 5.1, 5.2 and 5.2, respectively
16. Removal of backing bars and runoff tabs, per AISC *Code of Standard Practice* Section 6.3.2
17. Special erection mark requirements, per AISC *Code of Standard Practice* Section 6.6.1

18. Special delivery and erection sequences, per AISC *Code of Standard Practice* Sections 6.7.1 and 7.1, respectively
19. Special field splice requirements, per AISC *Code of Standard Practice* Section 6.7.4
20. Specials loads to be considered during erection, per AISC *Code of Standard Practice* Section 7.10.3
21. Special safety protection treatments, per AISC *Code of Standard Practice* Section 7.11.1
22. Identification of adjustable items, per AISC *Code of Standard Practice* Section 7.13.1.3
23. Cuts, alterations and holes for other trades, per AISC *Code of Standard Practice* Section 7.15
24. Revisions to the contract, per AISC *Code of Standard Practice* Section 9.3
25. Special terms of payment, per AISC *Code of Standard Practice* Section 9.6
26. Identification of architecturally exposed structural steel, per AISC *Code of Standard Practice* Section 10

Approvals Required

The following provisions require the approval of the owner's designated representative for design if they are to be used:

1. Bolted-joint-related approvals per RCSC *Specification* Commentary Section 1.4
2. Use of electronic or other copies of the design drawings by the fabricator, per AISC *Code of Standard Practice* Section 4.3
3. Use of stock materials not conforming to a specified ASTM specification, per AISC *Code of Standard Practice* Section 5.2.3
4. Correction of errors, per AISC *Code of Standard Practice* Section 7.14
5. Inspector-recommended deviations from contract documents, per AISC *Code of Standard Practice* Section 8.5.6
6. Contract price adjustment, per AISC *Code of Standard Practice* Section 9.4.2

Establishing Criteria for Connections

AISC *Code of Standard Practice* Section 3.1.2 provides the following three methods for the establishment of connection requirements.

In the first method, the complete design of all connections is shown in the structural design drawings. In this case, AISC *Code of Standard Practice* Commentary Section 3.1.2 provides a summary of the information that must be included in the structural design drawings. This method has the advantage that there is no need to provide connection loads, since the connections are completely designed in the structural design drawings. Additionally, it favors greater accuracy in the bidding process, since the connections are fully described in the contract documents.

In the second method, the fabricator is allowed to select or complete the connections while preparing the shop and erection drawings, using the information provided by the owner's designated representative for design per AISC *Code of Standard Practice* Section 3.1.2. In this case, AISC *Code of Standard Practice* Commentary Section 3.1.2 clarifies the intention that connections that can be selected or completed by the fabricator include those for which tables appear in the contract documents or the Manual. Other connections should be shown in detail in the structural design drawings.

In the third method, connections are designated in the contract documents to be designed by a licensed professional engineer working for the fabricator. The AISC *Code of Standard Practice* sets forth detailed provisions that, in the absence of contract provisions to the contrary, serve as the basis of the relationships among the parties. One feature of these provisions is that the fabricator is required to provide representative examples of connection design documentation early in the process, and the owner's designated representative for design is obliged is to review these submittals for conformity with the requirements of the contract documents. These early submittals are required in an attempt to avoid additional costs and/or delays as the approval process proceeds through subsequent shop drawings with connections developed from the original representative samples.

Methods one and two have the advantage that the fabricator's standard connections normally can be used, which often leads to project economy. However, the loads or other connection design criteria must be provided in the structural design drawings. Design loads and required strengths for connections should be provided in the structural design drawings and the design method used in the design of the frame (ASD or LRFD) must be indicated on the drawings.

In all three methods, the resulting shop and erection drawings must be submitted to the owner's designated representative for design for review and approval. As stated in the AISC *Code of Standard Practice* Section 4.4.1, the approval of shop and erection drawings constitutes "confirmation that the Fabricator has correctly interpreted the Contract Documents" and that the reviewer has "reviewed and approved the Connection details shown in the Shop and Erection Drawings." Following is additional guidance for the communication of connection criteria to the connection designer.

Simple Shear Connections

The full force envelope should be given for each simple shear connection. Because of the potential for overestimation and underestimation inherent in approximate methods (Thornton, 1995), actual beam end reactions should be indicated on the design drawings. The most effective method to communicate this information is to place a numeric value at each end of each span in the framing plans.

In the past, beam end reactions were sometimes specified as a percentage of the tabulated uniform load in Manual Part 3. This practice can result in either over- or under-specification of connection reactions and should not be used. The inappropriateness of this practice is illustrated in the following examples.

Over-estimation:

1. When beams are selected for serviceability considerations or for shape repetition, the uniform load tables will often result in heavier connections than would be required by the actual design loads.
2. When beams have relatively short spans, the uniform load tables will often result in heavier connections than would be required by the actual design loads. If not addressed with the accurate load, many times the heavier connections will require extension of the connection below the bottom flange of the supported member, requiring that the flange on one or both sides of the web to be cut and chipped, a costly process.

Under-estimation:

1. When beams support other framing beams or other concentrated loads occur on girders supporting beams, the end reactions can be higher than 50% of the total uniform load.
2. For composite beams, the end reactions can be higher than 50% of the total uniform load. The percentage requirement can be increased for this condition, but the resulting approach is still subject to the above considerations.

Moment Connections

The full force envelope should be given for each moment connection. If the owner's designated representative for design can select the governing load combination, its effect alone should be provided. Otherwise, the effects of all appropriate load combinations should be indicated. Additionally, the maximum moment imbalance should also be given for use in the check of panel-zone web shear.

Because of the potential for overestimation—and underestimation—inherent in approximate methods, it is recommended that the actual beam end reactions (moment, shear and other reactions, if any) be indicated in the structural design drawings. The most effective method to do so may be by tabulation for each joint and load combination.

Although not recommended, beam end reactions are sometimes specified by more general criteria, such as by function of the beam strength. It should be noted, however, that there are several situations in which this approach is not appropriate. For example:

1. When beams are selected for serviceability considerations or for shape repetition, this approach will often result in heavier connections than would be required by the actual design loads.
2. When the column(s) or other members that frame at the joint could not resist the forces and moments determined from the criteria so specified, this approach will often result in heavier connections than would be required by the actual design loads.

In some cases, the structural analysis may require that the actual connections be configured to match the assumptions used in the model. For example, it may be appropriate to release weak-axis moments in a beam-column joint where only strong-axis beam moment strength is required. Such requirements should be indicated in the structural design drawings.

Horizontal and Vertical Bracing Connections

The full force envelope should be given for each bracing-member end connection. If the owner's designated representative for design can select the governing load combination for the connection, its effect alone should be provided. Otherwise, the effects of all appropriate load combinations should be indicated in tabular form. This approach will allow a clear understanding of all of the forces on any given joint.

Because of the potential for overestimation—and underestimation—inherent in approximate methods, it is recommended that the actual reactions at the bracing member end (axial force and other reactions, if any) be indicated in the structural design drawings. It is also recommended that transfer forces, if any, be so indicated. The most effective method to do so may be by tabulation for each bracing member end and load combination.

Although not recommended, bracing member end reactions can be specified by more general criteria, such as by maximum member forces (tension or compression) or as a function of the member strength. It should be noted, however, that there are several situations in which such approaches are not appropriate. For example:

1. The specification of maximum member forces does not permit a check of the member forces at a joint if there are different load combinations governing the member designs at that joint. Nor does it reflect the possibility of load reversal as it may influence the design.
2. The specification of a percentage of member strength may not properly account for the interaction of forces at a joint or the transfer force through the joint. Additionally, it may not allow for a cross-check of all forces at a joint.

In either case, this approach will often result in heavier connections than would be required by the actual design loads.

Bracing connections may involve the interaction of gravity and lateral loads on the frame. In some cases, such as V- and inverted V-bracing (also known as Chevron bracing), gravity loads alone may govern design of the braces and their connections. Thus, clarity in the specification of loads and reactions is critical to properly consider the potential interaction of gravity and lateral loads at floors and roofs.

Strut and Tie Connections

Floor and roof members in braced bays and adjacent bays may function as struts or ties in addition to carrying gravity loads. Therefore the recommendations for simple shear connections and bracing connections above apply in combination.

Truss Connections

The recommendations for horizontal and vertical bracing connections above also apply in general to bracing connections with the following additional comments.

Note that it is not necessary to specify a minimum connection strength as a percent of the member strength as a default. However, when trusses are shop assembled or field assembled on the ground for subsequent erection, consideration should be given to the loads that will be induced during handling, shipping and erection.

Column Splices

Column splices may resist moments, shears and tensions in addition to gravity forces. Typical column splices are discussed in Part 14. As in the case of the other connections discussed above, unless the column splices are fully designed in the construction documents, forces and moments for the splice designs should be provided in the construction documents. Since column splices are located away from the girder/column joint and moments vary in the height of the column, an accurate assessment of the forces and moments at the column splices will usually significantly reduce their cost and complexity.

CONSTRUCTABILITY

Constructability is a relatively new word for a well established idea. The design, detailing, fabrication and erection of structural steel is a process which in the end needs to result in a safe and economical steel frame. Building codes and the AISC *Specification* address strength and

structural integrity. Constructability addresses the need for global economy in the fabricated and erected steel frame. Constructability must be "designed in," influencing decision making at all steps of the design process, from framing system selection, though member design, to connection selection and design. Constructability demands attention to detail and requires the designer to think ahead to the fabrication and erection of the steel frame. The goal is to design a steel frame that is relatively easy to detail, fabricate and erect. AISC provides guidance to the design community through its many publications and presentations, including the recently published Design Guide 23, *Constructability of Structural Steel Buildings* (Ruby, 2008).

Constructability focuses on such issues as framing layout, the number of pieces in an area of framing, three-dimensional connection geometry, swinging in clearances, access to bolts, and access to welds. It involves the acknowledgement that numerous, seemingly small decisions can have an effect on the overall economy of the final erected steel frame. Fabricators and erectors have the knowledge that can assist in the design of constructible steel frames. Designers should seek their counsel.

TOLERANCES

The effects of mill, fabrication and erection tolerances all require consideration in the design and construction of structural steel buildings. However, the accumulation of the mill tolerances and fabrication tolerances shall not cause the erection tolerances to be exceeded, per AISC *Code of Standard Practice* Section 7.12.

Mill Tolerances

Mill tolerances are those variations that could be present in the product as-delivered from the rolling mill. These tolerances are given as follows:

1. For structural shapes and plates, see ASTM A6.
2. For HSS, see ASTM A500 (or other applicable ASTM specification for HSS).
3. For pipe, see ASTM A53.

A summary of standard mill practices is also given in Part 1.

Fabrication Tolerances

Fabrication tolerances are generally provided in AISC *Specification* Section M2 and AISC *Code of Standard Practice* Section 6.4. Additional requirements that govern fabrication are as follows:

1. Compression joint fit-up, per AISC *Specification* Section M4.4
2. Roughness limits for finished surfaces, per AISC *Code of Standard Practice* Section 6.2.2
3. Straightness of projecting elements of connection materials, per AISC *Code of Standard Practice* Section 6.3.1
4. Finishing requirements at locations of removal of run-off tabs and similar devices, per AISC *Code of Standard Practice* Section 6.3.2

Erection Tolerances

Erection tolerances are generally provided in AISC *Specification* Section M4 and AISC *Code of Standard Practice* Section 7.13. Note that the tolerances specified therein are

predicated upon the proper installation of the following items by the owner's designated representative for construction:

1. Building lines and benchmarks, per AISC *Code of Standard Practice* Section 7.4
2. Anchorage devices, per AISC *Code of Standard Practice* Section 7.5
3. Bearing devices, per AISC *Code of Standard Practice* Section 7.6
4. Grout, per AISC *Code of Standard Practice* Section 7.7

Building Façade Tolerances

The preceding mill, fabrication and erection tolerances can be maintained with standard equipment and workmanship. However, the accumulated tolerances for the structural steel and the building façade must be accounted for in the design so that the two systems can be properly mated in the field. In the steel frame, this is normally accomplished by specifying adjustable connections in the contract documents, per AISC *Code of Standard Practice* Section 7.13.1.3. This section has three subsections. Subsection (a) addresses the vertical position of the adjustable items, subsection (b) addresses the horizontal position of the adjustable items, and subsection (c) addresses alignment of adjustable items at abutting ends.

The required adjustability normally can be determined from the range of adjustment in the building façade anchor connections, tolerances for the erection of the building façade, and the accumulation of mill, fabrication and erection tolerances at the mid-span point of the spandrel beam. The actual locations of the column bases, the actual slope of the columns and the actual sweep of the spandrel beam all affect the accumulation of tolerances in the structural steel at this critical location. These conditions must be reflected in details that will allow successful erection of the steel frame and the façade, if each of these systems is properly constructed within its permitted tolerance envelope.

Figures 2-3a, 2-4a and 2-5a illustrate details that are not recommended because they do not provide for adjustment. Figures 2-3b, 2-4b and 2-5b illustrate recommended alternative details that do provide for adjustability. Note that diagonal structural and stability bracing elements have been omitted in these details to improve the clarity of presentation regarding adjustability. Also, note that all elements beyond the slab edge are normally not structural steel, per AISC *Code of Standard Practice* Section 2.2, and are shown for the purposes of illustration only.

The bolted details in Figures 2-4b and 2-5b can be used to provide field adjustability with slotted holes as shown. Further adjustability can be provided in these details, if necessary, by removing the bolts and clamping the connection elements for field welding. Alternatively, when the slab edge angle or plate in Figure 2-4b is shown as field welded and identified as adjustable in the contract documents, it can be provided to within a horizontal tolerance of $\pm 3/8$ in., per AISC *Code of Standard Practice* Section 7.13.1.3. However, if the item was not shown as field welded and identified as adjustable in the contract documents, it would likely be attached in the shop or attached in the field to facilitate the concrete pour and not be suitable to provide for the necessary adjustment. The details in Figures 2-3b and 2-4b do not readily permit vertical adjustment of the adjustable material. However, the vertical position tolerance of $\pm 3/8$ in. is less than the tolerance for the position of the spandrel member itself, see AISC *Code of Standard Practice* Section 7.13.1.2(b). The manufacturing tolerance for camber in the spandrel member is set by ASTM A6, as summarized in Table 1-22. The ASTM A6 limit for camber is $1/8$ in. per 10 ft of length, thus, in most situations

the vertical position tolerance in AISC *Code of Standard Practice* Section 7.13.1.3(b) should be achieved indirectly. In general, spandrel members should not be cambered. Deflection of spandrel members should be controlled by member stiffness. Figure 2-5b shows a detail in which both horizontal and vertical adjustment can be achieved.

With adjustable connections specified in design and provided in fabrication, actions taken on the job site will allow for a successful façade installation. Per the AISC *Code of Standard Practice* definition of established column line (see *Code of Standard Practice* Glossary),

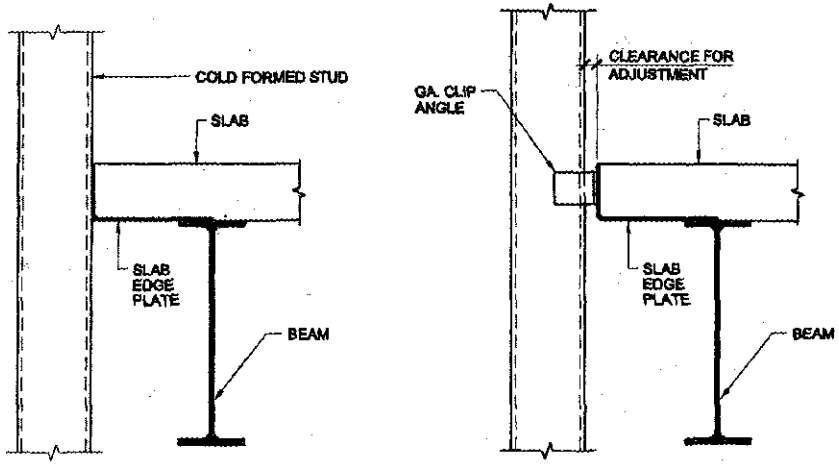

(a) Without adjustment (not recommended)

(b) With adjustment (recommended)

Fig. 2-3. Attaching cold-formed steel façade systems to structural steel framing.

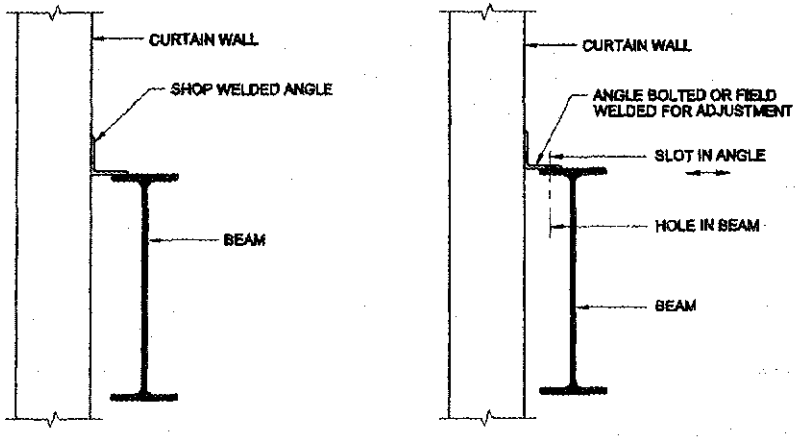

(a) Without adjustment (not recommended)

(b) With adjustment (recommended)

Fig. 2-4. Attaching curtain wall façade systems to structural steel framing.

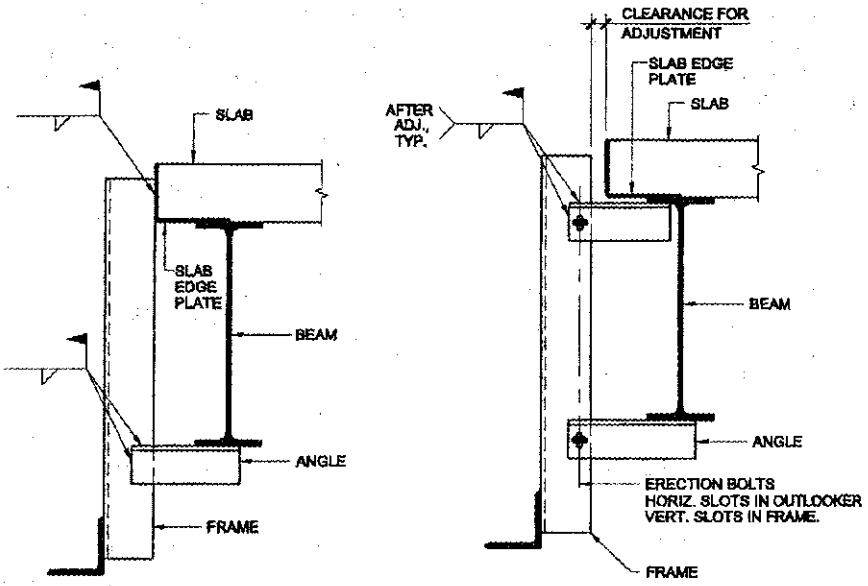

(a) Without adjustment (not recommended)

(b) With adjustment (recommended)

Fig. 2-5. Attaching masonry façade systems to structural steel framing.

proper placement of this line by the owner's designated representative for construction based upon the actual column-center locations will assure that all subcontractors are working from the same information. When sufficient adjustment cannot be accommodated within the adjustable connections provided, a common solution is to allow the building façade to deviate (or drift) from the theoretical location to follow the as-built locations of the structural steel framing and concrete floor slabs. A survey of the as-built locations of these elements can be used to adjust the placement of the building façade accordingly. In this case, the adjustable connections can serve to ensure that no abrupt changes occur in the façade.

QUALITY CONTROL AND QUALITY ASSURANCE

Prior to 2010, quality control and quality assurance were addressed in the contract documents, Chapter M of the AISC *Specification*, and building codes. In the 2010 AISC *Specification*, Chapter N, entitled Quality Control and Quality Assurance, has been added. This chapter distinguishes between quality control, which is the responsibility of the fabricator and erector, and quality assurance, which is the responsibility of the owner, usually through third party inspectors. The new provisions bring together requirements from diverse sources of quality control (QC) and quality assurance (QA), so that plans for QC and QA can be established on a project specific basis. Chapter N provides tabulated lists of inspection tasks for both QC and QA. As in the case of the AISC *Seismic Provisions*, these tasks are characterized as either "observe" or "perform." Tasks identified as "observe" are general and random. Tasks identified as "perform" are specific to the final acceptance of an item in the work. The characterization of tasks as observe and perform is a substitute for the

distinction between periodic and continuous inspection used in other codes and standards, such as the *International Building Code*.

CAMBERING, CURVING AND STRAIGHTENING

Beam Camber and Sweep

Camber denotes a curve in the vertical plane. Sweep denotes a curve in the horizontal plane. Camber and sweep occur naturally in members as received from the mill. The deviation of the member from straight must be within the mill tolerances specified in ASTM A6/A6M.

When required by the contract documents, cambering and curving to a specified amount can be provided by the fabricator per AISC *Code of Standard Practice* Sections 6.4.2 and 6.4.4, either by cold bending or by hot bending.

Cambering and curving induce residual stresses similar to those that develop in rolled structural shapes as elements of the shape cool from the rolling temperature at different rates. These residual stresses do not affect the available strength of structural members, since the effect of residual stresses is considered in the provisions of the AISC *Specification*.

Cold Bending

The inelastic deformations required in common cold bending operations, such as for beam cambering, normally fall well short of the strain-hardening range. Specific limitations on cold-bending capabilities should be obtained from those that provide the service and from *Cold Bending of Wide-Flange Shapes for Construction* (Bjorhovde, 2006). However, the following general guidelines may be useful in the absence of other information:

1. The minimum radius for camber induced by cold bending in members up to a nominal depth of 30 in. is between 10 and 14 times the depth of the member. Deeper members may require a larger minimum radius.
2. Cold bending may be used to provide curving in members to practically any radius desired.
3. A minimum length of 25 ft is commonly practical due to manufacturing/fabrication equipment.

When curvatures and the resulting inelastic deformations are significant and corrective measures are required, the effects of cold work on the strength and ductility of the structural steels largely can be eliminated by thermal stress relief or annealing.

Hot Bending

The controlled application of heat can be used in the shop and field to provide camber or curvature. The member is rapidly heated in selected areas that tend to expand, but are restrained by the adjacent cooler areas, causing inelastic deformations in the heated areas and a change in the shape of the cooled member.

The mechanical properties of steels are largely unaffected by such heating operations, provided the maximum temperature does not exceed the temperature limitations given in AISC *Specification* Section M2.1. Temperature-indicating crayons or other suitable means should be used during the heating process to ensure proper regulation of the temperature.

Heat curving induces residual stresses that are similar to those that develop in hot-rolled structural shapes as they cool from the rolling temperature because all parts of the shape do not cool at the same rate.

Truss Camber

Camber is provided in trusses, when required, by the fabricator per AISC *Code of Standard Practice* Section 6.4.5, by geometric relocation of panel points and adjustment of member lengths based upon the camber requirements as specified in the contract documents.

Straightening

All structural shapes are straightened at the mill after rolling, either by rotary or gag straightening, to meet the aforementioned mill tolerances. Similar processes and/or the controlled application of heat can be used in the shop or field to straighten a curved or distorted member. These processes are normally applied in a manner similar to those used to induce camber and curvature and described above.

FIRE PROTECTION AND ENGINEERING

Provisions for structural design for fire conditions are found in Appendix 4 of the AISC *Specification*. Complete coverage of fire protection and engineering for steel structures is included in AISC Design Guide 19, *Fire Resistance of Structural Steel Framing* (Ruddy et al., 2003).

CORROSION PROTECTION

In building structures, corrosion protection is not required for steel that will be enclosed by building finish, coated with a contact-type fireproofing, or in contact with concrete. When enclosed, the steel is trapped in a controlled environment and the products required for corrosion are quickly exhausted, as indicated in AISC *Specification* Commentary Section M3. A similar situation exists when steel is fireproofed or in contact with concrete. Accordingly, shop primer or paint is not required unless specified in the contract documents, per AISC *Specification* Section M3.1. Per AISC *Code of Standard Practice* Section 6.5, steel that is to remain unpainted need only be cleaned of heavy deposits of oil and grease by appropriate means after fabrication.

Corrosion protection is required, however, in exterior exposed applications. Likewise, steel must be protected from corrosion in aggressively corrosive applications, such as a paper processing plant, a structure with oceanfront exposure, or when temperature changes can cause condensation. Corrosion should also be considered when connecting steel to dissimilar metals. Guidance on steel compatibility with metal fasteners is provided in Table 2-7.

When surface preparation other than the cleaning described above is required, an appropriate grade of cleaning should be specified in the contract documents according to the Society for Protective Coatings (SSPC). A summary of the SSPC surface preparation specifications (SSPC, 2000) is provided in Table 2-8. SSPC SP 2 is the normal grade of cleaning when cleaning is required.

For further information, refer to the publications of SSPC, the American Galvanizers Association (AGA), and the National Association of Corrosion Engineers International (NACE).

RENOVATION AND RETROFIT OF EXISTING STRUCTURES

The provisions in AISC *Specification* Section B6 govern the evaluation of existing structures. Historical data on available steel grades and hot-rolled structural shapes, including

dimensions and properties, is available in AISC Design Guide 15, *Rehabilitation and Retrofit Guide* (Brockenbrough, 2002) and the companion database of historic shape properties from 1873-1999 **available at www.aisc.org**. See also Ricker (1988) and Tide (1990).

THERMAL EFFECTS

Expansion and Contraction

The average coefficient of expansion, ε, for structural steel between 70 °F and 100 °F is 0.0000065 for each °F (Camp et al., 1951). This value is a reasonable approximation of the coefficient of thermal expansion for temperatures less than 70 °F. For temperatures from 100 to 1,200 °F, the change in length per unit length per °F, ε, is:

$$\varepsilon = (6.1 + 0.0019t)10^{-6} \qquad (2\text{-}9)$$

where t is the initial temperature in °F. The coefficients of expansion for other building materials can be found in Table 17-10.

Although buildings are typically constructed of flexible materials, expansion joints are often required in roofs and the supporting structure when horizontal dimensions are large. The maximum distance between expansion joints is dependent upon many variables, including ambient temperature during construction and the expected temperature range during the lifetime of the building.

Figure 2-6 (Federal Construction Council, 1974) provides guidance based on design temperature change for maximum spacing of structural expansion joints in beam-and-column-framed buildings with pinned column bases and heated interiors. The report includes data for numerous cities and gives five modification factors to be applied as appropriate:

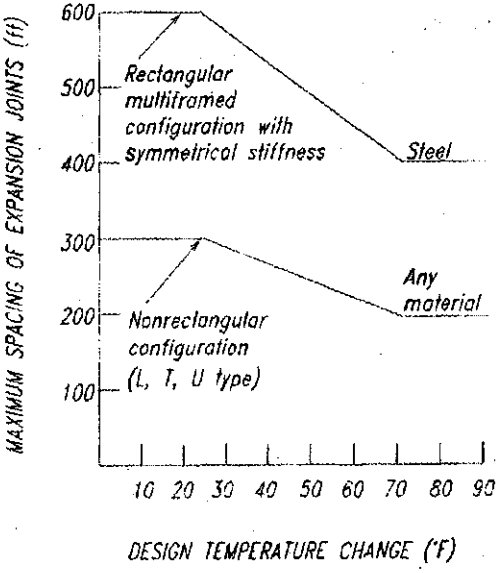

Fig. 2-6. Recommended maximum expansion-joint spacing.

1. If the building will be heated only and will have pinned column bases, use the maximum spacing as specified.
2. If the building will be air-conditioned as well as heated, increase the maximum spacing by 15% provided the environmental control system will run continuously.
3. If the building will be unheated, decrease the maximum spacing by 33%.
4. If the building will have fixed column bases, decrease the maximum spacing by 15%.
5. If the building will have substantially greater stiffness against lateral displacement in one of the plan dimensions, decrease the maximum spacing by 25%.

When more than one of these design conditions prevail in a building, the percentile factor to be applied is the algebraic sum of the adjustment factors of all the various applicable conditions. Most building codes include restrictions on location and maximum spacing of fire walls, which often become default locations for expansion joints.

The most effective expansion joint is a double line of columns that provides a complete and positive separation. Alternatively, low-friction sliding elements can be used. Such systems, however, are seldom totally friction-free and will induce some level of inherent restraint to movement.

Elevated-Temperature Service

For applications involving short-duration loading at elevated temperature, the variations in yield strength, tensile strength, and modulus of elasticity are given in AISC Design Guide 19, *Fire Resistance of Structural Steel Framing* (Ruddy et al., 2003). For applications involving long-duration loading at elevated temperatures, the effects of creep must also be considered. For further information, see Brockenbrough and Merritt (1999; pp. 1.20–1.22).

FATIGUE AND FRACTURE CONTROL

Avoiding Brittle Fracture

By definition, brittle fracture occurs by cleavage at a stress level below the yield strength. Generally, a brittle fracture can occur when there is a sufficiently adverse combination of tensile stress, temperature, strain rate and geometrical discontinuity (notch). The exact combination of these conditions and other factors that will cause brittle fracture cannot be readily calculated. Consequently, the best guide in selecting steel material that is appropriate for a given application is experience.

The steels listed in AISC *Specification* Section A3.1a, Section A3.1c and Section A3.1d have been successfully used in a great number of applications, including buildings, bridges, transmission towers and transportation equipment, even at the lowest atmospheric temperatures encountered in the United States. Nonetheless, it is desirable to minimize the conditions that tend to cause brittle fracture: triaxial state-of-stress, increased strain rate, strain aging, stress risers, welding residual stresses, areas of reduced notch toughness, and low-temperature service.

1. Triaxial state-of-stress: While shear stresses are always present in a uniaxial or biaxial state-of-stress, the maximum shear stress approaches zero as the principal stresses approach a common value in a triaxial state-of-stress. A triaxial state-of-stress can also result from uniaxial loading when notches or geometrical discontinuities are present. A triaxial state-of-stress will cause the yield stress of the material to increase above its

nominal value, resulting in brittle fracture by cleavage, rather than ductile shear deformations. As a result, in the absence of critical-size notches, the maximum stress is limited by the yield stress of the nearby unaffected material. Triaxial stress conditions should be avoided, when possible.

2. Increased strain rate: Gravity loads, wind loads and seismic loads have essentially similar strain rates. Impact loads, such as those associated with heavy cranes, and blast loads normally have increased strain rates, which tend to increase the possibility of brittle fracture. Note, however, that a rapid strain rate or impact load is not a required condition for the occurrence of brittle fracture.
3. Strain aging: Cold working of steel and the strain aging that normally results generally increases the likelihood of brittle fracture, usually due to a reduction in ductility and notch toughness. The effects of cold work and strain aging can be minimized by selecting a generous forming radius to eliminate or minimize strain hardening.
4. Stress risers: Fabrication operations, such as flame cutting and welding, may induce geometric conditions or discontinuities that are crack-like in nature, creating stress risers. Intersecting welds from multiple directions should be avoided with properly sized weld access holes to minimize the interaction of these various stress fields. Such conditions should be avoided, when possible, or removed or repaired when they occur.
5. Welding residual stresses: In the as-welded condition, residual stresses near the yield strength of the material will be present in any weldment. Residual stresses and the possible accompanying distortions can be minimized through controlled welding procedures and fabrication methods, including the proper positioning of the components of the joint prior to welding, the selection of welding sequences that will minimize distortions, the use of preheat as appropriate, the deposition of a minimum volume of weld metal with a minimum number of passes for the design condition, and proper control of interpass temperatures and cooling rates. In fracture-sensitive applications, notch-toughness should be specified for both the base metal and the filler metal.
6. Areas of reduced notch toughness: Such areas can be found in the core areas of heavy shapes and plates and the *k*-area of rotary-straightened W-shapes. Accordingly, AISC *Specification* Sections A3.1c and Section A3.1d include special requirements for material notch toughness.
7. Low-temperature service: While steel yield strength, tensile strength, modulus of elasticity, and fatigue strength increase as temperature decreases, ductility and toughness decrease. Furthermore, there is a temperature below which steel subjected to tensile stress may fracture by cleavage, with little or no plastic deformation, rather than by shear, which is usually preceded by considerable inelastic deformation. Note that cleavage and shear are used in the metallurgical sense to denote different fracture mechanisms.

When notch-toughness is important, Charpy V-notch testing can be specified to ensure a certain level of energy absorption at a given temperature, such as 15 ft-lb at 70 °F. Note that the appropriate test temperature may be higher than the lowest operating temperature depending upon the rate of loading. Although it is primarily intended for bridge-related applications, the information in ASTM A709 Section S83 (including Tables S1.1, S1.2 and S1.3) may be useful in determining the proper level of notch toughness that should be specified.

In many cases, weld metal notch toughness exceeds that of the base metal. Filler metals can be selected to meet a desired minimum notch-toughness value. For each welding

process, electrodes exist that have no specified notch toughness requirements. Such electrodes should not be assumed to possess any minimum notch-toughness value. When notch toughness is necessary for a given application, the desired value or an appropriate electrode should be specified in the contract documents.

For further information, refer to Fisher et al. (1998), Barsom and Rolfe (1999), and Rolfe (1977).

Avoiding Lamellar Tearing

Although lamellar tearing is less common today, the restraint against solidified weld deposit contraction inherent in some joint configurations can impose a tensile strain high enough to cause separation or tearing on planes parallel to the rolled surface of the element being joined. The incidence of this phenomenon can be reduced or eliminated through greater understanding by designers, detailers and fabricators of the inherent directionality of rolled steel, the importance of strains associated with solidified weld deposit contraction in the presence of high restraint (rather than externally applied design forces), and the need to adopt appropriate joint and welding details and procedures with proper weld metal for through-thickness connections.

Dexter and Melendrez (2000) demonstrate that W-shapes are not susceptible to lamellar tearing or other through-thickness failures when welded tee joints are made to the flanges at locations away from member ends. When needed for other conditions, special production practices can be specified for steel plates to assist in reducing the incidence of lamellar tearing by enhancing through-thickness ductility. For further information, refer to ASTM A770. However, it must be recognized that it is more important and effective to properly design, detail and fabricate to avoid highly restrained joints. AISC (1973) provides guidelines that minimize potential problems.

WIND AND SEISMIC DESIGN

In general, nearly all building design and construction can be classified into one of two categories: wind and low-seismic applications, and high-seismic applications. For additional discussion regarding seismic design and the applicability of the AISC *Seismic Provisions*, see the Scope statement at the front of this manual.

Wind and Low-Seismic Applications

Wind and low-seismic applications are those in which the AISC *Seismic Provisions* are not applicable. Such buildings are designed to meet the provisions in the AISC *Specification* based upon the code-specified forces distributed throughout the framing assuming a nominally elastic structural response. The resulting systems have normal levels of ductility. It is important to note that the applicable building code includes seismic design requirements even if the AISC *Seismic Provisions* are not applicable. See the AISC *Seismic Design Manual* for additional discussion.

High-Seismic Applications

High-seismic applications are those in which the building is designed to meet the provisions in both the AISC *Seismic Provisions* and the AISC *Specification*. Note that it does not matter if wind or earthquake controls in this case. High-seismic design and construction will

generally cost more than wind and low-seismic design and construction, as the resulting systems are designed to have high levels of ductility.

High-seismic lateral framing systems are configured to be capable of withstanding strong ground motions as they undergo controlled ductile deformations to dissipate energy. Consider the following three examples:

1. Special Concentrically Braced Frames (SCBF)—SCBF are generally configured so that any inelasticity will occur by tension yielding and/or compression buckling in the braces. The connections of the braces to the columns and beams and between the columns and beams themselves must then be proportioned to remain nominally elastic as they undergo these deformations.
2. Eccentrically Braced Frames (EBF)—EBF are generally configured so that any inelasticity will occur by shear yielding and/or flexural yielding in the link. The beam outside the link, connections, braces and columns must then be proportioned to remain nominally elastic as they undergo these deformations.
3. Special Moment Frames (SMF)—SMF are generally configured so that any inelasticity will occur by flexural yielding in the girders near, but away from, the connection of the girders to the columns. The connections of the girders to the columns and the columns themselves must then be proportioned to remain nominally elastic as they undergo these deformations. Intermediate moment frames (IMF) and ordinary moment frames (OMF) are also configured to provide improved seismic performance, although successively lower than that for SMF.

The code-specified base accelerations used to calculate the seismic forces are not necessarily maximums, but rather, they represent the intensity of ground motions that have been selected by the code-writing authorities as reasonable for design purposes. Accordingly, the requirements in both the AISC *Seismic Provisions* and the AISC *Specification* must be met so that the resulting frames can then undergo controlled deformations in a ductile, well-distributed manner.

The design provisions for high-seismic systems are also intended to result in distributed deformations throughout the frame, rather than the formation of story mechanisms, so as to increase the level of available energy dissipation and corresponding level of ground motion that can be withstood.

The member sizes in high-seismic frames will be larger than those in wind and low-seismic frames. The connections will also be much more robust so they can transmit the member-strength-driven force demands. Net sections will often require special attention so as to avoid having fracture limit states control. Special material requirements, design considerations and construction practices must be followed. For further information on the design and construction of high-seismic systems, see the AISC *Seismic Provisions*, which are available at **www.aisc.org**.

PART 2 REFERENCES

Much of the material referenced in the *Steel Construction Manual* may be found at **www.aisc.org**.

ACI (2008), *Building Code Requirements for Structural Concrete and Commentary*, ACI 318, American Concrete Institute, Farmington Hills, MI.

Allison, H. (1991), *Low- and Medium-Rise Steel Buildings*, Design Guide 5, AISC, Chicago, IL.

AISC (1973), "Commentary on Highly Restrained Welded Connections," *Engineering Journal*, Vol. 10, No. 3, 3rd Quarter, American Institute of Steel Construction, Chicago, IL.

AISC (2005), *Specification for Structural Steel Buildings*, ANSI/AISC 360-05, American Institute of Steel Construction, Chicago, IL.

AISC (2006), *Seismic Design Manual*, American Institute of Steel Construction, Chicago, IL.

AISC (2009), *Detailing for Steel Construction*, 3rd Ed., American Institute of Steel Construction, Chicago, IL.

AISC (2010a), *Specification for Structural Steel Buildings*, ANSI/AISC 360-10, American Institute of Steel Construction, Chicago, IL.

AISC (2010b), *Seismic Provisions for Structural Steel Buildings*, AISI/AISC 341-10, American Institute of Steel Construction, Chicago, IL.

AISC (2010c), *Code of Standard Practice for Steel Buildings and Bridges*, American Institute of Steel Construction, Chicago, IL.

AISC (2011), *Design Examples*, V. 14.0, American Institute of Steel Construction, Chicago, IL.

ASCE (2010), *Minimum Design Loads for Buildings and Other Structures*, ASCE/SEI 7-10, American Society of Civil Engineers, Reston, VA.

AWS (2007), *Standard Symbols for Welding, Brazing, and Nondestructive Examination*, AWS A2.4, American Welding Society, Miami, FL.

AWS (2010), *Structural Welding Code—Steel*, AWS D1.1:2010, American Welding Society, Miami, FL.

Barger, B.L. and West, M.A. (2001), "New OSHA Erection Rules: How They Affect Engineers, Fabricators and Contractors," *Modern Steel Construction*, May, AISC, Chicago, IL.

Barsom, J.A. and Rolfe, S.T. (1999), *Fracture and Fatigue Control in Structures: Applications of Fracture Mechanics*, 3rd Edition, ASTM, West Conshohocken, PA.

Bjorhovde, R. (2006), "Cold Bending of Wide-Flange Shapes for Construction," *Engineering Journal*, AISC, Vol. 43, No. 4, 4th Quarter, Chicago, IL, pp 271-286.

Brockenbrough, R.L. and Merritt, F.S. (1999), *Structural Steel Designer's Handbook*, 3rd Edition, McGraw-Hill, New York, NY.

Brockenbrough, R.L. (2002), *AISC Rehabilitation and Retrofit Guide—A Reference for Historic Shapes and Specifications*, Design Guide 15, AISC, Chicago, IL.

Camp, J.M., Francis, C.B. and McGannon H.E. (1951), *The Making, Shaping and Treating of Steel*, 6th Edition, U.S. Steel, Pittsburgh, PA.

Carter, C.J. (1999), *Stiffening of Wide-Flange Columns at Moment Connections: Wind and Seismic Applications*, Design Guide 13, AISC, Chicago, IL.

CASE (2003), *A Guideline Addressing Coordination and Completeness of Structural Construction Documents*, Document 962D, Council of American Structural Engineers.

Churches, C.H., Troup, E.W.J. and Angeloff, C. (2003), *Steel-Framed Open-Deck Parking Structures*, Design Guide 18, AISC, Chicago, IL.

CISC (1989), *Roof Framing with Cantilever (Gerber) Girders & Open Web Joists*, Canadian Institute of Steel Construction, Willowdale, Ontario, Canada.

Darwin, D. (1990), *Steel and Composite Beams with Web Openings*, Design Guide 2, AISC, Chicago, IL.

Dexter, R.J. and Melendrez, M.I. (2000), "Through-Thickness Properties of Column Flanges in Welded Moment Connections," *Journal of Structural Engineering*, ASCE, Vol. 126, No. 1, pp. 24–31.

DOD (2009), *Design of Buildings to Resist Progressive Collapse*, UFC 4-023-03, July.

Federal Construction Council (1974), Technical Report No. 65 *Expansion Joints in Buildings*, National Research Council, Washington, DC.

Fisher, J.M. and West, M.A. (1997), *Erection Bracing of Low-Rise Structural Steel Buildings*, Design Guide 10, AISC, Chicago, IL.

Fisher, J.M. (2004), *Industrial Buildings—Roofs to Anchor Rods*, Design Guide 7, 2nd Ed., AISC, Chicago, IL.

Fisher, J.M. and Kloiber, L.A. (2006), *Base Plate and Anchor Rod Design*, Design Guide 1, 2nd Ed., AISC, Chicago, IL.

Fisher, J.W., Kulak, G.L. and Smith, I.F.C. (1998), *A Fatigue Primer for Structural Engineers*, NSBA/AISC, Chicago, IL.

Geschwindner, L.F. and Gustafson, K. (2010), "Single-Plate Shear Connection Design to meet Structural Integrity Requirements," *Engineering Journal*, AISC, Vol. 47, No. 3, 3rd Quarter, pp. 189–202.

Griffis, L.G. (1992), *Load and Resistance Factor Design of W-Shapes Encased in Concrete*, Design Guide 6, AISC, Chicago, IL.

Gross, J.L., Engelhardt, M.D., Uang, C.M., Kasai, K. and Iwankiw, N.R. (1999), *Modification of Existing Welded Steel Moment Frame Connections for Seismic Resistance*, Design Guide 12, AISC, Chicago, IL.

ICC (2009), *International Building Code*, International Code Council, Falls Church, VA.

Kaehler, R.C. and White, D.W. (2010), *Web-Tapered Frame Design*, Design Guide 25, AISC, Chicago, IL.

Kulak, G.L. (2002), *High Strength Bolts—A Primer for Structural Engineers*, Design Guide 17, AISC, Chicago, IL.

Leon, R.T., Hoffman, J.J. and Staeger, T. (1996), *Partially Restrained Composite Connections*, Design Guide 8, AISC, Chicago, IL.

Miller, D.K. (2006), *Welded Connections—A Primer for Engineers*, Design Guide 21, AISC, Chicago, IL.

Murray, T.M. and Sumner, E.A. (2003), *Extended End-Plate Moment Connections—Seismic and Wind Applications*, Design Guide 4, 2nd Ed., AISC, Chicago, IL.

Murray, T.M., Allen, D.E. and Ungar, E.E. (1997), *Floor Vibrations Due to Human Activity*, Design Guide 11, AISC, Chicago, IL.

Murray, T.M. and Shoemaker, W.L. (2002), *Flush and Extended Multiple-Row Moment End-Plate Connections*, Design Guide 16, AISC, Chicago, IL.

OSHA (2001), *Safety and Health Standards for the Construction Industry, 29 CFR 1926 Part R Safety Standards for Steel Erection*, Occupational Safety and Health Administration, Washington, DC.

Packer, J., Sherman, D. and Leece, M. (2010), *Hollow Structural Section Connections*, Design Guide 24, AISC, Chicago, IL.

Parker, J.C. (2008), *Façade Attachments to Steel-Framed Buildings*, Design Guide 22, AISC, Chicago, IL.

RCSC (2009), *Specification for Structural Joints Using High-Strength Bolts*, Research Council on Structural Connections, Chicago, IL.

Ricker, D.T. (1988), "Field Welding to Existing Structures," *Engineering Journal*, AISC, Vol. 25, No. 1, 1st Quarter, pp. 1–16.

Rolfe, S.T. (1977), "Fracture and Fatigue Control in Steel Structures," *Engineering Journal*, AISC, Vol. 14, No. 1, 1st Quarter, pp. 2–15.

Rongoe, J. (1996), "Design Guidelines for Continuous Beams Supporting Steel Joist Roof Structures," *Proceedings of the AISC National Steel Construction Conference*, pp. 23.1–23.44, AISC, Chicago, IL.

Ruby, D.I. (2008), *Constructability of Structural Steel Buildings*, Design Guide 23, AISC, Chicago, IL.

Ruddy, J.L. (1986), "Ponding of Concrete Deck Floors," *Engineering Journal*, AISC, Vol. 23, No. 3, 3rd Quarter, pp. 107–115.

Ruddy, J.L., Marlo, J.P., Ioannides, S.A and Alfawakhiri, F. (2003), *Fire Resistance of Structural Steel Framing*, Design Guide 19, AISC, Chicago, IL.

Sabelli, R. and Bruneau, M. (2006), *Steel Plate Shear Walls*, Design Guide 20, AISC, Chicago, IL.

Seaburg, P.A. and Carter, C.J. (1997), *Torsional Analysis of Structural Steel Members*, Design Guide 9, AISC, Chicago, IL.

SSPC (2000), *Systems and Specifications: SSPC Painting Manual, Volume II*, 8th Edition, The Society for Protective Coatings, Pittsburgh, PA.

Thornton, W.A. (1995), "Connections: Art, Science, and Information in the Quest for Economy and Safety," *Engineering Journal*, AISC, Vol 32, No. 4, 4th Quarter, pp. 132–144.

Tide, R.H.R. (1990), "Reinforcing Steel Members and the Effects of Welding," *Engineering Journal*, AISC, Vol. 27, No. 4, 4th Quarter, pp. 129–131.

USGSA (2003), "Progressive Collapse Analysis and Design Guidelines for New Federal Office Buildings and Major Modernization Projects," U.S. General Services Administration, Washington, DC.

West, M.A., Fisher, J.M. and Griffis, L.G. (2003), *Serviceability Design Considerations for Steel Buildings*, Design Guide 3, 2nd Ed., AISC, Chicago, IL.

Wexler, N. and Lin, F.B. (2002), *Staggered Truss Framing Systems*, Design Guide 14, AISC, Chicago, IL.

Table 2-2
Summary Comparison of Methods for Stability Analysis and Design

	Direct Analysis Method	Effective Length Method	First-Order Analysis Method
Limitations on Use[a]	None	$\Delta_{2nd}/\Delta_{1st} \le 1.5$	$\Delta_{2nd}/\Delta_{1st} \le 1.5$ $\alpha P_r/P_y \le 0.5$
Analysis Type	Second-order elastic[b]		First-order elastic
Geometry of Structure	All three methods use the undeformed geometry in the analysis.		
Minimum or Additional Lateral Loads Required in the Analysis	Minimum;[c] 0.2% of the story gravity load	Minimum; 0.2% of the story gravity load	Additive; at least 0.42% of the story gravity load
Member Stiffnesses Used in the Analysis	Reduced EA and EI	Nominal EA and EI	
Design of Columns	$K = 1$ for all frames	$K = 1$ for braced frames. For moment frames, determine K from sidesway buckling analysis[d]	$K = 1$ for all frames[e]
Specification Reference for Method	Chapter C	Appendix Section 7.2	Appendix Section 7.3

[a] $\Delta_{2nd}/\Delta_{1st}$ is the ratio of second-order drift to first-order drift, which can be taken to be equal to B_2 calculated per Appendix 8. $\Delta_{2nd}/\Delta_{1st}$ is determined using LRFD load combinations or a multiple of 1.6 times ASD load combinations.
[b] Either a general second-order analysis method or second-order analysis by amplified first-order analysis (the "B_1-B_2 method" described in Appendix 8) can be used.
[c] This notional load is additive if $\Delta_{2nd}/\Delta_{1st} > 1.5$.
[d] $K = 1$ is permitted for moment frames when $\Delta_{2nd}/\Delta_{1st} \le 1.1$.
[e] An additional amplification for member curvature effects is required for columns in moment frames.

Table 2-3
AISI Standard Nomenclature for Flat-Rolled Carbon Steel

Thickness, in.	Width, in.					
	To 3½ incl.	Over 3½ To 6	Over 6 To 8	Over 8 To 12	Over 12 To 48	Over 48
0.2300 & thicker	Bar	Bar	Bar	Plate	Plate	Plate
0.2299 to 0.2031	Bar	Bar	Strip	Strip	Sheet	Plate
0.2030 to 0.1800	Strip	Strip	Strip	Strip	Sheet	Plate
0.1799 to 0.0449	Strip	Strip	Strip	Strip	Sheet	Sheet
0.0448 to 0.0344	Strip	Strip				
0.0343 to 0.0255	Strip		Hot-rolled sheet and strip not generally produced in these widths and thicknesses			
0.0254 & thinner						

Table 2-4
Applicable ASTM Specifications for Various Structural Shapes

Steel Type	ASTM Designation		F_y Min. Yield Stress (ksi)	F_u Tensile Stress[a] (ksi)	Applicable Shape Series									
					W	M	S	HP	C	MC	L	HSS Rect.	HSS Round	Pipe
Carbon	A36		36	58-80[b]	▒	■	■	▒	■	■	■			
	A53 Gr. B		35	60										■
	A500	Gr. B	42	58									■	
			46	58								■		
		Gr. C	46	62									▒	
			50	62								▒		
	A501	Gr. A	36	58								▒	▒	
		Gr. B	50	70								▒	▒	
	A529[c]	Gr. 50	50	65-100	▒	▒	▒	▒	▒	▒	▒			
		Gr. 55	55	70-100	▒	▒	▒	▒	▒	▒	▒			
High-Strength Low-Alloy	A572	Gr. 42	42	60	▒	▒	▒	▒	▒	▒	▒			
		Gr. 50	50	65[d]	▒	▒	▒	■	▒	▒	▒			
		Gr. 55	55	70	▒	▒	▒	▒	▒	▒	▒			
		Gr. 60[e]	60	75	▒	▒	▒	▒	▒	▒	▒			
		Gr. 65[e]	65	80	▒	▒	▒	▒	▒	▒	▒			
	A618[f]	Gr. I & II	50[g]	70[c]								▒	▒	
		Gr. III	50	65								▒	▒	
	A913	50	50[h]	60[h]	▒	▒	▒	▒	▒	▒	▒			
		60	60	75	▒	▒	▒	▒	▒	▒	▒			
		65	65	80	▒	▒	▒	▒	▒	▒	▒			
		70	70	90	▒	▒	▒	▒	▒	▒	▒			
	A992		50	65[i]	■	▒	▒	▒	▒	▒	▒			
Corrosion Resistant High-Strength Low-Alloy	A242		42[j]	63[j]	▒									
			46[k]	67[k]	▒			▒						
			50[l]	70[l]	▒	▒	▒	▒	▒	▒	▒			
	A588		50	70	▒	▒	▒	▒	▒	▒	▒			
	A847		50	70								▒	▒	

■ = Preferred material specification
▒ = Other applicable material specification, the availability of which should be confirmed prior to specification
□ = Material specification does not apply

[a] Minimum unless a range is shown.
[b] For shapes over 426 lb/ft, only the minimum of 58 ksi applies.
[c] For shapes with a flange thickness less than or equal to 1½ in. only. To improve weldability, a maximum carbon equivalent can be specified (per ASTM Supplementary Requirement S78). If desired, maximum tensile stress of 90 ksi can be specified (per ASTM Supplementary Requirement S79).
[d] If desired, maximum tensile stress of 70 ksi can be specified (per ASTM Supplementary Requirement S91).
[e] For shapes with a flange thickness less than or equal to 2 in. only.
[f] ASTM A618 can also be specified as corrosion-resistant; see ASTM A618.
[g] Minimum applies for walls nominally ¾-in. thick and under. For wall thicknesses over ¾ in., $F_y = 46$ ksi and $F_u = 67$ ksi.
[h] If desired, maximum yield stress of 65 ksi and maximum yield-to-tensile strength ratio of 0.85 can be specified (per ASTM Supplementary Requirement S75).
[i] A maximum yield-to-tensile strength ratio of 0.85 and carbon equivalent formula are included as mandatory in ASTM A992.
[j] For shapes with a flange thickness greater than 2 in. only.
[k] For shapes with a flange thickness greater than 1½ in. and less than or equal to 2 in. only.
[l] For shapes with a flange thickness less than or equal to 1½ in. only.

Table 2-5
Applicable ASTM Specifications for Plates and Bars

Steel Type	ASTM Designation		F_y Min. Yield Stress (ksi)	F_u Tensile Stress[a] (ksi)	Plates and Bars: to 0.75 incl.	over 0.75 to 1.25	over 1.25 to 1.5	over 1.5 to 2 incl.	over 2 to 2.5 incl.	over 2.5 to 4 incl.	over 4 to 5 incl.	over 5 to 6 incl.	over 6 to 8 incl.	over 8
Carbon	A36		32	58-80										■
			36	58-80	■	■	■	■	■	■	■	■	■	
	A529	Gr. 50	50	70-100	▒	▒	▒	▒	▒					
		Gr. 55	55	70-100	▒	▒	▒							
High-Strength Low-Alloy	A572	Gr. 42	42	60	▒	▒	▒	▒	▒	▒	▒	▒		
		Gr. 50	50	65	▒	▒	▒	▒	▒	▒				
		Gr. 55	55	70	▒	▒	▒	▒						
		Gr. 60	60	75	▒	▒								
		Gr. 65	65	80	▒	▒								
Corrosion Resistant High-Strength Low-Alloy	A242		42	63				▒	▒	▒				
			46	67		▒	▒							
			50	70	▒									
	A588		42	63								▒	▒	
			46	67							▒			
			50	70	▒	▒	▒	▒	▒	▒				
Quenched and Tempered Alloy	A514[c]		90	100-130						▒	▒	▒		
			100	110-130	▒	▒	▒	▒	▒					
Quenched and Tempered Low-Alloy	A852[c]		70	90-110	▒	▒	▒	▒	▒	▒				

■ = Preferred material specification
▒ = Other applicable material specification, the availability of which should be confirmed prior to specification
□ = Material specification does not apply

[a] Minimum unless a range is shown.
[b] Applicable to bars only above 1-in. thickness.
[c] Available as plates only.

Table 2-6
Applicable ASTM Specifications for Various Types of Structural Fasteners

ASTM Designation		F_y Min. Yield Stress (ksi)	F_u Tensile Stress[a] (ksi)	Diameter Range (in.)	High-Strength Bolts: Conventional	High-Strength Bolts: Twist-Off-Type Tension-Control	Common Bolts	Nuts	Washers	Direct-Tension-Indicator Washers	Threaded Rods	Steel Headed Stud Anchors	Anchor Rods: Hooked	Anchor Rods: Headed	Anchor Rods: Threaded & Nutted
A108		—	65	0.375 to 0.75, incl.								■			
A325[d]		—	105	over 1 to 1.5, incl.	■										
		—	120	0.5 to 1, incl.	■										
A490[d]		—	150	0.5 to 1.5	■										
F1852[d]		—	105	1.125		■									
		—	120	0.5 to 1, incl.		■									
F2280[d]		—	150	0.5 to 1.125, incl.		■									
A194 Gr. 2H		—	—	0.25 to 4				▒							
A563		—	—	0.25 to 4				■							
F436[b]		—	—	0.25 to 4					■						
F959		—	—	0.5 to 1.5						■					
A36		36	58-80	to 10							■		▒		▒
A193 Gr. B7[e]		—	100	over 4 to 7							▒		▒		▒
		—	115	over 2.5 to 4							▒		▒		▒
		—	125	2.5 and under							▒		▒		▒
A307 Gr. A		—	60	0.25 to 4			■								
A354 Gr. BD		—	140	2.5 to 4, incl.							▒		▒	▒	▒
		—	150	0.25 to 2.5, incl.							▒		▒	▒	▒
A449		—	90	1.75 to 3, incl.	[c]						▒		▒	▒	▒
		—	105	1.125 to 1.5, incl.	[c]						▒		▒	▒	▒
		—	120	0.25 to 1, incl.	[c]						▒		▒	▒	▒
A572	Gr. 42	42	60	to 6							▒		▒		▒
	Gr. 50	50	65	to 4							▒		▒		▒
	Gr. 55	55	70	to 2							▒		▒		▒
	Gr. 60	60	75	to 1.25							▒		▒		▒
	Gr. 65	65	80	to 1.25							▒		▒		▒
A588		42	63	Over 5 to 8, incl.							▒		▒		▒
		46	67	Over 4 to 5, incl.							▒		▒		▒
		50	70	4 and under							▒		▒		▒
A687		105	150 max.	0.625 to 3							▒		▒		▒
F1554	Gr. 36	36	58-80	0.25 to 4									■	■	■
	Gr. 55	55	75-95	0.25 to 4									■	■	■
	Gr. 105	105	125-150	0.25 to 3									▒	▒	▒

■ = Preferred material specification
▒ = Other applicable material specification, the availability of which should be confirmed prior to specification
□ = Material specification does not apply

— Indicates that a value is not specified in the material specification.

[a] Minimum unless a range is shown or maximum (max.) is indicated.

[b] Special washer requirements may apply per RCSC *Specification* Table 6.1 for some steel-to-steel bolting applications and per Part 14 for anchor-rod applications.

[c] See AISC *Specification* Section J3.1 for limitations on use of ASTM A449 bolts.

[d] When atmospheric corrosion resistance is desired, Type 3 can be specified.

[e] For anchor rods with temperature and corrosion resistance characteristics.

Table 2-7
Metal Fastener Compatibility to Resist Corrosion

Fastener Metal / Base Metal	Zinc and Galvanized Steel	Aluminum and Aluminum Alloys	Steel and Cast Iron	Brasses, Copper, Bronzes, Monel	Martensitic Stainless Steel (Type 410)	Austenitic Stainless Steel (Type 302/304, 303, 305)
Zinc and Galvanized Steel	A	B	B	C	C	C
Aluminum and Aluminum Alloys	A	A	B	C	Not Recommended	B
Steel and Cast Iron	A, D	A	A	C	C	B
Terne (Lead-Tin) Plated Steel Sheets	A, D, E	A, E	A, E	C	C	B
Brasses, Copper, Bronzes, Monel	A, D, E	A, E	A, E	A	A	B
Ferritic Stainless Steel (Type 430)	A, D, E	A, E	A, E	A	A	A
Austenitic Stainless Steel (Type 302/304)	A, D, E	A, E	A, E	A, E	A	A

KEY

A. The corrosion of the base metal is not increased by the fastener.
B. The corrosion of the base metal is marginally increased by the fastener.
C. The corrosion of the base metal may be markedly increased by the fastener material.
D. The plating on the fastener is rapidly consumed, leaving the bare fastener metal.
E. The corrosion of the fastener is increased by the base metal.

NOTE: Surface treatment and environment can change activity. For a more thorough understanding of metal corrosion in construction materials, please consult a full listing of the galvanic series of metals and alloys.

Note: Reprinted from the Specialty Steel Industry of North America *Stainless Steel Fasteners Designer's Handbook*.

Table 2-8
Summary of Surface Preparation Specifications

SSPC Specification No.	Title	Description
SP1	Solvent Cleaning	Removal of oil, grease, dirt, soil, salts and contaminants by cleaning with solvent, vapor, alkali, emulsion or steam.
SP2	Hand-Tool Cleaning	Removal of all loose rust, loose mill scale and loose paint to degree specified, by hand-chipping, scraping, sanding and wire brushing.
SP3	Power-Tool Cleaning	Removal of all loose rust, loose mill scale and loose paint to degree specified, by power-tool chipping, descaling, sanding, wire brushing, and grinding.
SP5/NACE No.1	Metal Blast Cleaning	Removal of all visible rust, mill scale, paint and foreign matter by blast-cleaning by wheel or nozzle (dry or wet) using sand, grit or shot. (For very corrosive atmospheres where high cost of cleaning is warranted.)
SP6/NACE No.3	Commercial Blast-Cleaning	Blast-cleaning until at least two-thirds of the surface area is free of all visible residues. (For conditions where thoroughly cleaned surface is required.)
SP7/NACE No. 4	Brush-Off Blast-Cleaning	Blast-cleaning of all except tightly adhering residues of mill scale, rust and coatings, exposing numerous evenly distributed flecks of underlying metal.
SP8	Pickling	Complete removal of rust and mill scale by acid-pickling, duplex-pickling or electrolytic pickling.
SP10/NACE No.2	Near-White Blast-Cleaning	Blast-cleaning to nearly white metal cleanliness, until at least 95% of the surface area is free of all visible residues. (For high humidity, chemical atmosphere, marine or other corrosive environments.)
SP11	Power-Tool Cleaning to Bare Metal	Complete removal of all rust, scale and paint by power tools, with resultant surface profile.

PART 3

DESIGN OF FLEXURAL MEMBERS

SCOPE 3–4
SECTION PROPERTIES AND AREAS 3–4
For Flexure 3–4
For Shear 3–4
FLEXURAL STRENGTH 3–4
Braced, Compact Flexural Members 3–4
Unbraced Flexural Members 3–4
Noncompact or Slender Cross Sections 3–4
Available Flexural Strength for Weak-Axis Bending 3–4
LOCAL BUCKLING 3–6
Determining the Width-to-Thickness Ratios of the Cross Section 3–6
Classification of Cross Sections 3–6
LATERAL-TORSIONAL BUCKLING 3–6
Classification of Spans for Flexure 3–6
Consideration of Moment Gradient 3–6
AVAILABLE SHEAR STRENGTH 3–7
STEEL W-SHAPE BEAMS WITH COMPOSITE SLABS 3–7
Concrete Slab Effective Width 3–7
Steel Anchors 3–7
Available Flexural Strength for Positive Moment 3–7
Shored and Unshored Construction 3–8
Available Shear Strength 3–8
OTHER SPECIFICATION REQUIREMENTS AND DESIGN CONSIDERATIONS 3–8
Special Requirements for Heavy Shapes and Plates 3–8
Serviceability 3–8
DESIGN TABLE DISCUSSION 3–9
Flexural Design Tables 3–9
W-Shape Selection Tables 3–9
Maximum Total Uniform Load Tables 3–10

Plots of Available Flexural Strength vs. Unbraced Length 3–11
Available Flexural Strength of HSS 3–11
Strength of Other Flexural Members 3–12
Composite Beam Selection Tables 3–12
Beam Diagrams and Formulas 3–16
PART 3 REFERENCES 3–17
DESIGN TABLES 3–18
Flexural Design Tables 3–18
Table 3-1. Values of C_b for Simply Supported Beams 3–18
W-Shape Selection Tables 3–19
Table 3-2. W-Shapes—Selection by Z_x 3–19
Table 3-3. W-Shapes—Selection by I_x 3–28
Table 3-4. W-Shapes—Selection by Z_y 3–30
Table 3-5. W-Shapes—Selection by I_y 3–33
Maximum Total Uniform Load Tables 3–35
Table 3-6. W-Shapes—Maximum Total Uniform Load 3–35
Table 3-7. S-Shapes—Maximum Total Uniform Load 3–80
Table 3-8. C-Shapes—Maximum Total Uniform Load 3–85
Table 3-9. MC-Shapes—Maximum Total Uniform Load 3–91
Plots of Available Flexural Strength vs. Unbraced Length 3–99
Table 3-10. W-Shapes—Plots of Available Moment vs. Unbraced Length 3–99
Table 3-11. C- and MC-Shapes—Plots of Available Moment vs. Unbraced Length 3–135
Available Flexural Strength of HSS 3–143
Table 3-12. Rectangular HSS—Available Flexural Strength 3–143
Table 3-13. Square HSS—Available Flexural Strength 3–147
Table 3-14. Round HSS—Available Flexural Strength 3–148
Table 3-15. Pipe—Available Flexural Strength 3–151
Strength of Other Flexural Members 3–152
Tables 3-16 and 3-17. Available Shear Stress in Plate Girders 3–152
Table 3-18. Floor Plates 3–156
Composite Beam Selection Tables 3–158
Table 3-19. Composite W-Shapes 3–158
Table 3-20. Lower-Bound Elastic Moment of Inertia 3–192
Table 3-21. Nominal Horizontal Shear Strength for One Steel Headed Stud Anchor, Q_n 3–209

Beam Diagrams and Formulas 3–210
Table 3-22a. Concentrated Load Equivalents 3–210
Table 3-22b. Cantilevered Beams 3–211
Table 3-22c. Continuous Beams 3–212
Table 3-23. Shears, Moments and Deflections 3–213

SCOPE

The specification requirements and other design considerations summarized in this Part apply to the design of flexural members subject to uniaxial flexure without axial forces or torsion. For the design of members subject to biaxial flexure and/or flexure in combination with axial tension or compression and/or torsion, see Part 6.

SECTION PROPERTIES AND AREAS

For Flexure

Flexural design properties are based upon the full cross section with no reduction for bolt holes when the limitations in AISC *Specification* Section F13.1(a) are satisfied. Otherwise, the flexural design properties are based upon a flexural rupture check given in AISC *Specification* Section F13.1(b).

For Shear

For shear, the area is determined per AISC *Specification* Chapter G.

FLEXURAL STRENGTH

The nominal flexural strength of W-shapes is illustrated as a function of the unbraced length, L_b, in Figure 3-1. The available strength is determined as ϕM_n or M_n/Ω, which must equal or exceed the required strength (bending moment), M_u or M_a, respectively. The available flexural strength, ϕM_n or M_n/Ω, is determined per AISC *Specification* Chapter F. Table User Note F1.1 outlines the sections of Chapter F and the corresponding limit states applicable to each member type.

Braced, Compact Flexural Members

When flexural members are braced ($L_b \le L_p$) and compact ($\lambda \le \lambda_p$), yielding must be considered in the nominal moment strength of the member, in accordance with the requirements of AISC *Specification* Chapter F.

Unbraced Flexural Members

When flexural members are unbraced ($L_b > L_p$), have flange width-to-thickness ratios such that $\lambda > \lambda_p$, or have web width-to-thickness ratios such that $\lambda > \lambda_p$, lateral-torsional and elastic buckling effects must be considered in the calculation of the nominal moment strength of the member.

Noncompact or Slender Cross Sections

For flexural members that have width-to-thickness ratios such that $\lambda > \lambda_p$, local buckling must be considered in the calculation of the nominal moment strength of the member.

Available Flexural Strength for Weak-Axis Bending

The design of flexural members subject to weak-axis bending is similar to that for strong-axis bending, except that lateral-torsional buckling and web local buckling do not apply. See AISC *Specification* Section F6.

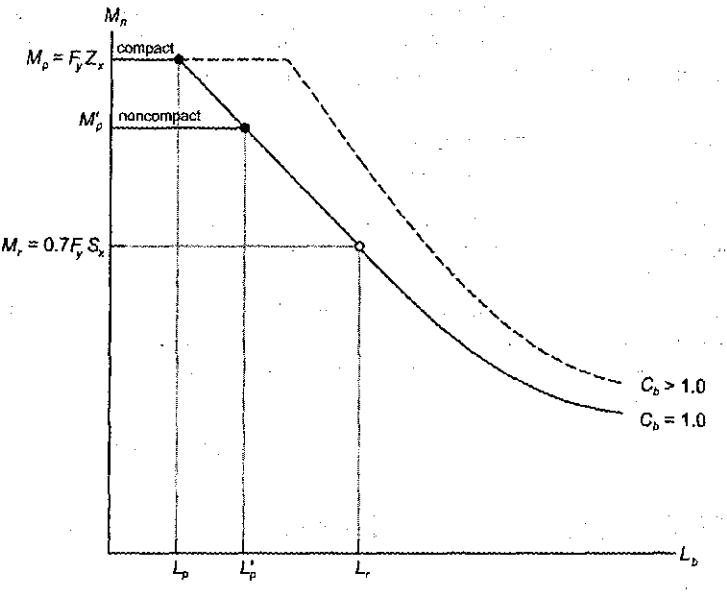

$$L_p = 1.76 r_y \sqrt{\frac{E}{F_y}} \qquad \text{(Spec. Eq. F2-5)}$$

$$L_r = 1.95 r_{ts} \frac{E}{0.7F_y} \sqrt{\frac{Jc}{S_x h_o} + \sqrt{\left(\frac{Jc}{S_x h_o}\right)^2 + 6.76\left(\frac{0.7F_y}{E}\right)^2}} \qquad \text{(Spec. Eq. F2-6)}$$

$$M_r = 0.7F_y S_x \qquad (3\text{-}1)$$

For cross sections with noncompact flanges:

$$M'_p = M_n = M_p - \left(M_p - 0.7F_y S_x\right)\left(\frac{\lambda - \lambda_{pf}}{\lambda_{rf} - \lambda_{pf}}\right) \qquad \text{(from Spec. Eq. F3-1)}$$

$$L'_p = L_p + \left(L_r - L_p\right)\frac{\left(M_p - M'_p\right)}{\left(M_p - M_r\right)} \qquad (3\text{-}2)$$

Fig. 3-1. General available flexural strength of beams.

LOCAL BUCKLING

Determining the Width-to-Thickness Ratios of the Cross Section

Flexural members are classified for flexure on the basis of the width-to-thickness ratios of the various elements of the cross section. The width-to-thickness ratio, λ, is determined for each element of the cross section per AISC *Specification* Section B4.1.

Classification of Cross Sections

Cross sections are classified as follows:

- Flexural members are compact (the plastic moment can be reached without local buckling) when λ is equal to or less than λ_p and the flange(s) are continuously connected to the web(s).
- Flexural members are noncompact (local buckling will occur, but only after initial yielding) when λ exceeds λ_p but is equal to or less than λ_r.
- Flexural members are slender-element cross sections (local buckling will occur prior to yielding) when λ exceeds λ_r.

The values of λ_p and λ_r are determined per AISC *Specification* Section B4.1.

LATERAL-TORSIONAL BUCKLING

Classification of Spans for Flexure

Flexural members bent about their strong axis are classified on the basis of the length, L_b, between braced points. Braced points are points at which support resistance against lateral-torsional buckling is provided per AISC *Specification* Appendix 6, Section 6.3. Classifications are determined as follows:

- If $L_b \leq L_p$, flexural member is not subject to lateral-torsional buckling.
- If $L_p < L_b \leq L_r$, flexural member is subject to inelastic lateral-torsional buckling.
- If $L_b > L_r$, flexural member is subject to elastic lateral-torsional buckling.

The values of L_p and L_r are determined per AISC *Specification* Chapter F. These values are presented in Tables 3-2, 3-6, 3-7, 3-8, 3-9, 3-10 and 3-11. Note that for cross sections with noncompact flanges, the value given for L_p in these tables is L_p' as given in Equation 3-2 of Figure 3-1. In Tables 3-10 and 3-11, L_p is defined by • and L_r by ◦.

Lateral-torsional buckling does not apply to flexural members bent about their weak axis or HSS bent about either axis, per AISC *Specification* Sections F6, F7 and F8.

Consideration of Moment Gradient

When $L_b > L_p$, the moment gradient between braced points can be considered in the determination of the available strength using the lateral-torsional buckling modification factor, C_b, herein referred to as the LTB modification factor. In the case of a uniform moment between braced points causing single-curvature of the member, $C_b = 1.0$. This represents the worst case and C_b can be conservatively taken equal to 1.0 for use with the maximum moment between braced points in most designs. See AISC *Specification* Commentary

Section F1 for further discussion. A nonuniform moment gradient between braced points can be considered using C_b calculated as given in AISC *Specification* Equation F1-1. Exceptions are provided as follows:

1. As an alternative, when the moment diagram between braced points is a straight line, C_b can be calculated as given in AISC *Specification* Commentary Equation C-F1-1.
2. For cantilevers or overhangs where the free end is unbraced, $C_b = 1.0$ per AISC *Specification* Section F1.
3. For tees with the stem in compression, $C_b = 1.0$ as recommended in AISC *Specification* Commentary Section F9.

AVAILABLE SHEAR STRENGTH

For flexural members, the available shear strength, ϕV_n or V_n/Ω, which must equal or exceed the required strength, V_u or V_a, respectively, is determined in accordance with AISC *Specification* Chapter G. Values of ϕV_n and V_n/Ω can be found in Tables 3-2, 3-6, 3-7, 3-8 and 3-9.

STEEL W-SHAPE BEAMS WITH COMPOSITE SLABS

The following pertains to W-shapes with composite concrete slabs in regions of positive moment. For composite flexural members in regions of negative moment, see AISC *Specification* Chapter I. For further information on composite design and construction, see Viest et al. (1997).

Concrete Slab Effective Width

The effective width of a concrete slab acting compositely with a steel beam is determined per AISC *Specification* Section I3.1a.

Steel Anchors

Material, placement and spacing requirements for steel anchors are given in AISC *Specification* Chapter I. The nominal shear strength, Q_n, of one steel headed stud anchor is determined per AISC *Specification* Section I8.2a and is tabulated for common design conditions in Table 3-21. The horizontal shear strength, V_r', at the steel-concrete interface will be the least of the concrete crushing strength, steel tensile yield strength, or the shear strength of the steel anchors. Table 3-21 considers only the limit state of shear strength of a steel headed stud anchor.

Available Flexural Strength for Positive Moment

The available flexural strength of a composite beam subject to positive moment is determined per AISC *Specification* Section I3.2a assuming a uniform compressive stress of $0.85f_c'$ and zero tensile strength in the concrete, and a uniform stress of F_y in the tension area (and compression area, if any) of the steel section. The position of the plastic neutral axis (PNA) can then be determined by static equilibrium.

Per AISC *Specification* Section I3.2d, enough steel anchors must be provided between a point of maximum moment and the nearest point of zero moment to transfer the total horizontal shear force, V_r', between the steel beam and concrete slab, where V_r' is determined per

AISC *Specification* Section I3.2d(1). For partial composite design, the horizontal shear strength, V_r', controls the available flexural strength of the composite flexural member.

Shored and Unshored Construction

The available flexural strength is identical for both shored and unshored construction. In unshored construction, issues such as lateral support during construction and construction-load deflection may require consideration.

Available Shear Strength

Per AISC *Specification* Section I4, the available shear strength for composite beams is determined as illustrated previously for steel beams.

OTHER SPECIFICATION REQUIREMENTS AND DESIGN CONSIDERATIONS

The following other specification requirements and design considerations apply to the design of flexural members.

Special Requirements for Heavy Shapes and Plates

For beams with complete-joint-penetration groove welded joints and made from heavy shapes with a flange thickness exceeding 2 in., see AISC *Specification* Sections A3.1c.

For built-up sections consisting of plates with a thickness exceeding 2 in., see Section A3.1d.

Serviceability

Serviceability requirements, per AISC *Specification* Chapter L, should be appropriate for the application. This includes an appropriate limit on the deflection of the flexural member and the vibration characteristics of the system of which the flexural member is a part. See also AISC Design Guide 3, *Serviceability Design Considerations for Steel Buildings* (West and Fisher, 2003), AISC Design Guide 5, *Low- and Medium-Rise Steel Buildings* (Allison, 1991) and AISC Design Guide 11, *Floor Vibrations Due to Human Activity* (Murray et al., 1997).

The maximum vertical deflection, Δ, can be calculated using the equations given in Tables 3-22 and 3-23. Alternatively, for common cases of simple-span beams and I-shaped members and channels, the following equation can be used:

$$\Delta = ML^2/(C_1 I_x) \tag{3-3}$$

where

M = maximum service-load moment, kip-ft

L = span length, ft

I_x = moment of inertia, in.^{4}

C_1 = loading constant (see Figure 3-2) which includes the numerical constants appropriate for the given loading pattern, E (29,000 ksi), and a ft-to-in. conversion factor of 1,728 in.^{3}/ft^3.

DESIGN TABLE DISCUSSION

Flexural Design Tables

Table 3-1. Values of C_b for Simply Supported Beams

Values of the LTB modification factor, C_b, are given for various loading conditions on simple-span beams in Table 3-1.

W-Shape Selection Tables

Table 3-2. W-Shapes—Selection by Z_x

W-shapes are sorted in descending order by strong-axis flexural strength and then grouped in ascending order by weight with the lightest W-shape in each range in bold. Strong-axis available strengths in flexure and shear are given for W-shapes with $F_y = 50$ ksi (ASTM A992). C_b is taken as unity.

For compact W-shapes, when $L_b \le L_p$, the strong-axis available flexural strength, $\phi_b M_{px}$ or M_{px}/Ω_b, can be determined using the tabulated strength values. When $L_p < L_b \le L_r$, linearly interpolate between the available strength at L_p and the available strength at L_r as follows:

LRFD	ASD
$\phi_b M_n = C_b[\phi_b M_{px} - \phi_b BF(L_b - L_p)]$ $\le \phi_b M_{px}$ (3-4a)	$\frac{M_n}{\Omega_b} = C_b\left[\frac{M_{px}}{\Omega_b} - \frac{BF}{\Omega_b}(L_b - L_p)\right]$ $\le \frac{M_{px}}{\Omega_b}$ (3-4b)

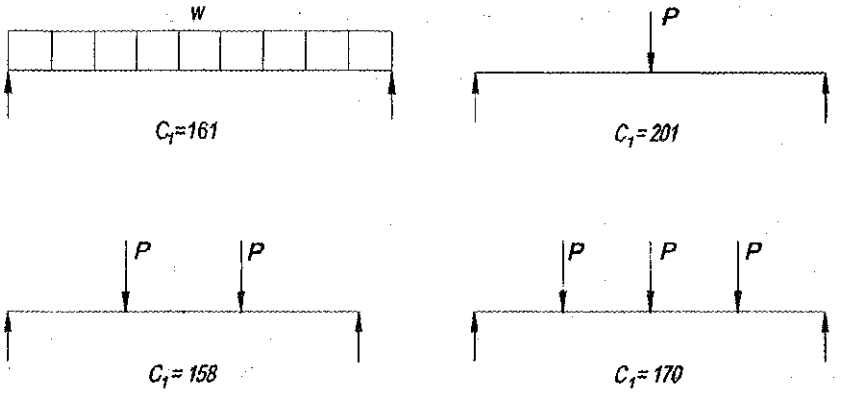

Fig. 3-2. Loading constants for use in determining simple beam deflections.

where

$$BF = \frac{(M_{px} - M_{rx})}{(L_r - L_p)} \quad (3\text{-}5)$$

L_p = for compact sections, see Figure 3-1, AISC *Specification* Equation F2-5
= for noncompact sections, $L_p = L'_p$, see Figure 3-1, Equation 3-2

L_r = see Figure 3-1, AISC *Specification* Equation F2-6

$M_{px} = F_y Z_x$ for compact sections (*Spec.* Eq. F2-1)
$= M'_p$ as given in Figure 3-1, AISC *Specification* Equation F3-1, for noncompact sections

$M_{rx} = M_r$, see Figure 3-1

$\phi_b = 0.90$

$\Omega_b = 1.67$

When $L_b > L_r$, see Table 3-10.

The strong-axis available shear strength, $\phi_v V_{nx}$ or V_{nx}/Ω_v, can be determined using the tabulated value.

Table 3-3. W-Shapes—Selection by I_x

W-shapes are sorted in descending order by strong-axis moment of inertia, I_x, and then grouped in ascending order by weight with the lightest W-shape in each range in bold.

Table 3-4. W-Shapes—Selection by Z_y

W-shapes are sorted in descending order by weak-axis flexural strength and then grouped in ascending order by weight with the lightest W-shape in each range in bold. Weak-axis available strengths in flexure are given for W-shapes with $F_y = 50$ ksi (ASTM A992). C_b is taken as unity.

For noncompact W-shapes, the tabulated values of M_{ny}/Ω_b and $\phi_b M_{ny}$ have been adjusted to account for the noncompactness.

The weak-axis available shear strength must be checked independently.

Table 3-5. W-Shapes—Selection by I_y

W-shapes are sorted in descending order by weak-axis moment of inertia, I_y, and then grouped in ascending order by weight with the lightest W-shape in each range in bold.

Maximum Total Uniform Load Tables

Table 3-6. W-Shapes—Maximum Total Uniform Load

Maximum total uniform loads on braced ($L_b \le L_p$) simple-span beams bent about the strong axis are given for W-shapes with $F_y = 50$ ksi (ASTM A992). The uniform load constant, $\phi_b W_c$ or W_c/Ω_b (kip-ft), divided by the span length, L (ft), provides the maximum total uniform load (kips) for a braced simple-span beam bent about the strong axis. This is based on the available flexural strength as discussed for Table 3-2.

The strong-axis available shear strength, $\phi_v V_n$ or V_n/Ω_v, can be determined using the tabulated value. Above the heavy horizontal line in the tables, the maximum total uniform load is limited by the strong-axis available shear strength.

The tabulated values can also be used for braced simple-span beams with equal concentrated loads spaced as shown in Table 3-22a if the concentrated loads are first converted to an equivalent uniform load.

Table 3-7. S-Shapes—Maximum Total Uniform Load

Table 3-7 is similar to Table 3-6, except it covers S-shapes with $F_y = 36$ ksi (ASTM A36).

Table 3-8. C-Shapes—Maximum Total Uniform Load

Table 3-8 is similar to Table 3-6, except it covers C-shapes with $F_y = 36$ ksi (ASTM A36).

Table 3-9. MC-Shapes—Maximum Total Uniform Load

Table 3-9 is similar to Table 3-6, except it covers MC-shapes with $F_y = 36$ ksi (ASTM A36).

Plots of Available Flexural Strength vs. Unbraced Length

Table 3-10. W-Shapes—Plots of Available Moment vs. Unbraced Length

The strong-axis available flexural strength, $\phi_b M_n$ or M_n/Ω_b, is plotted as a function of the unbraced length, L_b, for W-shapes with $F_y = 50$ ksi (ASTM A992). The plots show the total available strength for an unbraced length, L_b. The moment demand due to all applicable load combinations on that segment may not exceed the strength shown for L_b. C_b is taken as unity.

When the plotted curve is solid, the W-shape for that curve is the lightest cross section for a given combination of available flexural strength and unbraced length. When the plotted curve is dashed, a lighter W-shape than that for the plotted curve exists. The plotted curves are arbitrarily terminated at a span-to-depth ratio of 30 in most cases.

L_p is indicated in each curve by a solid dot (•). L_r is indicated in each curve by an open dot (○).

Table 3-11. C- and MC-Shapes—Plots of Available Moment vs. Unbraced Length

Table 3-11 is similar to Table 3-10, except it covers C- and MC-shapes with $F_y = 36$ ksi (ASTM A36).

Available Flexural Strength of HSS

Table 3-12. Rectangular HSS—Available Flexural Strength

The available flexural strength is tabulated for rectangular HSS with $F_y = 46$ ksi (ASTM A500 Grade B) as determined by AISC *Specification* Section F7. For noncompact and slender cross sections, the tabulated values of M_n/Ω_b and $\phi_b M_n$ have been adjusted to account for the noncompactness or slenderness.

Table 3-13. Square HSS—Available Flexural Strength

Table 3-13 is similar to Table 3-12, except it covers square HSS with $F_y = 46$ ksi (ASTM A500 Grade B).

Table 3-14. Round HSS—Available Flexural Strength

Table 3-14 is similar to Table 3-12, except it covers round HSS with $F_y = 42$ ksi (ASTM A500 Grade B) and the available flexural strength is determined from AISC *Specification* Section F8.

Table 3-15. Pipe—Available Flexural Strength

Table 3-15 is similar to Table 3-14, except it covers Pipe with $F_y = 35$ ksi (ASTM A53 Grade B).

Strength of Other Flexural Members

Tables 3-16 and 3-17. Available Shear Stress in Plate Girders

The available shear stress for plate girders is plotted as a function of a/h and h/t_w in Tables 3-16 (for $F_y = 36$ ksi) and 3-17 (for $F_y = 50$ ksi). In part a of each table, tension field action is neglected. In part b of each table, tension field action is considered.

Table 3-18. Floor Plates

The recommended maximum uniformly distributed loads are given in Table 3-18 based upon simple-span bending between supports. Table 3-18a is for deflection-controlled applications and should be used with the appropriate serviceability load combinations. The tabulated values correspond to a maximum deflection of $L/100$. Table 3-18b is for flexural-strength-controlled applications and should be used with LRFD or ASD load combinations. The tabulated values correspond to a maximum bending stress of 24 ksi in LRFD and 16 ksi in ASD.

Composite Beam Selection Tables

Table 3-19. Composite W-Shapes

The available flexural strength is tabulated for W-shapes with $F_y = 50$ ksi (ASTM A992). The values tabulated are independent of the specific concrete flange properties allowing the designer to select an appropriate combination of concrete strength and slab geometry.

The location of the plastic neutral axis (PNA) is uniquely determined by the horizontal shear force, ΣQ_n, at the interface between the steel section and the concrete slab. With the knowledge of the location of the PNA and the distance to the centroid of the concrete flange force, ΣQ_n, the available flexural strength can be computed.

Available flexural strengths are tabulated for PNA locations at the seven locations shown. Five of these PNA locations are in the beam flange. The seventh PNA location is computed

at the point where ΣQ_n equals $0.25F_yA_s$, and the sixth PNA location is halfway between the location of ΣQ_n at point five and point seven. Use of beams with a PNA below location seven is discouraged.

Table 3-19 can be used to design a composite beam by entering with a required flexural strength and determining the corresponding required ΣQ_n. Alternatively, Table 3-19 can be used to check the flexural strength of a composite beam by selecting a valid value of ΣQ_n, using Table 3-21. With the effective width of the concrete flange, b, determined per AISC *Specification* Section I3.1a, the appropriate value of the distance from concrete flange force to beam top flange, $Y2$, can be determined as

$$Y2 = Y_{con} - \frac{a}{2} \tag{3-6}$$

where

Y_{con} = distance from top of steel beam to top of concrete, in.

$$a = \frac{\Sigma Q_n}{0.85 f_c' b} \tag{3-7}$$

and the available flexural strength, $\phi_b M_n$ or M_n/Ω_b, can then be determined from Table 3-19. Values for the distance from the PNA to the beam top flange, $Y1$, are also tabulated for convenience. The parameters $Y1$ and $Y2$ are illustrated in Figure 3-3. Note that the model of the steel beam used in the calculation of the available strength assumes that

A_s = cross-sectional area of the steel section, in.^{2}
A_f = flange area, in.^{2} = $b_f t_f$
A_w = web area, in.^{2} = $(d - 2k)t_w$
K_{dep} = $k - t_f$, in.
K_{area} = $(A_s - 2A_f - A_w)/2$, in.^{2}

Table 3-20. Lower-Bound Elastic Moment of Inertia

The lower-bound elastic moment of inertia of a composite beam can be used to calculate deflection. If calculated deflections using the lower-bound moment of inertia are acceptable, a more complete elastic analysis of the composite section can be avoided. The lower-bound elastic moment of inertia is based upon the area of the beam and an equivalent concrete area equal to $\Sigma Q_n/F_y$ as illustrated in Figure 3-4, where F_y = 50 ksi. The analysis includes only the horizontal shear force transferred by the steel anchors supplied. Thus, only the portion of the concrete flange used to balance ΣQ_n is included in the determination of the lower-bound moment of inertia.

The lower bound moment of inertia, therefore, is the moment of inertia of the cross section at the required strength level. This is smaller than the corresponding moment of inertia at the service load where deflection is calculated. The value for the lower bound moment of inertia can be calculated as illustrated in AISC *Specification* Commentary Section I3.2.

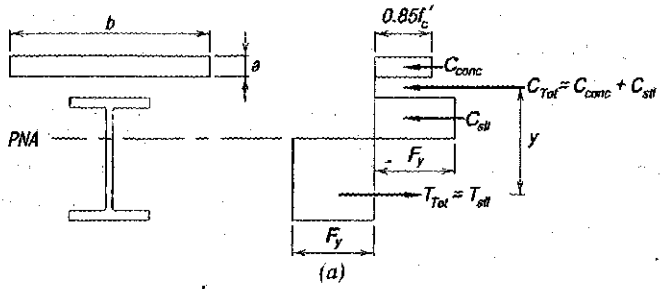

(a)

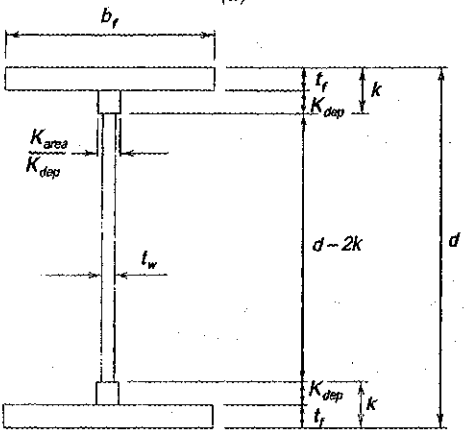

(b)

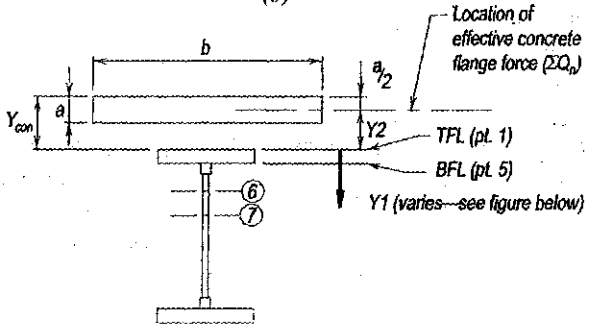

Y1 = Distance from top of steel flange to any of the seven tabulated PNA locations

$$\Sigma Q_n \text{ (@ point 6)} = \frac{\Sigma Q_n \text{ (@ pt. 5)} + \Sigma Q_n \text{ (@ pt. 7)}}{2}$$

$$\Sigma Q_n \text{ (@ point 7)} = 0.25 F_y A_s$$

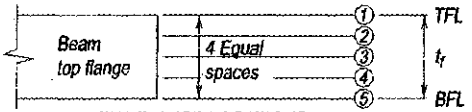

PNA FLANGE LOCATIONS

(c)

Fig. 3-3. Strength design models for composite beams.

Table 3-21. Nominal Horizontal Shear Strength for One Steel Headed Stud Anchor, Q_n

The nominal shear strength of steel headed stud anchors is given in Table 3-21, in accordance with AISC *Specification* Chapter I. Nominal horizontal shear strength values are presented based upon the position of the steel anchor, profile of the deck, and orientation of the deck relative to the steel anchor. See AISC *Specification* Commentary Figure C-I8.1.

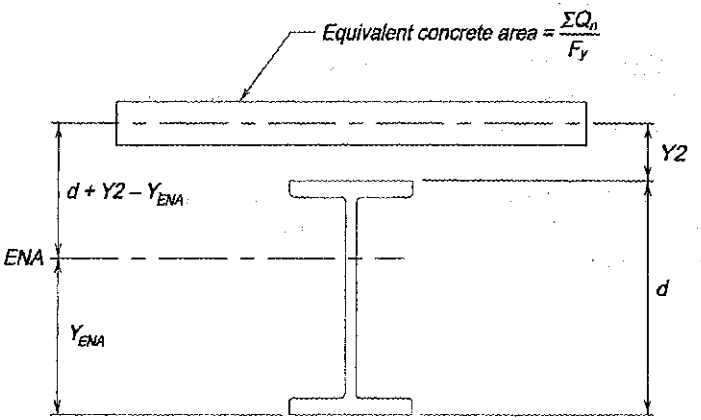

Fig. 3-4. Deflection design model for composite beams.

Beam Diagrams and Formulas

Table 3-22a. Concentrated Load Equivalents

Concentrated load equivalents are given in Table 3-22a for beams with various support conditions and loading characteristics.

Table 3-22b. Cantilevered Beams

Coefficients are provided in Table 3-22b for cantilevered beams with various support conditions and loading characteristics.

Table 3-22c. Continuous Beams

Coefficients are provided in Table 3-22c for continuous beams with various support conditions and loading characteristics.

Table 3-23. Shears, Moments and Deflections

Shears, moments and deflections are given in Table 3-23 for beams with various support conditions and loading characteristics.

PART 3 REFERENCES

Allison, H.R. (1991), *Low- and Medium-Rise Steel Buildings*, Design Guide 5, American Institute for Steel Construction, Chicago, IL.

Murray, T.M., Allen, D.E. and Ungar, E.E. (1997), *Floor Vibrations Due to Human Activity*, Design Guide 11, American Institute for Steel Construction, Chicago, IL.

Viest, I.M., Colaco, J.P., Furlong, R.W., Griffis, L.G., Leon, R.T. and Wyllie, L.A., Jr. (1997), *Composite Construction: Design for Buildings*, McGraw-Hill, New York, NY.

West, M.A. and Fisher, J.M. (2003), *Serviceability Design Considerations for Steel Buildings*, Design Guide 3, 2nd Ed., American Institute of Steel Construction, Chicago, IL.

Table 3-1
Values of C_b for Simply Supported Beams

Load	Lateral Bracing Along Span	C_b
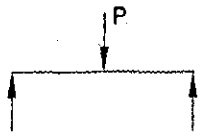	None Load at midpoint	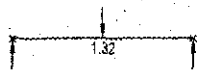
	At load point	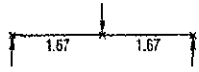
	None Loads at third points	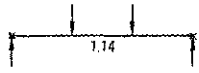
	At load points Loads symmetrically placed	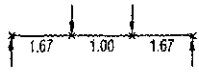
	None Loads at quarter points	
	At load points Loads at quarter points	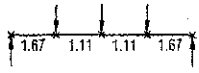
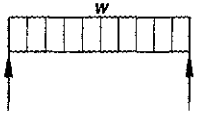	None	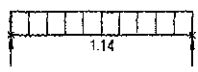
	At midpoint	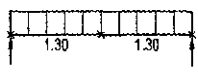
	At third points	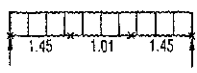
	At quarter points	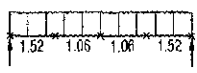
	At fifth points	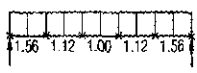

Note: Lateral bracing must always be provided at points of support per AISC *Specification* Chapter F.

F_y = 50 ksi

Table 3-2
W-Shapes
Selection by Z_x

Z_x

Shape	Z_x	M_{px}/Ω_b	$\phi_b M_{px}$	M_{rx}/Ω_b	$\phi_b M_{rx}$	BF/Ω_b	$\phi_b BF$	L_p	L_r	I_x	V_{nx}/Ω_v	$\phi_v V_{nx}$
		kip-ft	kip-ft	kip-ft	kip-ft	kips	kips				kips	kips
	in.[3]	ASD	LRFD	ASD	LRFD	ASD	LRFD	ft	ft	in.[4]	ASD	LRFD
W36×652[b]	2910	7260	10900	4300	6460	46.8	70.3	14.5	77.7	50600	1620	2430
W40×593[b]	2760	6890	10400	4090	6140	55.4	84.4	13.4	63.9	50400	1540	2310
W36×529[b]	2330	5810	8740	3480	5220	46.4	70.1	14.1	64.3	39600	1280	1920
W40×503[b]	2320	5790	8700	3460	5200	55.3	83.1	13.1	55.2	41600	1300	1950
W36×487[b]	2130	5310	7990	3200	4800	46.0	69.5	14.0	59.9	36000	1180	1770
W40×431[b]	1960	4890	7350	2950	4440	53.6	80.4	12.9	49.1	34800	1110	1660
W36×441[b]	1910	4770	7160	2880	4330	45.3	67.9	13.8	55.5	32100	1060	1590
W27×539[b]	1890	4720	7090	2740	4120	26.2	39.3	12.9	88.5	25600	1280	1920
W40×397[b]	1800	4490	6750	2720	4100	52.4	78.4	12.9	46.7	32000	1000	1500
W40×392[b]	1710	4270	6410	2510	3780	60.8	90.8	9.33	36.3	29900	1180	1770
W36×395[b]	1710	4270	6410	2600	3910	44.9	67.2	13.7	50.9	28500	937	1410
W40×372[b]	1680	4190	6300	2550	3830	51.7	77.9	12.7	44.4	29600	942	1410
W14×730[b]	1660	4140	6230	2240	3360	7.35	11.1	16.6	275	14300	1380	2060
W40×362[b]	1640	4090	6150	2480	3730	51.4	77.3	12.7	44.0	28900	909	1360
W44×335	1620	4040	6080	2460	3700	59.4	89.5	12.3	38.9	31100	906	1360
W33×387[b]	1560	3890	5850	2360	3540	38.3	57.8	13.3	53.3	24300	907	1360
W36×361[b]	1550	3870	5810	2360	3540	43.6	65.6	13.6	48.2	25700	851	1280
W14×665[b]	1480	3690	5550	2010	3020	7.10	10.7	16.3	253	12400	1220	1830
W40×324	1460	3640	5480	2240	3360	49.0	74.1	12.6	41.2	25600	804	1210
W30×391[b]	1450	3620	5440	2180	3280	31.4	47.2	13.0	58.8	20700	903	1350
W40×331[b]	1430	3570	5360	2110	3180	59.1	88.2	9.08	33.8	24700	996	1490
W33×354[b]	1420	3540	5330	2170	3260	37.4	56.6	13.2	49.8	22000	826	1240
W44×290	1410	3520	5290	2170	3260	54.9	82.5	12.3	36.9	27000	754	1130
W40×327[b]	1410	3520	5290	2100	3150	58.0	87.4	9.11	33.6	24500	963	1440
W36×330	1410	3520	5290	2170	3260	42.2	63.4	13.5	45.5	23300	769	1150
W40×297	1330	3320	4990	2040	3070	47.8	71.6	12.5	39.3	23200	740	1110
W30×357[b]	1320	3290	4950	1990	2990	31.3	47.2	12.9	54.4	18700	813	1220
W14×605[b]	1320	3290	4950	1820	2730	6.81	10.3	16.1	232	10800	1090	1630
W36×302	1280	3190	4800	1970	2970	40.5	60.8	13.5	43.6	21100	705	1060

ASD	LRFD
Ω_b = 1.67	ϕ_b = 0.90
Ω_v = 1.50	ϕ_v = 1.00

[b] Flange thickness greater than 2 in. Special requirements may apply per AISC *Specification* Section A3.1c.

Z_x

Table 3-2 (continued)
W-Shapes
Selection by Z_x

F_y = 50 ksi

Shape	Z_x	M_{px}/Ω_b	$\phi_b M_{px}$	M_{rx}/Ω_b	$\phi_b M_{rx}$	BF/Ω_b	$\phi_b BF$	L_p	L_r	I_x	V_{nx}/Ω_v	$\phi_v V_{nx}$
		kip-ft	kip-ft	kip-ft	kip-ft	kips	kips				kips	kips
	in.^{3}	ASD	LRFD	ASD	LRFD	ASD	LRFD	ft	ft	in.^{4}	ASD	LRFD
W44×262	**1270**	**3170**	**4760**	**1940**	**2910**	**52.6**	**79.1**	**12.3**	**35.7**	**24100**	**680**	**1020**
W40×294	1270	3170	4760	1890	2840	56.9	85.4	9.01	31.5	21900	856	1280
W33×318	1270	3170	4760	1940	2910	36.8	55.4	13.1	46.5	19500	732	1100
W40×277	1250	3120	4690	1920	2890	45.8	68.7	12.6	38.8	21900	659	989
W27×368[h]	1240	3090	4650	1850	2780	24.9	37.6	12.3	62.0	16200	839	1260
W40×278	1190	2970	4460	1780	2680	55.3	82.8	8.90	30.4	20500	828	1240
W36×282	1190	2970	4460	1830	2760	39.6	59.0	13.4	42.2	19600	657	985
W30×326[h]	1190	2970	4460	1820	2730	30.3	45.6	12.7	50.6	16800	739	1110
W14×550[h]	1180	2940	4430	1630	2440	6.65	10.1	15.9	213	9430	962	1440
W33×291	1160	2890	4350	1780	2680	36.0	54.2	13.0	43.8	17700	668	1000
W40×264	1130	2820	4240	1700	2550	53.8	81.3	8.90	29.7	19400	768	1150
W27×336[h]	1130	2820	4240	1700	2550	25.0	37.7	12.2	57.0	14600	756	1130
W24×370[h]	1130	2820	4240	1670	2510	20.0	30.0	11.6	69.2	13400	851	1280
W40×249	**1120**	**2790**	**4200**	**1730**	**2610**	**42.9**	**64.4**	**12.5**	**37.2**	**19600**	**591**	**887**
W44×230[v]	**1100**	**2740**	**4130**	**1700**	**2550**	**46.8**	**71.2**	**12.1**	**34.3**	**20800**	**547**	**822**
W36×262	1100	2740	4130	1700	2550	38.1	57.9	13.3	40.6	17900	620	930
W30×292	1060	2640	3980	1620	2440	29.7	44.9	12.6	46.9	14900	653	979
W14×500[h]	1050	2620	3940	1460	2200	6.43	9.65	15.6	196	8210	858	1290
W36×256	1040	2590	3900	1560	2350	46.5	70.0	9.36	31.5	16800	718	1080
W33×263	1040	2590	3900	1610	2410	34.1	51.9	12.9	41.6	15900	600	900
W36×247	1030	2570	3860	1590	2400	37.4	55.7	13.2	39.4	16700	587	881
W27×307[h]	1030	2570	3860	1550	2330	25.1	37.7	12.0	52.6	13100	687	1030
W24×335[h]	1020	2540	3830	1510	2270	19.9	30.2	11.4	63.1	11900	759	1140
W40×235	1010	2520	3790	1530	2300	51.0	76.7	8.97	28.4	17400	659	989
W40×215	**964**	**2410**	**3620**	**1500**	**2250**	**39.4**	**59.3**	**12.5**	**35.6**	**16700**	**507**	**761**
W36×231	963	2400	3610	1490	2240	35.7	53.7	13.1	38.6	15600	555	832
W30×261	943	2350	3540	1450	2180	29.1	44.0	12.5	43.4	13100	588	882
W33×241	940	2350	3530	1450	2180	33.5	50.2	12.8	39.7	14200	568	852
W36×232	936	2340	3510	1410	2120	44.8	67.0	9.25	30.0	15000	646	968
W27×281	936	2340	3510	1420	2140	24.8	36.9	12.0	49.1	11900	621	932
W14×455[h]	936	2340	3510	1320	1980	6.24	9.36	15.5	179	7190	768	1150
W24×306[h]	922	2300	3460	1380	2070	19.7	29.8	11.3	57.9	10700	683	1020
W40×211	**906**	**2260**	**3400**	**1370**	**2060**	**48.6**	**73.1**	**8.87**	**27.2**	**15500**	**591**	**887**

ASD	LRFD
$\Omega_b = 1.67$	$\phi_b = 0.90$
$\Omega_v = 1.50$	$\phi_v = 1.00$

[h] Flange thickness greater than 2 in. Special requirements may apply per AISC *Specification* Section A3.1c.

[v] Shape does not meet the h/t_w limit for shear in AISC *Specification* Section G2.1(a) with F_y = 50 ksi; therefore, $\phi_v = 0.90$ and $\Omega_v = 1.67$.

Table 3-2 (continued)

W-Shapes

Selection by Z_x

F_y = 50 ksi

Z_x

Shape	Z_x	M_{px}/Ω_b	$\phi_b M_{px}$	M_{rx}/Ω_b	$\phi_b M_{rx}$	BF/Ω_b	$\phi_b BF$	L_p	L_r	I_x	V_{nx}/Ω_v	$\phi_v V_{nx}$
		kip-ft	kip-ft	kip-ft	kip-ft	kips	kips				kips	kips
	in.^{3}	ASD	LRFD	ASD	LRFD	ASD	LRFD	ft	ft	in.^{4}	ASD	LRFD
W40×199	**869**	**2170**	**3260**	**1340**	**2020**	**37.6**	**56.1**	**12.2**	**34.3**	**14900**	**503**	**755**
W14×426[h]	869	2170	3260	1230	1850	6.16	9.23	15.3	168	6600	703	1050
W33×221	857	2140	3210	1330	1990	31.8	47.8	12.7	38.2	12900	525	788
W27×258	852	2130	3200	1300	1960	24.4	36.5	11.9	45.9	10800	568	853
W30×235	847	2110	3180	1310	1960	28.0	42.7	12.4	41.0	11700	520	779
W24×279[h]	835	2080	3130	1250	1880	19.7	29.6	11.2	53.4	9600	619	929
W36×210	833	2080	3120	1260	1890	42.3	63.4	9.11	28.5	13200	609	914
W14×398[h]	801	2000	3000	1150	1720	5.95	8.96	15.2	158	6000	648	972
W40×183	**774**	**1930**	**2900**	**1180**	**1770**	**44.1**	**66.5**	**8.80**	**25.8**	**13200**	**507**	**761**
W33×201	773	1930	2900	1200	1800	30.3	45.6	12.6	36.7	11600	482	723
W27×235	772	1930	2900	1180	1780	24.1	36.0	11.8	42.9	9700	522	784
W36×194	767	1910	2880	1160	1740	40.4	61.4	9.04	27.6	12100	558	838
W18×311[h]	754	1880	2830	1090	1640	11.2	16.8	10.4	81.1	6970	678	1020
W30×211	751	1870	2820	1160	1750	26.9	40.5	12.3	38.7	10300	479	718
W24×250	744	1860	2790	1120	1690	19.7	29.3	11.1	48.7	8490	547	821
W14×370[h]	736	1840	2760	1060	1590	5.87	8.80	15.1	148	5440	594	891
W36×182	**718**	**1790**	**2690**	**1090**	**1640**	**38.9**	**58.4**	**9.01**	**27.0**	**11300**	**526**	**790**
W27×217	711	1770	2670	1100	1650	23.0	35.1	11.7	40.8	8910	471	707
W40×167	**693**	**1730**	**2600**	**1050**	**1580**	**41.7**	**62.5**	**8.48**	**24.8**	**11600**	**502**	**753**
W18×283[h]	676	1690	2540	987	1480	11.1	16.7	10.3	73.6	6170	613	920
W30×191	675	1680	2530	1050	1580	25.6	38.6	12.2	36.8	9200	436	654
W24×229	675	1680	2530	1030	1540	19.0	28.9	11.0	45.2	7650	499	749
W14×342[h]	672	1680	2520	975	1460	5.73	8.62	15.0	138	4900	539	809
W36×170	668	1670	2510	1010	1530	37.8	56.1	8.94	26.4	10500	492	738
W27×194	631	1570	2370	976	1470	22.3	33.8	11.6	38.2	7860	422	632
W33×169	629	1570	2360	959	1440	34.2	51.5	8.83	26.7	9290	453	679
W36×160	**624**	**1560**	**2340**	**947**	**1420**	**36.1**	**54.2**	**8.83**	**25.8**	**9760**	**468**	**702**
W18×258[h]	611	1520	2290	898	1350	10.9	16.5	10.2	67.3	5510	550	826
W30×173	607	1510	2280	945	1420	24.1	36.8	12.1	35.5	8230	398	597
W24×207	606	1510	2270	927	1390	18.9	28.6	10.9	41.7	6820	447	671
W14×311[h]	603	1500	2260	884	1330	5.59	8.44	14.8	125	4330	482	723
W12×336[h]	603	1500	2260	844	1270	4.76	7.19	12.3	150	4060	598	897

ASD	LRFD
Ω_b = 1.67	ϕ_b = 0.90
Ω_v = 1.50	ϕ_v = 1.00

[h] Flange thickness greater than 2 in. Special requirements may apply per AISC *Specification* Section A3.1c.

Z_x

Table 3-2 (continued)
W-Shapes
Selection by Z_x

$F_y = 50$ ksi

Shape	Z_x	M_{px}/Ω_b	$\phi_b M_{px}$	M_{rx}/Ω_b	$\phi_b M_{rx}$	BF/Ω_b	$\phi_b BF$	L_p	L_r	I_x	V_{nx}/Ω_v	$\phi_v V_{nx}$
		kip-ft	kip-ft	kip-ft	kip-ft	kips	kips				kips	kips
	in.^{3}	ASD	LRFD	ASD	LRFD	ASD	LRFD	ft	ft	in.^{4}	ASD	LRFD
W40×149[v]	**598**	**1490**	**2240**	**896**	**1350**	**38.3**	**57.4**	**8.09**	**23.6**	**9800**	**432**	**650**
W36×150	581	1450	2180	880	1320	34.4	51.9	8.72	25.3	9040	449	673
W27×178	570	1420	2140	882	1330	21.6	32.5	11.5	36.4	7020	403	605
W33×152	559	1390	2100	851	1280	31.7	48.3	8.72	25.7	8160	425	638
W24×192	559	1390	2100	858	1290	18.4	28.0	10.8	39.7	6260	413	620
W18×234[h]	549	1370	2060	814	1220	10.8	16.4	10.1	61.4	4900	490	734
W14×283[h]	542	1350	2030	802	1200	5.52	8.36	14.7	114	3840	431	646
W12×305[h]	537	1340	2010	760	1140	4.64	6.97	12.1	137	3550	531	797
W21×201	530	1320	1990	805	1210	14.5	22.0	10.7	46.2	5310	419	628
W27×161	515	1280	1930	800	1200	20.6	31.3	11.4	34.7	6310	364	546
W33×141	**514**	**1280**	**1930**	**782**	**1180**	**30.3**	**45.7**	**8.58**	**25.0**	**7450**	**403**	**604**
W24×176	511	1270	1920	786	1180	18.1	27.7	10.7	37.4	5680	378	567
W36×135[v]	**509**	**1270**	**1910**	**767**	**1150**	**31.7**	**47.8**	**8.41**	**24.3**	**7800**	**384**	**577**
W30×148	500	1250	1880	761	1140	29.0	43.9	8.05	24.9	6680	399	599
W18×211	490	1220	1840	732	1100	10.7	16.2	9.96	55.7	4330	439	658
W14×257	487	1220	1830	725	1090	5.54	8.28	14.6	104	3400	387	581
W12×279[h]	481	1200	1800	686	1030	4.50	6.75	11.9	126	3110	487	730
W21×182	476	1190	1790	728	1090	14.4	21.8	10.6	42.7	4730	377	565
W24×162	468	1170	1760	723	1090	17.9	26.8	10.8	35.8	5170	353	529
W33×130	**467**	**1170**	**1750**	**709**	**1070**	**29.3**	**43.1**	**8.44**	**24.2**	**6710**	**384**	**576**
W27×146	464	1160	1740	723	1090	19.9	29.5	11.3	33.3	5660	332	497
W18×192	442	1100	1660	664	998	10.6	16.1	9.85	51.0	3870	392	588
W30×132	437	1090	1640	664	998	26.9	40.5	7.95	23.8	5770	373	559
W14×233	436	1090	1640	655	984	5.40	8.15	14.5	95.0	3010	342	514
W21×166	432	1080	1620	664	998	14.2	21.2	10.6	39.9	4280	338	506
W12×252[h]	428	1070	1610	617	927	4.43	6.68	11.8	114	2720	431	647
W24×146	418	1040	1570	648	974	17.0	25.8	10.6	33.7	4580	321	482
W33×118[v]	**415**	**1040**	**1560**	**627**	**942**	**27.2**	**40.6**	**8.19**	**23.4**	**5900**	**325**	**489**
W30×124	408	1020	1530	620	932	26.1	39.0	7.88	23.2	5360	353	530
W18×175	398	993	1490	601	903	10.6	15.8	9.75	46.9	3450	356	534
W27×129	395	986	1480	603	906	23.4	35.0	7.81	24.2	4760	337	505
W14×211	390	973	1460	590	887	5.30	7.94	14.4	86.6	2660	308	462
W12×230[h]	386	963	1450	561	843	4.31	6.51	11.7	105	2420	390	584

ASD	LRFD
$\Omega_b = 1.67$ $\Omega_v = 1.50$	$\phi_b = 0.90$ $\phi_v = 1.00$

[h] Flange thickness greater than 2 in. Special requirements may apply per AISC *Specification* Section A3.1c.

[v] Shape does not meet the h/t_w limit for shear in AISC *Specification* Section G2.1(a) with $F_y = 50$ ksi; therefore, $\phi_v = 0.90$ and $\Omega_v = 1.67$.

Table 3-2 (continued)
W-Shapes
Selection by Z_x

$F_y = 50$ ksi

Z_x

Shape	Z_x	M_{px}/Ω_b	$\phi_b M_{px}$	M_{rx}/Ω_b	$\phi_b M_{rx}$	BF/Ω_b	$\phi_b BF$	L_p	L_r	I_x	V_{nx}/Ω_v	$\phi_v V_{nx}$
		kip-ft	kip-ft	kip-ft	kip-ft	kips	kips				kips	kips
	in.^{3}	ASD	LRFD	ASD	LRFD	ASD	LRFD	ft	ft	in.^{4}	ASD	LRFD
W30×116	**378**	**943**	**1420**	**575**	**864**	**24.8**	**37.4**	**7.74**	**22.6**	**4930**	**339**	**509**
W21×147	373	931	1400	575	864	13.7	20.7	10.4	36.3	3630	318	477
W24×131	370	923	1390	575	864	16.3	24.6	10.5	31.9	4020	296	445
W18×158	356	888	1340	541	814	10.5	15.9	9.68	42.8	3060	319	479
W14×193	355	886	1330	541	814	5.30	7.93	14.3	79.4	2400	276	414
W12×210	348	868	1310	510	767	4.25	6.45	11.6	95.8	2140	347	520
W30×108	**346**	**863**	**1300**	**522**	**785**	**23.5**	**35.5**	**7.59**	**22.1**	**4470**	**325**	**487**
W27×114	343	856	1290	522	785	21.7	32.8	7.70	23.1	4080	311	467
W21×132	333	831	1250	515	774	13.2	19.9	10.3	34.2	3220	283	425
W24×117	327	816	1230	508	764	15.4	23.3	10.4	30.4	3540	267	401
W18×143	322	803	1210	493	740	10.3	15.7	9.61	39.6	2750	285	427
W14×176	320	798	1200	491	738	5.20	7.83	14.2	73.2	2140	252	378
W30×99	**312**	**778**	**1170**	**470**	**706**	**22.2**	**33.4**	**7.42**	**21.3**	**3990**	**309**	**463**
W12×190	311	776	1170	459	690	4.18	6.33	11.5	87.3	1890	305	458
W21×122	307	766	1150	477	717	12.9	19.3	10.3	32.7	2960	260	391
W27×102	305	761	1140	466	701	20.1	29.8	7.59	22.3	3620	279	419
W18×130	290	724	1090	447	672	10.2	15.4	9.54	36.6	2460	259	388
W24×104	289	721	1080	451	677	14.3	21.3	10.3	29.2	3100	241	362
W14×159	287	716	1080	444	667	5.17	7.85	14.1	66.7	1900	224	335
W30×90[v]	**283**	**706**	**1060**	**428**	**643**	**20.6**	**30.8**	**7.38**	**20.9**	**3610**	**249**	**374**
W24×103	280	699	1050	428	643	18.2	27.4	7.03	21.9	3000	270	404
W21×111	279	696	1050	435	654	12.4	18.9	10.2	31.2	2670	237	355
W27×94	278	694	1040	424	638	19.1	28.5	7.49	21.6	3270	264	395
W12×170	275	686	1030	410	617	4.11	6.15	11.4	78.5	1650	269	403
W18×119	262	654	983	403	606	10.1	15.2	9.50	34.3	2190	249	373
W14×145	260	649	975	405	609	5.13	7.69	14.1	61.7	1710	201	302
W24×94	254	634	953	388	583	17.3	26.0	6.99	21.2	2700	250	375
W21×101	253	631	949	396	596	11.8	17.7	10.2	30.1	2420	214	321
W27×84	**244**	**609**	**915**	**372**	**559**	**17.6**	**26.4**	**7.31**	**20.8**	**2850**	**246**	**368**
W12×152	243	606	911	365	549	4.06	6.10	11.3	70.6	1430	238	358
W14×132	234	584	878	365	549	5.15	7.74	13.3	55.8	1530	190	284
W18×106	230	574	863	356	536	9.73	14.6	9.40	31.8	1910	221	331

ASD	LRFD
$\Omega_b = 1.67$	$\phi_b = 0.90$
$\Omega_v = 1.50$	$\phi_v = 1.00$

[v] Shape does not meet the h/t_w limit for shear in AISC *Specification* Section G2.1(a) with $F_y = 50$ ksi; therefore, $\phi_v = 0.90$ and $\Omega_v = 1.67$.

Z_x

Table 3-2 (continued)
W-Shapes
Selection by Z_x

$F_y = 50$ ksi

Shape	Z_x	M_{px}/Ω_b	$\phi_b M_{px}$	M_{rx}/Ω_b	$\phi_b M_{rx}$	BF/Ω_b	$\phi_b BF$	L_p	L_r	I_x	V_{nx}/Ω_v	$\phi_v V_{nx}$
		kip-ft	kip-ft	kip-ft	kip-ft	kips	kips				kips	kips
	in.^{3}	ASD	LRFD	ASD	LRFD	ASD	LRFD	ft	ft	in.^{4}	ASD	LRFD
W24×84	**224**	**559**	**840**	**342**	**515**	**16.2**	**24.2**	**6.89**	**20.3**	**2370**	**227**	**340**
W21×93	221	551	829	335	504	14.6	22.0	6.50	21.3	2070	251	376
W12×136	214	534	803	325	488	4.02	6.06	11.2	63.2	1240	212	318
W14×120	212	529	795	332	499	5.09	7.65	13.2	51.9	1380	171	257
W18×97	211	526	791	328	494	9.41	14.1	9.36	30.4	1750	199	299
W24×76	**200**	**499**	**750**	**307**	**462**	**15.1**	**22.6**	**6.78**	**19.5**	**2100**	**210**	**315**
W16×100	198	494	743	306	459	7.86	11.9	8.87	32.8	1490	199	298
W21×83	196	489	735	299	449	13.8	20.8	6.46	20.2	1830	220	331
W14×109	192	479	720	302	454	5.01	7.54	13.2	48.5	1240	150	225
W18×86	186	464	698	290	436	9.01	13.6	9.29	28.6	1530	177	265
W12×120	186	464	698	285	428	3.94	5.95	11.1	56.5	1070	186	279
W24×68	**177**	**442**	**664**	**269**	**404**	**14.1**	**21.2**	**6.61**	**18.9**	**1830**	**197**	**295**
W16×89	175	437	656	271	407	7.76	11.6	8.80	30.2	1300	176	265
W14×99[1]	173	430	646	274	412	4.97	7.36	13.5	45.3	1110	138	207
W21×73	172	429	645	264	396	12.9	19.4	6.39	19.2	1600	193	289
W12×106	164	409	615	253	381	3.93	5.89	11.0	50.7	933	157	236
W18×76	163	407	611	255	383	8.50	12.8	9.22	27.1	1330	155	232
W21×68	**160**	**399**	**600**	**245**	**368**	**12.5**	**18.8**	**6.36**	**18.7**	**1480**	**181**	**272**
W14×90[1]	157	382	574	250	375	4.82	7.26	15.1	42.5	999	123	185
W24x62	**153**	**382**	**574**	**229**	**344**	**16.1**	**24.1**	**4.87**	**14.4**	**1550**	**204**	**306**
W16×77	150	374	563	234	352	7.34	11.1	8.72	27.8	1110	150	225
W12×96	147	367	551	229	344	3.85	5.78	10.9	46.7	833	140	210
W10×112	147	367	551	220	331	2.69	4.03	9.47	64.1	716	172	258
W18×71	146	364	548	222	333	10.4	15.8	6.00	19.6	1170	183	275
W21×62	**144**	**359**	**540**	**222**	**333**	**11.6**	**17.5**	**6.25**	**18.1**	**1330**	**168**	**252**
W14×82	139	347	521	215	323	5.40	8.10	8.76	33.2	881	146	219
W24×55[2]	**134**	**334**	**503**	**199**	**299**	**14.7**	**22.2**	**4.73**	**13.9**	**1350**	**167**	**252**
W18×65	133	332	499	204	307	9.98	15.0	5.97	18.8	1070	166	248
W12×87	132	329	495	206	310	3.81	5.73	10.8	43.1	740	129	193
W16×67	130	324	488	204	307	6.89	10.4	8.69	26.1	954	129	193
W10×100	130	324	488	196	294	2.64	4.00	9.36	57.9	623	151	226
W21×57	129	322	484	194	291	13.4	20.3	4.77	14.3	1170	171	256

ASD	LRFD
$\Omega_b = 1.67$ $\Omega_v = 1.50$	$\phi_b = 0.90$ $\phi_v = 1.00$

[1] Shape exceeds compact limit for flexure with $F_y = 50$ ksi.
[2] Shape does not meet the h/t_w limit for shear in AISC *Specification* Section G2.1(a) with $F_y = 50$ ksi; therefore, $\phi_v = 0.90$ and $\Omega_v = 1.67$.

Table 3-2 (continued)
W-Shapes
Selection by Z_x

F_y = 50 ksi

Z_x

Shape	Z_x	M_{px}/Ω_b	$\phi_b M_{px}$	M_{rx}/Ω_b	$\phi_b M_{rx}$	BF/Ω_b	$\phi_b BF$	L_p	L_r	I_x	V_{nx}/Ω_v	$\phi_v V_{nx}$
		kip-ft	kip-ft	kip-ft	kip-ft	kips	kips				kips	kips
	in.^{3}	ASD	LRFD	ASD	LRFD	ASD	LRFD	ft	ft	in.^{4}	ASD	LRFD
W21×55	**126**	**314**	**473**	**192**	**289**	**10.8**	**16.3**	**6.11**	**17.4**	**1140**	**156**	**234**
W14×74	126	314	473	196	294	5.31	8.05	8.76	31.0	795	128	192
W18×60	123	307	461	189	284	9.62	14.4	5.93	18.2	984	151	227
W12×79	119	297	446	187	281	3.78	5.67	10.8	39.9	662	117	175
W14×68	115	287	431	180	270	5.19	7.81	8.69	29.3	722	116	174
W10×88	113	282	424	172	259	2.62	3.94	9.29	51.2	534	131	196
W18×55	**112**	**279**	**420**	**172**	**258**	**9.15**	**13.8**	**5.90**	**17.6**	**890**	**141**	**212**
W21×50	**110**	**274**	**413**	**165**	**248**	**12.1**	**18.3**	**4.59**	**13.6**	**984**	**158**	**237**
W12×72	108	269	405	170	256	3.69	5.56	10.7	37.5	597	106	159
W21×48[1]	**107**	**265**	**398**	**162**	**244**	**9.89**	**14.8**	**6.09**	**16.5**	**959**	**144**	**216**
W16×57	105	262	394	161	242	7.98	12.0	5.65	18.3	758	141	212
W14×61	102	254	383	161	242	4.93	7.48	8.65	27.5	640	104	156
W18×50	101	252	379	155	233	8.76	13.2	5.83	16.9	800	128	192
W10×77	97.6	244	366	150	225	2.60	3.90	9.18	45.3	455	112	169
W12×65[1]	96.8	237	356	154	231	3.58	5.39	11.9	35.1	533	94.4	142
W21×44	**95.4**	**238**	**358**	**143**	**214**	**11.1**	**16.8**	**4.45**	**13.0**	**843**	**145**	**217**
W16×50	92.0	230	345	141	213	7.69	11.4	5.62	17.2	659	124	186
W18×46	90.7	226	340	138	207	9.63	14.6	4.56	13.7	712	130	195
W14×53	87.1	217	327	136	204	5.22	7.93	6.78	22.3	541	103	154
W12×58	86.4	216	324	136	205	3.82	5.69	8.87	29.8	475	87.8	132
W10×68	85.3	213	320	132	199	2.58	3.85	9.15	40.6	394	97.8	147
W16×45	82.3	205	309	127	191	7.12	10.8	5.55	16.5	586	111	167
W18×40	**78.4**	**196**	**294**	**119**	**180**	**8.94**	**13.2**	**4.49**	**13.1**	**612**	**113**	**169**
W14×48	78.4	196	294	123	184	5.09	7.67	6.75	21.1	484	93.8	141
W12×53	77.9	194	292	123	185	3.65	5.50	8.76	28.2	425	83.5	125
W10×60	74.6	186	280	116	175	2.54	3.82	9.08	36.6	341	85.7	129
W16×40	**73.0**	**182**	**274**	**113**	**170**	**6.67**	**10.0**	**5.55**	**15.9**	**518**	**97.6**	**146**
W12×50	71.9	179	270	112	169	3.97	5.98	6.92	23.8	391	90.3	135
W8×67	70.1	175	263	105	159	1.75	2.59	7.49	47.6	272	103	154
W14×43	69.6	174	261	109	164	4.88	7.28	6.68	20.0	428	83.6	125
W10×54	66.6	166	250	105	158	2.48	3.75	9.04	33.6	303	74.7	112

ASD	LRFD
$\Omega_b = 1.67$	$\phi_b = 0.90$
$\Omega_v = 1.50$	$\phi_v = 1.00$

[1] Shape exceeds compact limit for flexure with F_y = 50 ksi.

Z_x

Table 3-2 (continued)
W-Shapes
Selection by Z_x

$F_y = 50$ ksi

Shape	Z_x	M_{px}/Ω_b	$\phi_b M_{px}$	M_{rx}/Ω_b	$\phi_b M_{rx}$	BF/Ω_b	$\phi_b BF$	L_p	L_r	I_x	V_{nx}/Ω_v	$\phi_v V_{nx}$
		kip-ft	kip-ft	kip-ft	kip-ft	kips	kips				kips	kips
	in.^{3}	ASD	LRFD	ASD	LRFD	ASD	LRFD	ft	ft	in.^{4}	ASD	LRFD
W18×35	**66.5**	**166**	**249**	**101**	**151**	**8.14**	**12.3**	**4.31**	**12.3**	**510**	**106**	**159**
W12×45	64.2	160	241	101	151	3.80	5.80	6.89	22.4	348	81.1	122
W16×36	64.0	160	240	98.7	148	6.24	9.36	5.37	15.2	448	93.8	141
W14×38	61.5	153	231	95.4	143	5.37	8.20	5.47	16.2	385	87.4	131
W10×49	60.4	151	227	95.4	143	2.46	3.71	8.97	31.6	272	68.0	102
W8×58	59.8	149	224	90.8	137	1.70	2.55	7.42	41.6	228	89.3	134
W12×40	57.0	142	214	89.9	135	3.66	5.54	6.85	21.1	307	70.2	105
W10×45	54.9	137	206	85.8	129	2.59	3.89	7.10	26.9	248	70.7	106
W14×34	**54.6**	**136**	**205**	**84.9**	**128**	**5.01**	**7.55**	**5.40**	**15.6**	**340**	**79.8**	**120**
W16×31	**54.0**	**135**	**203**	**82.4**	**124**	**6.86**	**10.3**	**4.13**	**11.8**	**375**	**87.5**	**131**
W12×35	51.2	128	192	79.6	120	4.34	6.45	5.44	16.6	285	75.0	113
W8×48	49.0	122	184	75.4	113	1.67	2.55	7.35	35.2	184	68.0	102
W14×30	**47.3**	**118**	**177**	**73.4**	**110**	**4.63**	**6.95**	**5.26**	**14.9**	**291**	**74.5**	**112**
W10×39	46.8	117	176	73.5	111	2.53	3.78	6.99	24.2	209	62.5	93.7
W16×26[v]	**44.2**	**110**	**166**	**67.1**	**101**	**5.93**	**8.98**	**3.96**	**11.2**	**301**	**70.5**	**106**
W12×30	43.1	108	162	67.4	101	3.97	5.96	5.37	15.6	238	64.0	95.9
W14×26	**40.2**	**100**	**151**	**61.7**	**92.7**	**5.33**	**8.11**	**3.81**	**11.0**	**245**	**70.9**	**106**
W8×40	39.8	99.3	149	62.0	93.2	1.64	2.46	7.21	29.9	146	59.4	89.1
W10×33	38.8	96.8	146	61.1	91.9	2.39	3.62	6.85	21.8	171	56.4	84.7
W12×26	**37.2**	**92.8**	**140**	**58.3**	**87.7**	**3.61**	**5.46**	**5.33**	**14.9**	**204**	**56.1**	**84.2**
W10×30	36.6	91.3	137	56.6	85.1	3.08	4.61	4.84	16.1	170	63.0	94.5
W8×35	34.7	86.6	130	54.5	81.9	1.62	2.43	7.17	27.0	127	50.3	75.5
W14×22	**33.2**	**82.8**	**125**	**50.6**	**76.1**	**4.78**	**7.27**	**3.67**	**10.4**	**199**	**63.0**	**94.5**
W10×26	31.3	78.1	117	48.7	73.2	2.91	4.34	4.80	14.9	144	53.6	80.3
W8×31[f]	30.4	75.8	114	48.0	72.2	1.58	2.37	7.18	24.8	110	45.6	68.4
W12×22	**29.3**	**73.1**	**110**	**44.4**	**66.7**	**4.68**	**7.06**	**3.00**	**9.13**	**156**	**64.0**	**95.9**
W8×28	27.2	67.9	102	42.4	63.8	1.67	2.50	5.72	21.0	98.0	45.9	68.9
W10×22	**26.0**	**64.9**	**97.5**	**40.5**	**60.9**	**2.68**	**4.02**	**4.70**	**13.8**	**118**	**49.0**	**73.4**
W12×19	**24.7**	**61.6**	**92.6**	**37.2**	**55.9**	**4.27**	**6.43**	**2.90**	**8.61**	**130**	**57.3**	**86.0**
W8×24	23.1	57.6	86.6	36.5	54.9	1.60	2.40	5.69	18.9	82.7	38.9	58.3
W10×19	**21.6**	**53.9**	**81.0**	**32.8**	**49.4**	**3.18**	**4.76**	**3.09**	**9.73**	**96.3**	**51.0**	**76.5**
W8×21	20.4	50.9	76.5	31.8	47.8	1.85	2.77	4.45	14.8	75.3	41.4	62.1

ASD	LRFD
$\Omega_b = 1.67$	$\phi_b = 0.90$
$\Omega_v = 1.50$	$\phi_v = 1.00$

[f] Shape exceeds compact limit for flexure with $F_y = 50$ ksi.
[v] Shape does not meet the h/t_w limit for shear in AISC *Specification* Section G2.1(a) with $F_y = 50$ ksi; therefore, $\phi_v = 0.90$ and $\Omega_v = 1.67$.

Table 3-2 (continued)

W-Shapes

Selection by Z_x

F_y = 50 ksi

Z_x

Shape	Z_x	M_{px}/Ω_b	$\phi_b M_{px}$	M_{rx}/Ω_b	$\phi_b M_{rx}$	BF/Ω_b	$\phi_b BF$	L_p	L_r	I_x	V_{nx}/Ω_v	$\phi_v V_{nx}$
		kip-ft	kip-ft	kip-ft	kip-ft	kips	kips				kips	kips
	in.^{3}	ASD	LRFD	ASD	LRFD	ASD	LRFD	ft	ft	in.^{4}	ASD	LRFD
W12×16	**20.1**	**50.1**	**75.4**	**29.9**	**44.9**	**3.80**	**5.73**	**2.73**	**8.05**	**103**	**52.8**	**79.2**
W10×17	18.7	46.7	70.1	28.3	42.5	2.98	4.47	2.98	9.16	81.9	48.5	72.7
W12×14[v]	**17.4**	**43.4**	**65.3**	**26.0**	**39.1**	**3.43**	**5.17**	**2.66**	**7.73**	**88.6**	**42.8**	**64.3**
W8×18	17.0	42.4	63.8	26.5	39.9	1.74	2.61	4.34	13.5	61.9	37.4	56.2
W10×15	16.0	39.9	60.0	24.1	36.2	2.75	4.14	2.86	8.61	68.9	46.0	68.9
W8×15	13.6	33.9	51.0	20.6	31.0	1.90	2.85	3.09	10.1	48.0	39.7	59.6
W10×12[f]	**12.6**	**31.2**	**46.9**	**19.0**	**28.6**	**2.36**	**3.53**	**2.87**	**8.05**	**53.8**	**37.5**	**56.3**
W8×13	11.4	28.4	42.8	17.3	26.0	1.76	2.67	2.98	9.27	39.6	36.8	55.1
W8×10[f]	**8.87**	**21.9**	**32.9**	**13.6**	**20.5**	**1.54**	**2.30**	**3.14**	**8.52**	**30.8**	**26.8**	**40.2**

ASD	LRFD
$\Omega_b = 1.67$	$\phi_b = 0.90$
$\Omega_v = 1.50$	$\phi_v = 1.00$

[f] Shape exceeds compact limit for flexure with $F_y = 50$ ksi.
[v] Shape does not meet the h/t_w limit for shear in AISC *Specification* Section G2.1(a) with $F_y = 50$ ksi; therefore, $\phi_v = 0.90$ and $\Omega_v = 1.67$.

I_x

Table 3-3
W-Shapes
Selection by I_x

Shape	I_x in.^{4}	Shape	I_x in.^{4}	Shape	I_x in.^{4}	Shape	I_x in.^{4}
W36×652[h]	**50600**	**W44×230**	**20800**	**W40×167**	**11600**	**W33×118**	**5900**
		W30×391[h]	20700	W33×201	11600	W30×132	5770
W40×593[h]	**50400**	W40×278	20500	W36×182	11300	W24×176	5680
		W40×249	19600	W27×258	10800	W27×146	5660
W40×503[h]	**41600**	W36×282	19600	W14×605[h]	10800	W18×258[h]	5510
W36×529[h]	39600	W33×318	19500	W24×306[h]	10700	W14×370[h]	5440
		W40×264	19400	W36×170	10500	W30×124	5360
W36×487[h]	**36000**	W30×357[h]	18700	W30×211	10300	W21×201	5310
		W36×262	17900			W24×162	5170
W40×431[h]	**34800**	W33×291	17700	**W40×149**	**9800**		
W36×441[h]	32100	W40×235	17400	W36×160	9760	**W30×116**	**4930**
		W36×256	16800	W27×235	9700	W18×234[h]	4900
W40×397[h]	**32000**	W30×326[h]	16800	W24×279[h]	9600	W14×342[h]	4900
				W14×550[h]	9430	W27×129	4760
W44×335	**31100**	**W40×215**	**16700**	W33×169	9290	W21×182	4730
W40×392[h]	29900	W36×247	16700	W30×191	9200	W24×146	4580
W40×372[h]	29600	W27×368[h]	16200	W36×150	9040		
W40×362[h]	28900	W33×263	15900	W27×217	8910	**W30×108**	**4470**
W36×395[h]	28500	W36×231	15600	W24×250	8490	W18×211	4330
				W30×173	8230	W14×311[h]	4330
W44×290	**27000**	**W40×211**	**15500**	W14×500[h]	8210	W21×166	4280
W36×361[h]	25700	W36×232	15000	W33×152	8160	W27×114	4080
W40×324	25600			W27×194	7860	W12×336[h]	4060
W27×539[h]	25600	**W40×199**	**14900**			W24×131	4020
W40×331[h]	24700	W30×292	14900	**W36×135**	**7800**		
W40×327[h]	24500	W27×336[h]	14600	W24×229	7650	**W30×99**	**3990**
W33×387[h]	24300	W14×730[h]	14300	W33×141	7450	W18×192	3870
		W33×241	14200	W14×455[h]	7190	W14×283[h]	3840
W44×262	**24100**	W24×370[h]	13400	W27×178	7020	W21×147	3630
W36×330	23300			W18×311[h]	6970	W27×102	3620
W40×297	23200	**W40×183**	**13200**	W24×207	6820		
W33×354[h]	22000	W36×210	13200				
W40×277	21900	W30×261	13100	**W33×130**	**6710**		
W40×294	21900	W27×307[h]	13100	W30×148	6680		
W36×302	21100	W33×221	12900	W14×426[h]	6600		
		W14×665[h]	12400	W27×161	6310		
		W36×194	12100	W24×192	6260		
		W27×281	11900	W18×283[h]	6170		
		W24×335[h]	11900	W14×398[h]	6000		
		W30×235	11700				

[h] Flange thickness greater than 2 in. Special requirements may apply per AISC *Specification* Section A3.1c.

Table 3-3 (continued)
W-Shapes
Selection by I_x

I_x

Shape	I_x in.^{4}	Shape	I_x in.^{4}	Shape	I_x in.^{4}	Shape	I_x in.^{4}
W30×90	**3610**	**W24×68**	**1830**	**W21×44**	**843**	**W16×26**	**301**
W12×305[h]	3550	W21×83	1830	W12×96	833	W14×30	291
W24×117	3540	W18×97	1750	W18×50	800	W12×35	285
W18×175	3450	W14×145	1710	W14×74	795	W10×49	272
W14×257	3400	W12×170	1650	W16×57	758	W8×67	272
W27×94	3270	W21×73	1600	W12×87	740	W10×45	248
W21×132	3220			W14×68	722		
W12×279[h]	3110	**W24×62**	**1550**	W10×112	716	**W14×26**	**245**
W24×104	3100	W18×86	1530	W18×46	712	W12×30	238
W18×158	3060	W14×132	1530	W12×79	662	W8×58	228
W14×233	3010	W16×100	1490	W16×50	659	W10×39	209
W24×103	3000	W21×68	1480	W14×61	640		
W21×122	2960	W12×152	1430	W10×100	623	**W12×26**	**204**
		W14×120	1380				
W27×84	**2850**			**W18×40**	**612**	W14×22	199
W18×143	2750	**W24×55**	**1350**	W12×72	597	W8×48	184
W12×252[h]	2720	W21×62	1330	W16×45	586	W10×33	171
W24×94	2700	W18×76	1330	W14×53	541	W10×30	170
W21×111	2670	W16×89	1300	W10×88	534		
W14×211	2660	W14×109	1240	W12×65	533	**W12×22**	**156**
W18×130	2460	W12×136	1240			W8×40	146
W21×101	2420	W21×57	1170	**W16×40**	**518**	W10×26	144
W12×230[h]	2420	W18×71	1170				
W14×193	2400			**W18×35**	**510**	**W12×19**	**130**
		W21×55	**1140**	W14×48	484	W8×35	127
W24×84	**2370**	W16×77	1110	W12×58	475	W10×22	118
W18×119	2190	W14×99	1110	W10×77	455	W8×31	110
W14×176	2140	W18×65	1070	W16×36	448		
W12×210	2140	W12×120	1070	W14×43	428	**W12×16**	**103**
		W14×90	999	W12×53	425	W8×28	98.0
W24×76	**2100**			W10×68	394	W10×19	96.3
W21×93	2070	**W21×50**	**984**	W12×50	391		
W18×106	1910	W18×60	984	W14×38	385	**W12×14**	**88.6**
W14×159	1900					W8×24	82.7
W12×190	1890	**W21×48**	**959**	**W16×31**	**375**	W10×17	81.9
		W16×67	954	W12×45	348	W8×21	75.3
		W12×106	933	W10×60	341	W10×15	68.9
		W18×55	890	W14×34	340	W8×18	61.9
		W14×82	881	W12×40	307		
				W10×54	303	**W10×12**	**53.8**
						W8×15	48.0
						W8×13	39.6
						W8×10	**30.8**

[h] *Flange thickness greater than 2 in. Special requirements may apply per AISC Specification Section A3.1c.*

Z_y

Table 3-4
W-Shapes
Selection by Z_y

F_y = 50 ksi

Shape	Z_y	M_{ny}/Ω_b	$\phi_b M_{ny}$	Shape	Z_y	M_{ny}/Ω_b	$\phi_b M_{ny}$	Shape	Z_y	M_{ny}/Ω_b	$\phi_b M_{ny}$
		kip-ft	kip-ft			kip-ft	kip-ft			kip-ft	kip-ft
	in.^{3}	ASD	LRFD		in.^{3}	ASD	LRFD		in.^{3}	ASD	LRFD
W14×730[h]	816	2040	3060	W14×283[h]	274	684	1030	W14×211	198	494	743
W14×665[h]	730	1820	2740	W12×336[h]	274	684	1030	W30×261	196	489	735
W14×605[h]	652	1630	2450	W40×362[h]	270	674	1010	W12×252[h]	196	489	735
W14×550[h]	583	1450	2190	W24×370[h]	267	666	1000	W24×279[h]	193	482	724
W36×652[h]	581	1450	2180	W36×330	265	661	994	W36×247	190	474	713
W14×500[h]	522	1300	1960	W30×326[h]	252	629	945	W27×258	187	467	701
W40×593[h]	481	1200	1800	W27×336[h]	252	629	945	W18×283[h]	185	462	694
W14×455[h]	468	1170	1760	W33×318	250	624	938	W44×262	182	454	683
W36×529[h]	454	1130	1700	W14×257	246	614	923	W40×249	182	454	683
W27×539[h]	437	1090	1640	W12×305[h]	244	609	915	W33×241	182	454	683
W14×426[h]	434	1080	1630	W36×302	241	601	904	W14×193	180	449	675
W36×487[h]	412	1030	1550	W40×324	239	596	896	W12×230[h]	177	442	664
W14×398[h]	402	1000	1510	W24×335[h]	238	594	893	W36×231	176	439	660
W40×503[h]	394	983	1480	W44×335	236	589	885	W30×235	175	437	656
W14×370[h]	370	923	1390	W27×307[h]	227	566	851	W40×331[h]	172	423	636
W36×441[h]	368	918	1380	W33×291	226	564	848	W24×250	171	427	641
W14×342[h]	338	843	1270	W36×282	223	556	836	W27×235	168	419	630
W40×431[h]	328	818	1230	W30×292	223	556	836	W18×258[h]	166	414	623
W36×395[h]	325	811	1220	W14×233	221	551	829	W33×221	164	409	615
W33×387[h]	312	778	1170	W12×279[h]	220	549	825	W14×176	163	407	611
W30×391[h]	310	773	1160	W40×297	215	536	806	W12×210	159	397	596
W14×311[h]	304	758	1140	W24×306[h]	214	534	803	W44×230[f]	157	392	589
W40×397[h]	300	749	1130	W40×392[h]	212	519	780	W40×215	156	389	585
W36×361[h]	293	731	1100	W18×311[h]	207	516	776	W30×211	155	387	581
W33×354[h]	282	704	1060	W27×281	206	514	773	W27×217	154	384	578
W30×357[h]	279	696	1050	W44×290	205	511	769	W24×229	154	384	578
W27×368[h]	279	696	1050	W40×277	204	509	765	W40×294	150	373	561
W40×372[h]	277	691	1040	W36×262	204	509	765	W18×234[h]	149	372	559
				W33×263	202	504	758	W33×201	147	367	551

ASD	LRFD
Ω_b = 1.67	ϕ_b = 0.90
Ω_v = 1.50	ϕ_v = 1.00

[f] Shape exceeds compact limit for flexure with F_y = 50 ksi.

[h] Flange thickness greater than 2 in. Special requirements may apply per AISC *Specification* Section A3.1c.

Table 3-4 (continued)
W-Shapes
Selection by Z_y

F_y = 50 ksi

Z_y

Shape	Z_y	M_{ny}/Ω_b	$\phi_b M_{ny}$	Shape	Z_y	M_{ny}/Ω_b	$\phi_b M_{ny}$	Shape	Z_y	M_{ny}/Ω_b	$\phi_b M_{ny}$
		kip-ft	kip-ft			kip-ft	kip-ft			kip-ft	kip-ft
	in.^{3}	ASD	LRFD		in.^{3}	ASD	LRFD		in.^{3}	ASD	LRFD
W14×159	**146**	**364**	**548**	**W14×109**	**92.7**	**231**	**348**	**W12×87**	**60.4**	**151**	**227**
W12×190	143	357	536	W21×147	92.6	231	347	W36×135	59.7	149	224
W40×278	140	348	523	W36×182	90.7	226	340	W33×130	59.5	148	223
W30×191	138	344	518	W40×183	88.3	220	331	W30×132	58.4	146	219
W40×199	137	342	514	W18×143	85.4	213	320	W27×129	57.6	144	216
W36×256	137	342	514	W12×120	85.4	213	320	W18×97	55.3	138	207
W24×207	137	342	514	W33×169	84.4	211	317	W16×100	54.9	137	206
W27×194	136	339	510	W36×170	83.8	209	314	**W12×79**	**54.3**	**135**	**204**
W21×201	133	332	499	**W14×99**[f]	**83.6**	**207**	**311**	W30×124	54.0	135	203
W14×145	**133**	**332**	**499**	W21×132	82.3	205	309	W10×88	53.1	132	199
W40×264	132	329	495	W24×131	81.5	203	306	W33×118	51.3	128	192
W18×211	132	329	495	W36×160	77.3	193	290	W27×114	49.3	123	185
W24×192	126	314	473	W18×130	76.7	191	288	W30×116	49.2	123	185
W12×170	126	314	473	W40×167	76.0	190	285	**W12×72**	**49.2**	**123**	**185**
W30×173	123	307	461	W21×122	75.6	189	283	W18×86	48.4	121	182
W36×232	122	304	458	**W14×90**[f]	**75.6**	**181**	**273**	W16×89	48.1	120	180
W27×178	122	304	458	W12×106	75.1	187	282	W10×77	45.9	115	172
W21×182	119	297	446	W33×152	73.9	184	277	W14×82	44.8	112	168
W18×192	119	297	446	W24×117	71.4	178	268	**W12×65**[f]	**44.1**	**107**	**161**
W40×235	118	294	443	W36×150	70.9	177	266	W30×108	43.9	110	165
W24×176	115	287	431	W10×112	69.2	173	260	W27×102	43.4	108	163
W14×132	**113**	**282**	**424**	W18×119	69.1	172	259	W18×76	42.2	105	158
W12×152	111	277	416	W21×111	68.2	170	256	W24×103	41.5	104	156
W27×161	109	272	409	W30×148	68.0	170	255	W16×77	41.1	103	154
W21×166	108	269	405	W12×96	67.5	168	253	W14×74	40.5	101	152
W36×210	107	267	401	W33×141	66.9	167	251	W10×68	40.1	100	150
W18×175	106	264	398	W24×104	62.4	156	234	W27×94	38.8	96.8	146
W40×211	105	262	394	W40×149	62.2	155	233	W30×99	38.6	96.3	145
W24×162	105	262	394	W21×101	61.7	154	231	W24×94	37.5	93.6	141
W14×120	**102**	**254**	**383**	W10×100	61.0	152	229	W14×68	36.9	92.1	138
W12×136	98.0	245	368	W18×106	60.5	151	227	W16×67	35.5	88.6	133
W36×194	97.7	244	366								
W27×146	97.7	244	366								
W18×158	94.8	237	356								
W24×146	93.2	233	350								

ASD	LRFD
Ω_b = 1.67	ϕ_b = 0.90
Ω_v = 1.50	ϕ_v = 1.00

[f] Shape exceeds compact limit for flexure with F_y = 50 ksi.

Z_y

Table 3-4 (continued)
W-Shapes
Selection by Z_y

F_y = 50 ksi

Shape	Z_y	M_{ny}/Ω_b	$\phi_b M_{ny}$	Shape	Z_y	M_{ny}/Ω_b	$\phi_b M_{ny}$	Shape	Z_y	M_{ny}/Ω_b	$\phi_b M_{ny}$
		kip-ft	kip-ft			kip-ft	kip-ft			kip-ft	kip-ft
	in.^{3}	ASD	LRFD		in.^{3}	ASD	LRFD		in.^{3}	ASD	LRFD
W10×60	**35.0**	**87.3**	**131**	**W8×40**	**18.5**	**46.2**	**69.4**	**W8×24**	**8.57**	**21.4**	**32.1**
W30×90	34.7	86.6	130	W21×55	18.4	45.9	69.0	W12×26	8.17	20.4	30.6
W21×93	34.7	86.6	130	W14×43	17.3	43.2	64.9	W18×35	8.06	20.1	30.2
W27×84	33.2	82.8	125	**W10×39**	**17.2**	**42.9**	**64.5**	W10×26	7.50	18.7	28.1
W14×61	32.8	81.8	123	W12×40	16.8	41.9	63.0	W16×31	7.03	17.5	26.4
W8×67	32.7	81.6	123	W18×50	16.6	41.4	62.3	**W10×22**	**6.10**	**15.2**	**22.9**
W24×84	32.6	81.3	122	W16×50	16.3	40.7	61.1	**W8×21**	**5.69**	**14.2**	**21.3**
W12×58	**32.5**	**81.1**	**122**	**W8×35**	**16.1**	**40.2**	**60.4**	W14×26	5.54	13.8	20.8
W10×54	**31.3**	**78.1**	**117**	W24×62	15.7	39.1	58.8	W16×26	5.48	13.7	20.6
W21×83	30.5	76.1	114	W21×48[1]	14.9	36.7	55.2	**W8×18**	**4.66**	**11.6**	**17.5**
W12×53	**29.1**	**72.6**	**109**	W21×57	14.8	36.9	55.5	W14×22	4.39	11.0	16.5
W24×76	28.6	71.4	107	W16×45	14.5	36.2	54.4	W12×22	3.66	9.13	13.7
W10×49	**28.3**	**70.6**	**106**	**W8×31**[1]	**14.1**	**35.1**	**52.8**	W10×19	3.35	8.36	12.6
W8×58	27.9	69.6	105	W10×33	14.0	34.9	52.5	W12×19	2.98	7.44	11.2
W21×73	26.6	66.4	99.8	W24×55	13.3	33.1	49.8	**W10×17**	**2.80**	**6.99**	**10.5**
W18×71	24.7	61.6	92.6	W16×40	12.7	31.7	47.6	**W8×15**	**2.67**	**6.66**	**10.0**
W24×68	24.5	61.1	91.9	W21×50	12.2	30.4	45.8	**W10×15**	**2.30**	**5.74**	**8.63**
W21×68	24.4	60.9	91.5	W14×38	12.1	30.2	45.4	W12×16	2.26	5.63	8.46
W8×48	**22.9**	**57.1**	**85.9**	W18×46	11.7	29.2	43.9	**W8×13**	**2.15**	**5.36**	**8.06**
W18×65	22.5	56.1	84.4	W12×35	11.5	28.7	43.1	W12×14	1.90	4.74	7.13
W14×53	22.0	54.9	82.5	W16×36	10.8	26.9	40.5	**W10×12**[1]	**1.74**	**4.30**	**6.46**
W21×62	21.7	54.1	81.4	W14×34	10.6	26.4	39.8	**W8×10**[1]	**1.66**	**4.07**	**6.12**
W12×50	21.3	53.1	79.9	W21×44	10.2	25.4	38.2				
W18×60	20.6	51.4	77.3	**W8×28**	**10.1**	**25.2**	**37.9**				
W10×45	**20.3**	**50.6**	**76.1**	W18×40	10.0	25.0	37.5				
W14×48	19.6	48.9	73.5	W12×30	9.56	23.9	35.9				
W12×45	**19.0**	**47.4**	**71.3**	W14×30	8.99	22.4	33.7				
W16×57	18.9	47.2	70.9	W10×30	8.84	22.1	33.2				
W18×55	18.5	46.2	69.4								

ASD	LRFD
$\Omega_b = 1.67$	$\phi_b = 0.90$
$\Omega_v = 1.50$	$\phi_v = 1.00$

[1] Shape exceeds compact limit for flexure with F_y = 50 ksi.

Table 3-5
W-Shapes
Selection by I_y

I_y

Shape	I_y in.^{4}	Shape	I_y in.^{4}	Shape	I_y in.^{4}	Shape	I_y in.^{4}
W14×730[h]	**4720**	**W14×283**[h]	**1440**	**W14×193**	**931**	**W14×132**	**548**
		W40×372[h]	1420	W40×249	926	W21×201	542
W14×665[h]	**4170**	W36×330	1420	W44×262	923	W24×192	530
		W30×357[h]	1390	W24×306[h]	919	W36×256	528
W14×605[h]	**3680**	W40×362[h]	1380	W27×258	859	W40×278	521
		W27×368[h]	1310	W30×235	855	W12×170	517
W14×550[h]	**3250**	W36×302	1300	W33×221	840	W27×161	497
W36×652[h]	3230	W33×318	1290				
				W14×176	**838**	**W14×120**	**495**
W14×500[h]	**2880**	**W14×257**	**1290**	W12×252[h]	828	W40×264	493
		W30×326[h]	1240	W24×279[h]	823	W18×211	493
W14×455[h]	**2560**	W40×324	1220	W40×392[h]	803	W21×182	483
W40×593[h]	2520	W44×335	1200	W44×230	796	W24×176	479
		W36×282	1200	W40×215	803	W36×232	468
W36×529[h]	**2490**	W12×336[h]	1190	W18×311[h]	795	W12×152	464
		W27×336[h]	1180	W27×235	769		
W14×426[h]	**2360**	W33×291	1160	W30×211	757	**W14×109**	**447**
W36×487[h]	2250	W24×370[h]	1160	W33×201	749	W40×235	444
						W27×146	443
W14×398[h]	**2170**	**W14×233**	**1150**	**W14×159**	**748**	W24×162	443
W27×539[h]	2110	W30×292	1100	W12×230[h]	742	W18×192	440
W40×503[h]	2040	W40×297	1090	W24×250	724	W21×166	435
W36×441[h]	1990	W36×262	1090	W27×217	704	W36×210	411
		W27×307[h]	1050	W18×283[h]	704		
W14×370[h]	**1990**	W12×305[h]	1050	W40×199	695	**W14×99**	**402**
		W44×290	1040			W12×136	398
W14×342[h]	**1810**	W40×277	1040	**W14×145**	**677**	W24×146	391
W36×395[h]	1750	W33×263	1040	W30×191	673	W18×175	391
W40×431[h]	1690	W24×335[h]	1030	W12×210	664	W40×211	390
W33×387[h]	1620			W24×229	651	W21×147	376
		W14×211	**1030**	W40×331[h]	644	W36×194	375
W14×311[h]	**1610**	W36×247	1010	W40×327[h]	640		
W36×361[h]	1570	W30×261	959	W18×258[h]	628		
W30×391[h]	1550	W27×281	953	W27×194	619		
W40×397[h]	1540	W36×231	940	W30×173	598		
W33×354[h]	1460	W12×279[h]	937	W12×190	589		
		W33×241	933	W24×207	578		
				W40×294	562		
				W18×234[h]	558		
				W27×178	555		

[h] Flange thickness greater than 2 in. Special requirements may apply per AISC *Specification* Section A3.1c.

I_y

Table 3-5 (continued)
W-Shapes
Selection by I_y

Shape	I_y in.^{4}	Shape	I_y in.^{4}	Shape	I_y in.^{4}	Shape	I_y in.^{4}
W14×90	**362**	**W12×65**	**174**	**W8×48**	**60.9**	**W8×28**	**21.7**
W36×182	347	W30×116	164	W18×71	60.3	W21×44	20.7
W18×158	347	W16×89	163	W14×53	57.7	W12×30	20.3
W12×120	345	W27×114	159	W21×62	57.5	W14×30	19.6
W24×131	340	W10×77	154	W12×50	56.3	W18×40	19.1
W21×132	333	W18×76	152	W18×65	54.8		
W40×183	331	W14×82	148			**W8×24**	**18.3**
W36×170	320	W30×108	146	**W10×45**	**53.4**	W12×26	17.3
W18×143	311	W27×102	139	W14×48	51.4	W10×30	16.7
W33×169	310	W16×77	138	W18×60	50.1	W18×35	15.3
W21×122	305	W14×74	134			W10×26	14.1
W12×106	301	W10×68	134	**W12×45**	**50.0**	W16×31	12.4
W24×117	297	W30×99	128				
W36×160	295	W27×94	124	**W8×40**	**49.1**	**W10×22**	**11.4**
W40×167	283	W14×68	121	W21×55	48.4		
W18×130	276	W24×103	119	W14×43	45.2	**W8×21**	**9.77**
W21×111	274	W16×67	119			W16×26	9.59
W33×152	273			**W10×39**	**45.0**	W14×26	8.91
W36×150	270	**W10×60**	**116**	W18×55	44.9		
W12×96	270	W30×90	115	W12×40	44.1	**W8×18**	**7.97**
W24×104	259	W24×94	109	W16×57	43.1	W14×22	7.00
W18×119	253	W14×61	107			W12×22	4.66
W21×101	248			**W8×35**	**42.6**	W10×19	4.29
W33×141	246	**W12×58**	**107**	W18×50	40.1	W12×19	3.76
		W27×84	106	W21×48	38.7		
W12×87	**241**			W16×50	37.2	**W10×17**	**3.56**
W10×112	236	**W10×54**	**103**				
W40×149	229			**W8×31**	**37.1**	**W8×15**	**3.41**
W30×148	227	**W12×53**	**95.8**	W10×33	36.6		
W36×135	225	W24×84	94.4	W24×62	34.5	**W10×15**	**2.89**
W18×106	220			W16×45	32.8	W12×16	2.82
W33×130	218	**W10×49**	**93.4**	W21×57	30.6		
		W21×93	92.9	W24×55	29.1	**W8×13**	**2.73**
W12×79	**216**	W8×67	88.6	W16×40	28.9	W12×14	2.36
W10×100	207	W24×76	82.5	W14×38	26.7		
W18×97	201	W21×83	81.4	W21×50	24.9	**W10×12**	**2.18**
W30×132	196	W8×58	75.1	W16×36	24.5		
		W21×73	70.6	W12×35	24.5	**W8×10**	**2.09**
W12×72	**195**	W24×68	70.4	W14×34	23.3		
W33×118	187	W21×68	64.7	W18×46	22.5		
W16×100	186						
W27×129	184						
W30×124	181						
W10×88	179						
W18×86	175						

[b] Flange thickness greater than 2 in. Special requirements may apply per AISC *Specification* Section A3.1c.

F_y = 50 ksi

Table 3-6
Maximum Total Uniform Load, kips
W-Shapes

Shape		W44×							
		335		290		262		230[a]	
Design		ASD	LRFD	ASD	LRFD	ASD	LRFD	ASD	LRFD
Span, ft	17	1810	2720						
	18	1800	2700	1510	2260	1360	2040		
	19	1700	2560	1480	2230	1330	2010		
	20	1620	2430	1410	2120	1270	1910	1090	1640
	21	1540	2310	1340	2010	1210	1810	1050	1570
	22	1470	2210	1280	1920	1150	1730	998	1500
	23	1410	2110	1220	1840	1100	1660	955	1430
	24	1350	2030	1170	1760	1060	1590	915	1380
	25	1290	1940	1130	1690	1010	1520	878	1320
	26	1240	1870	1080	1630	975	1470	844	1270
	27	1200	1800	1040	1570	939	1410	813	1220
	28	1150	1740	1010	1510	905	1360	784	1180
	29	1120	1680	970	1460	874	1310	757	1140
	30	1080	1620	938	1410	845	1270	732	1100
	32	1010	1520	879	1320	792	1190	686	1030
	34	951	1430	828	1240	746	1120	646	971
	36	898	1350	782	1180	704	1060	610	917
	38	851	1280	741	1110	667	1000	578	868
	40	808	1220	704	1060	634	953	549	825
	42	770	1160	670	1010	604	907	523	786
	44	735	1100	640	961	576	866	499	750
	46	703	1060	612	920	551	828	477	717
	48	674	1010	586	881	528	794	457	688
	50	647	972	563	846	507	762	439	660
	52	622	935	541	813	487	733	422	635
	54	599	900	521	783	469	706	407	611
	56	577	868	503	755	453	680	392	589
	58	558	838	485	729	437	657	379	569
	60	539	810	469	705	422	635	366	550
	62	522	784	454	682	409	615	354	532
	64	505	759	440	661	396	595	343	516
	66	490	736	426	641	384	577	333	500
	68	476	715	414	622	373	560	323	485
	70	462	694	402	604	362	544	314	471
	72	449	675	391	588	352	529	305	458
Beam Properties									
W_c/Ω_b	$\phi_b W_c$, kip-ft	32300	48600	28100	42300	25300	38100	22000	33000
M_p/Ω_b	$\phi_b M_p$, kip-ft	4040	6080	3520	5290	3170	4760	2740	4130
M_r/Ω_b	$\phi_b M_r$, kip-ft	2460	3700	2170	3260	1940	2910	1700	2550
BF/Ω_b	$\phi_b BF$, kips	59.4	89.5	54.9	82.5	52.6	79.1	46.8	71.2
V_n/Ω_v	$\phi_v V_n$, kips	906	1360	754	1130	680	1020	547	822
Z_x, in.^{3}		1620		1410		1270		1100	
L_p, ft		12.3		12.3		12.3		12.1	
L_r, ft		38.9		36.9		35.7		34.3	

ASD	LRFD
Ω_b = 1.67	ϕ_b = 0.90
Ω_v = 1.50	ϕ_v = 1.00

[a] Shape does not meet the h/t_w limit for shear in AISC *Specification* Section G2.1(a) with F_y = 50 ksi; therefore, ϕ_v = 0.90 and Ω_v = 1.67.

Note: For beams laterally unsupported, see Table 3-10.

Available strength tabulated above heavy line is limited by available shear strength.

W40

Table 3-6 (continued)
Maximum Total Uniform Load, kips
W-Shapes

F_y = 50 ksi

Shape		W40×											
		593[h]		503[h]		431[h]		397[h]		392[h]		372[h]	
Design		ASD	LRFD	ASD	LRFD	ASD	LRFD	ASD	LRFD	ASD	LRFD	ASD	LRFD
Span, ft	14									2360	3540		
	15									2280	3420		
	16									2130	3210		
	17	3080	4620	2590	3890	2210	3320			2010	3020	1880	2830
	18	3060	4600	2570	3870	2170	3270	2000	3000	1900	2850	1860	2800
	19	2900	4360	2440	3660	2060	3090	1890	2840	1800	2700	1760	2650
	20	2750	4140	2320	3480	1960	2940	1800	2700	1710	2570	1680	2520
	21	2620	3940	2210	3310	1860	2800	1710	2570	1630	2440	1600	2400
	22	2500	3760	2100	3160	1780	2670	1630	2450	1550	2330	1520	2290
	23	2400	3600	2010	3030	1700	2560	1560	2350	1480	2230	1460	2190
	24	2300	3450	1930	2900	1630	2450	1500	2250	1420	2140	1400	2100
	25	2200	3310	1850	2780	1560	2350	1440	2160	1370	2050	1340	2020
	26	2120	3180	1780	2680	1500	2260	1380	2080	1310	1970	1290	1940
	27	2040	3070	1720	2580	1450	2180	1330	2000	1260	1900	1240	1870
	28	1970	2960	1650	2490	1400	2100	1280	1930	1220	1830	1200	1800
	29	1900	2860	1600	2400	1350	2030	1240	1860	1180	1770	1160	1740
	30	1840	2760	1540	2320	1300	1960	1200	1800	1140	1710	1120	1680
	32	1720	2590	1450	2180	1220	1840	1120	1690	1070	1600	1050	1580
	34	1620	2440	1360	2050	1150	1730	1060	1590	1000	1510	986	1480
	36	1530	2300	1290	1930	1090	1630	998	1500	948	1430	931	1400
	38	1450	2180	1220	1830	1030	1550	945	1420	898	1350	882	1330
	40	1380	2070	1160	1740	978	1470	898	1350	853	1280	838	1260
	42	1310	1970	1100	1660	931	1400	855	1290	813	1220	798	1200
	44	1250	1880	1050	1580	889	1340	817	1230	776	1170	762	1150
	46	1200	1800	1010	1510	850	1280	781	1170	742	1120	729	1100
	48	1150	1730	965	1450	815	1230	749	1130	711	1070	699	1050
	50	1100	1660	926	1390	782	1180	719	1080	683	1030	671	1010
	52	1060	1590	891	1340	752	1130	691	1040	656	987	645	969
	54	1020	1530	858	1290	724	1090	665	1000	632	950	621	933
	56	984	1480	827	1240	699	1050	642	964	609	916	599	900
	58	950	1430	798	1200	675	1010	619	931	588	884	578	869
	60	918	1380	772	1160	652	980	599	900	569	855	559	840
	62	889	1340	747	1120	631	948	579	871	551	827	541	813
	64	861	1290	724	1090	611	919	561	844	533	802	524	788
	66	835	1250	702	1050	593	891	544	818	517	777	508	764
	68	810	1220	681	1020	575	865	528	794	502	754	493	741
	70	787	1180	662	994	559	840	513	771	488	733	479	720
	72	765	1150	643	967	543	817	499	750	474	713	466	700
Beam Properties													
W_c/Ω_b	$\phi_b W_c$, kip-ft	55100	82800	46300	69600	39100	58800	35900	54000	34100	51300	33500	50400
M_p/Ω_b	$\phi_b M_p$, kip-ft	6890	10400	5790	8700	4890	7350	4490	6750	4270	6410	4190	6300
M_r/Ω_b	$\phi_b M_r$, kip-ft	4090	6140	3460	5200	2950	4440	2720	4100	2510	3780	2550	3830
BF/Ω_b	$\phi_b BF$, kips	55.4	84.4	55.3	83.1	53.6	80.4	52.4	78.4	60.8	90.8	51.7	77.9
V_n/Ω_v	$\phi_v V_n$, kips	1540	2310	1300	1950	1110	1660	1000	1500	1180	1770	942	1410
Z_x, in.^{3}		2760		2320		1960		1800		1710		1680	
L_p, ft		13.4		13.1		12.9		12.9		9.33		12.7	
L_r, ft		63.9		55.2		49.1		46.7		38.3		44.4	

ASD	LRFD
Ω_b = 1.67	ϕ_b = 0.90
Ω_v = 1.50	ϕ_v = 1.00

[h] Flange thickness greater than 2 in. Special requirements may apply per AISC *Specification* Section A3.1c.

Table 3-6 (continued)

Maximum Total Uniform Load, kips

W-Shapes

F_y = 50 ksi

W40

Shape		W40×											
		362[h]		331[h]		327[h]		324		297		294	
Design		ASD	LRFD	ASD	LRFD	ASD	LRFD	ASD	LRFD	ASD	LRFD	ASD	LRFD
Span, ft	14			1990	2990	1930	2890					1710	2570
	15			1900	2860	1880	2820					1690	2540
	16			1780	2680	1760	2640					1580	2380
	17			1680	2520	1660	2490			1480	2220	1490	2240
	18	1820	2730	1590	2380	1560	2350	1610	2410	1470	2220	1410	2120
	19	1720	2580	1500	2260	1480	2230	1530	2310	1400	2100	1330	2010
	20	1640	2460	1430	2150	1410	2120	1460	2190	1330	2000	1270	1910
	21	1560	2340	1360	2040	1340	2010	1390	2090	1260	1900	1210	1810
	22	1490	2240	1300	1950	1280	1920	1320	1990	1210	1810	1150	1730
	23	1420	2140	1240	1870	1220	1840	1270	1900	1150	1730	1100	1660
	24	1360	2050	1190	1790	1170	1760	1210	1830	1110	1660	1060	1590
	25	1310	1970	1140	1720	1130	1690	1170	1750	1060	1600	1010	1520
	26	1260	1890	1100	1650	1080	1630	1120	1680	1020	1530	975	1470
	27	1210	1820	1060	1590	1040	1570	1080	1620	983	1480	939	1410
	28	1170	1760	1020	1530	1010	1510	1040	1560	948	1430	905	1360
	29	1130	1700	984	1480	970	1460	1000	1510	915	1380	874	1310
	30	1090	1640	951	1430	938	1410	971	1460	885	1330	845	1270
	32	1020	1540	892	1340	879	1320	911	1370	830	1250	792	1190
	34	963	1450	839	1260	828	1240	857	1290	781	1170	746	1120
	36	909	1370	793	1190	782	1180	809	1220	737	1110	704	1060
	38	861	1290	751	1130	741	1110	767	1150	699	1050	667	1000
	40	818	1230	714	1070	704	1060	729	1100	664	998	634	953
	42	779	1170	680	1020	670	1010	694	1040	632	950	604	907
	44	744	1120	649	975	640	961	662	995	603	907	576	866
	46	712	1070	620	933	612	920	634	952	577	867	551	828
	48	682	1030	595	894	586	881	607	913	553	831	528	794
	50	655	984	571	858	563	846	583	876	531	798	507	762
	52	630	946	549	825	541	813	560	842	511	767	487	733
	54	606	911	529	794	521	783	540	811	492	739	469	706
	56	585	879	510	766	503	755	520	782	474	713	453	680
	58	564	848	492	740	485	729	502	755	458	688	437	657
	60	546	820	476	715	469	705	486	730	442	665	422	635
	62	528	794	460	692	454	682	470	706	428	644	409	615
	64	511	769	446	670	440	661	455	684	415	623	396	595
	66	496	745	432	650	426	641	442	664	402	605	384	577
	68	481	724	420	631	414	622	429	644	390	587	373	560
	70	468	703	408	613	402	604	416	626	379	570	362	544
	72	455	683	396	596	391	588	405	608	369	554	352	529
Beam Properties													
M_p/Ω_b	$\phi_b M_p$, kip-ft	32700	49200	28500	42900	28100	42300	29100	43800	26500	39900	25300	38100
M_p/Ω_b	$\phi_b M_p$, kip-ft	4090	6150	3570	5360	3520	5290	3640	5480	3320	4990	3170	4760
M_r/Ω_b	$\phi_b M_r$, kip-ft	2480	3730	2110	3180	2100	3150	2240	3360	2040	3070	1890	2840
BF/Ω_b	$\phi_b BF$, kips	51.4	77.3	59.1	88.2	58.0	87.4	49.0	74.1	47.8	71.6	56.9	85.4
V_n/Ω_v	$\phi_v V_n$, kips	909	1360	996	1490	963	1440	804	1210	740	1110	856	1280
Z_x, in.^{3}		1640		1430		1410		1460		1330		1270	
L_p, ft		12.7		9.08		9.11		12.6		12.5		9.01	
L_r, ft		44.0		33.8		33.6		41.2		39.3		31.5	

ASD	LRFD
Ω_b = 1.67	ϕ_b = 0.90
Ω_v = 1.50	ϕ_v = 1.00

Note: For beams laterally unsupported, see Table 3-10.
Available strength tabulated above heavy line is limited by available shear strength.

W40

Table 3-6 (continued)
Maximum Total Uniform Load, kips
W-Shapes

F_y = 50 ksi

Shape		W40×											
		278		277		264		249		235		215	
Design		ASD	LRFD	ASD	LRFD	ASD	LRFD	ASD	LRFD	ASD	LRFD	ASD	LRFD
Span, ft	14	1660	2480			1540	2300						
	15	1580	2380			1500	2260			1320	1980		
	16	1480	2230			1410	2120			1260	1890		
	17	1400	2100			1330	1990			1190	1780		
	18	1320	1980	1320	1980	1250	1880			1120	1680		
	19	1250	1880	1310	1970	1190	1780	1180	1770	1060	1590	1010	1520
	20	1190	1790	1250	1880	1130	1700	1120	1680	1010	1520	962	1450
	21	1130	1700	1190	1790	1070	1610	1060	1600	960	1440	916	1380
	22	1080	1620	1130	1700	1030	1540	1020	1530	916	1380	875	1310
	23	1030	1550	1080	1630	981	1470	972	1460	877	1320	837	1260
	24	990	1490	1040	1560	940	1410	931	1400	840	1260	802	1210
	25	950	1430	998	1500	902	1360	894	1340	806	1210	770	1160
	26	914	1370	960	1440	867	1300	860	1290	775	1170	740	1110
	27	880	1320	924	1390	835	1260	828	1240	747	1120	713	1070
	28	848	1280	891	1340	806	1210	798	1200	720	1080	687	1030
	29	819	1230	860	1290	778	1170	771	1160	695	1040	664	997
	30	792	1190	832	1250	752	1130	745	1120	672	1010	641	964
	32	742	1120	780	1170	705	1060	699	1050	630	947	601	904
	34	699	1050	734	1100	663	997	658	988	593	891	566	851
	36	660	992	693	1040	627	942	621	933	560	842	534	803
	38	625	939	657	987	594	892	588	884	531	797	506	761
	40	594	893	624	938	564	848	559	840	504	758	481	723
	42	566	850	594	893	537	807	532	800	480	721	458	689
	44	540	811	567	852	513	770	508	764	458	689	437	657
	46	516	776	542	815	490	737	486	730	438	659	418	629
	48	495	744	520	781	470	706	466	700	420	631	401	603
	50	475	714	499	750	451	678	447	672	403	606	385	578
	52	457	687	480	721	434	652	430	646	388	583	370	556
	54	440	661	462	694	418	628	414	622	373	561	356	536
	56	424	638	446	670	403	605	399	600	360	541	344	516
	58	410	616	430	647	389	584	385	579	348	522	332	499
	60	396	595	416	625	376	565	373	560	336	505	321	482
	62	383	576	402	605	364	547	361	542	325	489	310	466
	64	371	558	390	586	352	530	349	525	315	473	301	452
	66	360	541	378	568	342	514	339	509	305	459	292	438
	68	349	525	367	551	332	499	329	494	296	446	283	425
	70	339	510	356	536	322	484	319	480	288	433	275	413
	72	330	496	347	521	313	471	310	467	280	421	267	402
Beam Properties													
W_c/Ω_b	$\phi_b W_c$, kip-ft	23800	35700	25000	37500	22600	33900	22400	33600	20200	30300	19200	28900
M_p/Ω_b	$\phi_b M_p$, kip-ft	2970	4460	3120	4690	2820	4240	2790	4200	2520	3790	2410	3620
M_r/Ω_b	$\phi_b M_r$, kip-ft	1780	2680	1920	2890	1700	2550	1730	2610	1530	2300	1500	2250
BF/Ω_b	$\phi_b BF$, kips	55.3	82.8	45.8	68.7	53.8	81.3	42.9	64.4	51.0	76.7	39.4	59.3
V_n/Ω_v	$\phi_v V_n$, kips	828	1240	659	989	768	1150	591	887	659	989	507	761
Z_x, in.^{3}		1190		1250		1130		1120		1010		964	
L_p, ft		8.90		12.6		8.90		12.5		8.97		12.5	
L_r, ft		30.4		38.8		29.7		37.2		28.4		35.6	

ASD	LRFD
Ω_b = 1.67	ϕ_b = 0.90
Ω_v = 1.50	ϕ_v = 1.00

[v] Shape does not meet the h/t_w limit for shear in AISC *Specification* Section G2.1(a) with F_y = 50 ksi; therefore, ϕ_v = 0.90 and Ω_v = 1.67.

F_y = 50 ksi

Table 3-6 (continued)
Maximum Total Uniform Load, kips
W-Shapes

Shape		W40×									
		211		199		183		167		149[v]	
Design		ASD	LRFD	ASD	LRFD	ASD	LRFD	ASD	LRFD	ASD	LRFD
Span, ft	13							1000	1510	865	1300
	14							988	1490	853	1280
	15	1180	1770			1010	1520	922	1390	796	1200
	16	1130	1700			966	1450	865	1300	746	1120
	17	1060	1600	1010	1510	909	1370	814	1220	702	1060
	18	1000	1510	964	1450	858	1290	768	1160	663	997
	19	952	1430	913	1370	813	1220	728	1090	628	944
	20	904	1360	867	1300	772	1160	692	1040	597	897
	21	861	1290	826	1240	736	1110	659	990	568	854
	22	822	1240	788	1190	702	1060	629	945	543	815
	23	786	1180	754	1130	672	1010	601	904	519	780
	24	753	1130	723	1090	644	968	576	866	497	748
	25	723	1090	694	1040	618	929	553	832	477	718
	26	696	1050	667	1000	594	893	532	800	459	690
	27	670	1010	642	966	572	860	512	770	442	664
	28	646	971	619	931	552	829	494	743	426	641
	29	624	937	598	899	533	801	477	717	412	619
	30	603	906	578	869	515	774	461	693	398	598
	32	565	849	542	815	483	726	432	650	373	561
	34	532	799	510	767	454	683	407	611	351	528
	36	502	755	482	724	429	645	384	578	332	498
	38	476	715	456	686	407	611	364	547	314	472
	40	452	680	434	652	386	581	346	520	298	449
	42	431	647	413	621	368	553	329	495	284	427
	44	411	618	394	593	351	528	314	473	271	408
	46	393	591	377	567	336	505	301	452	259	390
	48	377	566	361	543	322	484	288	433	249	374
	50	362	544	347	521	309	464	277	416	239	359
	52	348	523	334	501	297	447	266	400	230	345
	54	335	503	321	483	286	430	256	385	221	332
	56	323	485	310	466	276	415	247	371	213	320
	58	312	469	299	449	266	400	238	358	206	309
	60	301	453	289	435	257	387	231	347	199	299
	62	292	438	280	420	249	375	223	335	193	289
	64	283	425	271	407	241	363	216	325	187	280
	66	274	412	263	395	234	352	210	315	181	272
	68	266	400	255	383	227	341	203	306	176	264
	70	258	388	248	372	221	332	198	297	171	256
	72	251	378	241	362	215	323	192	289	166	249
Beam Properties											
W_b/Ω_b	$\phi_b W_b$, kip-ft	18100	27200	17300	26100	15400	23200	13800	20800	11900	17900
M_p/Ω_b	$\phi_b M_p$, kip-ft	2260	3400	2170	3260	1930	2900	1730	2600	1490	2240
M_r/Ω_b	$\phi_b M_r$, kip-ft	1370	2060	1340	2020	1180	1770	1050	1580	896	1350
BF/Ω_b	$\phi_b BF$, kips	48.6	73.1	37.6	56.1	44.1	66.5	41.7	62.5	38.3	57.4
V_n/Ω_v	$\phi_v V_n$, kips	591	887	503	755	507	761	502	753	432	650
Z_x, in.^{3}		906		869		774		693		598	
L_p, ft		8.87		12.2		8.80		8.48		8.09	
L_r, ft		27.2		34.3		25.8		24.8		23.6	

ASD	LRFD
Ω_b = 1.67	ϕ_b = 0.90
Ω_v = 1.50	ϕ_v = 1.00

[v] Shape does not meet the h/t_w limit for shear in AISC *Specification* Section G2.1(a) with F_y = 50 ksi; therefore, ϕ_v = 0.90 and Ω_v = 1.67.

Note: For beams laterally unsupported, see Table 3-10.

Available strength tabulated above heavy line is limited by available shear strength.

W36

Table 3-6 (continued)
Maximum Total Uniform Load, kips
W-Shapes

F_y = 50 ksi

Shape		W36×											
		652[b]		529[b]		487[b]		441[b]		395[b]		361[b]	
Design		ASD	LRFD	ASD	LRFD	ASD	LRFD	ASD	LRFD	ASD	LRFD	ASD	LRFD
Span, ft	17	3240	4860										
	18	3230	4850	2560	3840	2360	3540	2110	3170	1870	2810	1700	2550
	19	3060	4590	2450	3680	2240	3360	2010	3020	1800	2700	1630	2450
	20	2900	4370	2330	3500	2130	3200	1910	2870	1710	2570	1550	2330
	21	2770	4160	2210	3330	2020	3040	1820	2730	1630	2440	1470	2210
	22	2640	3970	2110	3180	1930	2900	1730	2600	1550	2330	1410	2110
	23	2530	3800	2020	3040	1850	2780	1660	2490	1480	2230	1350	2020
	24	2420	3640	1940	2910	1770	2660	1590	2390	1420	2140	1290	1940
	25	2320	3490	1860	2800	1700	2560	1520	2290	1370	2050	1240	1860
	26	2230	3360	1790	2690	1640	2460	1470	2200	1310	1970	1190	1790
	27	2150	3230	1720	2590	1570	2370	1410	2120	1260	1900	1150	1720
	28	2070	3120	1660	2500	1520	2280	1360	2050	1220	1830	1100	1660
	29	2000	3010	1600	2410	1470	2200	1310	1980	1180	1770	1070	1600
	30	1940	2910	1550	2330	1420	2130	1270	1910	1140	1710	1030	1550
	32	1820	2730	1450	2180	1330	2000	1190	1790	1070	1600	967	1450
	34	1710	2570	1370	2060	1250	1880	1120	1690	1000	1510	910	1370
	36	1610	2430	1290	1940	1180	1780	1060	1590	948	1430	859	1290
	38	1530	2300	1220	1840	1120	1680	1000	1510	898	1350	814	1220
	40	1450	2180	1160	1750	1060	1600	953	1430	853	1280	773	1160
	42	1380	2080	1110	1660	1010	1520	908	1360	813	1220	737	1110
	44	1320	1980	1060	1590	966	1450	866	1300	776	1170	703	1060
	46	1260	1900	1010	1520	924	1390	829	1250	742	1120	673	1010
	48	1210	1820	969	1460	886	1330	794	1190	711	1070	645	969
	50	1160	1750	930	1400	850	1280	762	1150	683	1030	619	930
	52	1120	1680	894	1340	818	1230	733	1100	656	987	595	894
	54	1080	1620	861	1290	787	1180	706	1060	632	950	573	861
	56	1040	1560	830	1250	759	1140	681	1020	609	916	552	830
	58	1000	1510	802	1210	733	1100	657	988	588	884	533	802
	60	968	1460	775	1170	709	1070	635	955	569	855	516	775
	62	937	1410	750	1130	686	1030	615	924	551	827	499	750
	64	908	1360	727	1090	664	998	596	895	533	802	483	727
	66	880	1320	705	1060	644	968	578	868	517	777	469	705
	68	854	1280	684	1030	625	940	561	843	502	754	455	684
	70	830	1250	664	999	607	913	545	819	488	733	442	664
	72	807	1210	646	971	590	888	529	796	474	713	430	646
Beam Properties													
W_c/Ω_b	$\phi_b W_c$, kip-ft	58100	87300	46500	69900	42500	63900	36100	57300	34100	51300	30900	46500
M_p/Ω_b	$\phi_b M_p$, kip-ft	7260	10900	5810	8740	5310	7990	4770	7160	4270	6410	3870	5810
M_r/Ω_b	$\phi_b M_r$, kip-ft	4390	6460	3480	5220	3200	4800	2880	4330	2600	3910	2360	3540
BF/Ω_b	$\phi_b BF$, kips	46.8	70.3	46.4	70.1	46.0	69.5	45.3	67.9	44.9	67.2	43.6	65.6
V_n/Ω_v	$\phi_v V_n$, kips	1620	2430	1280	1920	1180	1770	1060	1590	937	1410	851	1280
Z_x, in.^{3}		2910		2330		2130		1910		1710		1550	
L_p, ft		14.5		14.1		14.0		13.8		13.7		13.6	
L_r, ft		77.7		64.3		59.9		55.5		50.9		48.2	

ASD	LRFD
Ω_b = 1.67	ϕ_b = 0.90
Ω_v = 1.50	ϕ_v = 1.00

[b] Flange thickness greater than 2 in. Special requirements may apply per AISC *Specification* Section A3.1c.

$F_y = 50$ ksi

Table 3-6 (continued)
Maximum Total Uniform Load, kips
W-Shapes

W36

Shape		W36×											
		330		302		282		262		247		231	
Design		ASD	LRFD	ASD	LRFD	ASD	LRFD	ASD	LRFD	ASD	LRFD	ASD	LRFD
Span, ft	17							1240	1860	1170	1760	1110	1660
	18	1540	2310	1410	2120	1310	1970	1220	1830	1140	1720	1070	1610
	19	1480	2230	1340	2020	1250	1880	1160	1740	1080	1630	1010	1520
	20	1410	2120	1280	1920	1190	1790	1100	1650	1030	1550	961	1440
	21	1340	2010	1220	1830	1130	1700	1050	1570	979	1470	915	1380
	22	1280	1920	1160	1750	1080	1620	998	1500	934	1400	874	1310
	23	1220	1840	1110	1670	1030	1550	955	1430	894	1340	836	1260
	24	1170	1760	1060	1600	990	1490	915	1380	857	1290	801	1200
	25	1130	1690	1020	1540	950	1430	878	1320	822	1240	769	1160
	26	1080	1630	983	1480	914	1370	844	1270	791	1190	739	1110
	27	1040	1570	946	1420	880	1320	813	1220	761	1140	712	1070
	28	1010	1510	912	1370	848	1280	784	1180	734	1100	686	1030
	29	970	1460	881	1320	819	1230	757	1140	709	1070	663	996
	30	938	1410	852	1280	792	1190	732	1100	685	1030	641	963
	32	879	1320	798	1200	742	1120	686	1030	642	966	601	903
	34	828	1240	751	1130	699	1050	646	971	605	909	565	850
	36	782	1180	710	1070	660	992	610	917	571	858	534	803
	38	741	1110	672	1010	625	939	578	868	541	813	506	760
	40	704	1060	639	960	594	893	549	825	514	773	481	722
	42	670	1010	608	914	566	850	523	786	489	736	458	688
	44	640	961	581	873	540	811	499	750	467	702	437	657
	46	612	920	555	835	516	776	477	717	447	672	418	628
	48	586	881	532	800	495	744	457	688	428	644	400	602
	50	563	846	511	768	475	714	439	660	411	618	384	578
	52	541	813	491	738	457	687	422	635	395	594	370	556
	54	521	783	473	711	440	661	407	611	381	572	356	535
	56	503	755	456	686	424	638	392	589	367	552	343	516
	58	485	729	440	662	410	616	379	569	354	533	331	498
	60	469	705	426	640	396	595	366	550	343	515	320	482
	62	454	682	412	619	383	576	354	532	332	498	310	466
	64	440	661	399	600	371	558	343	516	321	483	300	451
	66	426	641	387	582	360	541	333	500	311	468	291	438
	68	414	622	376	565	349	525	323	485	302	454	283	425
	70	402	604	365	549	339	510	314	471	294	441	275	413
	72	391	588	355	533	330	496	305	458	286	429	267	401
Beam Properties													
M_n/Ω_b	$\phi_b M_n$, kip-ft	28100	42300	25500	38400	23800	35700	22000	33000	20600	30900	19200	28900
M_p/Ω_b	$\phi_b M_p$, kip-ft	3520	5290	3190	4800	2970	4460	2740	4130	2570	3860	2400	3610
M_r/Ω_b	$\phi_b M_r$, kip-ft	2170	3260	1970	2970	1830	2760	1700	2550	1590	2400	1490	2240
BF/Ω_b	$\phi_b BF$, kips	42.2	63.4	40.5	60.9	39.6	59.0	38.1	57.9	37.4	55.7	35.7	53.7
V_n/Ω_v	$\phi_v V_n$, kips	769	1150	705	1060	657	985	620	930	587	881	555	832
Z_x, in.^{3}		1410		1280		1190		1100		1030		963	
L_p, ft		13.5		13.5		13.4		13.3		13.2		13.1	
L_r, ft		45.5		43.6		42.2		40.6		39.4		38.6	

ASD	LRFD
$\Omega_b = 1.67$	$\phi_b = 0.90$
$\Omega_v = 1.50$	$\phi_v = 1.00$

Note: For beams laterally unsupported, see Table 3-10.
Available strength tabulated above heavy line is limited by available shear strength.

W36

Table 3-6 (continued)
Maximum Total Uniform Load, kips
W-Shapes

F_y = 50 ksi

Shape		W36×											
		256		232		210		194		182		170	
Design		ASD	LRFD	ASD	LRFD	ASD	LRFD	ASD	LRFD	ASD	LRFD	ASD	LRFD
Span, ft	13					1220	1830	1120	1680	1050	1580	985	1480
	14	1440	2150	1290	1940	1190	1790	1090	1640	1020	1540	952	1430
	15	1380	2080	1250	1870	1110	1670	1020	1530	955	1440	889	1340
	16	1300	1950	1170	1760	1040	1560	957	1440	896	1350	833	1250
	17	1220	1840	1100	1650	978	1470	901	1350	843	1270	784	1180
	18	1150	1730	1040	1560	924	1390	851	1280	796	1200	741	1110
	19	1090	1640	983	1480	875	1320	806	1210	754	1130	702	1050
	20	1040	1560	934	1400	831	1250	765	1150	717	1080	667	1000
	21	988	1490	890	1340	792	1190	729	1100	682	1030	635	954
	22	944	1420	849	1280	756	1140	696	1050	651	979	606	911
	23	903	1360	812	1220	723	1090	666	1000	623	937	580	871
	24	865	1300	778	1170	693	1040	638	959	597	898	556	835
	25	830	1250	747	1120	665	1000	612	920	573	862	533	802
	26	798	1200	719	1080	639	961	589	885	551	828	513	771
	27	769	1160	692	1040	616	926	567	852	531	798	494	742
	28	741	1110	667	1000	594	893	547	822	512	769	476	716
	29	716	1080	644	968	573	862	528	793	494	743	460	691
	30	692	1040	623	936	554	833	510	767	478	718	444	668
	32	649	975	584	878	520	781	478	719	448	673	417	626
	34	611	918	549	826	489	735	450	677	422	634	392	589
	36	577	867	519	780	462	694	425	639	398	598	370	557
	38	546	821	492	739	438	658	403	606	377	567	351	527
	40	519	780	467	702	416	625	383	575	358	539	333	501
	42	494	743	445	669	396	595	365	548	341	513	317	477
	44	472	709	425	638	378	568	348	523	326	490	303	455
	46	451	678	406	610	361	543	333	500	312	468	290	436
	48	432	650	389	585	346	521	319	479	299	449	278	418
	50	415	624	374	562	333	500	306	460	287	431	267	401
	52	399	600	359	540	320	481	294	443	276	414	256	385
	54	384	578	346	520	308	463	284	426	265	399	247	371
	56	371	557	334	501	297	446	273	411	256	385	238	358
	58	358	538	322	484	287	431	264	397	247	371	230	346
	60	346	520	311	468	277	417	255	384	239	359	222	334
	62	335	503	301	453	268	403	247	371	231	347	215	323
	64	324	488	292	439	260	390	239	360	224	337	208	313
	66	315	473	283	425	252	379	232	349	217	326	202	304
	68	305	459	275	413	245	368	225	338	211	317	196	295
	70	297	446	267	401	238	357	219	329	205	308	190	286
	72	288	433	259	390	231	347	213	320	199	299	185	278
Beam Properties													
W_g/Ω_b	$\phi_b W_g$, kip-ft	20800	31200	18700	28100	16600	25000	15300	23000	14300	21500	13300	20000
M_p/Ω_b	$\phi_b M_p$, kip-ft	2590	3900	2340	3510	2080	3120	1910	2880	1790	2690	1670	2510
M_r/Ω_b	$\phi_b M_r$, kip-ft	1560	2350	1410	2120	1260	1890	1160	1740	1090	1640	1010	1530
BF/Ω_b	$\phi_b BF$, kips	46.5	70.0	44.8	67.0	42.3	63.4	40.4	61.4	38.9	58.4	37.8	56.1
V_n/Ω_v	$\phi_v V_n$, kips	718	1080	646	968	609	914	558	838	526	790	492	738
Z_x, in.^{3}		1040		936		833		767		718		668	
L_p, ft		9.36		9.25		9.11		9.04		9.01		8.94	
L_r, ft		31.5		30.0		28.5		27.6		27.0		26.4	

ASD	LRFD
Ω_b = 1.67	ϕ_b = 0.90
Ω_v = 1.50	ϕ_v = 1.00

[b] Flange thickness greater than 2 in. Special requirements may apply per AISC *Specification* Section A3.1c.

[v] Shape does not meet the h/t_w limit for shear in AISC *Specification* Section G2.1(a) with F_y = 50 ksi; therefore, ϕ_v = 0.90 and Ω_v = 1.67.

Table 3-6 (continued)
Maximum Total Uniform Load, kips
W-Shapes

F_y = 50 ksi

W36-W33

Shape		W36×						W33×					
		160		150		135[v]		387[h]		354[h]		318	
Design		ASD	LRFD	ASD	LRFD	ASD	LRFD	ASD	LRFD	ASD	LRFD	ASD	LRFD
Span, ft	12			898	1350								
	13	936	1400	892	1340	767	1150						
	14	890	1340	828	1250	726	1090						
	15	830	1250	773	1160	677	1020						
	16	778	1170	725	1090	635	954						
	17	733	1100	682	1030	598	898	1810	2720	1650	2480	1460	2200
	18	692	1040	644	968	564	848	1730	2600	1570	2370	1410	2120
	19	656	985	610	917	535	804	1640	2460	1490	2240	1330	2010
	20	623	936	580	872	508	764	1560	2340	1420	2130	1270	1910
	21	593	891	552	830	484	727	1480	2230	1350	2030	1210	1810
	22	566	851	527	792	462	694	1420	2130	1290	1940	1150	1730
	23	542	814	504	758	442	664	1350	2030	1230	1850	1100	1660
	24	519	780	483	726	423	636	1300	1950	1180	1780	1060	1590
	25	498	749	464	697	406	611	1250	1870	1130	1700	1010	1520
	26	479	720	446	670	391	587	1200	1800	1090	1640	975	1470
	27	461	693	430	646	376	566	1150	1730	1050	1580	939	1410
	28	445	669	414	623	363	545	1110	1670	1010	1520	905	1360
	29	429	646	400	601	350	527	1070	1610	977	1470	874	1310
	30	415	624	387	581	339	509	1040	1560	945	1420	845	1270
	32	389	585	362	545	317	477	973	1460	886	1330	792	1190
	34	366	551	341	513	299	449	916	1380	834	1250	746	1120
	36	346	520	322	484	282	424	865	1300	787	1180	704	1060
	38	328	493	305	459	267	402	819	1230	746	1120	667	1000
	40	311	468	290	436	254	382	778	1170	709	1070	634	953
	42	297	446	276	415	242	364	741	1110	675	1010	604	907
	44	283	425	264	396	231	347	708	1060	644	968	576	866
	46	271	407	252	379	221	332	677	1020	616	926	551	828
	48	259	390	242	363	212	318	649	975	590	888	528	794
	50	249	374	232	349	203	305	623	936	567	852	507	762
	52	240	360	223	335	195	294	599	900	545	819	487	733
	54	231	347	215	323	188	283	577	867	525	789	469	706
	56	222	334	207	311	181	273	556	836	506	761	453	680
	58	215	323	200	301	175	263	537	807	489	734	437	657
	60	208	312	193	291	169	255	519	780	472	710	422	635
	62	201	302	187	281	164	246	502	755	457	687	409	615
	64	195	293	181	272	159	239	487	731	443	666	396	595
	66	189	284	176	264	154	231	472	709	429	645	384	577
	68	183	275	171	256	149	225	458	688	417	626	373	560
	70	178	267	166	249	145	218	445	669	405	609	362	544
	72	173	260	161	242	141	212	432	650	394	592	352	529
Beam Properties													
W_p/Ω_b	$\phi_b W_p$, kip-ft	12500	18700	11600	17400	10200	15300	31100	46800	28300	42600	25300	38100
M_p/Ω_b	$\phi_b M_p$, kip-ft	1560	2340	1450	2180	1270	1910	3890	5850	3540	5330	3170	4760
M_r/Ω_b	$\phi_b M_r$, kip-ft	947	1420	880	1320	767	1150	2360	3540	2170	3260	1940	2910
BF/Ω_b	$\phi_b BF$, kips	36.1	54.2	34.4	51.9	31.7	47.8	38.3	57.8	37.4	56.6	36.8	55.4
V_n/Ω_v	$\phi_v V_n$, kips	468	702	449	673	384	577	907	1360	826	1240	732	1100
Z_x, in.^{3}		624		581		509		1560		1420		1270	
L_p, ft		8.83		8.72		8.41		13.3		13.2		13.1	
L_r, ft		25.8		25.3		24.3		53.3		49.8		46.5	

ASD	LRFD
Ω_b = 1.67	ϕ_b = 0.90
Ω_v = 1.50	ϕ_v = 1.00

Note: For beams laterally unsupported, see Table 3-10.
Available strength tabulated above heavy line is limited by available shear strength.

W33

Table 3-6 (continued)
Maximum Total Uniform Load, kips
W-Shapes

F_y = 50 ksi

Shape		W33×											
		291		263		241		221		201		169	
Design		ASD	LRFD	ASD	LRFD	ASD	LRFD	ASD	LRFD	ASD	LRFD	ASD	LRFD
Span, ft	13											906	1360
	14											897	1350
	15											837	1260
	16					1140	1700	1050	1580	964	1450	785	1180
	17	1340	2000	1200	1800	1100	1660	1010	1510	908	1360	739	1110
	18	1290	1930	1150	1730	1040	1570	950	1430	857	1290	697	1050
	19	1220	1830	1090	1640	987	1480	900	1350	812	1220	661	993
	20	1160	1740	1040	1560	938	1410	855	1290	771	1160	628	944
	21	1100	1660	988	1490	893	1340	815	1220	735	1100	598	899
	22	1050	1580	944	1420	853	1280	778	1170	701	1050	571	858
	23	1010	1510	903	1360	816	1230	744	1120	671	1010	546	820
	24	965	1450	865	1300	782	1180	713	1070	643	966	523	786
	25	926	1390	830	1250	750	1130	684	1030	617	928	502	755
	26	891	1340	798	1200	722	1080	658	989	593	892	483	726
	27	858	1290	769	1160	695	1040	634	952	571	859	465	699
	28	827	1240	741	1110	670	1010	611	918	551	828	448	674
	29	798	1200	716	1080	647	972	590	887	532	800	433	651
	30	772	1160	692	1040	625	940	570	857	514	773	418	629
	32	724	1090	649	975	586	881	535	803	482	725	392	590
	34	681	1020	611	918	552	829	503	756	454	682	369	555
	36	643	967	577	867	521	783	475	714	429	644	349	524
	38	609	916	546	821	494	742	450	677	406	610	330	497
	40	579	870	519	780	469	705	428	643	386	580	314	472
	42	551	829	494	743	447	671	407	612	367	552	299	449
	44	526	791	472	709	426	641	389	584	351	527	285	429
	46	503	757	451	678	408	613	372	559	336	504	273	410
	48	482	725	432	650	391	588	356	536	321	483	262	393
	50	463	696	415	624	375	564	342	514	309	464	251	377
	52	445	669	399	600	361	542	329	494	297	446	241	363
	54	429	644	384	578	347	522	317	476	286	429	232	349
	56	413	621	371	557	335	504	305	459	276	414	224	337
	58	399	600	358	538	323	486	295	443	266	400	216	325
	60	386	580	346	520	313	470	285	429	257	387	209	315
	62	373	561	335	503	303	455	276	415	249	374	202	304
	64	362	544	324	488	293	441	267	402	241	362	196	295
	66	351	527	315	473	284	427	259	390	234	351	190	286
	68	340	512	305	459	276	415	252	378	227	341	185	278
	70	331	497	297	446	268	403	244	367	220	331	179	270
	72	322	483	288	433	261	392	238	357	214	322	174	262
Beam Properties													
W_c/Ω_b	$\phi_b W_c$, kip-ft	23200	34800	20800	31200	18800	28200	17100	25700	15400	23200	12600	18900
M_p/Ω_b	$\phi_b M_p$, kip-ft	2890	4350	2590	3900	2350	3530	2140	3210	1930	2900	1570	2360
M_r/Ω_b	$\phi_b M_r$, kip-ft	1780	2680	1610	2410	1450	2180	1330	1990	1200	1800	959	1440
BF/Ω_b	$\phi_b BF$, kips	36.0	54.2	34.1	51.9	33.2	50.2	31.8	47.8	30.3	45.6	34.2	51.5
V_n/Ω_v	$\phi_v V_n$, kips	668	1000	600	900	567	852	525	788	482	723	453	679
Z_x, in.^{3}		1160		1040		940		857		773		629	
L_p, ft		13.0		12.9		12.8		12.7		12.6		8.83	
L_r, ft		43.8		41.6		39.7		38.2		36.7		26.7	

ASD	LRFD
Ω_b = 1.67	ϕ_b = 0.90
Ω_v = 1.50	ϕ_v = 1.00

[b] Flange thickness greater than 2 in. Special requirements may apply per AISC *Specification* Section A3.1c.

[v] Shape does not meet the h/t_w limit for shear in AISC *Specification* Section G2.1(a) with F_y = 50 ksi; therefore, ϕ_v = 0.90 and Ω_v = 1.67.

Table 3-6 (continued)
Maximum Total Uniform Load, kips
W-Shapes

F_y = 50 ksi

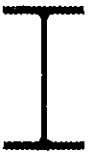

W33-W30

Shape		W33×								W30×			
		152		141		130		118[v]		391[h]		357[h]	
Design		ASD	LRFD	ASD	LRFD	ASD	LRFD	ASD	LRFD	ASD	LRFD	ASD	LRFD
Span, ft	12			806	1210	768	1150	650	977				
	13	851	1280	789	1190	717	1080	637	958				
	14	797	1200	733	1100	666	1000	592	889				
	15	744	1120	684	1030	621	934	552	830				
	16	697	1050	641	964	583	876	518	778	1810	2710	1630	2440
	17	656	986	603	907	548	824	487	732	1700	2560	1550	2330
	18	620	932	570	857	518	778	460	692	1610	2420	1460	2200
	19	587	883	540	812	491	737	436	655	1520	2290	1390	2080
	20	558	839	513	771	466	701	414	623	1450	2180	1320	1980
	21	531	799	489	734	444	667	394	593	1380	2070	1250	1890
	22	507	762	466	701	424	637	377	566	1320	1980	1200	1800
	23	485	729	446	670	405	609	360	541	1260	1890	1150	1720
	24	465	699	427	643	388	584	345	519	1210	1819	1100	1650
	25	446	671	410	617	373	560	331	498	1160	1740	1050	1580
	26	429	645	395	593	359	539	319	479	1110	1670	1010	1520
	27	413	621	380	571	345	519	307	461	1070	1610	976	1470
	28	398	599	366	551	333	500	296	445	1030	1550	941	1410
	29	385	578	354	532	321	483	286	429	998	1500	909	1370
	30	372	559	342	514	311	467	276	415	965	1450	878	1320
	32	349	524	321	482	291	438	259	389	904	1360	823	1240
	34	328	493	302	454	274	412	244	366	851	1280	775	1160
	36	310	466	285	428	259	389	230	346	804	1210	732	1100
	38	294	441	270	406	245	369	218	328	762	1140	693	1040
	40	279	419	256	386	233	350	207	311	724	1090	659	990
	42	266	399	244	367	222	334	197	296	689	1040	627	943
	44	254	381	233	350	212	318	188	283	658	989	599	900
	46	243	365	223	335	203	305	180	271	629	946	573	861
	48	232	349	214	321	194	292	173	259	603	906	549	825
	50	223	335	205	308	186	280	166	249	579	870	527	792
	52	215	323	197	297	179	269	159	239	557	837	507	762
	54	207	311	190	286	173	259	153	231	536	806	488	733
	56	199	299	183	275	166	250	148	222	517	777	470	707
	58	192	289	177	266	161	242	143	215	499	750	454	683
	60	186	280	171	257	155	234	138	208	482	725	439	660
	62	180	270	165	249	150	226	134	201	467	702	425	639
	64	174	262	160	241	146	219	129	195	452	680	412	619
	66	169	254	155	234	141	212	126	189	439	659	399	600
	68	164	247	151	227	137	206	122	183	426	640	387	582
	70	159	240	147	220	133	200	118	178	413	621	376	566
	72	155	233	142	214	129	195	115	173	402	604	366	550
Beam Properties													
W_c/Ω_b	$\phi_b W_c$, kip-ft	11200	16800	10300	15400	9320	14000	8280	12500	28900	43500	26300	39600
M_p/Ω_b	$\phi_b M_p$, kip-ft	1390	2100	1280	1930	1170	1750	1040	1560	3620	5440	3290	4950
M_r/Ω_b	$\phi_b M_r$, kip-ft	851	1280	782	1180	709	1070	627	942	2180	3280	1990	2990
BF/Ω_b	$\phi_b BF$, kips	31.7	48.3	30.3	45.7	29.3	43.1	27.2	40.6	31.4	47.2	31.3	47.2
V_n/Ω_v	$\phi_v V_n$, kips	425	638	403	604	384	576	325	489	903	1350	813	1220
Z_x, in.^{3}		559		514		467		415		1450		1320	
L_p, ft		8.72		8.58		8.44		8.19		13.0		12.9	
L_r, ft		25.7		25.0		24.2		23.4		58.8		54.4	

ASD	LRFD
Ω_b = 1.67	ϕ_b = 0.90
Ω_v = 1.50	ϕ_v = 1.00

Note: For beams laterally unsupported, see Table 3-10.
Available strength tabulated above heavy line is limited by available shear strength.

W30

Table 3-6 (continued)
Maximum Total Uniform Load, kips
W-Shapes

F_y = 50 ksi

Shape		W30×											
		326[h]		292		261		235		211		191	
Design		ASD	LRFD	ASD	LRFD	ASD	LRFD	ASD	LRFD	ASD	LRFD	ASD	LRFD
Span, ft	15									958	1440	872	1310
	16	1480	2220	1310	1960	1180	1760	1040	1560	937	1410	842	1270
	17	1400	2100	1240	1870	1110	1660	994	1490	882	1330	793	1190
	18	1320	1980	1180	1770	1050	1570	939	1410	833	1250	749	1130
	19	1250	1880	1110	1670	991	1490	890	1340	789	1190	709	1070
	20	1190	1790	1060	1590	941	1410	845	1270	750	1130	674	1010
	21	1130	1700	1010	1510	896	1350	805	1210	714	1070	642	964
	22	1080	1620	962	1450	856	1290	768	1160	681	1020	612	920
	23	1030	1550	920	1380	818	1230	735	1100	652	980	586	880
	24	990	1490	882	1330	784	1180	704	1060	625	939	561	844
	25	950	1430	846	1270	753	1130	676	1020	600	901	539	810
	26	914	1370	814	1220	724	1090	650	977	577	867	518	779
	27	880	1320	784	1180	697	1050	626	941	555	834	499	750
	28	848	1280	756	1140	672	1010	604	908	535	805	481	723
	29	819	1230	730	1100	649	976	583	876	517	777	465	698
	30	792	1190	705	1060	627	943	564	847	500	751	449	675
	32	742	1120	661	994	588	884	528	794	468	704	421	633
	34	699	1050	622	935	554	832	497	747	441	663	396	596
	36	660	992	588	883	523	786	470	706	416	626	374	563
	38	625	939	557	837	495	744	445	669	394	593	355	533
	40	594	893	529	795	471	707	423	635	375	563	337	506
	42	566	850	504	757	448	674	403	605	357	536	321	482
	44	540	811	481	723	428	643	384	578	341	512	306	460
	46	516	776	460	691	409	615	368	552	326	490	293	440
	48	495	744	441	663	392	589	352	529	312	469	281	422
	50	475	714	423	636	376	566	338	508	300	451	269	405
	52	457	687	407	612	362	544	325	489	288	433	259	389
	54	440	661	392	589	349	524	313	471	278	417	250	375
	56	424	638	378	568	336	505	302	454	268	402	241	362
	58	410	616	365	548	325	488	291	438	258	388	232	349
	60	396	595	353	530	314	472	282	424	250	376	225	338
	62	383	576	341	513	304	456	273	410	242	363	217	327
	64	371	558	331	497	294	442	264	397	234	352	211	316
	66	360	541	321	482	285	429	256	385	227	341	204	307
	68	349	525	311	468	277	416	249	374	220	331	198	298
	70	339	510	302	454	269	404	242	363	214	322	192	289
	72	330	496	294	442	261	393	235	353	208	313	187	281
Beam Properties													
W_y/Ω_b	$\phi_b W_y$, kip-ft	23800	35700	21200	31800	18800	28300	16900	25400	15000	22500	13500	20300
M_p/Ω_b	$\phi_b M_p$, kip-ft	2970	4460	2640	3980	2350	3540	2110	3180	1870	2820	1680	2530
M_r/Ω_b	$\phi_b M_r$, kip-ft	1820	2730	1620	2440	1450	2180	1310	1960	1160	1750	1050	1580
BF/Ω_b	$\phi_b BF$, kips	30.3	45.6	29.7	44.9	29.1	44.0	28.0	42.7	26.9	40.5	25.6	38.6
V_n/Ω_v	$\phi_v V_n$, kips	739	1110	653	979	588	882	520	779	479	719	436	654
Z_x, in.^{3}		1190		1060		943		847		751		675	
L_p, ft		12.7		12.6		12.5		12.4		12.3		12.2	
L_r, ft		50.6		46.9		43.4		41.0		38.7		36.8	

ASD	LRFD
Ω_b = 1.67	ϕ_b = 0.90
Ω_v = 1.50	ϕ_v = 1.00

[h] Flange thickness greater than 2 in. Special requirements may apply per AISC *Specification* Section A3.1c.

F_y = 50 ksi

Table 3-6 (continued)
Maximum Total Uniform Load, kips
W-Shapes

W30

Shape		W30×											
		173		148		132		124		116		108	
Design		ASD	LRFD	ASD	LRFD	ASD	LRFD	ASD	LRFD	ASD	LRFD	ASD	LRFD
Span, ft	10											650	974
	11					745	1120	707	1060	678	1020	628	944
	12			798	1200	727	1090	679	1020	629	945	576	865
	13			768	1150	671	1010	626	942	580	872	531	798
	14			713	1070	623	936	582	874	539	810	493	741
	15	796	1190	665	1000	582	874	543	816	503	756	460	692
	16	757	1140	624	938	545	819	509	765	472	709	432	649
	17	713	1070	587	882	513	771	479	720	444	667	406	611
	18	673	1010	554	833	485	728	452	680	419	630	384	577
	19	638	958	525	789	459	690	429	644	397	597	363	546
	20	606	911	499	750	436	656	407	612	377	567	345	519
	21	577	867	475	714	415	624	388	583	359	540	329	494
	22	551	828	454	682	396	596	370	556	343	515	314	472
	23	527	792	434	652	379	570	354	532	328	493	300	451
	24	505	759	416	625	363	546	339	510	314	473	288	433
	25	485	728	399	600	349	524	326	490	302	454	276	415
	26	466	700	384	577	335	504	313	471	290	436	266	399
	27	449	674	370	556	323	486	302	453	279	420	256	384
	28	433	650	356	536	312	468	291	437	269	405	247	371
	29	418	628	344	517	301	452	281	422	260	391	238	358
	30	404	607	333	500	291	437	271	408	251	378	230	346
	32	379	569	312	469	273	410	254	383	236	354	216	324
	34	356	536	294	441	257	386	240	360	222	334	203	305
	36	337	506	277	417	242	364	226	340	210	315	192	288
	38	319	479	263	395	230	345	214	322	199	298	182	273
	40	303	455	250	375	218	328	204	306	189	284	173	260
	42	288	434	238	357	208	312	194	291	180	270	164	247
	44	275	414	227	341	198	298	185	278	171	258	157	236
	46	263	396	217	326	190	285	177	266	164	247	150	226
	48	252	379	208	313	182	273	170	255	157	236	144	216
	50	242	364	200	300	174	262	163	245	151	227	138	208
	52	233	350	192	288	168	252	157	235	145	218	133	200
	54	224	337	185	278	162	243	151	227	140	210	128	192
	56	216	325	178	268	156	234	145	219	135	203	123	185
	58	209	314	172	259	150	226	140	211	130	196	119	179
	60	202	304	166	250	145	219	136	204	126	189	115	173
	62	195	294	161	242	141	211	131	197	122	183	111	167
	64	189	285	156	234	136	205	127	191	118	177	108	162
	66	184	276	151	227	132	199	123	185	114	172	105	157
	68	178	268	147	221	128	193	120	180	111	167	102	153
	70	173	260	143	214	125	187	116	175	108	162	98.7	148
	72	168	253	139	208	121	182	113	170	105	158	95.9	144
Beam Properties													
W_c/Ω_b	$\phi_b W_c$, kip-ft	12100	18200	9980	15000	8720	13100	8140	12200	7540	11300	6910	10400
M_p/Ω_b	$\phi_b M_p$, kip-ft	1510	2280	1250	1880	1090	1640	1020	1530	943	1420	863	1300
M_r/Ω_b	$\phi_b M_r$, kip-ft	945	1420	761	1140	664	998	620	932	575	864	522	785
BF/Ω_b	$\phi_b BF$, kips	24.1	36.8	29.0	43.9	26.9	40.5	26.1	39.0	24.8	37.4	23.5	35.5
V_n/Ω_v	$\phi_v V_n$, kips	398	597	399	599	373	559	353	530	339	509	325	487
Z_x, in.^{3}		607		500		437		408		378		346	
L_p, ft		12.1		8.05		7.95		7.88		7.74		7.59	
L_r, ft		35.5		24.9		23.8		23.2		22.6		22.1	

ASD	LRFD
$\Omega_b = 1.67$	$\phi_b = 0.90$
$\Omega_v = 1.50$	$\phi_v = 1.00$

Note: For beams laterally unsupported, see Table 3-10.
Available strength tabulated above heavy line is limited by available shear strength.

W30-W27

Table 3-6 (continued)
Maximum Total Uniform Load, kips
W-Shapes

$F_y = 50$ ksi

Shape		W30×				W27×							
		99		90[v]		539[h]		368[h]		336[h]		307[h]	
Design		ASD	LRFD	ASD	LRFD	ASD	LRFD	ASD	LRFD	ASD	LRFD	ASD	LRFD
Span, ft	10	618	927										
	11	566	851	498	749								
	12	519	780	471	708								
	13	479	720	435	653								
	14	445	669	403	606	2560	3840	1680	2520	1510	2270		
	15	415	624	377	566	2510	3780	1650	2480	1500	2260	1370	2060
	16	389	585	353	531	2360	3540	1550	2330	1410	2120	1280	1930
	17	366	551	332	499	2220	3340	1460	2190	1330	1990	1210	1820
	18	346	520	314	472	2100	3150	1380	2070	1250	1880	1140	1720
	19	328	493	297	447	1990	2980	1300	1960	1190	1780	1080	1630
	20	311	468	282	425	1890	2840	1240	1860	1130	1700	1030	1550
	21	297	446	269	404	1800	2700	1180	1770	1070	1610	979	1470
	22	283	425	257	386	1710	2580	1130	1690	1030	1540	934	1400
	23	271	407	246	369	1640	2470	1080	1620	981	1470	894	1340
	24	259	390	235	354	1570	2360	1030	1550	940	1410	857	1290
	25	249	374	226	340	1510	2270	990	1490	902	1360	822	1240
	26	240	360	217	327	1450	2180	952	1430	867	1300	791	1190
	27	231	347	209	314	1400	2100	917	1380	835	1260	761	1140
	28	222	334	202	303	1350	2030	884	1330	806	1210	734	1100
	29	215	323	195	293	1300	1960	853	1280	778	1170	709	1070
	30	208	312	188	283	1260	1890	825	1240	752	1130	685	1030
	32	195	293	177	265	1180	1770	773	1160	705	1060	642	966
	34	183	275	166	250	1110	1670	728	1090	663	997	605	909
	36	173	260	157	236	1050	1580	688	1030	627	942	571	858
	38	164	246	149	223	993	1490	651	979	594	892	541	813
	40	156	234	141	212	943	1420	619	930	564	848	514	773
	42	148	223	134	202	898	1350	589	886	537	807	489	736
	44	142	213	128	193	857	1290	563	845	513	770	467	702
	46	135	203	123	185	820	1230	538	809	490	737	447	672
	48	130	195	118	177	786	1180	516	775	470	706	428	644
	50	125	187	113	170	754	1130	495	744	451	678	411	618
	52	120	180	109	163	725	1090	476	715	434	652	395	594
	54	115	173	105	157	699	1050	458	689	418	628	381	572
	56	111	167	101	152	674	1010	442	664	403	605	367	552
	58	107	161	97.4	146	650	978	427	641	389	584	354	533
	60	104	156	94.1	142	629	945	413	620	376	565	343	515
	62	100	151	91.1	137	608	915	399	600	364	547	332	496
	64	97.3	146	88.3	133	589	886	387	581	352	530	321	483
	66	94.4	142	85.6	129	572	859	375	564	342	514	311	468
	68	91.6	138	83.1	125	555	834	364	547	332	499	302	454
	70	89.0	134	80.7	121	539	810	354	531	322	484	294	441
	72	86.5	130	78.5	118	524	788	344	517	313	471	286	429
Beam Properties													
W_c/Ω_b	$\phi_b W_c$, kip-ft	6230	9360	5650	8490	37700	56700	24800	37200	22600	33900	20600	30900
M_p/Ω_b	$\phi_b M_p$, kip-ft	778	1170	706	1060	4720	7090	3090	4650	2820	4240	2570	3860
M_r/Ω_b	$\phi_b M_r$, kip-ft	470	706	428	643	2740	4120	1850	2780	1700	2550	1550	2330
BF/Ω_b	$\phi_b BF$, kips	22.2	33.4	20.6	30.8	26.2	39.3	24.9	37.6	25.0	37.7	25.1	37.7
V_n/Ω_v	$\phi_v V_n$, kips	309	463	249	374	1280	1920	839	1260	756	1130	687	1030
Z_x, in.^{3}		312		283		1890		1240		1130		1030	
L_p, ft		7.42		7.38		12.9		12.3		12.2		12.0	
L_r, ft		21.3		20.9		88.5		62.0		57.0		52.6	

ASD	LRFD
$\Omega_b = 1.67$	$\phi_b = 0.90$
$\Omega_v = 1.50$	$\phi_v = 1.00$

[h] Flange thickness greater than 2 in. Special requirements may apply per AISC *Specification* Section A3.1c.

[v] Shape does not meet the h/t_w limit for shear in AISC *Specification* Section G2.1(a) with $F_y = 50$ ksi; therefore, $\phi_v = 0.90$ and $\Omega_v = 1.67$.

F_y = 50 ksi

Table 3-6 (continued)
Maximum Total Uniform Load, kips
W-Shapes

Shape		W27×											
		281		258		235		217		194		178	
Design		ASD	LRFD	ASD	LRFD	ASD	LRFD	ASD	LRFD	ASD	LRFD	ASD	LRFD
Span, ft	14			1140	1710	1040	1570			843	1260	806	1210
	15	1240	1860	1130	1700	1030	1540	943	1410	840	1260	758	1140
	16	1170	1760	1060	1600	963	1450	887	1330	787	1180	711	1070
	17	1100	1650	1000	1500	906	1360	835	1250	741	1110	669	1010
	18	1040	1560	945	1420	856	1290	788	1190	700	1050	632	950
	19	983	1480	895	1350	811	1220	747	1120	663	996	599	900
	20	934	1400	850	1280	770	1160	710	1070	630	947	569	855
	21	890	1340	810	1220	734	1100	676	1020	600	901	542	814
	22	849	1280	773	1160	700	1050	645	970	572	860	517	777
	23	812	1220	739	1110	670	1010	617	927	548	823	495	743
	24	778	1170	709	1070	642	965	591	889	525	789	474	713
	25	747	1120	680	1020	616	926	566	853	504	757	455	684
	26	719	1080	654	983	593	891	546	820	484	728	438	658
	27	692	1040	630	947	571	858	526	790	466	701	421	633
	28	667	1000	607	913	550	827	507	762	450	676	406	611
	29	644	968	586	881	531	799	489	736	434	653	392	590
	30	623	936	567	852	514	772	473	711	420	631	379	570
	32	584	878	531	799	482	724	443	667	394	592	356	534
	34	549	826	500	752	453	681	417	627	370	557	335	503
	36	519	780	472	710	428	643	394	593	350	526	316	475
	38	492	739	448	673	406	609	373	561	331	498	299	450
	40	467	702	425	639	385	579	355	533	315	473	284	428
	42	445	669	405	609	367	551	338	508	300	451	271	407
	44	425	638	386	581	350	526	323	485	286	430	259	389
	46	406	610	370	556	335	503	309	464	274	412	247	372
	48	389	585	354	533	321	483	296	444	262	394	237	356
	50	374	562	340	511	308	463	284	427	252	379	228	342
	52	359	540	327	492	296	445	273	410	242	364	219	329
	54	346	520	315	473	285	429	263	395	233	351	211	317
	56	334	501	304	456	275	414	253	381	225	338	203	305
	58	322	484	293	441	266	399	245	368	217	326	196	295
	60	311	468	283	426	257	386	237	356	210	316	190	285
	62	301	453	274	412	249	374	229	344	203	305	184	276
	64	292	439	266	399	241	362	222	333	197	296	178	267
	66	283	425	258	387	233	351	215	323	191	287	172	259
	68	275	413	250	376	227	341	209	314	185	278	167	251
	70	267	401	243	365	220	331	203	305	180	270		
	72	259	390	236	355								
Beam Properties													
W_c/Ω_b	$\phi_b W_c$, kip-ft	18700	28100	17000	25600	15400	23200	14200	21300	12600	18900	11400	17100
M_p/Ω_b	$\phi_b M_p$, kip-ft	2340	3510	2130	3200	1930	2900	1770	2670	1570	2370	1420	2140
M_r/Ω_b	$\phi_b M_r$, kip-ft	1420	2140	1300	1960	1180	1780	1100	1650	976	1470	882	1330
BF/Ω_b	$\phi_b BF$, kips	24.8	36.9	24.4	36.5	24.1	36.0	23.0	35.1	22.3	33.8	21.6	32.5
V_n/Ω_v	$\phi_v V_n$, kips	621	932	568	853	522	784	471	707	422	632	403	605
Z_x, in.^{3}		936		852		772		711		631		570	
L_p, ft		12.0		11.9		11.8		11.7		11.6		11.5	
L_r, ft		49.1		45.9		42.9		40.8		38.2		36.4	

ASD	LRFD
Ω_b = 1.67	ϕ_b = 0.90
Ω_v = 1.50	ϕ_v = 1.00

Note: For beams laterally unsupported, see Table 3-10.
Available strength tabulated above heavy line is limited by available shear strength.

W27

Table 3-6 (continued)
Maximum Total Uniform Load, kips
W-Shapes

F_y = 50 ksi

Shape		W27× 161		146		129		114		102		94	
Design		ASD	LRFD	ASD	LRFD	ASD	LRFD	ASD	LRFD	ASD	LRFD	ASD	LRFD
Span, ft	10									558	837	527	791
	11					673	1010	622	934	553	832	504	758
	12					657	988	571	858	507	763	462	695
	13			663	995	606	912	527	792	468	704	427	642
	14	729	1090	662	994	563	846	489	735	435	654	396	596
	15	685	1030	617	928	526	790	456	686	406	610	370	556
	16	642	966	579	870	493	741	428	643	380	572	347	521
	17	605	909	545	819	464	697	403	605	358	538	326	491
	18	571	858	515	773	438	658	380	572	338	508	308	463
	19	541	813	487	733	415	624	360	542	320	482	292	439
	20	514	773	463	696	394	593	342	515	304	458	277	417
	21	489	736	441	663	375	564	326	490	290	436	264	397
	22	467	702	421	633	358	539	311	468	277	416	252	379
	23	447	672	403	605	343	515	298	447	265	398	241	363
	24	428	644	386	580	329	494	285	429	254	381	231	348
	25	411	618	370	557	315	474	274	412	244	366	222	334
	26	395	594	356	535	303	456	263	396	234	352	213	321
	27	381	572	343	516	292	439	254	381	225	339	206	309
	28	367	552	331	497	282	423	245	368	217	327	198	298
	29	354	533	319	480	272	409	236	355	210	316	191	288
	30	343	515	309	464	263	395	228	343	203	305	185	278
	32	321	483	289	435	246	370	214	322	190	286	173	261
	34	302	454	272	409	232	349	201	303	179	269	163	245
	36	286	429	257	387	219	329	190	286	169	254	154	232
	38	271	407	244	366	207	312	180	271	160	241	146	219
	40	257	386	232	348	197	296	171	257	152	229	139	209
	42	245	368	221	331	188	282	163	245	145	218	132	199
	44	234	351	210	316	179	269	156	234	138	208	126	190
	46	223	336	201	303	171	258	149	224	132	199	121	181
	48	214	322	193	290	164	247	143	214	127	191	116	174
	50	206	309	185	278	158	237	137	206	122	183	111	167
	52	198	297	178	268	152	228	132	198	117	176	107	160
	54	190	286	172	258	146	219	127	191	113	169	103	154
	56	184	276	165	249	141	212	122	184	109	163	99.1	149
	58	177	266	160	240	136	204	118	177	105	158	95.7	144
	60	171	258	154	232	131	198	114	172	101	153	92.5	139
	62	166	249	149	225	127	191	110	166	98.2	148	89.5	135
	64	161	241	145	218	123	185	107	161	95.1	143	86.7	130
	66	156	234	140	211	119	180	104	156	92.2	139	84.1	126
	68	151	227	136	205	116	174	101	151				
Beam Properties													
M_n/Ω_b	$\phi_b M_n$, kip-ft	10300	15500	9260	13900	7880	11900	6850	10300	6090	9150	5550	8340
M_p/Ω_b	$\phi_b M_p$, kip-ft	1280	1930	1160	1740	986	1480	856	1290	761	1140	694	1040
M_r/Ω_b	$\phi_b M_r$, kip-ft	800	1200	723	1090	603	906	522	785	466	701	424	638
BF/Ω_b	$\phi_b BF$, kips	20.6	31.3	19.9	29.5	23.4	35.0	21.7	32.8	20.1	29.8	19.1	28.5
V_n/Ω_v	$\phi_v V_n$, kips	364	546	332	497	337	505	311	467	279	419	264	395
Z_x, in.[3]		515		464		395		343		305		278	
L_p, ft		11.4		11.3		7.81		7.70		7.59		7.49	
L_r, ft		34.7		33.3		24.2		23.1		22.3		21.6	

ASD	LRFD
Ω_b = 1.67	ϕ_b = 0.90
Ω_v = 1.50	ϕ_v = 1.00

[b] Flange thickness greater than 2 in. Special requirements may apply per AISC *Specification* Section A3.1c.

Table 3-6 (continued)
Maximum Total Uniform Load, kips
W-Shapes

F_y = 50 ksi

W27-W24

Shape		W27×		W24×									
		84		370[h]		335[h]		306[h]		279[h]		250	
Design		ASD	LRFD	ASD	LRFD	ASD	LRFD	ASD	LRFD	ASD	LRFD	ASD	LRFD
Span, ft	9	491	737										
	10	487	732										
	11	443	665										
	12	406	610										
	13	375	563	1700	2550	1520	2280	1370	2050	1240	1860	1090	1640
	14	348	523	1610	2420	1450	2190	1310	1980	1190	1790	1060	1590
	15	325	488	1500	2260	1360	2040	1230	1840	1110	1670	990	1490
	16	304	458	1410	2120	1270	1910	1150	1730	1040	1570	928	1400
	17	286	431	1330	1990	1200	1800	1080	1630	980	1470	874	1310
	18	271	407	1250	1880	1130	1700	1020	1540	926	1390	825	1240
	19	256	385	1190	1780	1070	1610	969	1460	877	1320	782	1170
	20	244	366	1130	1700	1020	1530	920	1380	833	1250	743	1120
	21	232	349	1070	1610	969	1460	876	1320	794	1190	707	1060
	22	221	333	1030	1540	925	1390	837	1260	758	1140	675	1010
	23	212	318	981	1470	885	1330	800	1200	725	1090	646	970
	24	203	305	940	1410	848	1280	767	1150	694	1040	619	930
	25	195	293	902	1360	814	1220	736	1110	667	1000	594	893
	26	187	282	867	1300	783	1180	708	1060	641	963	571	858
	27	180	271	835	1260	754	1130	682	1020	617	928	550	827
	28	174	261	806	1210	727	1090	657	988	595	895	530	797
	29	168	252	778	1170	702	1060	635	954	575	864	512	770
	30	162	244	752	1130	679	1020	613	922	556	835	495	744
	32	152	229	705	1060	636	956	575	864	521	783	464	698
	34	143	215	663	997	599	900	541	814	490	737	437	656
	36	135	203	627	942	566	850	511	768	463	696	413	620
	38	128	193	594	892	536	805	484	728	439	659	391	587
	40	122	183	564	848	509	765	460	692	417	626	371	558
	42	116	174	537	807	485	729	438	659	397	596	354	531
	44	111	166	513	770	463	695	418	629	379	569	338	507
	46	106	159	490	737	443	665	400	601	362	545	323	485
	48	101	153	470	706	424	638	383	576	347	522	309	465
	50	97.4	146	451	678	407	612	368	553	333	501	297	446
	52	93.7	141	434	652	392	588	354	532	321	482	286	429
	54	90.2	136	418	628	377	567	341	512	309	464	275	413
	56	87.0	131	403	605	364	546	329	494	298	447	265	399
	58	84.0	126	389	584	351	528	317	477	287	432	256	385
	60	81.2	122	376	565	339	510	307	461	278	418	248	372
	62	78.6	118	364	547	328	494	297	446	269	404	240	360
	64	76.1	114	352	530	318	478	288	432	260	391	232	349
	66	73.8	111	342	514	308	464	279	419	253	380		
	68			332	499	299	450						
	70			322	484								
Beam Properties													
W_c/Ω_b	$\phi_b W_c$, kip-ft	4870	7320	22600	33900	20400	30600	18400	27700	16700	25100	14900	22300
M_p/Ω_b	$\phi_b M_p$, kip-ft	609	915	2820	4240	2540	3830	2300	3460	2080	3130	1860	2790
M_r/Ω_b	$\phi_b M_r$, kip-ft	372	559	1670	2510	1510	2270	1380	2070	1250	1880	1120	1690
BF/Ω_b	$\phi_b BF$, kips	17.6	26.4	20.0	30.0	19.9	30.2	19.7	29.8	19.7	29.6	19.7	29.3
V_n/Ω_v	$\phi_v V_n$, kips	246	368	851	1280	759	1140	683	1020	619	929	547	821
Z_x, in.^{3}		244		1130		1020		922		835		744	
L_p, ft		7.31		11.6		11.4		11.3		11.2		11.1	
L_r, ft		20.8		69.2		63.1		57.9		53.4		48.7	

ASD	LRFD
$\Omega_b = 1.67$	$\phi_b = 0.90$
$\Omega_v = 1.50$	$\phi_v = 1.00$

Note: For beams laterally unsupported, see Table 3-10.
Available strength tabulated above heavy line is limited by available shear strength.

W24

Table 3-6 (continued)
Maximum Total Uniform Load, kips
W-Shapes

F_y = 50 ksi

Shape		W24×											
		229		207		192		176		162		146	
Design		ASD	LRFD	ASD	LRFD	ASD	LRFD	ASD	LRFD	ASD	LRFD	ASD	LRFD
Span, ft	13	998	1500	894	1340	826	1240	756	1130	705	1060	642	963
	14	962	1450	864	1300	797	1200	729	1100	667	1000	596	896
	15	898	1350	806	1210	744	1120	680	1020	623	936	556	836
	16	842	1270	756	1140	697	1050	637	958	584	878	521	784
	17	793	1190	712	1070	656	986	600	902	549	826	491	738
	18	749	1130	672	1010	620	932	567	852	519	780	464	697
	19	709	1070	637	957	587	883	537	807	492	739	439	660
	20	674	1010	605	909	558	839	510	767	467	702	417	627
	21	642	964	576	866	531	799	486	730	445	669	397	597
	22	612	920	550	826	507	762	464	697	425	638	379	570
	23	586	880	526	790	485	729	443	667	406	610	363	545
	24	561	844	504	758	465	699	425	639	389	585	348	523
	25	539	810	484	727	446	671	408	613	374	562	334	502
	26	518	779	465	699	429	645	392	590	359	540	321	482
	27	499	750	448	673	413	621	378	568	346	520	309	464
	28	481	723	432	649	398	599	364	548	334	501	298	448
	29	465	698	417	627	385	578	352	529	322	484	288	432
	30	449	675	403	606	372	559	340	511	311	468	278	418
	32	421	633	378	568	349	524	319	479	292	439	261	392
	34	396	596	356	535	328	493	300	451	275	413	245	369
	36	374	563	336	505	310	466	283	426	259	390	232	348
	38	355	533	318	478	294	441	268	403	246	369	220	330
	40	337	506	302	455	279	419	255	383	234	351	209	314
	42	321	482	288	433	266	399	243	365	222	334	199	299
	44	306	460	275	413	254	381	232	348	212	319	190	285
	46	293	440	263	395	243	365	222	333	203	305	181	273
	48	281	422	252	379	232	349	212	319	195	293	174	261
	50	269	405	242	364	223	335	204	307	187	281	167	251
	52	259	389	233	350	215	323	196	295	180	270	160	241
	54	250	375	224	337	207	311	189	284	173	260	155	232
	56	241	362	216	325	199	299	182	274	167	251	149	224
	58	232	349	209	313	192	289	176	264	161	242	144	216
	60	225	338	202	303	186	280	170	256	156	234	139	209
	62	217	327	195	293	180	270	165	247	151	226		
	64	211	316	189	284								
Beam Properties													
W_b/Ω_b	$\phi_b W_b$, kip-ft	13500	20300	12100	18200	11200	16800	10200	15300	9340	14000	8340	12500
M_p/Ω_b	$\phi_b M_p$, kip-ft	1680	2530	1510	2270	1390	2100	1270	1920	1170	1760	1040	1570
M_r/Ω_b	$\phi_b M_r$, kip-ft	1030	1540	927	1390	858	1290	786	1180	723	1090	648	974
BF/Ω_b	$\phi_b BF$, kips	19.0	28.9	18.9	28.6	18.4	28.0	18.1	27.7	17.9	26.8	17.0	25.8
V_n/Ω_v	$\phi_v V_n$, kips	499	749	447	671	413	620	378	567	353	529	321	482
Z_x, in.^{3}		675		606		559		511		468		418	
L_p, ft		11.0		10.9		10.8		10.7		10.8		10.6	
L_r, ft		45.2		41.7		39.7		37.4		35.8		33.7	

ASD	LRFD
Ω_b = 1.67	ϕ_b = 0.90
Ω_v = 1.50	ϕ_v = 1.00

Table 3-6 (continued)
Maximum Total Uniform Load, kips
W-Shapes

F_y = 50 ksi

W24

Shape		W24×											
		131		117		104		103		94		84	
Design		ASD	LRFD	ASD	LRFD	ASD	LRFD	ASD	LRFD	ASD	LRFD	ASD	LRFD
Span, ft	9											453	680
	10							539	809	501	751	447	672
	11					482	723	508	764	461	693	406	611
	12	593	889	535	802	481	723	466	700	422	635	373	560
	13	568	854	502	755	444	667	430	646	390	586	344	517
	14	528	793	466	701	412	619	399	600	362	544	319	480
	15	492	740	435	654	385	578	373	560	338	508	298	448
	16	462	694	408	613	361	542	349	525	317	476	279	420
	17	434	653	384	577	339	510	329	494	298	448	263	395
	18	410	617	363	545	320	482	310	467	282	423	248	373
	19	389	584	344	516	304	456	294	442	267	401	235	354
	20	369	555	326	491	288	434	279	420	253	381	224	336
	21	352	529	311	467	275	413	266	400	241	363	213	320
	22	336	505	297	446	262	394	254	382	230	346	203	305
	23	321	483	284	427	251	377	243	365	220	331	194	292
	24	308	463	272	409	240	361	233	350	211	318	186	280
	25	295	444	261	392	231	347	224	336	203	305	179	269
	26	284	427	251	377	222	333	215	323	195	293	172	258
	27	274	411	242	363	214	321	207	311	188	282	166	249
	28	264	396	233	350	206	310	200	300	181	272	160	240
	29	255	383	225	338	199	299	193	290	175	263	154	232
	30	246	370	218	327	192	289	186	280	169	254	149	224
	32	231	347	204	307	180	271	175	263	158	238	140	210
	34	217	326	192	289	170	255	164	247	149	224	132	198
	36	205	308	181	273	160	241	155	233	141	212	124	187
	38	194	292	172	258	152	228	147	221	133	201	118	177
	40	185	278	163	245	144	217	140	210	127	191	112	168
	42	176	264	155	234	137	206	133	200	121	181	106	160
	44	168	252	148	223	131	197	127	191	115	173	102	153
	46	161	241	142	213	125	188	121	183	110	166	97.2	146
	48	154	231	136	204	120	181	116	175	106	159	93.1	140
	50	148	222	131	196	115	173	112	168	101	152	89.4	134
	52	142	213	126	189	111	167	107	162	97.5	147	86.0	129
	54	137	206	121	182	107	161	103	156	93.9	141	82.8	124
	56	132	198	117	175	103	155	99.8	150	90.5	136	79.8	120
	58	127	191	113	169	99.5	149	96.4	145	87.4	131	77.1	116
	60	123	185	109	164	96.1	145	93.1	140	84.5	127	74.5	112
Beam Properties													
W_c/Ω_b	$\phi_b W_c$, kip-ft	7390	11100	6530	9810	5770	8670	5590	8400	5070	7620	4470	6720
M_p/Ω_b	$\phi_b M_p$, kip-ft	923	1390	816	1230	721	1080	699	1050	634	953	559	840
M_r/Ω_b	$\phi_b M_r$, kip-ft	575	864	508	764	451	677	428	643	388	583	342	515
BF/Ω_b	$\phi_b BF$, kips	16.3	24.6	15.4	23.3	14.3	21.3	18.2	27.4	17.3	26.0	16.2	24.2
V_n/Ω_v	$\phi_v V_n$, kips	296	445	267	401	241	362	270	405	250	375	227	340
Z_x, in.^{3}		370		327		289		280		254		224	
L_p, ft		10.5		10.4		10.3		7.03		6.99		6.89	
L_r, ft		31.9		30.4		29.2		21.9		21.2		20.3	

ASD	LRFD
Ω_b = 1.67	ϕ_b = 0.90
Ω_v = 1.50	ϕ_v = 1.00

Note: For beams laterally unsupported, see Table 3-10.
Available strength tabulated above heavy line is limited by available shear strength.

W24-W21

Table 3-6 (continued)
Maximum Total Uniform Load, kips
W-Shapes

F_y = 50 ksi

Shape		W24×								W21×			
		76		68		62		55[v]		201		182	
Design		ASD	LRFD	ASD	LRFD	ASD	LRFD	ASD	LRFD	ASD	LRFD	ASD	LRFD
Span, ft	7					408	611	335	503				
	8					382	574	334	503				
	9	421	631	393	590	339	510	297	447				
	10	399	600	353	531	305	459	267	402				
	11	363	545	321	483	278	417	243	365				
	12	333	500	294	443	254	383	223	335	837	1260	754	1130
	13	307	462	272	408	235	353	206	309	814	1220	731	1100
	14	285	429	252	379	218	328	191	287	756	1140	679	1020
	15	266	400	236	354	204	306	178	268	705	1060	633	952
	16	250	375	221	332	191	287	167	251	661	994	594	893
	17	235	353	208	312	180	270	157	236	622	935	559	840
	18	222	333	196	295	170	255	149	223	588	883	528	793
	19	210	316	186	279	161	242	141	212	557	837	500	752
	20	200	300	177	266	153	230	134	201	529	795	475	714
	21	190	286	168	253	145	219	127	191	504	757	452	680
	22	181	273	161	241	139	209	122	183	481	723	432	649
	23	174	261	154	231	133	200	116	175	460	691	413	621
	24	166	250	147	221	127	191	111	168	441	663	396	595
	25	160	240	141	212	122	184	107	161	423	636	380	571
	26	154	231	136	204	117	177	103	155	407	612	365	549
	27	148	222	131	197	113	170	99.1	149	392	589	352	529
	28	143	214	126	190	109	164	95.5	144	378	568	339	510
	29	138	207	122	183	105	158	92.2	139	365	548	328	492
	30	133	200	118	177	102	153	89.2	134	353	530	317	476
	32	125	188	110	166	95.4	143	83.6	126	331	497	297	446
	34	117	176	104	156	89.8	135	78.7	118	311	468	279	420
	36	111	167	98.1	148	84.8	128	74.3	112	294	442	264	397
	38	105	158	93.0	140	80.4	121	70.4	106	278	418	250	376
	40	99.8	150	88.3	133	76.3	115	66.9	101	264	398	238	357
	42	95.0	143	84.1	126	72.7	109	63.7	95.7	252	379	226	340
	44	90.7	136	80.3	121	69.4	104	60.8	91.4	240	361	216	325
	46	86.8	130	76.8	115	66.4	99.8	58.1	87.4	230	346	207	310
	48	83.2	125	73.6	111	63.6	95.6	55.7	83.8	220	331	198	298
	50	79.8	120	70.7	106	61.1	91.8	53.5	80.4	212	318	190	286
	52	76.8	115	67.9	102	58.7	88.3	51.4	77.3	203	306	183	275
	54	73.9	111	65.4	98.3	56.6	85.0	49.5	74.4	196	294	176	264
	56	71.3	107	63.1	94.8	54.5	82.0	47.8	71.8	189	284	170	255
	58	68.8	103	60.9	91.6	52.7	79.1	46.1	69.3				
Beam Properties													
W_p/Ω_b	$\phi_b W_p$, kip-ft	3990	6000	3530	5310	3050	4590	2670	4020	10600	15900	9500	14300
M_p/Ω_b	$\phi_b M_p$, kip-ft	499	750	442	664	382	574	334	503	1320	1990	1190	1790
M_r/Ω_b	$\phi_b M_r$, kip-ft	307	462	269	404	229	344	199	299	805	1210	728	1090
BF/Ω_b	$\phi_b BF$, kips	15.1	22.6	14.1	21.2	16.1	24.1	14.7	22.2	14.5	22.0	14.4	21.8
V_n/Ω_v	$\phi_v V_n$, kips	210	316	197	295	204	306	167	252	419	628	377	565
Z_x, in.^{3}		200		177		153		134		530		476	
L_p, ft		6.78		6.61		4.87		4.73		10.7		10.6	
L_r, ft		19.5		18.9		14.4		13.9		46.2		42.7	

ASD	LRFD
Ω_b = 1.67	ϕ_b = 0.90
Ω_v = 1.50	ϕ_v = 1.00

[v] Shape does not meet the h/t_w limit for shear in AISC *Specification* Section G2.1(a) with F_y = 50 ksi; therefore, ϕ_v = 0.90 and Ω_v = 1.67.

Table 3-6 (continued)

Maximum Total Uniform Load, kips

W-Shapes

F_y = 50 ksi

W21

Shape		W21×											
		166		147		132		122		111		101	
Design		ASD	LRFD	ASD	LRFD	ASD	LRFD	ASD	LRFD	ASD	LRFD	ASD	LRFD
Span, ft	11			636	955	567	850	521	781	473	710	428	642
	12	675	1010	620	933	554	833	511	768	464	698	421	633
	13	663	997	573	861	511	768	471	708	428	644	388	584
	14	616	926	532	799	475	714	438	658	398	598	361	542
	15	575	864	496	746	443	666	409	614	371	558	337	506
	16	539	810	465	699	415	624	383	576	348	523	316	474
	17	507	762	438	658	391	588	360	542	328	492	297	446
	18	479	720	414	622	369	555	340	512	309	465	281	422
	19	454	682	392	589	350	526	323	485	293	441	266	399
	20	431	648	372	560	332	500	306	461	278	419	252	380
	21	411	617	355	533	317	476	292	439	265	399	240	361
	22	392	589	338	509	302	454	279	419	253	380	230	345
	23	375	563	324	487	289	434	266	400	242	364	220	330
	24	359	540	310	466	277	416	255	384	232	349	210	316
	25	345	518	298	448	266	400	245	368	223	335	202	304
	26	332	498	286	430	256	384	236	354	214	322	194	292
	27	319	480	276	414	246	370	227	341	206	310	187	281
	28	308	463	266	400	237	357	219	329	199	299	180	271
	29	297	447	257	386	229	344	211	318	192	289	174	262
	30	287	432	248	373	222	333	204	307	186	279	168	253
	32	269	405	233	350	208	312	191	288	174	262	158	237
	34	254	381	219	329	195	294	180	271	164	246	149	223
	36	240	360	207	311	185	278	170	256	155	233	140	211
	38	227	341	196	294	175	263	161	242	147	220	133	200
	40	216	324	186	280	166	250	153	230	139	209	126	190
	42	205	309	177	266	158	238	146	219	133	199	120	181
	44	196	295	169	254	151	227	139	209	127	190	115	173
	46	187	282	162	243	144	217	133	200	121	182	110	165
	48	180	270	155	233	138	208	128	192	116	174	105	158
	50	172	259	149	224	133	200	123	184	111	167	101	152
	52	166	249	143	215	128	192	118	177	107	161	97.1	146
	54	160	240	138	207	123	185	113	171				
	56	154	231										
Beam Properties													
W_c/Ω_b	$\phi_b W_c$, kip-ft	8620	13000	7450	11200	6650	9990	6130	9210	5570	8370	5050	7590
M_p/Ω_b	$\phi_b M_p$, kip-ft	1080	1620	931	1400	831	1250	766	1150	696	1050	631	949
M_r/Ω_b	$\phi_b M_r$, kip-ft	664	998	575	864	515	774	477	717	435	654	396	596
BF/Ω_b	$\phi_b BF$, kips	14.2	21.2	13.7	20.7	13.2	19.9	12.9	19.3	12.4	18.9	11.8	17.7
V_n/Ω_v	$\phi_v V_n$, kips	338	506	318	477	283	425	260	391	237	355	214	321
Z_x, in.^{3}		432		373		333		307		279		253	
L_p, ft		10.6		10.4		10.3		10.3		10.2		10.2	
L_r, ft		39.9		36.3		34.2		32.7		31.2		30.1	

ASD	LRFD
Ω_b = 1.67	ϕ_b = 0.90
Ω_v = 1.50	ϕ_v = 1.00

Note: For beams laterally unsupported, see Table 3-10.
Available strength tabulated above heavy line is limited by available shear strength.

W21

Table 3-6 (continued)
Maximum Total Uniform Load, kips
W-Shapes

F_y = 50 ksi

Shape		W21×									
		93		83		73		68		62	
Design		ASD	LRFD	ASD	LRFD	ASD	LRFD	ASD	LRFD	ASD	LRFD
Span, ft	8	501	752	441	661	386	579	363	544	336	504
	9	490	737	435	653	381	573	355	533	319	480
	10	441	663	391	588	343	516	319	480	287	432
	11	401	603	356	535	312	469	290	436	261	393
	12	368	553	326	490	286	430	266	400	240	360
	13	339	510	301	452	264	397	246	369	221	332
	14	315	474	279	420	245	369	228	343	205	309
	15	294	442	261	392	229	344	213	320	192	288
	16	276	414	245	368	215	323	200	300	180	270
	17	259	390	230	346	202	304	188	282	169	254
	18	245	368	217	327	191	287	177	267	160	240
	19	232	349	206	309	181	272	168	253	151	227
	20	221	332	196	294	172	258	160	240	144	216
	21	210	316	186	280	163	246	152	229	137	206
	22	201	301	178	267	156	235	145	218	131	196
	23	192	288	170	256	149	224	139	209	125	188
	24	184	276	163	245	143	215	133	200	120	180
	25	176	265	156	235	137	206	128	192	115	173
	26	170	255	150	226	132	198	123	185	111	166
	27	163	246	145	218	127	191	118	178	106	160
	28	158	237	140	210	123	184	114	171	103	154
	29	152	229	135	203	118	176	110	166	99.1	149
	30	147	221	130	196	114	172	106	160	95.8	144
	32	138	207	122	184	107	161	99.8	150	89.8	135
	34	130	195	115	173	101	152	93.9	141	84.5	127
	36	123	184	109	163	95.4	143	88.7	133	79.8	120
	38	116	174	103	155	90.3	136	84.0	126	75.6	114
	40	110	166	97.8	147	85.8	129	79.8	120	71.9	108
	42	105	158	93.1	140	81.7	123	76.0	114	68.4	103
	44	100	151	88.9	134	78.0	117	72.6	109	65.3	98.2
	46	95.9	144	85.0	128	74.6	112	69.4	104	62.5	93.9
	48	91.9	138	81.5	122	71.5	108	66.5	100	59.9	90.0
	50	88.2	133	78.2	118	68.7	103	63.9	96.0	57.5	86.4
	52	84.8	128	75.2	113	66.0	99.2	61.4	92.3	55.3	83.1
	54	81.7	123								
Beam Properties											
W_c/Ω_b	$\phi_b W_c$, kip-ft	4410	6630	3910	5880	3430	5160	3190	4800	2870	4320
M_p/Ω_b	$\phi_b M_p$, kip-ft	551	829	489	735	429	645	399	600	359	540
M_r/Ω_b	$\phi_b M_r$, kip-ft	335	504	299	449	264	396	245	368	222	333
BF/Ω_b	$\phi_b BF$, kips	14.6	22.0	13.8	20.8	12.9	19.4	12.5	18.8	11.6	17.5
V_n/Ω_v	$\phi_v V_n$, kips	251	376	220	331	193	289	181	272	168	252
Z_x, in.^{3}		221		196		172		160		144	
L_p, ft		6.50		6.46		6.39		6.36		6.25	
L_r, ft		21.3		20.2		19.2		18.7		18.1	

ASD	LRFD
Ω_b = 1.67	ϕ_b = 0.90
Ω_v = 1.50	ϕ_v = 1.00

[1] Shape does not meet compact limit for flexure with F_y = 50 ksi.

F_y = 50 ksi

Table 3-6 (continued)
Maximum Total Uniform Load, kips
W-Shapes

W21

Shape		W21×									
		57		55		50		48[f]		44	
Design		ASD	LRFD	ASD	LRFD	ASD	LRFD	ASD	LRFD	ASD	LRFD
Span, ft	6					316	474			290	435
	7	342	513			314	471	288	433	272	409
	8	322	484	312	468	274	413	265	398	238	358
	9	286	430	279	420	244	367	235	354	212	318
	10	257	387	251	378	220	330	212	318	190	286
	11	234	352	229	344	200	300	193	289	173	260
	12	215	323	210	315	183	275	176	265	159	239
	13	198	298	193	291	169	254	163	245	146	220
	14	184	276	180	270	157	236	151	227	136	204
	15	172	258	168	252	146	220	141	212	127	191
	16	161	242	157	236	137	206	132	199	119	179
	17	151	228	148	222	129	194	125	187	112	168
	18	143	215	140	210	122	183	118	177	106	159
	19	136	204	132	199	116	174	111	168	100	151
	20	129	194	126	189	110	165	106	159	95.2	143
	21	123	184	120	180	105	157	101	152	90.7	136
	22	117	176	114	172	99.8	150	96.3	145	86.6	130
	23	112	168	109	164	95.5	143	92.1	138	82.8	124
	24	107	161	105	158	91.5	138	88.2	133	79.3	119
	25	103	155	101	151	87.8	132	84.7	127	76.2	114
	26	99.0	149	96.7	145	84.4	127	81.5	122	73.2	110
	27	95.4	143	93.1	140	81.3	122	78.4	118	70.5	106
	28	92.0	138	89.8	135	78.4	118	75.6	114	68.0	102
	29	88.8	133	86.7	130	75.7	114	73.0	110	65.7	98.7
	30	85.8	129	83.8	126	73.2	110	70.6	106	63.5	95.4
	32	80.5	121	78.6	118	68.6	103	66.2	99.5	59.5	89.4
	34	75.7	114	74.0	111	64.6	97.1	62.3	93.6	56.0	84.2
	36	71.5	108	69.9	105	61.0	91.7	58.8	88.4	52.9	79.5
	38	67.8	102	66.2	99.5	57.8	86.8	55.7	83.8	50.1	75.3
	40	64.4	96.8	62.9	94.5	54.9	82.5	52.9	79.6	47.6	71.6
	42	61.3	92.1	59.9	90.0	52.3	78.6	50.4	75.8	45.3	68.1
	44	58.5	88.0	57.2	85.9	49.9	75.0	48.1	72.3	43.3	65.0
	46	56.0	84.1	54.7	82.2	47.7	71.7	46.0	69.2	41.4	62.2
	48	53.6	80.6	52.4	78.8	45.7	68.8	44.1	66.3	39.7	59.6
	50	51.5	77.4	50.3	75.6	43.9	66.0	42.4	63.7	38.1	57.2
	52	49.5	74.4	48.4	72.7	42.2	63.5				
Beam Properties											
W_c/Ω_b	$\phi_b W_c$, kip-ft	2570	3870	2510	3780	2200	3300	2120	3180	1900	2860
M_p/Ω_b	$\phi_b M_p$, kip-ft	322	484	314	473	274	413	265	398	238	358
M_r/Ω_b	$\phi_b M_r$, kip-ft	194	291	192	289	165	248	162	244	143	214
BF/Ω_b	$\phi_b BF$, kips	13.4	20.3	10.8	16.3	12.1	18.3	9.89	14.8	11.1	16.8
V_n/Ω_v	$\phi_v V_n$, kips	171	256	156	234	158	237	144	216	145	217
Z_x, in.^{3}		129		126		110		107		95.4	
L_p, ft		4.77		6.11		4.59		6.09		4.45	
L_r, ft		14.3		17.4		13.6		16.5		13.0	

ASD	LRFD
Ω_b = 1.67	ϕ_b = 0.90
Ω_v = 1.50	ϕ_v = 1.00

Note: For beams laterally unsupported, see Table 3-10.
Available strength tabulated above heavy line is limited by available shear strength.

W18

Table 3-6 (continued)
Maximum Total Uniform Load, kips
W-Shapes

F_y = 50 ksi

Shape		W18×											
		311[b]		283[b]		258[b]		234[b]		211		192	
Design		ASD	LRFD	ASD	LRFD	ASD	LRFD	ASD	LRFD	ASD	LRFD	ASD	LRFD
Span, ft	11	1360	2030	1230	1840	1100	1650	979	1470	878	1320	783	1180
	12	1250	1890	1120	1690	1020	1530	913	1370	815	1230	735	1110
	13	1160	1740	1040	1560	938	1410	843	1270	752	1130	679	1020
	14	1070	1620	964	1450	871	1310	783	1180	699	1050	630	947
	15	1000	1510	900	1350	813	1220	731	1100	652	980	588	884
	16	941	1410	843	1270	762	1150	685	1030	611	919	551	829
	17	885	1330	794	1190	717	1080	645	969	575	865	519	780
	18	836	1260	750	1130	678	1020	609	915	543	817	490	737
	19	792	1190	710	1070	642	965	577	867	515	774	464	698
	20	752	1130	675	1010	610	917	548	824	489	735	441	663
	21	717	1080	643	966	581	873	522	784	466	700	420	631
	22	684	1030	613	922	554	833	498	749	445	668	401	603
	23	654	983	587	882	530	797	476	716	425	639	384	577
	24	627	943	562	845	508	764	457	686	408	613	368	553
	25	602	905	540	811	488	733	438	659	391	588	353	530
	26	579	870	519	780	469	705	421	633	376	565	339	510
	27	557	838	500	751	452	679	406	610	362	544	327	491
	28	537	808	482	724	436	655	391	588	349	525	315	474
	29	519	780	465	699	421	632	378	568	337	507	304	457
	30	502	754	450	676	407	611	365	549	326	490	294	442
	31	485	730	435	654	393	591	353	531	315	474	285	428
	32	470	707	422	634	381	573	342	515	306	459	276	414
	33	456	685	409	615	370	555	332	499	296	445	267	402
	34	443	665	397	596	359	539	322	484	288	432	259	390
	35	430	646	386	579	348	524	313	471	279	420	252	379
	36	418	628	375	563	339	509	304	458	272	408	245	368
	37	407	611	365	548	330	495	296	445	264	397	238	358
	38	396	595	355	534	321	482	288	433	257	387	232	349
	39	386	580	346	520	313	470	281	422	251	377	226	340
	40	376	566	337	507	305	458	274	412	245	368	221	332
	42	358	539	321	483	290	436	261	392	233	350	210	316
	44	342	514	307	461	277	417	249	374	222	334	201	301
	46	327	492	293	441	265	398	238	358	213	320	192	288
	48	314	471	281	423	254	382	228	343	204	306	184	276
	50	301	452	270	406	244	367	219	329	196	294	176	265
	52	289	435	259	390	235	353	211	317				
	54	279	419	250	376								

Beam Properties

W_b/Ω_b	$\phi_b W_c$, kip-ft	15000	22600	13500	20300	12200	18300	11000	16500	9780	14700	8820	13300
M_p/Ω_b	$\phi_b M_p$, kip-ft	1880	2830	1690	2540	1520	2290	1370	2060	1220	1840	1100	1660
M_r/Ω_b	$\phi_b M_r$, kip-ft	1090	1640	987	1480	898	1350	814	1220	732	1100	664	998
BF/Ω_b	$\phi_b BF$, kips	11.2	16.8	11.1	16.7	10.9	16.5	10.8	16.4	10.7	16.2	10.6	16.1
V_n/Ω_v	$\phi_v V_n$, kips	678	1020	613	920	550	826	490	734	439	658	392	588
Z_x, in.^{3}		754		676		611		549		490		442	
L_p, ft		10.4		10.3		10.2		10.1		9.96		9.85	
L_r, ft		81.1		73.6		67.3		61.4		55.7		51.0	

ASD	LRFD
Ω_b = 1.67	ϕ_b = 0.90
Ω_v = 1.50	ϕ_v = 1.00

[b] Flange thickness greater than 2 in. Special requirements may apply per AISC *Specification* Section A3.1c.

Table 3-6 (continued)
Maximum Total Uniform Load, kips
W-Shapes

F_y = 50 ksi

W18

Shape		W18×											
		175		158		143		130		119		106	
Design		ASD	LRFD	ASD	LRFD	ASD	LRFD	ASD	LRFD	ASD	LRFD	ASD	LRFD
Span, ft	10									498	747	441	662
	11	712	1070	638	957	569	854	517	776	475	715	417	627
	12	662	995	592	890	536	805	482	725	436	655	383	575
	13	611	918	547	822	494	743	445	669	402	605	353	531
	14	567	853	508	763	459	690	413	621	374	561	328	493
	15	530	796	474	712	428	644	386	580	349	524	306	460
	16	497	746	444	668	402	604	362	544	327	491	287	431
	17	467	702	418	628	378	568	340	512	308	462	270	406
	18	441	663	395	593	357	537	322	483	291	437	255	383
	19	418	628	374	562	338	508	305	458	275	414	242	363
	20	397	597	355	534	321	483	289	435	261	393	230	345
	21	378	569	338	509	306	460	278	414	249	374	219	329
	22	361	543	323	485	292	439	263	395	238	357	209	314
	23	345	519	309	464	279	420	252	378	227	342	200	300
	24	331	498	296	445	268	403	241	363	218	328	191	288
	25	318	478	284	427	257	386	232	348	209	314	184	276
	26	306	459	273	411	247	372	223	335	201	302	177	265
	27	294	442	263	396	238	358	214	322	194	291	170	256
	28	284	426	254	381	230	345	207	311	187	281	164	246
	29	274	412	245	368	222	333	200	300	180	271	158	238
	30	265	398	237	356	214	322	193	290	174	262	153	230
	31	256	385	229	345	207	312	187	281	169	254	148	223
	32	248	373	222	334	201	302	181	272	163	246	143	216
	33	241	362	215	324	195	293	175	264	158	238	139	209
	34	234	351	209	314	189	284	170	256	154	231	135	203
	35	227	341	203	305	184	276	165	249	149	225	131	197
	36	221	332	197	297	179	268	161	242	145	218	128	192
	37	215	323	192	289	174	261	156	235	141	212	124	186
	38	209	314	187	281	169	254	152	229	138	207	121	182
	39	204	306	182	274	165	248	148	223	134	202	118	177
	40	199	299	178	267	161	242	145	218	131	197	115	173
	42	189	284	169	254	153	230	138	207	125	187	109	164
	44	181	271	161	243	146	220	132	198	119	179	104	157
	46	173	260	154	232	140	210	126	189	114	171	99.8	150
	48	166	249	148	223	134	201	121	181				
	50	159	239										
Beam Properties													
W_c/Ω_b	$\phi_b W_c$, kip-ft	7940	11900	7110	10700	6430	9660	5790	8700	5230	7860	4590	6900
M_p/Ω_b	$\phi_b M_p$, kip-ft	993	1490	888	1340	803	1210	724	1090	654	983	574	863
M_r/Ω_b	$\phi_b M_r$, kip-ft	601	903	541	814	493	740	447	672	403	606	356	536
BF/Ω_b	$\phi_b BF$, kips	10.6	15.8	10.5	15.9	10.3	15.7	10.2	15.4	10.1	15.2	9.73	14.6
V_n/Ω_v	$\phi_v V_n$, kips	356	534	319	479	285	427	259	388	249	373	221	331
Z_x, in.^{3}		398		356		322		290		262		230	
L_p, ft		9.75		9.68		9.61		9.54		9.50		9.40	
L_r, ft		46.9		42.8		39.6		36.6		34.3		31.8	

ASD	LRFD
Ω_b = 1.67	ϕ_b = 0.90
Ω_v = 1.50	ϕ_v = 1.00

Note: For beams laterally unsupported, see Table 3-10.
Available strength tabulated above heavy line is limited by available shear strength.

W18

Table 3-6 (continued)
Maximum Total Uniform Load, kips
W-Shapes

F_y = 50 ksi

Shape		W18×											
		97		86		76		71		65		60	
Design		ASD	LRFD	ASD	LRFD	ASD	LRFD	ASD	LRFD	ASD	LRFD	ASD	LRFD
Span, ft	7							366	549				
	8							364	548	331	497	302	453
	9							324	487	295	443	273	410
	10	398	597	353	530	309	464	291	438	265	399	246.0	369
	11	383	575	338	507	296	445	265	398	241	363	223	335
	12	351	528	309	465	271	408	243	365	221	333	205	308
	13	324	487	286	429	250	376	224	337	204	307	189	284
	14	301	452	265	399	232	349	208	313	190	285	175	264
	15	281	422	248	372	217	326	194	292	177	266	164	246
	16	263	396	232	349	203	306	182	274	166	249	153	231
	17	248	372	218	328	191	288	171	258	156	235	144	217
	18	234	352	206	310	181	272	162	243	147	222	136	205
	19	222	333	195	294	171	257	153	231	140	210	129	194
	20	211	317	186	279	163	245	146	219	133	200	123	185
	21	201	301	177	266	155	233	139	209	126	190	117	176
	22	191	288	169	254	148	222	132	199	121	181	112	168
	23	183	275	161	243	141	213	127	190	115	173	107	160
	24	175	264	155	233	136	204	121	183	111	166	102	154
	25	168	253	149	223	130	196	117	175	106	160	98.2	148
	26	162	243	143	215	125	188	112	168	102	153	94.4	142
	27	156	234	138	207	120	181	108	162	98.3	148	90.9	137
	28	150	226	133	199	116	175	104	156	94.8	143	87.7	132
	29	145	218	128	192	112	169	100	151	91.5	138	84.7	127
	30	140	211	124	186	108	163	97.1	146	88.5	133	81.8	123
	31	136	204	120	180	105	158	94.0	141	85.6	129	79.2	119
	32	132	198	116	174	102	153	91.1	137	83.0	125	76.7	115
	33	128	192	113	169	98.6	148	88.5	133	80.4	121	74.4	112
	34	124	186	109	164	95.7	144	85.7	129	78.1	117	72.2	109
	35	120	181	106	159	93.0	140	83.3	125	75.8	114	70.1	105
	36	117	176	103	155	90.4	136	80.9	122	73.7	111	68.2	103
	37	114	171	100	151	87.9	132	78.8	118	71.7	108	66.4	99.7
	38	111	167	97.7	147	85.6	129	76.7	115	69.9	105	64.6	97.1
	39	108	162	95.2	143	83.4	125	74.7	112	68.1	102	63.0	94.6
	40	105	158	92.8	140	81.3	122	72.9	110	66.4	99.8	61.4	92.3
	42	100	151	88.4	133	77.5	116	69.4	104	63.2	95.0	58.5	87.9
	44	95.7	144	84.4	127	73.9	111	66.2	99.5	60.3	90.7	55.8	83.9
	46	91.6	138	80.7	121			63.4	95.2	57.7	86.7		
Beam Properties													
W_c/Ω_b	$\phi_b W_c$, kip-ft	4210	6330	3710	5580	3250	4890	2910	4380	2650	3990	2460	3690
M_p/Ω_b	$\phi_b M_p$, kip-ft	526	791	464	698	407	611	364	548	332	499	307	461
M_r/Ω_b	$\phi_b M_r$, kip-ft	328	494	290	436	255	383	222	333	204	307	189	284
BF/Ω_b	$\phi_b BF$, kips	9.41	14.1	9.01	13.6	8.50	12.8	10.4	15.8	9.98	15.0	9.62	14.4
V_n/Ω_v	$\phi_v V_n$, kips	199	299	177	265	155	232	183	275	166	248	151	227
Z_x, in.^{3}		211		186		163		146		133		123	
L_p, ft		9.36		9.29		9.22		6.00		5.97		5.93	
L_r, ft		30.4		28.6		27.1		19.6		18.8		18.2	

ASD	LRFD
Ω_b = 1.67	ϕ_b = 0.90
Ω_v = 1.50	ϕ_v = 1.00

F_y = 50 ksi

Table 3-6 (continued)
Maximum Total Uniform Load, kips
W-Shapes

W18-W16

Shape		W18×										W16×	
		55		50		46		40		35		100	
Design		ASD	LRFD	ASD	LRFD	ASD	LRFD	ASD	LRFD	ASD	LRFD	ASD	LRFD
Span, ft	6					261	391	226	338	212	319		
	7	282	424	256	383	259	389	224	336	190	285		
	8	279	420	252	379	226	340	196	294	166	249		
	9	248	373	224	337	201	302	174	261	147	222	398	597
	10	224	336	202	303	181	272	156	235	133	200	395	594
	11	203	305	183	275	165	247	142	214	121	181	359	540
	12	186	280	168	253	151	227	130	196	111	166	329	495
	13	172	258	155	233	139	209	120	181	102	153	304	457
	14	160	240	144	216	129	194	112	168	94.8	143	282	424
	15	149	224	134	202	121	181	104	157	88.5	133	263	396
	16	140	210	126	189	113	170	97.8	147	83.0	125	247	371
	17	132	198	119	178	106	160	92.1	138	78.1	117	232	349
	18	124	187	112	168	101	151	86.9	131	73.7	111	220	330
	19	118	177	106	159	95.3	143	82.4	124	69.9	105	208	313
	20	112	168	101	152	90.5	136	78.2	118	66.4	99.8	198	297
	21	106	160	96.0	144	86.2	130	74.5	112	63.2	95.0	188	283
	22	102	153	91.6	138	82.3	124	71.1	107	60.3	90.7	180	270
	23	97.2	146	87.7	132	78.7	118	68.0	102	57.7	86.7	172	258
	24	93.1	140	84.0	126	75.4	113	65.2	98.0	55.3	83.1	165	248
	25	89.4	134	80.6	121	72.4	109	62.6	94.1	53.1	79.8	158	238
	26	86.0	129	77.5	117	69.6	105	60.2	90.5	51.1	76.7	152	228
	27	82.8	124	74.7	112	67.1	101	58.0	87.1	49.2	73.9	146	220
	28	79.8	120	72.0	108	64.7	97.2	55.9	84.0	47.4	71.3	141	212
	29	77.1	116	69.5	104	62.4	93.8	54.0	81.1	45.8	68.8	136	205
	30	74.5	112	67.2	101	60.3	90.7	52.2	78.4	44.2	66.5	132	198
	31	72.1	108	65.0	97.7	58.4	87.8	50.5	75.9	42.8	64.4	127	192
	32	69.9	105	63.0	94.7	56.6	85.0	48.9	73.5	41.5	62.3	124	186
	33	67.7	102	61.1	91.8	54.9	82.5	47.4	71.3	40.2	60.5	120	180
	34	65.8	98.8	59.3	89.1	53.2	80.0	46.0	69.2	39.0	58.7	116	175
	35	63.9	96.0	57.6	86.6	51.7	77.7	44.7	67.2	37.9	57.0	113	170
	36	62.1	93.3	56.0	84.2	50.3	75.6	43.5	65.3	36.9	55.4	110	165
	37	60.4	90.8	54.5	81.9	48.9	73.5	42.3	63.6	35.9	53.9	107	161
	38	58.8	88.4	53.1	79.7	47.6	71.6	41.2	61.9	34.9	52.5	104	156
	39	57.3	86.2	51.7	77.7	46.4	69.8	40.1	60.3	34.0	51.2	101	152
	40	55.9	84.0	50.4	75.8	45.3	68.0	39.1	58.8	33.2	49.9	98.8	149
	42	53.2	80.0	48.0	72.1	43.1	64.8	37.3	56.0	31.6	47.5	94.1	141
	44	50.8	76.4	45.8	68.9	41.1	61.8	35.6	53.5	30.2	45.3		
Beam Properties													
W_p/Ω_b	$\phi_b W_p$, kip-ft	2240	3360	2020	3030	1810	2720	1560	2350	1330	2000	3950	5940
M_p/Ω_b	$\phi_b M_p$, kip-ft	279	420	252	379	226	340	196	294	166	249	494	743
M_r/Ω_b	$\phi_b M_r$, kip-ft	172	258	155	233	138	207	119	180	101	151	306	459
BF/Ω_b	$\phi_b BF$, kips	9.15	13.8	8.76	13.2	9.63	14.6	8.94	13.2	8.14	12.3	7.86	11.9
V_n/Ω_v	$\phi_v V_n$, kips	141	212	128	192	130	195	113	169	106	159	199	298
Z_x, in.^{3}		112		101		90.7		78.4		66.5		198	
L_p, ft		5.90		5.83		4.56		4.49		4.31		8.87	
L_r, ft		17.6		16.9		13.7		13.1		12.3		32.8	

ASD	LRFD
Ω_b = 1.67	ϕ_b = 0.90
Ω_v = 1.50	ϕ_v = 1.00

Note: For beams laterally unsupported, see Table 3-10.
Available strength tabulated above heavy line is limited by available shear strength.

W16

Table 3-6 (continued)
Maximum Total Uniform Load, kips
W-Shapes

F_y = 50 ksi

Shape		W16×									
		89		77		67		57		50	
Design		ASD	LRFD	ASD	LRFD	ASD	LRFD	ASD	LRFD	ASD	LRFD
Span, ft	7							282	423	248	372
	8							262	394	230	345
	9	353	529	300	450			233	350	204	307
	10	349	525	299	450	258	386	210	315	184	276
	11	318	477	272	409	236	355	191	286	167	251
	12	291	438	250	375	216	325	175	263	153	230
	13	269	404	230	346	200	300	161	242	141	212
	14	250	375	214	321	185	279	150	225	131	197
	15	233	350	200	300	173	260	140	210	122	184
	16	218	328	187	281	162	244	131	197	115	173
	17	205	309	176	265	153	229	123	185	108	162
	18	194	292	166	250	144	217	116	175	102	153
	19	184	276	158	237	137	205	110	166	96.6	145
	20	175	263	150	225	130	195	105	158	91.8	138
	21	166	250	143	214	124	186	99.8	150	87.4	131
	22	159	239	136	205	118	177	95.3	143	83.5	125
	23	152	228	130	196	113	170	91.1	137	79.8	120
	24	146	219	125	188	108	163	87.3	131	76.5	115
	25	140	210	120	180	104	156	83.8	126	73.5	110
	26	134	202	115	173	99.8	150	80.6	121	70.6	106
	27	129	194	111	167	96.1	144	77.6	117	68.0	102
	28	125	188	107	161	92.7	139	74.9	113	65.6	98.6
	29	120	181	103	155	89.5	134	72.3	109	63.3	95.2
	30	116	175	99.8	150	86.5	130	69.9	105	61.2	92.0
	31	113	169	96.6	145	83.7	126	67.6	102	59.2	89.0
	32	109	164	93.6	141	81.1	122	65.5	98.4	57.4	86.3
	33	106	159	90.7	136	78.6	118	63.5	95.5	55.6	83.6
	34	103	154	88.1	132	76.3	115	61.6	92.6	54.0	81.2
	35	99.8	150	85.5	129	74.1	111	59.9	90.0	52.5	78.9
	36	97.0	146	83.2	125	72.1	108	58.2	87.5	51.0	76.7
	37	94.4	142	80.9	122	70.1	105	56.6	85.1	49.6	74.6
	38	91.9	138	78.8	118	68.3	103	55.2	82.9	48.3	72.6
	39	89.6	135	76.8	115	66.5	100	53.7	80.8	47.1	70.8
	40	87.3	131	74.9	113	64.9	97.5	52.4	78.8	45.9	69.0
	42	83.2	125								
Beam Properties											
W_c/Ω_b	$\phi_b W_c$, kip-ft	3490	5250	2990	4500	2590	3900	2100	3150	1840	2760
M_p/Ω_b	$\phi_b M_p$, kip-ft	437	656	374	563	324	488	262	394	230	345
M_r/Ω_b	$\phi_b M_r$, kip-ft	271	407	234	352	204	307	161	242	141	213
BF/Ω_b	$\phi_b BF$, kips	7.76	11.6	7.34	11.1	6.89	10.4	7.98	12.0	7.69	11.4
V_n/Ω_v	$\phi_v V_n$, kips	176	265	150	225	129	193	141	212	124	186
Z_x, in.^{3}		175		150		130		105		92.0	
L_p, ft		8.80		8.72		8.69		5.65		5.62	
L_r, ft		30.2		27.8		26.1		18.3		17.2	

ASD	LRFD
Ω_b = 1.67	ϕ_b = 0.90
Ω_v = 1.50	ϕ_v = 1.00

[a] Shape does not meet the h/t_w limit for shear in AISC *Specification* Section G2.1(a) with F_y = 50 ksi; therefore, ϕ_v = 0.90 and Ω_v = 1.67.

F_y = 50 ksi

Table 3-6 (continued)
Maximum Total Uniform Load, kips
W-Shapes

W16

Shape		W16×									
		45		40		36		31		26[v]	
Design		ASD	LRFD	ASD	LRFD	ASD	LRFD	ASD	LRFD	ASD	LRFD
Span, ft	6					188	281	175	262	141	212
	7	223	333	195	293	182	274	154	231	126	189
	8	205	309	182	274	160	240	135	203	110	166
	9	183	274	162	243	142	213	120	180	98.0	147
	10	164	247	146	219	128	192	108	162	88.2	133
	11	149	224	132	199	116	175	98.0	147	80.2	121
	12	137	206	121	183	106	160	89.8	135	73.5	111
	13	126	190	112	168	98.3	148	82.9	125	67.9	102
	14	117	176	104	156	91.2	137	77.0	116	63.0	94.7
	15	110	165	97.1	146	85.2	128	71.9	108	58.8	88.4
	16	103	154	91.1	137	79.8	120	67.4	101	55.1	82.9
	17	96.6	145	85.7	129	75.1	113	63.4	95.3	51.9	78.0
	18	91.3	137	80.9	122	71.0	107	59.9	90.0	49.0	73.7
	19	86.5	130	76.7	115	67.2	101	56.7	85.3	46.4	69.8
	20	82.1	123	72.9	110	63.9	96.0	53.9	81.0	44.1	66.3
	21	78.2	118	69.4	104	60.8	91.4	51.3	77.1	42.0	63.1
	22	74.7	112	66.2	99.5	58.1	87.3	49.0	73.6	40.1	60.3
	23	71.4	107	63.4	95.2	55.5	83.5	46.9	70.4	38.4	57.7
	24	68.4	103	60.7	91.3	53.2	80.0	44.9	67.5	36.8	55.3
	25	65.7	98.8	58.3	87.6	51.1	76.8	43.1	64.8	35.3	53.0
	26	63.2	95.0	56.0	84.2	49.1	73.8	41.5	62.3	33.9	51.0
	27	60.8	91.4	54.0	81.1	47.3	71.1	39.9	60.0	32.7	49.1
	28	58.7	88.2	52.0	78.2	45.6	68.6	38.5	57.9	31.5	47.4
	29	56.6	85.1	50.2	75.5	44.0	66.2	37.2	55.9	30.4	45.7
	30	54.8	82.3	48.6	73.0	42.6	64.0	35.9	54.0	29.4	44.2
	31	53.0	79.6	47.0	70.6	41.2	61.9	34.8	52.3	28.5	42.8
	32	51.3	77.2	45.5	68.4	39.9	60.0	33.7	50.6	27.6	41.4
	33	49.8	74.8	44.2	66.4	38.7	58.2	32.7	49.1	26.7	40.2
	34	48.3	72.6	42.9	64.4	37.6	56.5	31.7	47.6	25.9	39.0
	35	46.9	70.5	41.6	62.6	36.5	54.9	30.8	46.3	25.2	37.9
	36	45.6	68.6	40.5	60.8	35.5	53.3	29.9	45.0	24.5	36.8
	37	44.4	66.7	39.4	59.2	34.5	51.9	29.1	43.8	23.8	35.8
	38	43.2	65.0	38.3	57.6	33.6	50.5	28.4	42.6	23.2	34.9
	39	42.1	63.3	37.4	56.2	32.8	49.2	27.6	41.5	22.6	34.0
	40	41.1	61.7	36.4	54.8						
Beam Properties											
W_c/Ω_b	$\phi_b W_c$, kip-ft	1640	2470	1460	2190	1280	1920	1080	1620	882	1330
M_p/Ω_b	$\phi_b M_p$, kip-ft	205	309	182	274	160	240	135	203	110	166
M_r/Ω_b	$\phi_b M_r$, kip-ft	127	191	113	170	98.7	148	82.4	124	67.1	101
BF/Ω_b	$\phi_b BF$, kips	7.12	10.8	6.67	10.0	6.24	9.36	5.86	10.3	5.93	8.98
V_n/Ω_v	$\phi_v V_n$, kips	111	167	97.6	146	93.8	141	87.5	131	70.5	106
Z_x, in.^{3}		82.3		73.0		64.0		54.0		44.2	
L_p, ft		5.55		5.55		5.37		4.13		3.96	
L_r, ft		16.5		15.9		15.2		11.8		11.2	

ASD	LRFD
Ω_b = 1.67	ϕ_b = 0.90
Ω_v = 1.50	ϕ_v = 1.00

Note: For beams laterally unsupported, see Table 3-10.
Available strength tabulated above heavy line is limited by available shear strength.

W14

Table 3-6 (continued)
Maximum Total Uniform Load, kips
W-Shapes

F_y = 50 ksi

Shape		W14×											
		730[h]		665[h]		605[h]		550[h]		500[h]		455[h]	
Design		ASD	LRFD	ASD	LRFD	ASD	LRFD	ASD	LRFD	ASD	LRFD	ASD	LRFD
Span, ft	12	2750	4130	2450	3670	2170	3260	1920	2880	1720	2580	1540	2300
	13	2550	3830	2270	3420	2030	3050	1810	2720	1610	2420	1440	2160
	14	2370	3560	2110	3170	1880	2830	1680	2530	1500	2250	1330	2010
	15	2210	3320	1970	2960	1760	2640	1570	2360	1400	2100	1250	1870
	16	2070	3110	1850	2780	1650	2480	1470	2210	1310	1970	1170	1760
	17	1950	2930	1740	2610	1550	2330	1390	2080	1230	1850	1100	1650
	18	1840	2770	1640	2470	1460	2200	1310	1970	1160	1750	1040	1560
	19	1740	2620	1550	2340	1390	2080	1240	1860	1100	1660	983	1480
	20	1660	2490	1480	2220	1320	1980	1180	1770	1050	1580	934	1400
	21	1580	2370	1410	2110	1250	1890	1120	1690	998	1500	890	1340
	22	1510	2260	1340	2020	1200	1800	1070	1610	953	1430	849	1280
	23	1440	2170	1280	1930	1150	1720	1020	1540	911	1370	812	1220
	24	1380	2080	1230	1850	1100	1650	981	1480	873	1310	778	1170
	25	1330	1990	1180	1780	1050	1580	942	1420	838	1260	747	1120
	26	1270	1920	1140	1710	1010	1520	906	1360	806	1210	719	1080
	27	1230	1840	1090	1640	976	1470	872	1310	776	1170	692	1040
	28	1180	1780	1060	1590	941	1410	841	1260	749	1130	667	1000
	29	1140	1720	1020	1530	909	1370	812	1220	723	1090	644	968
	30	1100	1660	985	1480	878	1320	785	1180	699	1050	623	936
	31	1070	1610	953	1430	850	1280	760	1140	676	1020	603	906
	32	1040	1560	923	1390	823	1240	736	1110	655	984	584	878
	33	1000	1510	895	1350	798	1200	714	1070	635	955	566	851
	34	975	1460	869	1310	775	1160	693	1040	616	926	549	826
	35	947	1420	844	1270	753	1130	673	1010	599	900	534	802
	36	920	1380	821	1230	732	1100	654	983	582	875	519	780
	37	896	1350	798	1200	712	1070	637	957	566	851	505	759
	38	872	1310	777	1170	693	1040	620	932	552	829	492	739
	39	850	1280	757	1140	676	1020	604	908	537	808	479	720
	40	828	1250	739	1110	659	990	589	885	524	788	467	702
	42	789	1190	703	1060	627	943	561	843	499	750	445	669
	44	753	1130	671	1010	599	900	535	805	476	716	425	638
	46	720	1080	642	965	573	861	512	770	456	685	406	610
	48	690	1040	615	925	549	825	491	738	437	656		
	50	663	996	591	888	527	792	471	708				
	52	667	958	568	854	507	762						
	54	614	922	547	822								
	56	592	889										
Beam Properties													
W_b/Ω_b	$\phi_b W_b$, kip-ft	33100	49800	29500	44400	26300	39600	23600	35400	21000	31500	18700	28100
M_p/Ω_b	$\phi_b M_p$, kip-ft	4140	6230	3690	5550	3290	4950	2940	4430	2620	3940	2340	3510
M_r/Ω_b	$\phi_b M_r$, kip-ft	2240	3360	2010	3020	1820	2730	1630	2440	1460	2200	1320	1980
BF/Ω_b	$\phi_b BF$, kips	7.35	11.1	7.10	10.7	6.81	10.3	6.65	10.1	6.43	9.65	6.24	9.36
V_n/Ω_v	$\phi_v V_n$, kips	1380	2060	1220	1830	1090	1630	962	1450	858	1290	768	1150
Z_x, in.^{3}		1660		1480		1320		1180		1050		936	
L_p, ft		16.6		16.3		16.1		15.9		15.6		15.5	
L_r, ft		275		253		232		213		196		179	

ASD LRFD

$\Omega_b = 1.67$ $\phi_b = 0.90$

$\Omega_v = 1.50$ $\phi_v = 1.00$

[h] Flange thickness greater than 2 in. Special requirements may apply per AISC *Specification* Section A3.1c.

F_y = 50 ksi

Table 3-6 (continued)
Maximum Total Uniform Load, kips
W-Shapes

W14

Shape		W14×											
		426[h]		398[h]		370[h]		342[h]		311[h]		283[h]	
Design		ASD	LRFD	ASD	LRFD	ASD	LRFD	ASD	LRFD	ASD	LRFD	ASD	LRFD
Span, ft	12	1410	2110	1300	1940	1190	1780	1080	1620	964	1450	862	1290
	13	1330	2010	1230	1850	1130	1700	1030	1550	926	1390	832	1250
	14	1240	1860	1140	1720	1050	1580	958	1440	860	1290	773	1160
	15	1160	1740	1070	1600	979	1470	894	1340	802	1210	721	1080
	16	1080	1630	999	1500	918	1380	838	1260	752	1130	676	1020
	17	1020	1530	940	1410	864	1300	789	1190	708	1060	636	956
	18	964	1450	888	1340	816	1230	745	1120	669	1010	601	903
	19	913	1370	841	1260	773	1160	706	1060	633	952	569	856
	20	867	1300	799	1200	735	1100	671	1010	602	905	541	813
	21	826	1240	761	1140	700	1050	639	960	573	861	515	774
	22	788	1190	727	1090	668	1000	610	916	547	822	492	739
	23	754	1130	695	1040	639	960	583	877	523	787	470	707
	24	723	1090	666	1000	612	920	559	840	501	754	451	678
	25	694	1040	640	961	588	883	537	806	481	724	433	650
	26	667	1000	615	924	565	849	516	775	463	696	416	625
	27	642	966	592	890	544	818	497	747	446	670	401	602
	28	619	931	571	858	525	789	479	720	430	646	386	581
	29	598	899	551	829	507	761	463	695	415	624	373	561
	30	578	869	533	801	490	736	447	672	401	603	361	542
	31	560	841	516	775	474	712	433	650	388	584	349	525
	32	542	815	500	751	459	690	419	630	376	565	338	508
	33	526	790	484	728	445	669	406	611	365	548	328	493
	34	510	767	470	707	432	649	395	593	354	532	318	478
	35	496	745	457	687	420	631	383	576	344	517	309	465
	36	482	724	444	668	408	613	373	560	334	503	301	452
	37	469	705	432	649	397	597	363	545	325	489	292	439
	38	456	686	421	632	387	581	353	531	317	476	285	428
	39	445	668	410	616	377	566	344	517	309	464	277	417
	40	434	652	400	601	367	552	335	504	301	452	270	407
	42	413	621	381	572	350	526	319	480	287	431		
	44	394	593	363	546	334	502						
	46	377	567										
Beam Properties													
W_f/Ω_b	$\phi_b W_f$, kip-ft	17300	26100	16000	24000	14700	22100	13400	20200	12000	18100	10800	16300
M_p/Ω_b	$\phi_b M_p$, kip-ft	2170	3260	2000	3000	1840	2760	1680	2520	1500	2260	1350	2030
M_r/Ω_b	$\phi_b M_r$, kip-ft	1230	1850	1150	1720	1060	1590	975	1460	884	1330	802	1200
BF/Ω_b	$\phi_b BF$, kips	6.16	9.23	5.95	8.96	5.87	8.80	5.73	8.62	5.59	8.44	5.52	8.36
V_n/Ω_v	$\phi_v V_n$, kips	703	1050	648	972	594	891	539	809	482	723	431	646
Z_x, in.^{3}		869		801		736		672		603		542	
L_p, ft		15.3		15.2		15.1		15.0		14.8		14.7	
L_r, ft		168		156		148		138		125		114	

ASD	LRFD
Ω_b = 1.67	ϕ_b = 0.90
Ω_v = 1.50	ϕ_v = 1.00

Note: For beams laterally unsupported, see Table 3-10.
Available strength tabulated above heavy line is limited by available shear strength.

W14

Table 3-6 (continued)
Maximum Total Uniform Load, kips
W-Shapes

F_y = 50 ksi

Shape		W14×											
		257		233		211		193		176		159	
Design		ASD	LRFD	ASD	LRFD	ASD	LRFD	ASD	LRFD	ASD	LRFD	ASD	LRFD
Span, ft	12	774	1160	685	1030	615	923	552	828	505	757	447	671
	13	748	1120	669	1010	599	900	545	819	491	738	441	662
	14	694	1040	622	934	556	836	506	761	456	686	409	615
	15	648	974	580	872	519	780	472	710	426	640	382	574
	16	608	913	544	818	487	731	443	666	399	600	358	538
	17	572	859	512	769	458	688	417	626	376	565	337	506
	18	540	812	483	727	432	650	394	592	355	533	318	478
	19	512	769	458	688	410	616	373	561	336	505	302	453
	20	486	731	435	654	389	585	354	533	319	480	286	431
	21	463	696	414	623	371	557	337	507	304	457	273	410
	22	442	664	396	595	354	532	322	484	290	436	260	391
	23	423	635	378	569	338	509	308	463	278	417	249	374
	24	405	609	363	545	324	488	295	444	266	400	239	359
	25	389	584	348	523	311	468	283	426	255	384	229	344
	26	374	562	335	503	299	450	273	410	246	369	220	331
	27	360	541	322	484	288	433	262	394	237	356	212	319
	28	347	522	311	467	278	418	253	380	228	343	205	308
	29	335	504	300	451	268	403	244	367	220	331	198	297
	30	324	487	290	436	259	390	236	355	213	320	191	287
	31	314	471	281	422	251	377	229	344	206	310	185	278
	32	304	457	272	409	243	366	221	333	200	300	179	269
	33	295	443	264	396	236	355	215	323	194	291	174	261
	34	286	430	256	385	229	344	208	313	188	282	168	253
	35	278	417	249	374	222	334	202	304	182	274	164	246
	36	270	406	242	363	216	325	197	296	177	267	159	239
	37	263	395	235	354	210	316	192	288	173	259	155	233
	38	256	384	229	344	205	308	186	280	168	253		
	39	249	375	223	335	200	300						
	40	243	365	218	327								
Beam Properties													
W_c/Ω_b	$\phi_b W_c$, kip-ft	9720	14600	8700	13100	7780	11700	7090	10700	6390	9600	5730	8610
M_p/Ω_b	$\phi_b M_p$, kip-ft	1220	1830	1090	1640	973	1460	886	1330	798	1200	716	1080
M_r/Ω_b	$\phi_b M_r$, kip-ft	725	1090	655	984	590	887	541	814	491	738	444	667
BF/Ω_b	$\phi_b BF$, kips	5.54	8.28	5.40	8.15	5.30	7.94	5.30	7.93	5.20	7.83	5.17	7.85
V_n/Ω_v	$\phi_v V_n$, kips	387	581	342	514	308	462	276	414	252	378	224	335
Z_x, in.^{3}		487		436		390		355		320		287	
L_p, ft		14.6		14.5		14.4		14.3		14.2		14.1	
L_r, ft		104		95.0		86.6		79.4		73.2		66.7	

ASD	LRFD
Ω_b = 1.67	ϕ_b = 0.90
Ω_v = 1.50	ϕ_v = 1.00

† Shape does not meet compact limit for flexure with F_y = 50 ksi.

Table 3-6 (continued)
Maximum Total Uniform Load, kips
W-Shapes

F_y = 50 ksi

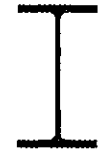

W14

Shape		W14×											
		145		132		120		109		99[f]		90[f]	
Design		ASD	LRFD	ASD	LRFD	ASD	LRFD	ASD	LRFD	ASD	LRFD	ASD	LRFD
Span, ft	12	403	604	379	569	342	513	300	450	275	413	246	370
	13	399	600	359	540	326	489	295	443	264	397	235	353
	14	371	557	334	501	302	454	274	411	246	369	218	328
	15	346	520	311	468	282	424	255	384	229	344	204	306
	16	324	488	292	439	264	398	240	360	215	323	191	287
	17	305	459	275	413	249	374	225	339	202	304	180	270
	18	288	433	259	390	235	353	213	320	191	287	170	255
	19	273	411	246	369	223	335	202	303	181	272	161	242
	20	259	390	234	351	212	318	192	288	172	258	153	230
	21	247	371	222	334	202	303	182	274	164	246	145	219
	22	236	355	212	319	192	289	174	262	156	235	139	209
	23	226	339	203	305	184	277	167	250	149	225	133	200
	24	216	325	195	293	176	265	160	240	143	215	127	191
	25	208	312	187	281	169	254	153	230	137	207	122	184
	26	200	300	180	270	163	245	147	222	132	199	117	177
	27	192	289	173	260	157	236	142	213	127	191	113	170
	28	185	279	167	251	151	227	137	206	123	185	109	164
	29	179	269	161	242	146	219	132	199	119	178	105	158
	30	173	260	156	234	141	212	128	192	115	172	102	153
	31	167	252	151	226	137	205	124	186	111	167	98.5	148
	32	162	244	146	219	132	199	120	180	107	161	95.4	143
	33	157	236	142	213	128	193	116	175	104	157	92.5	139
	34	153	229	137	206	124	187	113	169	101	152	89.8	135
	35	148	223	133	201	121	182	109	165	98.2	148	87.3	131
	36	144	217	130	195	118	177						
	37	140	211										
Beam Properties													
W_c/Ω_b	$\phi_b W_c$, kip-ft	5190	7800	4670	7020	4230	6360	3830	5760	3440	5170	3050	4590
M_p/Ω_b	$\phi_b M_p$, kip-ft	649	975	584	878	529	795	479	720	430	646	382	574
M_r/Ω_b	$\phi_b M_r$, kip-ft	405	609	365	549	332	499	302	454	274	412	250	375
BF/Ω_b	$\phi_b BF$, kips	5.13	7.69	5.15	7.74	5.09	7.65	5.01	7.54	4.91	7.36	4.82	7.26
V_n/Ω_v	$\phi_v V_n$, kips	201	302	190	284	171	257	150	225	138	207	123	185
Z_x, in.^{3}		260		234		212		192		173		157	
L_p, ft		14.1		13.3		13.2		13.2		13.5		15.1	
L_r, ft		61.7		55.8		51.9		48.5		45.3		42.5	

ASD	LRFD
Ω_b = 1.67	ϕ_b = 0.90
Ω_v = 1.50	ϕ_v = 1.00

Note: For beams laterally unsupported, see Table 3-10.
Available strength tabulated above heavy line is limited by available shear strength.

W14

Table 3-6 (continued)
Maximum Total Uniform Load, kips
W-Shapes

F_y = 50 ksi

Shape		W14×											
		82		74		68		61		53		48	
Design		ASD	LRFD	ASD	LRFD	ASD	LRFD	ASD	LRFD	ASD	LRFD	ASD	LRFD
Span, ft	8									206	309	188	282
	9	292	438	256	383	232	349	209	313	193	290	174	261
	10	277	417	251	378	230	345	204	306	174	261	156	235
	11	252	379	229	344	209	314	185	278	158	238	142	214
	12	231	348	210	315	191	288	170	255	145	218	130	196
	13	213	321	193	291	177	265	157	235	134	201	120	181
	14	198	298	180	270	164	246	145	219	124	187	112	168
	15	185	278	168	252	153	230	136	204	116	174	104	157
	16	173	261	157	236	143	216	127	191	109	163	97.8	147
	17	163	245	148	222	135	203	120	180	102	154	92.1	138
	18	154	232	140	210	128	192	113	170	96.6	145	86.9	131
	19	146	219	132	199	121	182	107	161	91.5	138	82.4	124
	20	139	209	126	189	115	173	102	153	86.9	131	78.2	118
	21	132	199	120	180	109	164	96.9	146	82.8	124	74.5	112
	22	126	190	114	172	104	157	92.5	139	79.0	119	71.1	107
	23	121	181	109	164	99.8	150	88.5	133	75.6	114	68.0	102
	24	116	174	105	158	95.6	144	84.8	128	72.4	109	65.2	98.0
	25	111	167	101	151	91.8	138	81.4	122	69.5	105	62.6	94.1
	26	107	160	96.7	145	88.3	133	78.3	118	66.9	101	60.2	90.5
	27	103	154	93.1	140	85.0	128	75.4	113	64.4	96.8	58.0	87.1
	28	99.1	149	89.8	135	82.0	123	72.7	109	62.1	93.3	55.9	84.0
	29	95.7	144	86.7	130	79.2	119	70.2	106	59.9	90.1	54.0	81.1
	30	92.5	139	83.8	126	76.5	115	67.9	102	58.0	87.1	52.2	78.4
	31	89.5	135	81.1	122	74.0	111	65.7	98.7	56.1	84.3	50.5	75.9
	32	86.7	130	78.6	118	71.7	108	63.6	95.6	54.3	81.7	48.9	73.5
	33	84.1	126	76.2	115	69.6	105	61.7	92.7	52.7	79.2	47.4	71.3
	34	81.6	123	74.0	111	67.5	101	59.9	90.0	51.1	76.9	46.0	69.2
	35	79.3	119	71.9	108	65.6	98.6						
Beam Properties													
W_c/Ω_b	$\phi_b W_c$, kip-ft	2770	4170	2510	3780	2300	3450	2040	3060	1740	2610	1560	2350
M_p/Ω_b	$\phi_b M_p$, kip-ft	347	521	314	473	287	431	254	383	217	327	196	294
M_r/Ω_b	$\phi_b M_r$, kip-ft	215	323	196	294	180	270	161	242	136	204	123	184
BF/Ω_b	$\phi_b BF$, kips	5.40	8.10	5.31	8.05	5.19	7.81	4.93	7.48	5.22	7.93	5.09	7.67
V_n/Ω_v	$\phi_v V_n$, kips	146	219	128	192	116	174	104	156	103	154	93.8	141
Z_x, in.^{3}		139		126		115		102		87.1		78.4	
L_p, ft		8.76		8.76		8.69		8.65		6.78		6.75	
L_r, ft		33.2		31.0		29.3		27.5		22.3		21.1	

ASD	LRFD
Ω_b = 1.67	ϕ_b = 0.90
Ω_v = 1.50	ϕ_v = 1.00

Table 3-6 (continued)
Maximum Total Uniform Load, kips
W-Shapes

F_y = 50 ksi

W14

Shape		W14×											
		43		38		34		30		26		22	
Design		ASD	LRFD	ASD	LRFD	ASD	LRFD	ASD	LRFD	ASD	LRFD	ASD	LRFD
Span, ft	5									142	213	126	189
	6					160	239	149	224	134	201	110	166
	7			175	262	156	234	135	203	115	172	94.7	142
	8	167	251	153	231	136	205	118	177	100	151	82.8	125
	9	154	232	136	205	121	182	105	158	89.2	134	73.6	111
	10	139	209	123	185	109	164	94.4	142	80.2	121	66.3	99.6
	11	126	190	112	168	99.1	149	85.8	129	72.9	110	60.2	90.5
	12	116	174	102	154	90.8	137	78.7	118	66.9	101	55.2	83.0
	13	107	161	94.4	142	83.8	126	72.6	109	61.7	92.8	51.0	76.6
	14	99.2	149	87.7	132	77.8	117	67.4	101	57.3	86.1	47.3	71.1
	15	92.6	139	81.8	123	72.7	109	62.9	94.6	53.5	80.4	44.2	66.4
	16	86.8	131	76.7	115	68.1	102	59.0	88.7	50.1	75.4	41.4	62.3
	17	81.7	123	72.2	109	64.1	96.4	55.5	83.5	47.2	70.9	39.0	58.6
	18	77.2	116	68.2	103	60.5	91.0	52.5	78.8	44.6	67.0	36.8	55.3
	19	73.1	110	64.6	97.1	57.4	86.2	49.7	74.7	42.2	63.5	34.9	52.4
	20	69.5	104	61.4	92.3	54.5	81.9	47.2	71.0	40.1	60.3	33.1	49.8
	21	66.2	99.4	58.5	87.9	51.9	78.0	45.0	67.6	38.2	57.4	31.6	47.4
	22	63.1	94.9	55.8	83.9	49.5	74.5	42.9	64.5	36.5	54.8	30.1	45.3
	23	60.4	90.8	53.4	80.2	47.4	71.2	41.0	61.7	34.9	52.4	28.8	43.3
	24	57.9	87.0	51.1	76.9	45.4	68.3	39.3	59.1	33.4	50.3	27.6	41.5
	25	55.6	83.5	49.1	73.8	43.6	65.5	37.8	56.8	32.1	48.2	26.5	39.8
	26	53.4	80.3	47.2	71.0	41.9	63.0	36.3	54.6	30.9	46.4	25.5	38.3
	27	51.5	77.3	45.5	68.3	40.4	60.7	35.0	52.6	29.7	44.7	24.5	36.9
	28	49.6	74.6	43.8	65.9	38.9	58.5	33.7	50.7	28.7	43.1	23.7	35.6
	29	47.9	72.0	42.3	63.6	37.6	56.5	32.6	48.9	27.7	41.6	22.9	34.3
	30	46.3	69.6	40.9	61.5	36.3	54.6	31.5	47.3	26.7	40.2	22.1	33.2
	31	44.8	67.4	39.6	59.5	35.2	52.8	30.5	45.8	25.9	38.9	21.4	32.1
	32	43.4	65.3	38.4	57.7	34.1	51.2	29.5	44.3	25.1	37.7	20.7	31.1
	33	42.1	63.3	37.2	55.9	33.0	49.6	28.6	43.0	24.3	36.5	20.1	30.2
	34	40.9	61.4	36.1	54.3	32.1	48.2	27.8	41.7	23.6	35.5	19.5	29.3
	35			35.1	52.7	31.1	46.8						
Beam Properties													
W_c/Ω_b	$\phi_b W_c$, kip-ft	1390	2090	1230	1850	1090	1640	944	1420	802	1210	663	996
M_p/Ω_b	$\phi_b M_p$, kip-ft	174	261	153	231	136	205	118	177	100	151	82.8	125
M_r/Ω_b	$\phi_b M_r$, kip-ft	109	164	95.4	143	84.9	128	73.4	110	61.7	92.7	50.6	76.1
BF/Ω_b	$\phi_b BF$, kips	4.88	7.28	5.37	8.20	5.01	7.55	4.63	6.95	5.33	8.11	4.78	7.27
V_n/Ω_v	$\phi_v V_n$, kips	83.6	125	87.4	131	79.8	120	74.5	112	70.9	106	63.0	94.5
Z_x, in.^{3}		69.6		61.5		54.6		47.3		40.2		33.2	
L_p, ft		6.68		5.47		5.40		5.26		3.81		3.67	
L_r, ft		20.0		16.2		15.6		14.9		11.0		10.4	

ASD	LRFD
Ω_b = 1.67	ϕ_b = 0.90
Ω_v = 1.50	ϕ_v = 1.00

Note: For beams laterally unsupported, see Table 3-10.
Available strength tabulated above heavy line is limited by available shear strength.

W12

Table 3-6 (continued)
Maximum Total Uniform Load, kips
W-Shapes

F_y = 50 ksi

Shape		W12×											
		336[h]		305[h]		279[h]		252[h]		230[h]		210	
Design		ASD	LRFD	ASD	LRFD	ASD	LRFD	ASD	LRFD	ASD	LRFD	ASD	LRFD
Span, ft	9					973	1460	862	1290	779	1170		
	10	1200	1790	1060	1590	960	1440	854	1280	770	1160	694	1040
	11	1090	1640	974	1460	873	1310	777	1170	700	1050	631	949
	12	1000	1510	893	1340	800	1200	712	1070	642	965	579	870
	13	926	1390	825	1240	739	1110	657	988	593	891	534	803
	14	860	1290	766	1150	686	1030	610	917	550	827	496	746
	15	802	1210	715	1070	640	962	570	856	514	772	463	696
	16	752	1130	670	1010	600	902	534	803	482	724	434	653
	17	708	1060	631	948	565	849	503	755	453	681	409	614
	18	669	1010	595	895	533	802	475	713	428	643	386	580
	19	633	952	564	848	505	759	450	676	406	609	366	549
	20	602	905	536	806	480	722	427	642	385	579	347	522
	21	573	861	510	767	457	687	407	611	367	551	331	497
	22	547	822	487	732	436	656	388	584	350	526	316	475
	23	523	787	466	700	417	627	371	558	335	503	302	454
	24	501	754	447	671	400	601	356	535	321	483	289	435
	25	481	724	429	644	384	577	342	514	308	463	278	418
	26	463	696	412	620	369	555	329	494	296	445	267	402
	27	446	670	397	597	356	534	316	476	285	429	257	387
	28	430	646	383	575	343	515	305	459	275	414	248	373
	29	415	624	370	556	331	498	295	443	266	399	240	360
	30	401	603	357	537	320	481	285	428	257	386	232	348
	31	388	584	346	520	310	465	276	414	249	374	224	337
	32	376	565	335	503	300	451	267	401	241	362	217	326
	33	365	548	325	488	291	437	259	389	233	351	210	316
	34	354	532	315	474	282	424	251	378	227	341	204	307
	35	344	517	306	460	274	412	244	367	220	331	198	298
	36	334	503	298	448	267	401	237	357	214	322	193	290
	37	325	489	290	435	259	390	231	347	208	313		
	38	317	476	282	424	253	380	225	338				
	39	309	464	275	413	246	370						
	40	301	452	268	403								
	41	294	441										
	42	287	431										
Beam Properties													
W_c/Ω_b	$\phi_b W_c$, kip-ft	12000	18100	10700	16100	9600	14400	8540	12800	7700	11600	6950	10400
M_p/Ω_b	$\phi_b M_p$, kip-ft	1500	2260	1340	2010	1200	1800	1070	1610	963	1450	868	1310
M_r/Ω_b	$\phi_b M_r$, kip-ft	844	1270	760	1140	686	1030	617	927	561	843	510	767
BF/Ω_b	$\phi_b BF$, kips	4.76	7.19	4.64	6.97	4.50	6.75	4.43	6.68	4.31	6.51	4.25	6.45
V_n/Ω_v	$\phi_v V_n$, kips	598	897	531	797	487	730	431	647	390	584	347	520
Z_x, in.^{3}		603		537		481		428		386		348	
L_p, ft		12.3		12.1		11.9		11.8		11.7		11.6	
L_r, ft		150		137		126		114		105		95.8	

ASD	LRFD
Ω_b = 1.67	ϕ_b = 0.90
Ω_v = 1.50	ϕ_v = 1.00

[h] Flange thickness greater than 2 in. Special requirements may apply per AISC *Specification* Section A3.1c.

Table 3-6 (continued)
Maximum Total Uniform Load, kips
W-Shapes

F_y = 50 ksi

W12

Shape		W12×											
		190		170		152		136		120		106	
Design		ASD	LRFD	ASD	LRFD	ASD	LRFD	ASD	LRFD	ASD	LRFD	ASD	LRFD
Span, ft	9									372	558		
	10	611	916	538	806	477	715	423	635	371	558	315	472
	11	564	848	499	750	441	663	388	584	338	507	298	447
	12	517	778	457	688	404	608	356	535	309	465	273	410
	13	478	718	422	635	373	561	329	494	286	429	252	378
	14	443	666	392	589	346	521	305	459	265	399	234	351
	15	414	622	366	550	323	486	285	428	248	372	218	328
	16	388	583	343	516	303	456	267	401	232	349	205	308
	17	365	549	323	485	285	429	251	378	218	328	193	289
	18	345	518	305	458	269	405	237	357	206	310	182	273
	19	327	491	289	434	255	384	225	338	195	294	172	259
	20	310	467	274	413	243	365	214	321	186	279	164	246
	21	296	444	261	393	231	347	203	306	177	266	156	234
	22	282	424	250	375	220	331	194	292	169	254	149	224
	23	270	406	239	359	211	317	186	279	161	243	142	214
	24	259	389	229	344	202	304	178	268	155	233	136	205
	25	248	373	220	330	194	292	171	257	149	223	131	197
	26	239	359	211	317	187	280	164	247	143	215	126	189
	27	230	346	203	306	180	270	158	238	138	207	121	182
	28	222	333	196	295	173	260	153	229	133	199	117	176
	29	214	322	189	284	167	251	147	221	128	192	113	170
	30	207	311	183	275	162	243	142	214	124	186	109	164
	31	200	301	177	266	156	235	138	207	120	180	106	159
	32	194	292	172	258	152	228	133	201	116	174	102	154
	33	188	283	166	250	147	221	129	195				
	34	183	274	161	243	143	214						
	35	177	267	157	236								
	36	172	259										
Beam Properties													
M_p/Ω_b	$\phi_b M_p$, kip-ft	6210	9330	5490	8250	4850	7290	4270	6420	3710	5580	3270	4920
M_n/Ω_b	$\phi_b M_n$, kip-ft	776	1170	686	1030	606	911	534	803	464	698	409	615
M_r/Ω_b	$\phi_b M_r$, kip-ft	459	690	410	617	365	549	325	488	285	428	253	381
BF/Ω_b	$\phi_b BF$, kips	4.18	6.33	4.11	6.15	4.06	6.10	4.02	6.06	3.94	5.95	3.93	5.89
V_n/Ω_v	$\phi_v V_n$, kips	305	458	269	403	239	358	212	318	186	279	157	236
Z_x, in.^{3}		311		275		243		214		186		164	
L_p, ft		11.5		11.4		11.3		11.2		11.1		11.0	
L_r, ft		87.3		78.5		70.6		63.2		56.5		50.7	

ASD	LRFD
Ω_b = 1.67	ϕ_b = 0.90
Ω_v = 1.50	ϕ_v = 1.00

Note: For beams laterally unsupported, see Table 3-10.
Available strength tabulated above heavy line is limited by available shear strength.

W12

Table 3-6 (continued)
Maximum Total Uniform Load, kips
W-Shapes

F_y = 50 ksi

Shape		W12×											
		96		87		79		72		65[f]		58	
Design		ASD	LRFD	ASD	LRFD	ASD	LRFD	ASD	LRFD	ASD	LRFD	ASD	LRFD
Span, ft	9											176	264
	10	279	419	258	386	233	350	212	317	189	283	172	259
	11	267	401	240	360	216	325	196	295	172	259	157	236
	12	245	368	220	330	198	298	180	270	158	237	144	216
	13	226	339	203	305	183	275	166	249	146	219	133	199
	14	210	315	188	283	170	255	154	231	135	204	123	185
	15	196	294	176	264	158	238	144	216	126	190	115	173
	16	183	276	165	248	148	223	135	203	118	178	108	162
	17	173	259	155	233	140	210	127	191	112	168	101	152
	18	163	245	146	220	132	198	120	180	105	158	95.8	144
	19	154	232	139	208	125	188	113	171	99.8	150	90.8	136
	20	147	221	132	198	119	179	108	162	94.8	142	86.2	130
	21	140	210	125	189	113	170	103	154	90.3	136	82.1	123
	22	133	200	120	180	108	162	98.0	147	86.2	130	78.4	118
	23	128	192	115	172	103	155	93.7	141	82.4	124	75.0	113
	24	122	184	110	165	99.0	149	89.8	135	79.0	119	71.9	108
	25	117	176	105	158	95.0	143	86.2	130	75.8	114	69.0	104
	26	113	170	101	152	91.4	137	82.9	125	72.9	110	66.3	99.7
	27	109	163	97.6	147	88.0	132	79.8	120	70.2	106	63.9	96.0
	28	105	158	94.1	141	84.8	128	77.0	116	67.7	102	61.6	92.6
	29	101	152	90.9	137	81.9	123	74.3	112	65.4	98.3	59.5	89.4
	30	97.8	147	87.8	132	79.2	119	71.9	108	63.2	95.0	57.5	86.4
	31	94.6	142	85.0	128	76.6	115						
Beam Properties													
W_p/Ω_b	$\phi_b W_c$, kip-ft	2930	4410	2630	3960	2380	3570	2160	3240	1900	2850	1720	2590
M_p/Ω_b	$\phi_b M_p$, kip-ft	367	551	329	495	297	446	269	405	237	356	216	324
M_r/Ω_b	$\phi_b M_r$, kip-ft	229	344	206	310	187	281	170	256	154	231	136	205
BF/Ω_b	$\phi_b BF$, kips	3.85	5.78	3.81	5.73	3.78	5.67	3.69	5.56	3.58	5.39	3.82	5.69
V_n/Ω_v	$\phi_v V_n$, kips	140	210	129	193	117	175	106	159	94.4	142	87.8	132
Z_x, in.^{3}		147		132		119		108		96.8		86.4	
L_p, ft		10.9		10.8		10.8		10.7		11.9		8.87	
L_r, ft		46.7		43.1		39.9		37.5		35.1		29.8	

ASD	LRFD
Ω_b = 1.67	ϕ_b = 0.90
Ω_v = 1.50	ϕ_v = 1.00

[f] Shape does not meet compact limit for flexure with F_y = 50 ksi.

F_y = 50 ksi

Table 3-6 (continued)
Maximum Total Uniform Load, kips
W-Shapes

W12

Shape		W12×											
		53		50		45		40		35		30	
Design		ASD	LRFD	ASD	LRFD	ASD	LRFD	ASD	LRFD	ASD	LRFD	ASD	LRFD
Span, ft	6									150	225	128	192
	7			181	271	162	243			146	219	123	185
	8			179	270	160	241	140	211	128	192	108	162
	9	167	250	159	240	142	214	126	190	114	171	95.6	144
	10	155	234	144	216	128	193	114	171	102	154	86.0	129
	11	141	212	130	196	116	175	103	155	92.9	140	78.2	118
	12	130	195	120	180	107	161	94.8	143	85.2	128	71.7	108
	13	120	180	110	166	98.6	148	87.5	132	78.6	118	66.2	99.5
	14	111	167	103	154	91.5	138	81.3	122	73.0	110	61.4	92.4
	15	104	156	95.7	144	85.4	128	75.8	114	68.1	102	57.4	86.2
	16	97.2	146	89.7	135	80.1	120	71.1	107	63.9	96.0	53.8	80.8
	17	91.5	137	84.4	127	75.4	113	66.9	101	60.1	90.4	50.6	76.1
	18	86.4	130	79.7	120	71.2	107	63.2	95.0	56.8	85.3	47.8	71.8
	19	81.8	123	75.5	114	67.4	101	59.9	90.0	53.8	80.8	45.3	68.1
	20	77.7	117	71.8	108	64.1	96.3	56.9	85.5	51.1	76.8	43.0	64.7
	21	74.0	111	68.3	103	61.0	91.7	54.2	81.4	48.7	73.1	41.0	61.6
	22	70.7	106	65.2	98.0	58.2	87.5	51.7	77.7	46.5	69.8	39.1	58.8
	23	67.6	102	62.4	93.8	55.7	83.7	49.5	74.3	44.4	66.8	37.4	56.2
	24	64.8	97.4	59.8	89.9	53.4	80.3	47.4	71.3	42.6	64.0	35.8	53.9
	25	62.2	93.5	57.4	86.3	51.3	77.0	45.5	68.4	40.9	61.4	34.4	51.7
	26	59.8	89.9	55.2	83.0	49.3	74.1	43.8	65.8	39.3	59.1	33.1	49.7
	27	57.6	86.6	53.2	79.9	47.5	71.3	42.1	63.3	37.9	56.9	31.9	47.9
	28	55.5	83.5	51.3	77.0	45.8	68.8	40.6	61.1	36.5	54.9	30.7	46.2
	29	53.6	80.6	49.5	74.4	44.2	66.4	39.2	59.0	35.2	53.0	29.7	44.6
	30	51.8	77.9	47.8	71.9	42.7	64.2			34.1	51.2	28.7	43.1
	31									33.0	49.5		
Beam Properties													
M_c/Ω_b	$\phi_b M_c$, kip-ft	1550	2340	1440	2160	1280	1930	1140	1710	1020	1540	860	1290
M_p/Ω_b	$\phi_b M_p$, kip-ft	194	292	179	270	160	241	142	214	128	192	108	162
M_r/Ω_b	$\phi_b M_r$, kip-ft	123	185	112	169	101	151	89.9	135	79.6	120	67.4	101
BF/Ω_b	$\phi_b BF$, kips	3.65	5.50	3.97	5.98	3.80	5.80	3.66	5.54	4.34	6.45	3.97	5.96
V_n/Ω_v	$\phi_v V_n$, kips	83.5	125	90.3	135	81.1	122	70.2	105	75.6	113	64.0	95.9
Z_x, in.^{3}		77.9		71.9		64.2		57.0		51.2		43.1	
L_p, ft		8.76		6.92		6.89		6.85		5.44		5.37	
L_r, ft		28.2		23.8		22.4		21.1		16.6		15.6	

ASD	LRFD
Ω_b = 1.67	ϕ_b = 0.90
Ω_v = 1.50	ϕ_v = 1.00

Note: For beams laterally unsupported, see Table 3-10.
Available strength tabulated above heavy line is limited by available shear strength.

W12

Table 3-6 (continued)
Maximum Total Uniform Load, kips
W-Shapes

F_y = 50 ksi

Shape		W12×										W10×	
		26		22		19		16		14[v]		112	
Design		ASD	LRFD	ASD	LRFD	ASD	LRFD	ASD	LRFD	ASD	LRFD	ASD	LRFD
Span, ft	3							106	158				
	4			128	192	115	172	100	151	85.5	129		
	5			117	176	98.6	148	80.2	121	69.5	104		
	6	112	168	97.5	147	82.2	124	66.9	101	57.9	87.0		
	7	106	159	83.5	126	70.4	106	57.3	86.1	49.6	74.6		
	8	92.8	140	73.1	110	61.6	92.6	50.1	75.4	43.4	65.3	344	516
	9	82.5	124	65.0	97.7	54.8	82.3	44.6	67.0	38.6	58.0	326	490
	10	74.3	112	58.5	87.9	49.3	74.1	40.1	60.3	34.7	52.2	293	441
	11	67.5	101	53.2	79.9	44.8	67.4	36.5	54.8	31.6	47.5	267	401
	12	61.9	93.0	48.7	73.3	41.1	61.8	33.4	50.3	28.9	43.5	245	368
	13	57.1	85.8	45.0	67.6	37.9	57.0	30.9	46.4	26.7	40.2	226	339
	14	53.0	79.7	41.8	62.8	35.2	52.9	28.7	43.1	24.8	37.3	210	315
	15	49.5	74.4	39.0	58.6	32.9	49.4	26.7	40.2	23.2	34.8	196	294
	16	46.4	69.8	36.6	54.9	30.8	46.3	25.1	37.7	21.7	32.6	183	276
	17	43.7	65.6	34.4	51.7	29.0	43.6	23.6	35.5	20.4	30.7	173	259
	18	41.3	62.0	32.5	48.8	27.4	41.2	22.3	33.5	19.3	29.0	163	245
	19	39.1	58.7	30.8	46.3	25.9	39.0	21.1	31.7	18.3	27.5	154	232
	20	37.1	55.8	29.2	44.0	24.7	37.1	20.1	30.2	17.4	26.1	147	221
	21	35.4	53.1	27.8	41.9	23.5	35.3	19.1	28.7	16.5	24.9	140	210
	22	33.8	50.7	26.6	40.0	22.4	33.7	18.2	27.4	15.8	23.7	133	200
	23	32.3	48.5	25.4	38.2	21.4	32.2	17.4	26.2	15.1	22.7	128	192
	24	30.9	46.5	24.4	36.6	20.5	30.9	16.7	25.1	14.5	21.8	122	184
	25	29.7	44.6	23.4	35.2	19.7	29.6	16.0	24.1	13.9	20.9	117	176
	26	28.6	42.9	22.5	33.8	19.0	28.5	15.4	23.2	13.4	20.1	113	170
	27	27.5	41.3	21.7	32.6	18.3	27.4	14.9	22.3	12.9	19.3	109	163
	28	26.5	39.9	20.9	31.4	17.6	26.5	14.3	21.5	12.4	18.6	105	158
	29	25.6	38.5	20.2	30.3	17.0	25.6	13.8	20.8	12.0	18.0		
	30	24.8	37.2	19.5	29.3	16.4	24.7	13.4	20.1				
Beam Properties													
M_c/Ω_b	$\phi_b M_c$, kip-ft	743	1120	585	879	493	741	401	603	347	522	2930	4410
M_p/Ω_b	$\phi_b M_p$, kip-ft	92.8	140	73.1	110	61.6	92.6	50.1	75.4	43.4	65.3	367	551
M_r/Ω_b	$\phi_b M_r$, kip-ft	58.3	87.7	44.4	66.7	37.2	55.9	29.9	44.9	26.0	39.1	220	331
BF/Ω_b	$\phi_b BF$, kips	3.61	5.46	4.68	7.06	4.27	6.43	3.80	5.73	3.43	5.17	2.69	4.03
V_n/Ω_v	$\phi_v V_n$, kips	56.1	84.2	64.0	95.9	57.3	86.0	52.8	79.2	42.8	64.3	172	258
Z_x, in.^{3}		37.2		29.3		24.7		20.1		17.4		147	
L_p, ft		5.33		3.00		2.90		2.73		2.66		9.47	
L_r, ft		14.9		9.13		8.61		8.05		7.73		64.1	

ASD	LRFD
Ω_b = 1.67	ϕ_b = 0.90
Ω_v = 1.50	ϕ_v = 1.00

[v] Shape does not meet the h/t_w limit for shear in AISC *Specification* Section G2.1(a) with F_y = 50 ksi; therefore, ϕ_v = 0.90 and Ω_v = 1.67.

F_y = 50 ksi

Table 3-6 (continued)
Maximum Total Uniform Load, kips
W-Shapes

Shape		W10×											
		100		88		77		68		60		54	
Design		ASD	LRFD	ASD	LRFD	ASD	LRFD	ASD	LRFD	ASD	LRFD	ASD	LRFD
Span, ft	8	302	453	261	392	225	337	196	293	171	257	149	224
	9	288	433	251	377	216	325	189	284	165	249	148	222
	10	259	390	226	339	195	293	170	256	149	224	133	200
	11	236	355	205	308	177	266	155	233	135	203	121	182
	12	216	325	188	283	162	244	142	213	124	187	111	167
	13	200	300	173	261	150	225	131	197	115	172	102	154
	14	185	279	161	242	139	209	122	183	106	160	95.0	143
	15	173	260	150	226	130	195	114	171	99.3	149	88.6	133
	16	162	244	141	212	122	183	106	160	93.1	140	83.1	125
	17	153	229	133	199	115	172	100	151	87.6	132	78.2	118
	18	144	217	125	188	108	163	94.6	142	82.7	124	73.9	111
	19	137	205	119	178	103	154	89.6	135	78.4	118	70.0	105
	20	130	195	113	170	97.4	146	85.1	128	74.5	112	66.5	99.9
	21	124	186	107	161	92.8	139	81.1	122	70.9	107	63.3	95.1
	22	118	177	103	154	88.6	133	77.4	116	67.7	102	60.4	90.8
	23	113	170	98.1	147	84.7	127	74.0	111	64.7	97.3	57.8	86.9
	24	108	163	94.0	141	81.2	122	70.9	107	62.0	93.3	55.4	83.3
	25	104	156	90.2	136	77.9	117	68.1	102	59.6	89.5	53.2	79.9
	26	99.8	150	86.7	130	74.9	113	65.5	98.4				
	27	96.1	144	83.5	126								
Beam Properties													
W_c/Ω_b	$\phi_b W_c$, kip-ft	2590	3900	2260	3390	1950	2930	1700	2560	1490	2240	1330	2000
M_p/Ω_b	$\phi_b M_p$, kip-ft	324	488	282	424	244	366	213	320	186	280	166	250
M_r/Ω_b	$\phi_b M_r$, kip-ft	196	294	172	259	150	225	132	199	116	175	105	158
BF/Ω_b	$\phi_b BF$, kips	2.64	4.00	2.62	3.94	2.60	3.90	2.58	3.85	2.54	3.82	2.48	3.75
V_n/Ω_v	$\phi_v V_n$, kips	151	226	131	196	112	169	97.8	147	85.7	129	74.7	112
Z_x, in.^{3}		130		113		97.6		85.3		74.6		66.6	
L_p, ft		9.36		9.29		9.18		9.15		9.08		9.04	
L_r, ft		57.9		51.2		45.3		40.6		36.6		33.6	

ASD	LRFD
Ω_b = 1.67	ϕ_b = 0.90
Ω_v = 1.50	ϕ_v = 1.00

Note: For beams laterally unsupported, see Table 3-10.
Available strength tabulated above heavy line is limited by available shear strength.

W10

Table 3-6 (continued)
Maximum Total Uniform Load, kips
W-Shapes

F_y = 50 ksi

Shape		W10×											
		49		45		39		33		30		26	
Design		ASD	LRFD	ASD	LRFD	ASD	LRFD	ASD	LRFD	ASD	LRFD	ASD	LRFD
Span, ft	5									126	189	107	161
	6							113	169	122	183	104	157
	7			141	212	125	187	111	166	104	157	89.3	134
	8	136	204	137	206	117	176	96.8	146	91.3	137	78.1	117
	9	134	201	122	183	104	156	86.1	129	81.2	122	69.4	104
	10	121	181	110	165	93.4	140	77.4	116	73.1	110	62.5	93.9
	11	110	165	99.6	150	84.9	128	70.4	106	66.4	99.8	56.8	85.4
	12	100	151	91.3	137	77.8	117	64.5	97.0	60.9	91.5	52.1	78.3
	13	92.7	139	84.3	127	71.9	108	59.6	89.5	56.2	84.5	48.1	72.2
	14	86.1	129	78.3	118	66.7	100	55.3	83.1	52.2	78.4	44.6	67.1
	15	80.4	121	73.1	110	62.3	93.6	51.6	77.6	48.7	73.2	41.7	62.6
	16	75.3	113	68.5	103	58.4	87.8	48.4	72.8	45.7	68.6	39.0	58.7
	17	70.9	107	64.5	96.9	54.9	82.6	45.6	68.5	43.0	64.6	36.8	55.2
	18	67.0	101	60.9	91.5	51.9	78.0	43.0	64.7	40.6	61.0	34.7	52.2
	19	63.5	95.4	57.7	86.7	49.2	73.9	40.8	61.3	38.4	57.8	32.9	49.4
	20	60.3	90.6	54.8	82.4	46.7	70.2	38.7	58.2	36.5	54.9	31.2	47.0
	21	57.4	86.3	52.2	78.4	44.5	66.9	36.9	55.4	34.8	52.3	29.8	44.7
	22	54.8	82.4	49.8	74.9	42.5	63.8	35.2	52.9	33.2	49.9	28.4	42.7
	23	52.4	78.8	47.6	71.6	40.6	61.0	33.7	50.6	31.8	47.7	27.2	40.8
	24	50.2	75.5	45.7	68.6	38.9	58.5	32.3	48.5	30.4	45.8	26.0	39.1
	25	48.2	72.5	43.8	65.9					29.2	43.9	25.0	37.6
	26									28.1	42.2		
Beam Properties													
W_c/Ω_b	$\phi_b W_c$, kip-ft	1210	1810	1100	1650	934	1400	774	1160	731	1100	625	939
M_p/Ω_b	$\phi_b M_p$, kip-ft	151	227	137	206	117	176	96.8	146	91.3	137	78.1	117
M_r/Ω_b	$\phi_b M_r$, kip-ft	95.4	143	85.8	129	73.5	111	61.1	91.9	56.6	85.1	48.7	73.2
BF/Ω_b	$\phi_b BF$, kips	2.46	3.71	2.59	3.89	2.53	3.78	2.39	3.62	3.08	4.61	2.91	4.34
V_n/Ω_v	$\phi_v V_n$, kips	68.0	102	70.7	106	62.5	93.7	56.4	84.7	63.0	94.5	53.6	80.3
Z_x, in.^{3}		60.4		54.9		46.8		38.8		36.6		31.3	
L_p, ft		8.97		7.10		6.99		6.85		4.84		4.80	
L_r, ft		31.6		26.9		24.2		21.8		16.1		14.9	

ASD	LRFD
Ω_b = 1.67	ϕ_b = 0.90
Ω_v = 1.50	ϕ_v = 1.00

[1] Shape does not meet compact limit for flexure with F_y = 50 ksi.

F_y = 50 ksi

Table 3-6 (continued)
Maximum Total Uniform Load, kips
W-Shapes

W10-W8

Shape		W10×										W8×	
		22		19		17		15		12[f]		67	
Design		ASD	LRFD	ASD	LRFD	ASD	LRFD	ASD	LRFD	ASD	LRFD	ASD	LRFD
Span, ft	3					97.0	145	91.9	138	75.0	113		
	4			102	153	93.3	140	79.8	120	62.4	93.8		
	5	97.9	147	86.2	130	74.7	112	63.9	96.0	49.9	75.0		
	6	86.5	130	71.9	108	62.2	93.5	53.2	80.0	41.6	62.5	205	308
	7	74.1	111	61.6	92.6	53.3	80.1	45.6	68.6	35.7	53.6	200	300
	8	64.9	97.5	53.9	81.0	46.7	70.1	39.9	60.0	31.2	46.9	175	263
	9	57.7	86.7	47.9	72.0	41.5	62.3	35.5	53.3	27.7	41.7	155	234
	10	51.9	78.0	43.1	64.8	37.3	56.1	31.9	48.0	25.0	37.5	140	210
	11	47.2	70.9	39.2	58.9	33.9	51.0	29.0	43.6	22.7	34.1	127	191
	12	43.2	65.0	35.9	54.0	31.1	46.8	26.6	40.0	20.8	31.3	117	175
	13	39.9	60.0	33.2	49.8	28.7	43.2	24.6	36.9	19.2	28.9	108	162
	14	37.1	55.7	30.8	46.3	26.7	40.1	22.8	34.3	17.8	26.8	99.9	150
	15	34.6	52.0	28.7	43.2	24.9	37.4	21.3	32.0	16.6	25.0	93.3	140
	16	32.4	48.8	26.9	40.5	23.3	35.1	20.0	30.0	15.6	23.5	87.5	131
	17	30.5	45.9	25.4	38.1	22.0	33.0	18.8	28.2	14.7	22.1	82.3	124
	18	28.8	43.3	24.0	36.0	20.7	31.2	17.7	26.7	13.9	20.8	77.7	117
	19	27.3	41.1	22.7	34.1	19.6	29.5	16.8	25.3	13.1	19.7	73.6	111
	20	25.9	39.0	21.6	32.4	18.7	28.1	16.0	24.0	12.5	18.8	70.0	105
	21	24.7	37.1	20.5	30.9	17.8	26.7	15.2	22.9	11.9	17.9	66.6	100
	22	23.6	35.5	19.6	29.5	17.0	25.5	14.5	21.8	11.3	17.1	63.6	95.6
	23	22.6	33.9	18.7	28.2	16.2	24.4	13.9	20.9	10.9	16.3		
	24	21.6	32.5	18.0	27.0	15.6	23.4	13.3	20.0	10.4	15.6		
	25	20.8	31.2	17.2	25.9	14.9	22.4						
Beam Properties													
W_c/Ω_b	$\phi_b W_c$, kip-ft	519	780	431	648	373	561	319	480	250	375	1400	2100
M_p/Ω_b	$\phi_b M_p$, kip-ft	64.9	97.5	53.9	81.0	46.7	70.1	39.9	60.0	31.2	46.9	175	263
M_r/Ω_b	$\phi_b M_r$, kip-ft	40.5	60.9	32.8	49.4	28.3	42.5	24.1	36.2	19.0	28.6	105	159
BF/Ω_b	$\phi_b BF$, kips	2.68	4.02	3.18	4.76	2.98	4.47	2.75	4.14	2.36	3.53	1.75	2.59
V_n/Ω_v	$\phi_v V_n$, kips	49.0	73.4	51.0	76.5	48.9	72.7	46.0	68.9	37.5	56.3	103	154
Z_x, in.^{3}		26.0		21.6		18.7		16.0		12.6		70.1	
L_p, ft		4.70		3.09		2.98		2.86		2.87		7.49	
L_r, ft		13.8		9.73		9.16		8.61		8.05		47.6	

ASD	LRFD
Ω_b = 1.67	ϕ_b = 0.90
Ω_v = 1.50	ϕ_v = 1.00

Note: For beams laterally unsupported, see Table 3-10.
Available strength tabulated above heavy line is limited by available shear strength.

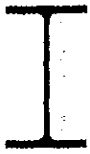

W8

Table 3-6 (continued)
Maximum Total Uniform Load, kips
W-Shapes

F_y = 50 ksi

Shape		W8×											
		58		48		40		35		31[f]		28	
Design		ASD	LRFD	ASD	LRFD	ASD	LRFD	ASD	LRFD	ASD	LRFD	ASD	LRFD
Span, ft	5											91.9	138
	6	179	268			119	178	101	151.0	91.2	137	90.5	136
	7	171	256	136	204	113	171	98.9	149	86.6	130	77.6	117
	8	149	224	122	184	99.3	149	86.6	130	75.8	114	67.9	102
	9	133	199	109	163	88.3	133	77.0	116	67.4	101	60.3	90.7
	10	119	179	97.8	147	79.4	119	69.3	104	60.6	91.1	54.3	81.6
	11	109	163	88.9	134	72.2	109	63.0	94.6	55.1	82.8	49.4	74.2
	12	99.5	150	81.5	123	66.2	99.5	57.7	86.8	50.5	75.9	45.2	68.0
	13	91.8	138	75.2	113	61.1	91.8	53.3	80.1	46.6	70.1	41.8	62.8
	14	85.3	128	69.9	105	56.7	85.3	49.5	74.4	43.3	65.1	38.8	58.3
	15	79.6	120	65.2	98.0	53.0	79.6	46.2	69.4	40.4	60.7	36.2	54.4
	16	74.6	112	61.1	91.9	49.7	74.6	43.3	65.1	37.9	56.9	33.9	51.0
	17	70.2	106	57.5	86.5	46.7	70.2	40.7	61.2	35.7	53.6	31.9	48.0
	18	66.3	99.7	54.3	81.7	44.1	66.3	38.5	57.8	33.7	50.6	30.2	45.3
	19	62.8	94.4	51.5	77.4	41.8	62.8	36.5	54.8	31.9	48.0	28.6	42.9
	20	59.7	89.7	48.9	73.5	39.7	59.7	34.6	52.1	30.3	45.6	27.1	40.8
	21	56.8	85.4	46.6	70.0								
Beam Properties													
W_c/Ω_b	$\phi_b W_c$, kip-ft	1190	1790	978	1470	794	1190	693	1040	606	911	543	816
M_p/Ω_b	$\phi_b M_p$, kip-ft	149	224	122	184	99.3	149	86.6	130	75.8	114	67.9	102
M_r/Ω_b	$\phi_b M_r$, kip-ft	90.8	137	75.4	113	62.0	93.2	54.5	81.9	48.0	72.2	42.4	63.8
BF/Ω_b	$\phi_b BF$, kips	1.70	2.55	1.67	2.55	1.64	2.46	1.62	2.43	1.58	2.37	1.67	2.50
V_n/Ω_v	$\phi_v V_n$, kips	89.3	134	68.0	102	59.4	89.1	50.3	75.5	45.6	68.4	45.9	68.9
Z_x, in.^{3}		59.8		49.0		39.8		34.7		30.4		27.2	
L_p, ft		7.42		7.35		7.21		7.17		7.18		5.72	
L_r, ft		41.6		35.2		29.9		27.0		24.8		21.0	

ASD	LRFD
Ω_b = 1.67	ϕ_b = 0.90
Ω_v = 1.50	ϕ_v = 1.00

[f] Shape does not meet compact limit for flexure with F_y = 50 ksi.

Table 3-6 (continued)
Maximum Total Uniform Load, kips
W-Shapes

F_y = 50 ksi

Shape		W8×											
		24		21		18		15		13		10[f]	
Design		ASD	LRFD	ASD	LRFD	ASD	LRFD	ASD	LRFD	ASD	LRFD	ASD	LRFD
Span, ft	3							79.5	119	73.5	110	53.7	80.5
	4			82.8	124	74.9	112	67.9	102	56.9	85.5	43.7	65.7
	5	77.7	117	81.4	122	67.9	102	54.3	81.6	45.5	68.4	35.0	52.6
	6	76.8	115	67.9	102	56.6	85.0	45.2	68.0	37.9	57.0	29.2	43.8
	7	65.9	99.0	58.2	87.4	48.5	72.9	38.8	58.3	32.5	48.9	25.0	37.6
	8	57.6	86.6	50.9	76.5	42.4	63.8	33.9	51.0	28.4	42.8	21.9	32.9
	9	51.2	77.0	45.2	68.0	37.7	56.7	30.2	45.3	25.3	38.0	19.4	29.2
	10	46.1	69.3	40.7	61.2	33.9	51.0	27.1	40.8	22.8	34.2	17.5	26.3
	11	41.9	63.0	37.0	55.6	30.8	46.4	24.7	37.1	20.7	31.1	15.9	23.9
	12	38.4	57.8	33.9	51.0	28.3	42.5	22.6	34.0	19.0	28.5	14.6	21.9
	13	35.5	53.3	31.3	47.1	26.1	39.2	20.9	31.4	17.5	26.3	13.5	20.2
	14	32.9	49.5	29.1	43.7	24.2	36.4	19.4	29.1	16.3	24.4	12.5	18.8
	15	30.7	46.2	27.1	40.8	22.6	34.0	18.1	27.2	15.2	22.8	11.7	17.5
	16	28.8	43.3	25.4	38.3	21.2	31.9	17.0	25.5	14.2	21.4	10.9	16.4
	17	27.1	40.8	24.0	36.0	20.0	30.0	16.0	24.0	13.4	20.1	10.3	15.5
	18	25.6	38.5	22.6	34.0	18.9	28.3	15.1	22.7	12.6	19.0	9.72	14.6
	19	24.3	36.5	21.4	32.2	17.9	26.8	14.3	21.5	12.0	18.0	9.21	13.8
	20			20.4	30.6	17.0	25.5	13.6	20.4				
Beam Properties													
W_c/Ω_b	$\phi_b W_c$, kip-ft	461	693	407	612	339	510	271	408	228	342	175	263
M_p/Ω_b	$\phi_b M_p$, kip-ft	57.6	86.6	50.9	76.5	42.4	63.8	33.9	51.0	28.4	42.8	21.9	32.9
M_n/Ω_b	$\phi_b M_n$, kip-ft	36.5	54.9	31.8	47.8	26.5	39.9	20.6	31.0	17.3	26.0	13.6	20.5
BF/Ω_b	$\phi_b BF$, kips	1.60	2.40	1.85	2.77	1.74	2.61	1.90	2.85	1.76	2.67	1.54	2.30
V_n/Ω_v	$\phi_v V_n$, kips	38.9	58.3	41.4	62.1	37.4	56.2	39.7	59.6	36.8	55.1	26.8	40.2
Z_x, in.^{3}		23.1		20.4		17.0		13.6		11.4		8.87	
L_p, ft		5.69		4.45		4.34		3.09		2.98		3.14	
L_r, ft		18.9		14.8		13.5		10.1		9.27		8.52	

ASD	LRFD
Ω_b = 1.67	ϕ_b = 0.90
Ω_v = 1.50	ϕ_v = 1.00

Note: For beams laterally unsupported, see Table 3-10.
Available strength tabulated above heavy line is limited by available shear strength.

S24-S20

Table 3-7
Maximum Total Uniform Load, kips
S-Shapes

F_y = 36 ksi

Shape		S24×										S20×	
		121		106		100		90		80		96	
Design		ASD	LRFD	ASD	LRFD	ASD	LRFD	ASD	LRFD	ASD	LRFD	ASD	LRFD
Span, ft	6					515	772					468	702
	7	564	847			491	737	432	648			407	611
	8	550	826			429	645	399	599	346	518	356	535
	9	489	734	437	656	382	574	354	533	326	490	316	475
	10	440	661	401	603	343	516	319	480	293	441	285	428
	11	400	601	365	548	312	469	290	436	267	401	259	389
	12	366	551	334	502	286	430	266	400	244	367	237	356
	13	338	508	308	464	264	397	245	369	226	339	219	329
	14	314	472	286	430	245	369	228	343	209	315	203	305
	15	293	441	267	402	229	344	213	320	195	294	190	285
	16	275	413	251	377	215	323	199	300	183	275	178	267
	17	259	389	236	354	202	304	188	282	172	259	167	252
	18	244	367	223	335	191	287	177	266	163	245	158	238
	19	231	348	211	317	181	272	168	252	154	232	150	225
	20	220	330	200	301	172	258	160	240	147	220	142	214
	21	209	315	191	287	164	246	152	228	140	210	136	204
	22	200	300	182	274	156	235	145	218	133	200	129	194
	23	191	287	174	262	149	224	139	208	127	192	124	186
	24	183	275	167	251	143	215	133	200	122	184	119	178
	25	176	264	160	241	137	206	128	192	117	176	114	171
	26	169	254	154	232	132	199	123	184	113	169	109	164
	27	163	245	149	223	127	191	118	178	109	163	105	158
	28	157	236	143	215	123	184	114	171	105	157	102	153
	29	152	228	138	208	118	178	110	165	101	152	98.1	147
	30	147	220	134	201	114	172	106	160	97.7	147	94.9	143
	32	137	207	125	188	107	161	99.7	150	91.6	138	88.9	134
	34	129	194	118	177	101	152	93.8	141	86.2	130	83.7	126
	36	122	184	111	167	95.4	143	88.6	133	81.4	122	79.0	119
	38	116	174	106	159	90.4	136	84.0	126	77.2	116	74.9	113
	40	110	165	100	151	85.9	129	79.8	120	73.3	110	71.1	107
	42	105	157	95.5	143	81.8	123	76.0	114	69.8	105	67.8	102
	44	99.9	150	91.1	137	78.1	117	72.5	109	66.6	100	64.7	97.2
	46	95.6	144	87.2	131	74.7	112	69.4	104	63.7	95.8	61.9	93.0
	48	91.6	138	83.5	126	71.6	108	66.5	99.9	61.1	91.8	59.3	89.1
	50	88.0	132	80.2	121	68.7	103	63.8	95.9	58.6	88.1	56.9	85.5
	52	84.6	127	77.1	116	66.1	99.3	61.4	92.2	56.4	84.7		
	54	81.4	122	74.3	112	63.6	95.6	59.1	88.8	54.3	81.6		
	56	78.5	118	71.6	108	61.3	92.2	57.0	85.6	52.4	78.7		
	58	75.8	114	69.1	104	59.2	89.0	55.0	82.7	50.5	76.0		
	60	73.3	110	66.8	100	57.2	86.0	53.2	79.9	48.9	73.4		
Beam Properties													
W_c/Ω_b	$\phi_b W_c$, kip-ft	4400	6610	4010	6030	3430	5160	3190	4800	2930	4410	2850	4280
M_p/Ω_b	$\phi_b M_p$, kip-ft	550	826	501	753	429	645	399	599	366	551	356	535
M_r/Ω_b	$\phi_b M_r$, kip-ft	324	488	302	454	250	376	235	353	220	331	207	312
BF/Ω_b	$\phi_b BF$, kips	11.4	17.1	11.0	16.5	11.6	17.5	11.4	17.1	10.8	16.2	7.63	11.5
V_n/Ω_v	$\phi_v V_n$, kips	282	423	219	328	257	386	216	324	173	259	234	351
Z_x, in.^{3}		306		279		239		222		204		198	
L_p, ft		6.37		6.54		5.29		5.41		5.58		5.54	
L_r, ft		26.2		24.7		20.7		19.8		19.2		24.9	

ASD	LRFD
$\Omega_b = 1.67$	$\phi_b = 0.90$
$\Omega_v = 1.50$	$\phi_v = 1.00$

Note: Beams must be laterally supported if Table 3-7 is used.
Available strength tabulated above heavy line is limited by available shear strength.

F_y = 36 ksi

Table 3-7 (continued)
Maximum Total Uniform Load, kips
S-Shapes

S20-S15

Shape		S20×						S18×				S15×	
		86		75		66		70		54.7		50	
Design		ASD	LRFD	ASD	LRFD	ASD	LRFD	ASD	LRFD	ASD	LRFD	ASD	LRFD
Span, ft	4							369	553			238	356
	5			366	549			356	536			221	333
	6	386	579	364	547	291	436	297	446	239	358	184	277
	7	376	565	312	469	285	429	255	383	214	321	158	238
	8	329	494	273	410	250	375	223	335	187	281	138	208
	9	292	439	243	365	222	334	198	298	166	250	123	185
	10	263	395	218	328	200	300	178	268	149	225	111	166
	11	239	359	199	298	182	273	162	243	136	204	101	151
	12	219	329	182	274	166	250	149	223	125	187	92.2	139
	13	202	304	168	253	154	231	137	206	115	173	85.1	128
	14	188	282	156	235	143	214	127	191	107	160	79.0	119
	15	175	264	146	219	133	200	119	179	99.6	150	73.8	111
	16	164	247	137	205	125	188	111	167	93.4	140	69.2	104
	17	155	233	128	193	118	177	105	158	87.9	132	65.1	97.8
	18	146	220	121	182	111	167	99.0	149	83.0	125	61.5	92.4
	19	138	208	115	173	105	158	93.8	141	78.7	118	58.2	87.5
	20	131	198	109	164	99.9	150	89.1	134	74.7	112	55.3	83.2
	21	125	188	104	156	95.1	143	84.9	128	71.2	107	52.7	79.2
	22	120	180	99.3	149	90.8	136	81.0	122	67.9	102	50.3	75.6
	23	114	172	95.0	143	86.9	131	77.5	116	65.0	97.7	48.1	72.3
	24	110	165	91.0	137	83.2	125	74.3	112	62.3	93.6	46.1	69.3
	25	105	158	87.4	131	79.9	120	71.3	107	59.8	89.9	44.3	66.5
	26	101	152	84.0	126	76.8	115	68.5	103	57.5	86.4	42.6	64.0
	27	97.4	146	80.9	122	74.0	111	66.0	99.2	55.4	83.2	41.0	61.6
	28	93.9	141	78.0	117	71.3	107	63.6	95.7	53.4	80.2	39.5	59.4
	29	90.7	136	75.3	113	68.9	104	61.4	92.4	51.5	77.5	38.2	57.4
	30	87.7	132	72.8	109	66.6	100	59.4	89.3	49.8	74.9	36.9	
	32	82.2	124	68.3	103	62.4	93.8	55.7	83.7	46.7	70.2	34.6	52.0
	34	77.4	116	64.2	96.6	58.8	88.3	52.4	78.8	44.0	66.1	32.5	48.9
	36	73.1	110	60.7	91.2	55.5	83.4	49.5	74.4	41.5	62.4	30.7	46.2
	38	69.2	104	57.5	86.4	52.6	79.0	46.9	70.5	39.3	59.1		
	40	65.7	98.8	54.6	82.1	49.9	75.1	44.6	67.0	37.4	56.2		
	42	62.6	94.1	52.0	78.2	47.6	71.5	42.4	63.8	35.6	53.5		
	44	59.8	89.8	49.6	74.6	45.4	68.2	40.5	60.9	34.0	51.1		
	46	57.2	85.9	47.5	71.4	43.4	65.3						
	48	54.8	82.4	45.5	68.4	41.6	62.6						
	50	52.6	79.1	43.7	65.7	40.0	60.0						
Beam Properties													
W_b/Ω_b	$\phi_b W_b$, kip-ft	2630	3950	2180	3280	2000	3000	1780	2680	1490	2250	1110	1660
M_p/Ω_b	$\phi_b M_p$, kip-ft	329	494	273	410	250	375	223	335	187	281	138	208
M_r/Ω_b	$\phi_b M_r$, kip-ft	195	293	161	242	150	225	130	195	112	168	81.4	122
BF/Ω_b	$\phi_b BF$, kips	7.53	11.3	7.74	11.6	7.49	11.3	6.12	9.19	5.98	8.99	4.07	6.12
V_n/Ω_v	$\phi_v V_n$, kips	193	289	183	274	145	218	184	276	119	179	119	178
Z_x, in.^{3}		183		152		139		124		104		77.0	
L_p, ft		5.66		4.83		4.95		4.50		4.75		4.29	
L_r, ft		23.4		19.3		18.3		19.7		17.3		18.3	

ASD	LRFD
Ω_b = 1.67	ϕ_b = 0.90
Ω_v = 1.50	ϕ_v = 1.00

Note: Beams must be laterally supported if Table 3-7 is used.
Available strength tabulated above heavy line is limited by available shear strength.

S15-S10

Table 3-7 (continued)
Maximum Total Uniform Load, kips
S-Shapes

F_y = 36 ksi

Shape		S15×		S12×								S10×	
		42.9		50		40.8		35		31.8		35	
Design		ASD	LRFD	ASD	LRFD	ASD	LRFD	ASD	LRFD	ASD	LRFD	ASD	LRFD
Span, ft	2											171	257
	3			237	356							170	255
	4			219	329	160	240	148	222	121		127	191
	5	178	266	175	263	151	228	128	193	120	181	102	153
	6	166	249	146	219	126	190	107	161	100	150	84.8	127
	7	142	214	125	188	108	163	91.6	138	85.8	129	72.7	109
	8	124	187	109	164	94.7	142	80.1	120	75.1	113	63.6	95.6
	9	110	166	97.2	146	84.2	126	71.2	107	66.7	100	56.5	85.0
	10	99.4	149	87.5	132	75.7	114	64.1	96.3	60.1	90.3	50.9	76.5
	11	90.4	136	79.6	120	68.9	103	58.3	87.6	54.6	82.1	46.2	69.5
	12	82.9	125	72.9	110	63.1	94.9	53.4	80.3	50.1	75.2	42.4	63.7
	13	76.5	115	67.3	101	58.3	87.6	49.3	74.1	46.2	69.5	39.1	58.8
	14	71.0	107	62.5	94.0	54.1	81.3	45.8	68.8	42.9	64.5	36.3	54.6
	15	66.3	99.6	58.3	87.7	50.5	75.9	42.7	64.2	40.0	60.2	33.9	51.0
	16	62.2	93.4	54.7	82.2	47.3	71.1	40.1	60.2	37.5	56.4	31.8	47.8
	17	58.5	87.9	51.5	77.4	44.6	67.0	37.7	56.7	35.3	53.1	29.9	45.0
	18	55.2	83.0	48.6	73.1	42.1	63.2	35.6	53.5	33.4	50.2	28.3	42.5
	19	52.3	78.7	46.1	69.2	39.9	59.9	33.7	50.7	31.6	47.5	26.8	40.2
	20	49.7	74.7	43.8	65.8	37.9	56.9	32.0	48.2	30.0	45.1	25.4	38.2
	21	47.4	71.2	41.7	62.6	36.1	54.2	30.5	45.9	28.6	43.0	24.2	36.4
	22	45.2	67.9	39.8	59.8	34.4	51.7	29.1	43.8	27.3	41.0	23.1	34.8
	23	43.2	65.0	38.1	57.2	32.9	49.5	27.9	41.9	26.1	39.3	22.1	33.2
	24	41.4	62.3	36.5	54.8	31.6	47.4	26.7	40.1	25.0	37.6	21.2	31.9
	25	39.8	59.8	35.0	52.6	30.3	45.5	25.6	38.5	24.0	36.1	20.3	30.6
	26	38.2	57.5	33.7	50.6	29.1	43.8	24.7	37.1	23.1	34.7		
	27	36.8	55.4	32.4	48.7	28.1	42.2	23.7	35.7	22.2	33.4		
	28	35.5	53.4	31.3	47.0	27.0	40.7	22.9	34.4	21.5	32.2		
	29	34.3	51.5	30.2	45.4	26.1	39.3	22.1	33.2	20.7	31.1		
	30	33.1	49.8	29.2	43.8	25.2	37.9	21.4	32.1	20.0	30.1		
	32	31.1	46.7										
	34	29.2	44.0										
	36	27.6	41.5										
Beam Properties													
M_n/Ω_b	$\phi_b M_n$, kip-ft	994	1490	875	1320	757	1140	641	963	601	903	509	765
M_p/Ω_b	$\phi_b M_p$, kip-ft	124	187	109	164	94.7	142	80.1	120	75.1	113	63.6	95.6
M_r/Ω_b	$\phi_b M_r$, kip-ft	74.7	112	63.6	95.6	56.7	85.2	47.9	72.0	45.5	68.4	37.0	55.6
BF/Ω_b	$\phi_b BF$, kips	4.01	6.03	2.22	3.33	2.31	3.48	2.45	3.69	2.43	3.66	1.51	2.26
V_n/Ω_v	$\phi_v V_n$, kips	88.8	133	119	178	79.8	120	74.0	111	60.5	90.7	85.5	128
Z_x, in.^{3}		69.2		60.9		52.7		44.6		41.8		35.4	
L_p, ft		4.41		4.29		4.41		4.08		4.16		3.74	
L_r, ft		16.8		24.9		20.8		17.2		16.3		21.4	

ASD	LRFD
$\Omega_b = 1.67$	$\phi_b = 0.90$
$\Omega_v = 1.50$	$\phi_v = 1.00$

Note: Beams must be laterally supported if Table 3-7 is used.
Available strength tabulated above heavy line is limited by available shear strength.

F_y = 36 ksi

Table 3-7 (continued)
Maximum Total Uniform Load, kips
S-Shapes

S10-S5

Shape		S10×		S8×				S6×				S5×	
		25.4		23		18.4		17.25		12.5		10	
Design		ASD	LRFD	ASD	LRFD	ASD	LRFD	ASD	LRFD	ASD	LRFD	ASD	LRFD
Span, ft	2			102	152			75.4	113			30.8	46.2
	3			92.0	138	62.4	93.7	50.3	75.6	40.1	60.1	27.1	40.8
	4	89.6	134	69.0	104	59.3	89.1	37.7	56.7	30.4	45.6	20.3	30.6
	5	81.3	122	55.2	82.9	47.4	71.3	30.2	45.4	24.3	36.5	16.3	24.5
	6	67.8	102	46.0	69.1	39.5	59.4	25.1	37.8	20.2	30.4	13.6	20.4
	7	58.1	87.3	39.4	59.2	33.9	50.9	21.6	32.4	17.3	26.1	11.6	17.5
	8	50.8	76.4	34.5	51.8	29.6	44.6	18.9	28.4	15.2	22.8	10.2	15.3
	9	45.2	67.9	30.7	46.1	26.3	39.6	16.8	25.2	13.5	20.3	9.04	13.6
	10	40.7	61.1	27.6	41.5	23.7	35.6	15.1	22.7	12.1	18.3	8.13	12.2
	11	37.0	55.6	25.1	37.7	21.6	32.4	13.7	20.6	11.0	16.6	7.39	11.1
	12	33.9	50.9	23.0	34.6	19.8	29.7	12.6	18.9	10.1	15.2	6.78	10.2
	13	31.3	47.0	21.2	31.9	18.2	27.4	11.6	17.4	9.34	14.0		
	14	29.1	43.7	19.7	29.6	16.9	25.5	10.8	16.2	8.67	13.0		
	15	27.1	40.8	18.4	27.6	15.8	23.8	10.1	15.1	8.10	12.2		
	16	25.4	38.2	17.2	25.9	14.8	22.3						
	17	23.9	36.0	16.2	24.4	13.9	21.0						
	18	22.6	34.0	15.3	23.0	13.2	19.8						
	19	21.4	32.2	14.5	21.8	12.5	18.8						
	20	20.3	30.6	13.8	20.7	11.9	17.8						
	21	19.4	29.1										
	22	18.5	27.8										
	23	17.7	26.6										
	24	16.9	25.5										
	25	16.3	24.5										
Beam Properties													
W_x/Ω_b	$\phi_b W_x$, kip-ft	407	611	276	415	237	356	151	227	121	183	81.3	122
M_p/Ω_b	$\phi_b M_p$, kip-ft	50.8	76.4	34.5	51.8	29.6	44.6	18.9	28.4	15.2	22.8	10.2	15.3
M_r/Ω_b	$\phi_b M_r$, kip-ft	30.9	46.5	20.4	30.8	18.1	27.2	11.0	16.5	9.23	13.9	6.16	9.26
BF/Ω_b	$\phi_b BF$, kips	1.58	2.38	0.948	1.42	0.974	1.46	0.460	0.691	0.516	0.775	0.341	0.512
V_n/Ω_v	$\phi_v V_n$, kips	44.8	67.2	50.8	76.2	31.2	46.8	40.2	60.3	20.0	30.1	15.4	23.1
Z_x, in.^{3}		28.3		19.2		16.5		10.5		8.45		5.66	
L_p, ft		3.95		3.31		3.44		2.80		2.92		2.66	
L_r, ft		16.5		18.2		15.3		19.9		14.5		14.4	

ASD	LRFD
Ω_b = 1.67	ϕ_b = 0.90
Ω_v = 1.50	ϕ_v = 1.00

Note: Beams must be laterally supported if Table 3-7 is used.
Available strength tabulated above heavy line is limited by available shear strength.

S4-S3

Table 3-7 (continued)
Maximum Total Uniform Load, kips
S-Shapes

F_y = 36 ksi

Shape		S4×				S3×			
		9.5		7.7		7.5		5.7	
Design		ASD	LRFD	ASD	LRFD	ASD	LRFD	ASD	LRFD
Span, ft	2	29.0	43.6	22.2	33.4	16.9	25.4	13.9	21.0
	3	19.4	29.1	16.8	25.2	11.3	16.9	9.29	14.0
	4	14.5	21.8	12.6	18.9	8.44	12.7	6.97	10.5
	5	11.6	17.5	10.1	15.1	6.75	10.2	5.58	8.38
	6	9.68	14.5	8.38	12.6	5.63	8.46	4.65	6.98
	7	8.29	12.5	7.19	10.8	4.82	7.25	3.98	5.99
	8	7.26	10.9	6.29	9.45				
	9	6.45	9.70	5.59	8.40				
	10	5.81	8.73	5.03	7.56				
Beam Properties									
W_c/Ω_b	$\phi_b W_c$, kip-ft	58.1	87.3	50.3	75.6	33.8	50.8	27.9	41.9
M_p/Ω_b	$\phi_b M_p$, kip-ft	7.26	10.9	6.29	9.45	4.22	6.35	3.49	5.24
M_r/Ω_b	$\phi_b M_r$, kip-ft	4.25	6.39	3.81	5.73	2.44	3.67	2.10	3.16
BF/Ω_v	$\phi_b BF$, kips	0.190	0.285	0.202	0.304	0.0899	0.135	0.102	0.154
V_n/Ω_v	$\phi_v V_n$, kips	18.8	28.2	11.1	16.7	15.1	22.6	7.34	11.0
Z_x, in.^{3}		4.04		3.50		2.35		1.94	
L_p, ft		2.35		2.40		2.14		2.16	
L_r, ft		18.2		14.6		22.0		15.7	

ASD	LRFD
Ω_b = 1.67	ϕ_b = 0.90
Ω_v = 1.50	ϕ_v = 1.00

Note: Beams must be laterally supported if Table 3-7 is used.
Available strength tabulated above heavy line is limited by available shear strength.

Table 3-8
Maximum Total Uniform Load, kips
C-Shapes

F_y = 36 ksi

C15-C12

Shape		C15×						C12×					
		50		40		33.9		30		25		20.7	
Design		ASD	LRFD	ASD	LRFD	ASD	LRFD	ASD	LRFD	ASD	LRFD	ASD	LRFD
Span, ft	3	278	418					158	238	120	181		
	4	246	370	202	303	155	233	121	183	106	159	87.5	132
	5	197	296	165	248	146	219	97.1	146	84.5	127	73.6	111
	6	164	247	138	207	122	183	81.0	122	70.4	106	61.3	92.2
	7	141	211	118	177	104	157	69.4	104	60.4	90.7	52.6	79.0
	8	123	185	103	155	91.3	137	60.7	91.3	52.8	79.4	46.0	69.1
	9	109	164	91.8	138	81.1	122	54.0	81.1	46.9	70.6	40.9	61.4
	10	98.4	148	82.6	124	73.0	110	48.6	73.0	42.3	63.5	36.8	55.3
	11	89.5	135	75.1	113	66.4	99.8	44.2	66.4	38.4	57.7	33.4	50.3
	12	82.0	123	68.9	104	60.8	91.4	40.5	60.8	35.2	52.9	30.7	46.1
	13	75.7	114	63.6	95.5	56.2	84.4	37.4	56.2	32.5	48.8	28.3	42.5
	14	70.3	106	59.0	88.7	52.1	78.4	34.7	52.1	30.2	45.4	26.3	39.5
	15	65.6	98.6	55.1	82.8	48.7	73.2	32.4	48.7	28.2	42.3	24.5	36.9
	16	61.5	92.5	51.6	77.6	45.6	68.6	30.4	45.6	26.4	39.7	23.0	34.6
	17	57.9	87.0	48.6	73.1	42.9	64.5	28.6	42.9	24.9	37.4	21.6	32.5
	18	54.7	82.2	45.9	69.0	40.6	61.0	27.0	40.6	23.5	35.3	20.4	30.7
	19	51.8	77.9	43.5	65.4	38.4	57.8	25.6	38.4	22.2	33.4	19.4	29.1
	20	49.2	74.0	41.3	62.1	36.5	54.9	24.3	36.5	21.1	31.8	18.4	27.6
	21	46.9	70.5	39.3	59.1	34.8	52.3	23.1	34.8	20.1	30.2	17.5	26.3
	22	44.7	67.3	37.6	56.5	33.2	49.9	22.1	33.2	19.2	28.9	16.7	25.1
	23	42.8	64.3	35.9	54.0	31.7	47.7	21.1	31.7	18.4	27.6	16.0	24.0
	24	41.0	61.7	34.4	51.8	30.4	45.7	20.2	30.4	17.6	26.5	15.3	23.0
	25	39.4	59.2	33.1	49.7	29.2	43.9	19.4	29.2	16.9	25.4	14.7	22.1
	26	37.9	56.9	31.8	47.8	28.1	42.2	18.7	28.1	16.3	24.4	14.2	21.3
	27	36.5	54.8	30.6	46.0	27.0	40.6	18.0	27.0	15.6	23.5	13.6	20.5
	28	35.2	52.8	29.5	44.4	26.1	39.2	17.3	26.1	15.1	22.7	13.1	19.7
	29	33.9	51.0	28.5	42.8	25.2	37.8	16.7	25.2	14.6	21.9	12.7	19.1
	30	32.8	49.3	27.5	41.4	24.3	36.6	16.2	24.3	14.1	21.2	12.3	18.4
	31	31.8	47.7	26.7	40.1	23.6	35.4						
	32	30.8	46.2	25.8	38.8	22.8	34.3						
	33	29.8	44.8	25.0	37.6	22.1	33.3						
	34	29.0	43.5	24.3	36.5	21.5	32.3						
	35	28.1	42.3	23.6	35.5	20.9	31.4						
	36	27.3	41.1	23.0	34.5	20.3	30.5						
	37	26.6	40.0	22.3	33.6	19.7	29.7						
Beam Properties													
W_c/Ω_b	$\phi_b W_c$, kip-ft	984	1480	826	1240	730	1100	486	730	423	635	368	553
M_p/Ω_b	$\phi_b M_p$, kip-ft	123	185	103	155	91.3	137	60.7	91.3	52.8	79.4	46.0	69.1
M_r/Ω_b	$\phi_b M_r$, kip-ft	67.7	102	58.5	87.9	52.8	79.4	34.0	51.0	30.2	45.4	27.0	40.6
BF/Ω_b	$\phi_b BF$, kips	3.46	5.19	3.58	5.40	3.58	5.36	2.18	3.30	2.22	3.35	2.16	3.25
V_n/Ω_v	$\phi_v V_n$, kips	139	209	101	152	77.6	117	79.2	119	60.1	90.3	43.8	65.8
Z_x, in.^{3}		68.5		57.5		50.8		33.8		29.4		25.6	
L_p, ft		3.60		3.68		3.75		3.17		3.24		3.32	
L_r, ft		19.6		16.1		14.5		15.4		13.4		12.1	

ASD	LRFD
Ω_b = 1.67	ϕ_b = 0.90
Ω_v = 1.67	ϕ_v = 0.90

Note: For beams laterally unsupported, see Table 3-11.
Available strength tabulated above heavy line is limited by available shear strength.

C10-C9

Table 3-8 (continued)
Maximum Total Uniform Load, kips
C-Shapes

F_y = 36 ksi

Shape		C10×								C9×	
		30		25		20		15.3		20	
Design		ASD	LRFD	ASD	LRFD	ASD	LRFD	ASD	LRFD	ASD	LRFD
Span, ft	2	174	262	136	205	98.0	147			104	157
	3	128	192	111	166	92.9	140	62.1	93.3	81.0	122
	4	95.9	144	83.0	125	69.7	105	57.1	85.9	60.7	91.3
	5	76.7	115	66.4	99.8	55.8	83.8	45.7	68.7	48.6	73.0
	6	64.0	96.1	55.3	83.2	46.5	69.8	38.1	57.2	40.5	60.8
	7	54.8	82.4	47.4	71.3	39.8	59.9	32.6	49.1	34.7	52.1
	8	48.0	72.1	41.5	62.4	34.9	52.4	28.6	42.9	30.4	45.6
	9	42.6	64.1	36.9	55.4	31.0	46.6	25.4	38.2	27.0	40.6
	10	38.4	57.7	33.2	49.9	27.9	41.9	22.9	34.3	24.3	36.5
	11	34.9	52.4	30.2	45.4	25.3	38.1	20.8	31.2	22.1	33.2
	12	32.0	48.1	27.7	41.6	23.2	34.9	19.0	28.6	20.2	30.4
	13	29.5	44.4	25.5	38.4	21.4	32.2	17.6	26.4	18.7	28.1
	14	27.4	41.2	23.7	35.6	19.9	29.9	16.3	24.5	17.3	26.1
	15	25.6	38.4	22.1	33.3	18.6	27.9	15.2	22.9	16.2	24.3
	16	24.0	36.0	20.7	31.2	17.4	26.2	14.3	21.5	15.2	22.8
	17	22.6	33.9	19.5	29.4	16.4	24.6	13.4	20.2	14.3	21.5
	18	21.3	32.0	18.4	27.7	15.5	23.3	12.7	19.1	13.5	20.3
	19	20.2	30.4	17.5	26.3	14.7	22.1	12.0	18.1	12.8	19.2
	20	19.2	28.8	16.6	24.9	13.9	21.0	11.4	17.2	12.1	18.3
	21	18.3	27.5	15.8	23.8	13.3	20.0	10.9	16.4	11.6	17.4
	22	17.4	26.2	15.1	22.7	12.7	19.0	10.4	15.6	11.0	16.6
	23	16.7	25.1	14.4	21.7	12.1	18.2	9.93	14.9		
	24	16.0	24.0	13.8	20.8	11.6	17.5	9.52	14.3		
	25	15.3	23.1	13.3	20.0	11.2	16.8	9.14	13.7		
Beam Properties											
W_c/Ω_b	$\phi_b W_c$, kip-ft	384	577	332	499	279	419	229	343	243	365
M_p/Ω_b	$\phi_b M_p$, kip-ft	48.0	72.1	41.5	62.4	34.9	52.4	28.6	42.9	30.4	45.6
M_r/Ω_b	$\phi_b M_r$, kip-ft	26.0	39.1	22.9	34.4	19.9	29.9	17.0	25.5	17.0	25.5
BF/Ω_b	$\phi_b BF$, kips	1.27	1.91	1.40	2.11	1.48	2.22	1.44	2.16	1.12	1.68
V_n/Ω_v	$\phi_v V_n$, kips	87.0	131	68.0	102	49.0	73.7	31.0	46.7	52.2	78.4
Z_x, in.^{3}		26.7		23.1		19.4		15.9		16.9	
L_p, ft		2.78		2.81		2.87		2.96		2.66	
L_r, ft		20.1		16.1		13.0		11.0		14.6	

ASD	LRFD
$\Omega_b = 1.67$	$\phi_b = 0.90$
$\Omega_v = 1.67$	$\phi_v = 0.90$

Note: For beams laterally unsupported, see Table 3-11.
Available strength tabulated above heavy line is limited by available shear strength.

F_y = 36 ksi

Table 3-8 (continued)
Maximum Total Uniform Load, kips
C-Shapes

C9-C8

Shape		C9×				C8×					
		15		13.4		18.75		13.7		11.5	
Design		ASD	LRFD	ASD	LRFD	ASD	LRFD	ASD	LRFD	ASD	LRFD
Span, ft	2	66.4	99.7			99.9	150	62.7	94.2		
	3	65.1	97.9	54.2	81.5	66.6	100	52.7	79.2	45.5	68.4
	4	48.9	73.4	45.3	68.0	49.9	75.1	39.5	59.4	34.6	52.0
	5	39.1	58.8	36.2	54.4	40.0	60.0	31.6	47.5	27.7	41.6
	6	32.6	49.0	30.2	45.4	33.3	50.0	26.3	39.6	23.1	34.7
	7	27.9	42.0	25.9	38.9	28.5	42.9	22.6	33.9	19.8	29.7
	8	24.4	36.7	22.6	34.0	25.0	37.5	19.8	29.7	17.3	26.0
	9	21.7	32.6	20.1	30.2	22.2	33.4	17.6	26.4	15.4	23.1
	10	19.5	29.4	18.1	27.2	20.0	30.0	15.8	23.8	13.8	20.8
	11	17.8	26.7	16.5	24.7	18.2	27.3	14.4	21.6	12.6	18.9
	12	16.3	24.5	15.1	22.7	16.6	25.0	13.2	19.8	11.5	17.3
	13	15.0	22.6	13.9	20.9	15.4	23.1	12.2	18.3	10.6	16.0
	14	14.0	21.0	12.9	19.4	14.3	21.4	11.3	17.0	9.89	14.9
	15	13.0	19.6	12.1	18.1	13.3	20.0	10.5	15.8	9.23	13.9
	16	12.2	18.4	11.3	17.0	12.5	18.8	9.88	14.9	8.65	13.0
	17	11.5	17.3	10.7	16.0	11.8	17.7	9.30	14.0	8.14	12.2
	18	10.9	16.3	10.1	15.1	11.1	16.7	8.78	13.2	7.69	11.6
	19	10.3	15.5	9.53	14.3	10.5	15.8	8.32	12.5	7.28	10.9
	20	9.77	14.7	9.05	13.6	9.99	15.0	7.90	11.9	6.92	10.4
	21	9.31	14.0	8.62	13.0						
	22	8.88	13.4	8.23	12.4						
Beam Properties											
W_c/Ω_b	$\phi_b W_c$, kip-ft	195	294	181	272	200	300	158	238	138	208
M_p/Ω_b	$\phi_b M_p$, kip-ft	24.4	36.7	22.6	34.0	25.0	37.5	19.8	29.7	17.3	26.0
M_r/Ω_b	$\phi_b M_r$, kip-ft	14.2	21.4	13.3	20.0	13.8	20.8	11.3	17.0	10.2	15.4
BF/Ω_b	$\phi_b BF$, kips	1.18	1.77	1.17	1.77	0.829	1.24	0.929	1.39	0.909	1.36
V_n/Ω_v	$\phi_v V_n$, kips	33.2	49.9	27.1	40.8	50.4	75.7	31.4	47.1	22.8	34.2
Z_x, in.^{3}		13.6		12.6		13.9		11.0		9.63	
L_p, ft		2.74		2.77		2.49		2.55		2.59	
L_r, ft		11.4		10.7		16.0		11.7		10.4	

ASD	LRFD
$\Omega_b = 1.67$	$\phi_b = 0.90$
$\Omega_v = 1.67$	$\phi_v = 0.90$

Note: For beams laterally unsupported, see Table 3-11.
Available strength tabulated above heavy line is limited by available shear strength.

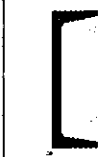

C7-C6

Table 3-8 (continued)
Maximum Total Uniform Load, kips
C-Shapes

F_y = 36 ksi

Shape		C7×						C6×			
		14.75		12.25		9.8		13		10.5	
Design		ASD	LRFD	ASD	LRFD	ASD	LRFD	ASD	LRFD	ASD	LRFD
Span, ft	2	70.1	105	56.9	85.5	38.0	57.2	52.4	78.7	44.4	66.7
	3	46.7	70.2	40.5	60.9	34.4	51.8	34.9	52.5	29.6	44.5
	4	35.0	52.7	30.4	45.7	25.8	38.8	26.2	39.4	22.2	33.4
	5	28.0	42.1	24.3	36.5	20.7	31.1	21.0	31.5	17.8	26.7
	6	23.4	35.1	20.3	30.5	17.2	25.9	17.5	26.2	14.8	22.2
	7	20.0	30.1	17.4	26.1	14.8	22.2	15.0	22.5	12.7	19.1
	8	17.5	26.3	15.2	22.8	12.9	19.4	13.1	19.7	11.1	16.7
	9	15.6	23.4	13.5	20.3	11.5	17.3	11.6	17.5	9.87	14.8
	10	14.0	21.1	12.2	18.3	10.3	15.5	10.5	15.7	8.88	13.3
	11	12.7	19.1	11.1	16.6	9.39	14.1	9.52	14.3	8.07	12.1
	12	11.7	17.6	10.1	15.2	8.61	12.9	8.73	13.1	7.40	11.1
	13	10.8	16.2	9.35	14.1	7.95	11.9	8.06	12.1	6.83	10.3
	14	10.0	15.0	8.68	13.1	7.38	11.1	7.48	11.2	6.34	9.53
	15	9.34	14.0	8.11	12.2	6.89	10.4	6.98	10.5	5.92	8.90
	16	8.76	13.2	7.60	11.4	6.46	9.72				
	17	8.24	12.4	7.15	10.7	6.08	9.14				
Beam Properties											
W_c/Ω_b	$\phi_b W_c$, kip-ft	140	211	122	183	103	155	105	157	88.8	133
M_p/Ω_b	$\phi_b M_p$, kip-ft	17.5	26.3	15.2	22.8	12.9	19.4	13.1	19.7	11.1	16.7
M_r/Ω_b	$\phi_b M_r$, kip-ft	9.78	14.7	8.70	13.1	7.63	11.5	7.27	10.9	6.34	9.53
BF/Ω_b	$\phi_b BF$, kips	0.620	0.931	0.661	0.986	0.677	1.01	0.413	0.623	0.458	0.689
V_n/Ω_v	$\phi_v V_n$, kips	37.9	57.0	28.4	42.7	19.0	28.6	33.9	51.0	24.4	36.6
Z_x, in.^{3}		9.75		8.46		7.19		7.29		6.18	
L_p, ft		2.34		2.36		2.41		2.18		2.20	
L_r, ft		14.8		12.2		10.2		16.3		12.6	

ASD	LRFD
Ω_b = 1.67	ϕ_b = 0.90
Ω_v = 1.67	ϕ_v = 0.90

Note: For beams laterally unsupported, see Table 3-11.
Available strength tabulated above heavy line is limited by available shear strength.

F_y = 36 ksi

Table 3-8 (continued)
Maximum Total Uniform Load, kips
C-Shapes

C6-C4

Shape		C6×		C5×				C4×					
		8.2		9		6.7		7.25		6.25		5.4	
Design		ASD	LRFD	ASD	LRFD	ASD	LRFD	ASD	LRFD	ASD	LRFD	ASD	LRFD
Span, ft	2	31.0	46.7	31.5	47.4	24.6	36.9	20.4	30.7	17.5	26.2	16.5	24.7
	3	24.7	37.2	21.0	31.6	17.0	25.6	13.6	20.4	11.8	17.5	11.0	16.5
	4	18.5	27.9	15.8	23.7	12.8	19.2	10.2	15.3	8.73	13.1	8.23	12.4
	5	14.8	22.3	12.6	19.0	10.2	15.3	8.16	12.3	6.98	10.5	6.58	9.89
	6	12.4	18.6	10.5	15.8	8.50	12.8	6.80	10.2	5.82	8.75	5.49	8.24
	7	10.6	15.9	9.01	13.5	7.29	11.0	5.83	8.76	4.99	7.50	4.70	7.07
	8	9.27	13.9	7.89	11.9	6.38	9.59	5.10	7.67	4.37	6.56	4.11	6.18
	9	8.24	12.4	7.01	10.5	5.67	8.52	4.53	6.82	3.88	5.83	3.66	5.50
	10	7.42	11.1	6.31	9.48	5.10	7.67	4.08	6.13	3.49	5.25	3.29	4.95
	11	6.74	10.1	5.74	8.62	4.64	6.97						
	12	6.18	9.29	5.26	7.90	4.25	6.39						
	13	5.70	8.57										
	14	5.30	7.96										
	15	4.94	7.43										
Beam Properties													
M_n/Ω_b	$\phi_b M_n$, kip-ft	74.2	111	63.1	94.8	51.0	76.7	40.8	61.3	34.9	52.5	32.9	49.5
M_p/Ω_b	$\phi_b M_p$, kip-ft	9.27	13.9	7.89	11.9	6.38	9.59	5.10	7.67	4.37	6.56	4.11	6.18
M_r/Ω_b	$\phi_b M_r$, kip-ft	5.47	8.22	4.48	6.73	3.76	5.65	2.88	4.33	2.51	3.78	2.41	3.63
BF/Ω_b	$\phi_b BF$, kips	0.477	0.713	0.287	0.435	0.313	0.471	0.165	0.249	0.178	0.266	0.186	0.279
V_n/Ω_v	$\phi_v V_n$, kips	15.5	23.3	21.0	31.6	12.3	18.5	16.6	25.0	12.8	19.2	9.52	14.3
Z_x, in.^{3}		5.16		4.39		3.55		2.84		2.43		2.29	
L_p, ft		2.23		2.02		2.04		1.86		1.84		1.85	
L_r, ft		10.2		13.9		10.4		15.3		12.3		11.0	

ASD	LRFD
Ω_b = 1.67	ϕ_b = 0.90
Ω_v = 1.67	ϕ_v = 0.90

Note: For beams laterally unsupported, see Table 3-11.
Available strength tabulated above heavy line is limited by available shear strength.

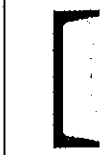

C4-C3

Table 3-8 (continued)
Maximum Total Uniform Load, kips
C-Shapes

F_y = 36 ksi

Shape		C4×		C3×							
		4.5		6		5		4.1		3.5	
Design		ASD	LRFD	ASD	LRFD	ASD	LRFD	ASD	LRFD	ASD	LRFD
Span, ft	2	12.9	19.4	12.5	18.8	10.9	16.4	9.49	14.3	8.91	13.4
	3	10.2	15.3	8.34	12.5	7.28	10.9	6.32	9.50	5.94	8.93
	4	7.62	11.4	6.25	9.40	5.46	8.21	4.74	7.13	4.46	6.70
	5	6.09	9.16	5.00	7.52	4.37	6.57	3.79	5.70	3.56	5.36
	6	5.08	7.63	4.17	6.26	3.64	5.47	3.16	4.75	2.97	4.46
	7	4.35	6.54	3.57	5.37	3.12	4.69	2.71	4.07	2.55	3.83
	8	3.81	5.72								
	9	3.39	5.09								
	10	3.05	4.58								
Beam Properties											
W_c/Ω_b	$\phi_b W_c$, kip-ft	30.5	45.8	25.0	37.6	21.8	32.8	19.0	28.5	17.8	26.8
M_p/Ω_b	$\phi_b M_p$, kip-ft	3.81	5.72	3.13	4.70	2.73	4.10	2.37	3.56	2.23	3.35
M_r/Ω_b	$\phi_b M_r$, kip-ft	2.30	3.46	1.74	2.61	1.55	2.32	1.38	2.08	1.31	1.97
BF/Ω_b	$\phi_b BF$, kips	0.184	0.276	0.0760	0.114	0.0861	0.130	0.0930	0.139	0.0962	0.144
V_n/Ω_v	$\phi_v V_n$, kips	6.47	9.72	13.8	20.8	10.0	15.0	6.60	9.91	5.12	7.70
Z_x, in.^{3}		2.12		1.74		1.52		1.32		1.24	
L_p, ft		1.90		1.72		1.69		1.66		1.64	
L_r, ft		10.1		20.0		15.4		12.3		11.2	

ASD	LRFD
Ω_b = 1.67	ϕ_b = 0.90
Ω_v = 1.67	ϕ_v = 0.90

Note: For beams laterally unsupported, see Table 3-11.
Available strength tabulated above heavy line is limited by available shear strength.

Table 3-9
Maximum Total Uniform Load, kips
MC-Shapes

F_y = 36 ksi

MC18-MC13

Shape		MC18×								MC13×			
		58		51.9		45.8		42.7		50		40	
Design		ASD	LRFD	ASD	LRFD	ASD	LRFD	ASD	LRFD	ASD	LRFD	ASD	LRFD
Span, ft	3									265	398	188	283
	4	326	490	279	420	233	350			218	328	184	276
	5	274	412	251	377	228	342	210	315	175	263	147	221
	6	229	343	209	314	190	285	180	270	146	219	123	184
	7	196	294	179	269	163	244	154	232	125	188	105	158
	8	171	258	157	236	142	214	135	203	109	164	92.0	138
	9	152	229	139	210	126	190	120	180	97.1	146	81.8	123
	10	137	206	125	189	114	171	108	162	87.4	131	73.6	111
	11	125	187	114	171	103	156	98.1	147	79.4	119	66.9	101
	12	114	172	105	157	94.9	143	89.9	135	72.8	109	61.3	92.2
	13	105	159	96.5	145	87.6	132	83.0	125	67.2	101	56.6	85.1
	14	97.9	147	89.6	135	81.3	122	77.1	116	62.4	93.8	52.6	79.0
	15	91.4	137	83.6	126	75.9	114	72.0	108	58.3	87.6	49.1	73.7
	16	85.7	129	78.4	118	71.1	107	67.5	101	54.6	82.1	46.0	69.1
	17	80.6	121	73.8	111	67.0	101	63.5	95.4	51.4	77.3	43.3	65.1
	18	76.2	114	69.7	105	63.2	95.0	60.0	90.1	48.5	73.0	40.9	61.4
	19	72.2	108	66.0	99.2	59.9	90.0	56.8	85.4	46.0	69.1	38.7	58.2
	20	68.6	103	62.7	94.3	56.9	85.5	54.0	81.1	43.7	65.7	36.8	55.3
	21	65.3	98.1	59.7	89.8	54.2	81.5	51.4	77.2	41.6	62.5	35.0	52.7
	22	62.3	93.7	57.0	85.7	51.7	77.8	49.1	73.7	39.7	59.7	33.4	50.3
	23	59.6	89.6	54.5	82.0	49.5	74.4	46.9	70.5	38.0	57.1	32.0	48.1
	24	57.1	85.9	52.3	78.6	47.4	71.3	45.0	67.6	36.4	54.7	30.7	46.1
	25	54.8	82.4	50.2	75.4	45.5	68.4	43.2	64.9	35.0	52.5	29.4	44.2
	26	52.7	79.3	48.3	72.5	43.8	65.8	41.5	62.4	33.6	50.5	28.3	42.5
	27	50.8	76.3	46.5	69.8	42.2	63.4	40.0	60.1	32.4	48.6	27.3	41.0
	28	49.0	73.6	44.8	67.3	40.7	61.1	38.5	57.9	31.2	46.9	26.3	39.5
	29	47.3	71.1	43.3	65.0	39.2	59.0	37.2	55.9	30.1	45.3	25.4	38.1
	30	45.7	68.7	41.8	62.9	37.9	57.0	36.0	54.1	29.1	43.8	24.5	36.9
	32	42.8	64.4	39.2	58.9	35.6	53.5	33.7	50.7	27.3	41.0	23.0	34.6
	34	40.3	60.6	36.9	55.5	33.5	50.3	31.7	47.7				
	36	38.1	57.2	34.9	52.4	31.6	47.5	30.0	45.1				
	38	36.1	54.2	33.0	49.6	30.0	45.0	28.4	42.7				
	40	34.3	51.5	31.4	47.1	28.5	42.8	27.0	40.6				
	42	32.6	49.1	29.9	44.9	27.1	40.7	25.7	38.6				
	44	31.2	46.8	28.5	42.9	25.9	38.9	24.5	36.9				
Beam Properties													
W_x/Ω_b	$\phi_b W_x$, kip-ft	1370	2060	1250	1890	1140	1710	1080	1620	874	1310	736	1110
M_p/Ω_b	$\phi_b M_p$, kip-ft	171	258	157	236	142	214	135	203	109	164	92.0	138
M_r/Ω_b	$\phi_b M_r$, kip-ft	94.3	142	87.5	132	80.7	121	77.3	116	60.7	91.3	52.7	79.2
BF/Ω_b	$\phi_b BF$, kips	5.16	7.81	5.26	7.87	5.23	7.93	5.17	7.80	2.08	3.13	2.28	3.42
V_n/Ω_v	$\phi_v V_n$, kips	163	245	140	210	116	175	105	157	132	199	94.2	142
Z_x, in.^{3}		95.4		87.3		79.2		75.1		60.8		51.2	
L_p, ft		4.25		4.29		4.37		4.45		4.41		4.50	
L_r, ft		19.1		17.5		16.1		15.6		27.6		21.7	

ASD	LRFD
Ω_b = 1.67	ϕ_b = 0.90
Ω_v = 1.67	ϕ_v = 0.90

Note: For beams laterally unsupported, see Table 3-11.
Available strength tabulated above heavy line is limited by available shear strength.

Table 3-9 (continued)
Maximum Total Uniform Load, kips

F_y = 36 ksi

MC13-MC12 MC-Shapes

Shape		MC13×				MC12×							
		35		31.8		50		45		40		35	
Design		ASD	LRFD	ASD	LRFD	ASD	LRFD	ASD	LRFD	ASD	LRFD	ASD	LRFD
Span, ft	3					259	390	220	331	183	275		
	4	150	226	126	190	203	305	187	281	171	258	144	217
	5	134	201	125	187	162	244	149	225	137	206	124	187
	6	111	167	104	156	135	203	125	187	114	172	103	156
	7	95.5	143	89.1	134	116	174	107	160	97.9	147	88.7	133
	8	83.5	126	78.0	117	101	153	93.4	140	85.7	129	77.6	117
	9	74.8	112	69.3	104	90.2	136	83.0	125	76.2	114	69.0	104
	10	66.8	100	62.4	93.7	81.2	122	74.7	112	68.6	103	62.1	93.3
	11	60.8	91.3	56.7	85.2	73.8	111	67.9	102	62.3	93.7	56.4	84.8
	12	55.7	83.7	52.0	78.1	67.7	102	62.3	93.6	57.1	85.9	51.7	77.8
	13	51.4	77.3	48.0	72.1	62.5	93.9	57.5	86.4	52.7	79.3	47.8	71.8
	14	47.7	71.7	44.6	67.0	58.0	87.2	53.4	80.2	49.0	73.6	44.3	66.7
	15	44.6	67.0	41.6	62.5	54.1	81.4	49.8	74.9	45.7	68.7	41.4	62.2
	16	41.8	62.8	39.0	58.6	50.7	76.3	46.7	70.2	42.8	64.4	38.8	58.3
	17	39.3	59.1	36.7	55.1	47.8	71.8	44.0	66.1	40.3	60.6	36.5	54.9
	18	37.1	55.8	34.7	52.1	45.1	67.8	41.5	62.4	38.1	57.2	34.5	51.8
	19	35.2	52.9	32.8	49.3	42.7	64.2	39.3	59.1	36.1	54.2	32.7	49.1
	20	33.4	50.2	31.2	46.9	40.6	61.0	37.4	56.2	34.3	51.5	31.0	46.7
	21	31.8	47.8	29.7	44.6	38.7	58.1	35.6	53.5	32.6	49.1	29.6	44.4
	22	30.4	45.7	28.4	42.6	36.9	55.5	34.0	51.1	31.2	46.8	28.2	42.4
	23	29.1	43.7	27.1	40.8	35.3	53.1	32.5	48.8	29.8	44.8	27.0	40.6
	24	27.8	41.9	26.0	39.1	33.8	50.9	31.1	46.8	28.6	42.9	25.9	38.9
	25	26.7	40.2	24.9	37.5	32.5	48.8	29.9	44.9	27.4	41.2	24.8	37.3
	26	25.7	38.6	24.0	36.1	31.2	46.9	28.7	43.2	26.4	39.6	23.9	35.9
	27	24.8	37.2	23.1	34.7	30.1	45.2	27.7	41.6	25.4	38.2	23.0	34.6
	28	23.9	35.9	22.3	33.5	29.0	43.6	26.7	40.1	24.5	36.8	22.2	33.3
	29	23.0	34.6	21.5	32.3	28.0	42.1	25.8	38.7	23.6	35.5	21.4	32.2
	30	22.3	33.5	20.8	31.2	27.1	40.7	24.9	37.4	22.9	34.3	20.7	31.1
	32	20.9	31.4	19.5	29.3								
Beam Properties													
W_x/Ω_b	$\phi_b W_x$, kip-ft	668	1000	624	937	812	1220	747	1120	686	1030	621	933
M_p/Ω_b	$\phi_b M_p$, kip-ft	83.5	126	78.0	117	101	153	93.4	140	85.7	129	77.6	117
M_r/Ω_b	$\phi_b M_r$, kip-ft	48.8	73.3	46.1	69.4	56.5	84.9	52.7	79.2	49.0	73.7	45.3	68.0
BF/Ω_b	$\phi_b BF$, kips	2.34	3.55	2.31	3.44	1.65	2.53	1.77	2.65	1.87	2.82	1.92	2.92
V_n/Ω_v	$\phi_v V_n$, kips	75.2	113	63.1	94.8	130	195	110	166	91.6	138	72.2	108
Z_x, in.^{3}		46.5		43.4		56.5		52.0		47.7		43.2	
L_p, ft		4.54		4.58		4.54		4.54		4.58		4.62	
L_r, ft		19.4		18.4		31.5		27.5		24.2		21.4	

ASD	LRFD
Ω_b = 1.67	ϕ_b = 0.90
Ω_v = 1.67	ϕ_v = 0.90

Note: For beams laterally unsupported, see Table 3-11.
Available strength tabulated above heavy line is limited by available shear strength.

F_y = 36 ksi

Table 3-9 (continued)
Maximum Total Uniform Load, kips
MC-Shapes

MC12-MC10

Shape		MC12×						MC10×					
		31		14.3		10.6		41.1		33.6		28.5	
Design		ASD	LRFD	ASD	LRFD	ASD	LRFD	ASD	LRFD	ASD	LRFD	ASD	LRFD
Span, ft	2			77.6	117	59.0	88.6	206	309				
	3			76.2	114	55.6	83.5	188	283	149	224	110	165
	4	115	173	57.1	85.9	41.7	62.6	141	212	121	182	108	162
	5	114	172	45.7	68.7	33.3	50.1	113	170	96.9	146	86.2	130
	6	95.1	143	38.1	57.2	27.8	41.8	94.1	141	80.7	121	71.9	108
	7	81.5	123	32.6	49.1	23.8	35.8	80.7	121	69.2	104	61.6	92.6
	8	71.3	107	28.6	42.9	20.8	31.3	70.6	106	60.5	91.0	53.9	81.0
	9	63.4	95.3	25.4	38.2	18.5	27.8	62.8	94.3	53.8	80.9	47.9	72.0
	10	57.1	85.8	22.9	34.3	16.7	25.1	56.5	84.9	48.4	72.8	43.1	64.8
	11	51.9	78.0	20.8	31.2	15.2	22.8	51.3	77.2	44.0	66.2	39.2	58.9
	12	47.5	71.5	19.0	28.6	13.9	20.9	47.1	70.7	40.4	60.7	35.9	54.0
	13	43.9	66.0	17.6	26.4	12.8	19.3	43.4	65.3	37.3	56.0	33.2	49.8
	14	40.8	61.3	16.3	24.5	11.9	17.9	40.3	60.6	34.6	52.0	30.8	46.3
	15	38.0	57.2	15.2	22.9	11.1	16.7	37.7	56.6	32.3	48.5	28.7	43.2
	16	35.7	53.6	14.3	21.5	10.4	15.7	35.3	53.1	30.3	45.5	26.9	40.5
	17	33.6	50.4	13.4	20.2	9.81	14.7	33.2	49.9	28.5	42.8	25.4	38.1
	18	31.7	47.6	12.7	19.1	9.26	13.9	31.4	47.2	26.9	40.4	24.0	36.0
	19	30.0	45.1	12.0	18.1	8.77	13.2	29.7	44.7	25.5	38.3	22.7	34.1
	20	28.5	42.9	11.4	17.2	8.34	12.5	28.2	42.4	24.2	36.4	21.6	32.4
	21	27.2	40.8	10.9	16.4	7.94	11.9	26.9	40.4	23.1	34.7	20.5	30.9
	22	25.9	39.0	10.4	15.6	7.58	11.4	25.7	38.6	22.0	33.1	19.6	29.5
	23	24.8	37.3	9.93	14.9	7.25	10.9	24.6	36.9	21.1	31.6	18.7	28.2
	24	23.8	35.7	9.52	14.3	6.95	10.4	23.5	35.4	20.2	30.3	18.0	27.0
	25	22.8	34.3	9.14	13.7	6.67	10.0	22.6	34.0	19.4	29.1	17.2	25.9
	26	21.9	33.0	8.79	13.2	6.41	9.64						
	27	21.1	31.8	8.46	12.7	6.17	9.28						
	28	20.4	30.6	8.16	12.3	5.95	8.95						
	29	19.7	29.6	7.88	11.8	5.75	8.64						
	30	19.0	28.6	7.62	11.4	5.56	8.35						
Beam Properties													
W_c/Ω_b	$\phi_b W_c$, kip-ft	571	858	229	343	167	251	565	849	484	728	431	648
M_p/Ω_b	$\phi_b M_p$, kip-ft	71.3	107	28.6	42.9	20.8	31.3	70.6	106	60.5	91.0	53.9	81.0
M_r/Ω_b	$\phi_b M_r$, kip-ft	42.4	63.7	16.0	24.0	11.6	17.4	39.6	59.5	35.0	52.5	31.8	47.8
BF/Ω_b	$\phi_b BF$, kips	1.90	2.85	2.49	3.73	2.72	4.11	1.00	1.50	1.13	1.71	1.22	1.83
V_n/Ω_v	$\phi_v V_n$, kips	57.4	86.3	38.8	58.3	29.5	44.3	103	155	74.4	112	55.0	82.6
Z_x, in.^{3}		39.7		15.9		11.6		39.3		33.7		30.0	
L_p, ft		4.62		2.04		1.45		4.75		4.79		4.83	
L_r, ft		19.8		7.11		4.83		35.7		27.3		23.0	

ASD	LRFD
Ω_b = 1.67	ϕ_b = 0.90
Ω_v = 1.67	ϕ_v = 0.90

Note: For beams laterally unsupported, see Table 3-11.
Available strength tabulated above heavy line is limited by available shear strength.

MC10-MC9

Table 3-9 (continued)
Maximum Total Uniform Load, kips
MC-Shapes

F_y = 36 ksi

Shape		MC10×								MC9×			
		25		22		8.4		6.5		25.4		23.9	
Design		ASD	LRFD	ASD	LRFD	ASD	LRFD	ASD	LRFD	ASD	LRFD	ASD	LRFD
Span, ft	2					44.0	66.1	39.3	59.1				
	3	98.3	148			37.9	57.0	28.3	42.5	105	157	93.1	140
	4	94.1	141	75.0	113	28.5	42.8	21.2	31.9	84.4	127	80.8	121
	5	75.3	113	68.7	103	22.8	34.2	17.0	25.5	67.5	102	64.7	97.2
	6	62.8	94.3	57.2	86.0	19.0	28.5	14.1	21.2	56.3	84.6	53.9	81.0
	7	53.8	80.8	49.1	73.7	16.3	24.4	12.1	18.2	48.2	72.5	46.2	69.4
	8	47.1	70.7	42.9	64.5	14.2	21.4	10.6	15.9	42.2	63.5	40.4	60.8
	9	41.8	62.9	38.2	57.4	12.6	19.0	9.42	14.2	37.5	56.4	35.9	54.0
	10	37.7	56.6	34.3	51.6	11.4	17.1	8.48	12.7	33.8	50.8	32.3	48.6
	11	34.2	51.4	31.2	46.9	10.3	15.6	7.71	11.6	30.7	46.1	29.4	44.2
	12	31.4	47.2	28.6	43.0	9.49	14.3	7.07	10.6	28.1	42.3	26.9	40.5
	13	29.0	43.5	26.4	39.7	8.76	13.2	6.52	9.80	26.0	39.0	24.9	37.4
	14	26.9	40.4	24.5	36.9	8.13	12.2	6.06	9.10	24.1	36.3	23.1	34.7
	15	25.1	37.7	22.9	34.4	7.59	11.4	5.65	8.50	22.5	33.8	21.6	32.4
	16	23.5	35.4	21.5	32.3	7.11	10.7	5.30	7.97	21.1	31.7	20.2	30.4
	17	22.1	33.3	20.2	30.4	6.70	10.1	4.99	7.50	19.9	29.9	19.0	28.6
	18	20.9	31.4	19.1	28.7	6.32	9.50	4.71	7.08	18.8	28.2	18.0	27.0
	19	19.8	29.8	18.1	27.2	5.99	9.00	4.46	6.71	17.8	26.7	17.0	25.6
	20	18.8	28.3	17.2	25.8	5.69	8.55	4.24	6.37	16.9	25.4	16.2	24.3
	21	17.9	26.9	16.4	24.6	5.42	8.15	4.04	6.07	16.1	24.2	15.4	23.1
	22	17.1	25.7	15.6	23.5	5.17	7.78	3.85	5.79	15.4	23.1	14.7	22.1
	23	16.4	24.6	14.9	22.4	4.95	7.44	3.69	5.54				
	24	15.7	23.6	14.3	21.5	4.74	7.13	3.53	5.31				
	25	15.1	22.6	13.7	20.6	4.55	6.84	3.39	5.10				
Beam Properties													
W_c/Ω_b	$\phi_b W_c$, kip-ft	377	566	344	516	114	171	84.8	127	338	508	323	486
M_p/Ω_b	$\phi_b M_p$, kip-ft	147	70.7	42.9	64.5	14.2	21.4	10.6	15.9	42.2	63.5	40.4	60.8
M_r/Ω_b	$\phi_b M_r$, kip-ft	27.7	41.6	25.8	38.7	8.04	12.1	5.77	8.68	24.5	36.9	23.8	35.7
BF/Ω_b	$\phi_b BF$, kips	1.29	1.93	1.28	1.93	1.75	2.65	1.95	2.91	0.967	1.45	0.982	1.49
V_n/Ω_v	$\phi_v V_n$, kips	49.1	73.9	37.5	56.4	22.0	33.0	19.7	29.5	52.4	78.7	46.6	70.0
Z_x, in.^{3}		26.2		23.9		7.92		5.90		23.5		22.5	
L_p, ft		4.13		4.15		1.52		1.09		4.20		4.20	
L_r, ft		19.2		17.5		5.03		3.57		22.5		21.1	

ASD	LRFD
Ω_b = 1.67	ϕ_b = 0.90
Ω_v = 1.67	ϕ_v = 0.90

Note: For beams laterally unsupported, see Table 3-11.
Available strength tabulated above heavy line is limited by available shear strength.

Table 3-9 (continued)
Maximum Total Uniform Load, kips
MC-Shapes

F_y = 36 ksi

MC8-MC7

Shape		MC8×										MC7×	
		22.8		21.4		20		18.7		8.5		22.7	
Design		ASD	LRFD	ASD	LRFD	ASD	LRFD	ASD	LRFD	ASD	LRFD	ASD	LRFD
Span, ft	2					82.8	124			37.0	55.7	91.1	137
	3	88.4	133	77.6	117	78.6	118	73.1	110	33.3	50.0	78.6	118
	4	68.6	103	65.4	98.3	58.9	88.6	56.0	84.2	25.0	37.5	58.9	88.6
	5	54.9	82.5	52.3	78.6	47.1	70.8	44.8	67.4	20.0	30.0	47.1	70.8
	6	45.7	68.8	43.6	65.5	39.3	59.0	37.4	56.2	16.6	25.0	39.3	59.0
	7	39.2	58.9	37.4	56.2	33.7	50.6	32.0	48.1	14.3	21.4	33.7	50.6
	8	34.3	51.6	32.7	49.1	29.5	44.3	28.0	42.1	12.5	18.8	29.5	44.3
	9	30.5	45.8	29.1	43.7	26.2	39.4	24.9	37.4	11.1	16.7	26.2	39.4
	10	27.4	41.3	26.2	39.3	23.6	35.4	22.4	33.7	9.99	15.0	23.6	35.4
	11	25.0	37.5	23.8	35.7	21.4	32.2	20.4	30.6	9.08	13.6	21.4	32.2
	12	22.9	34.4	21.8	32.8	19.6	29.5	18.7	28.1	8.32	12.5	19.6	29.5
	13	21.1	31.7	20.1	30.2	18.1	27.2	17.2	25.9	7.68	11.5	18.1	27.2
	14	19.6	29.5	18.7	28.1	16.8	25.3	16.0	24.1	7.13	10.7	16.8	25.3
	15	18.3	27.5	17.4	26.2	15.7	23.6	14.9	22.5	6.66	10.0	15.7	23.6
	16	17.2	25.8	16.3	24.6	14.7	22.1	14.0	21.1	6.24	9.38	14.7	22.1
	17	16.1	24.3	15.4	23.1	13.9	20.8	13.2	19.8	5.88	8.83	13.9	20.8
	18	15.2	22.9	14.5	21.8	13.1	19.7	12.5	18.7	5.55	8.34		
	19	14.4	21.7	13.8	20.7	12.4	18.6	11.8	17.7	5.26	7.90		
	20	13.7	20.6	13.1	19.7	11.8	17.7	11.2	16.8	4.99	7.51		
Beam Properties													
M_c/Ω_b	$\phi_b M_c$, kip-ft	274	413	262	393	236	354	224	337	99.9	150	236	354
M_p/Ω_b	$\phi_b M_p$, kip-ft	34.3	51.6	32.7	49.1	29.5	44.3	28.0	42.1	12.5	18.8	29.5	44.3
M_r/Ω_b	$\phi_b M_r$, kip-ft	20.0	30.1	19.4	29.1	17.1	25.7	16.5	24.8	7.32	11.0	17.0	25.5
BF/Ω_b	$\phi_b BF$, kips	0.724	1.09	0.733	1.10	0.775	1.16	0.778	1.17	0.970	1.46	0.493	0.741
V_n/Ω_v	$\phi_v V_n$, kips	44.2	66.4	38.8	58.3	41.4	62.2	36.5	54.9	18.5	27.8	45.5	68.4
Z_x, in.^{3}		19.1		18.2		16.4		15.6		6.95		16.4	
L_p, ft		4.25		4.25		3.61		3.61		2.08		4.33	
L_r, ft		24.0		22.4		19.6		18.4		7.42		29.7	

ASD	LRFD
Ω_b = 1.67	ϕ_b = 0.90
Ω_v = 1.67	ϕ_v = 0.90

Note: For beams laterally unsupported, see Table 3-11.
Available strength tabulated above heavy line is limited by available shear strength.

MC7-MC6

Table 3-9 (continued)
Maximum Total Uniform Load, kips
MC-Shapes

F_y = 36 ksi

Shape		MC7×		MC6×							
		19.1		18		15.3		16.3		15.1	
Design		ASD	LRFD	ASD	LRFD	ASD	LRFD	ASD	LRFD	ASD	LRFD
Span, ft	2			58.8	88.4	52.8	79.3	58.2	87.5	49.0	73.7
	3	63.7	95.8	56.0	84.2	47.5	71.4	49.8	74.9	47.1	70.8
	4	52.1	78.3	42.0	63.2	35.6	53.5	37.4	56.2	35.3	53.1
	5	41.7	62.6	33.6	50.5	28.5	42.8	29.9	44.9	28.3	42.5
	6	34.7	52.2	28.0	42.1	23.7	35.7	24.9	37.4	23.5	35.4
	7	29.8	44.7	24.0	36.1	20.3	30.6	21.4	32.1	20.2	30.3
	8	26.0	39.2	21.0	31.6	17.8	26.8	18.7	28.1	17.7	26.5
	9	23.2	34.8	18.7	28.1	15.8	23.8	16.6	25.0	15.7	23.6
	10	20.8	31.3	16.8	25.3	14.2	21.4	14.9	22.5	14.1	21.2
	11	18.9	28.5	15.3	23.0	12.9	19.5	13.6	20.4	12.8	19.3
	12	17.4	26.1	14.0	21.1	11.9	17.8	12.5	18.7	11.8	17.7
	13	16.0	24.1	12.9	19.4	11.0	16.5	11.5	17.3	10.9	16.3
	14	14.9	22.4	12.0	18.1	10.2	15.3	10.7	16.0	10.1	15.2
	15	13.9	20.9	11.2	16.8	9.49	14.3	9.96	15.0	9.42	14.2
	16	13.0	19.6								
	17	12.3	18.4								
Beam Properties											
M_n/Ω_b	$\phi_b M_n$, kip-ft	208	313	168	253	142	214	149	225	141	212
M_p/Ω_b	$\phi_b M_p$, kip-ft	26.0	39.2	21.0	31.6	17.8	26.8	18.7	28.1	17.7	26.5
M_r/Ω_b	$\phi_b M_r$, kip-ft	15.5	23.2	12.4	18.7	10.6	16.0	10.9	16.4	10.4	15.7
BF/Ω_b	$\phi_b BF$, kips	0.523	0.797	0.356	0.535	0.372	0.559	0.373	0.560	0.384	0.568
V_n/Ω_v	$\phi_v V_n$, kips	31.9	47.9	29.4	44.2	26.4	39.7	29.1	43.7	24.5	36.9
Z_x, in.^{3}		14.5		11.7		9.91		10.4		9.63	
L_p, ft		4.33		4.37		4.37		3.69		3.68	
L_r, ft		24.4		28.5		23.7		24.6		22.7	

ASD	LRFD
Ω_b = 1.67	ϕ_b = 0.90
Ω_v = 1.67	ϕ_v = 0.90

Note: For beams laterally unsupported, see Table 3-11.
Available strength tabulated above heavy line is limited by available shear strength.

F_y = 36 ksi

Table 3-9 (continued)
Maximum Total Uniform Load, kips
MC-Shapes

MC6-MC3

Shape		MC6×						MC4×		MC3×	
		12		7		6.5		13.8		7.1	
Design		ASD	LRFD	ASD	LRFD	ASD	LRFD	ASD	LRFD	ASD	LRFD
Span, ft	2	48.1	72.3	27.8	41.8	24.1	36.2	39.7	59.7	16.1	24.2
	3	35.8	53.8	21.6	32.4	20.5	30.8	26.5	39.8	10.7	16.1
	4	26.8	40.3	16.2	24.3	15.4	23.1	19.9	29.9	8.05	12.1
	5	21.5	32.3	12.9	19.4	12.3	18.5	15.9	23.9	6.44	9.68
	6	17.9	26.9	10.8	16.2	10.3	15.4	13.2	19.9	5.37	8.06
	7	15.3	23.1	9.24	13.9	8.79	13.2	11.4	17.1	4.60	6.91
	8	13.4	20.2	8.08	12.2	7.69	11.6	9.93	14.9		
	9	11.9	17.9	7.19	10.8	6.83	10.3	8.83	13.3		
	10	10.7	16.1	6.47	9.72	6.15	9.24	7.95	11.9		
	11	9.76	14.7	5.88	8.84	5.59	8.40				
	12	8.95	13.4	5.39	8.10	5.13	7.70				
	13	8.26	12.4	4.97	7.48	4.73	7.11				
	14	7.67	11.5	4.62	6.94	4.39	6.60				
	15	7.16	10.8	4.31	6.48	4.10	6.16				
Beam Properties											
M_c/Ω_b	$\phi_b M_c$, kip-ft	107	161	64.7	97.2	61.5	92.4	79.5	119	32.2	48.4
M_p/Ω_b	$\phi_b M_p$, kip-ft	13.4	20.2	8.08	12.2	7.69	11.6	9.93	14.9	4.02	6.05
M_r/Ω_b	$\phi_b M_r$, kip-ft	7.85	11.8	4.79	7.20	4.60	6.92	5.57	8.37	2.28	3.42
BF/Ω_b	$\phi_b BF$, kips	0.414	0.627	0.490	0.744	0.485	0.735	0.126	0.189	0.0745	0.113
V_n/Ω_v	$\phi_v V_n$, kips	24.1	36.2	13.9	20.9	12.0	18.1	25.9	38.9	12.1	18.2
Z_x, in.^{3}		7.47		4.50		4.28		5.53		2.24	
L_p, ft		3.01		2.24		2.24		3.03		2.34	
L_r, ft		16.4		8.96		8.61		37.6		25.7	

ASD	LRFD
Ω_b = 1.67	ϕ_b = 0.90
Ω_v = 1.67	ϕ_v = 0.90

Note: For beams laterally unsupported, see Table 3-11.
Available strength tabulated above heavy line is limited by available shear strength.

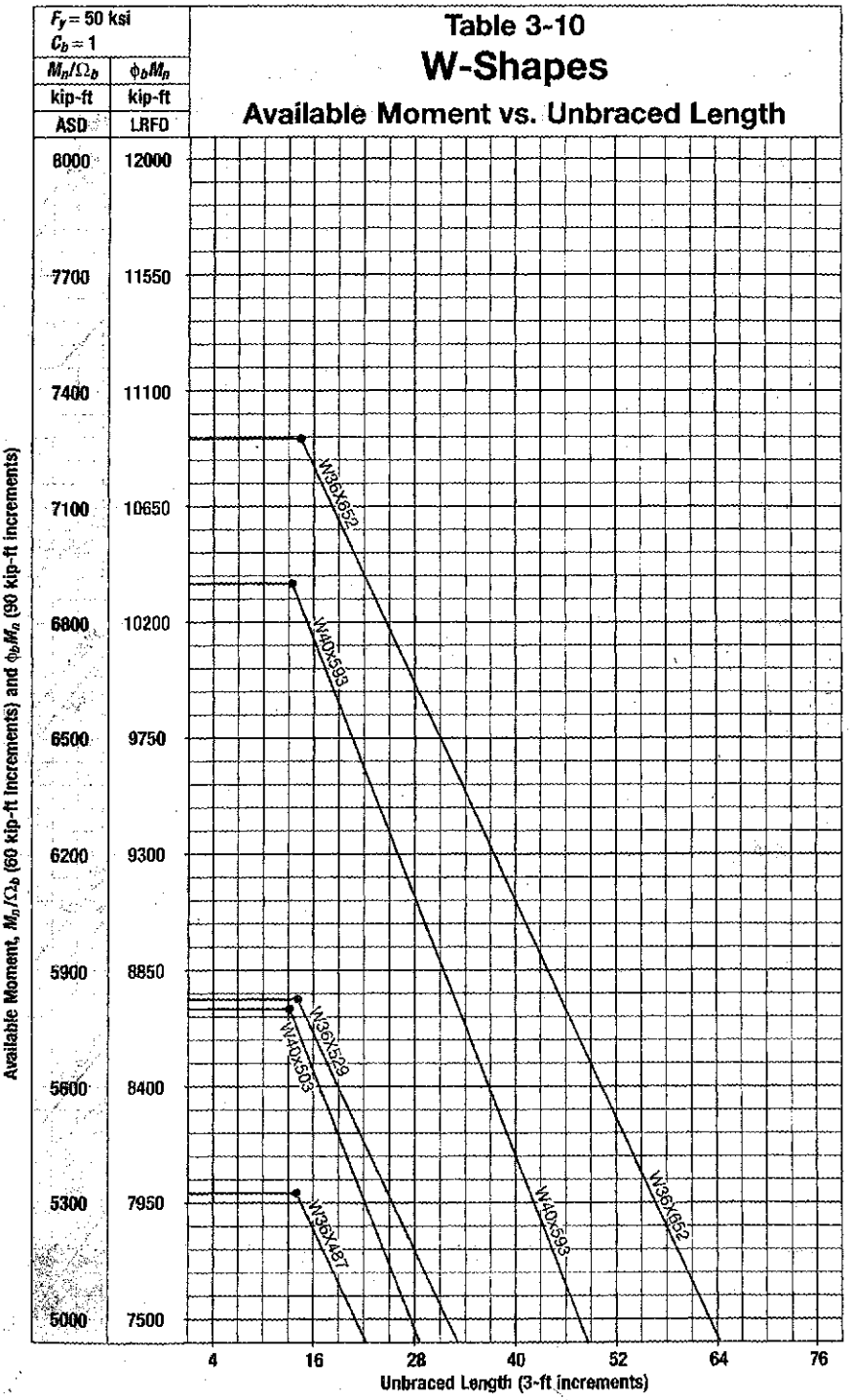
F_y = 50 ksi
C_b = 1
M_n/Ω_b
kip-ft
ASD
$\phi_b M_n$
kip-ft
LRFD
Table 3-10
W-Shapes
Available Moment vs. Unbraced Length
8000
12000
7700
11550
7400
11100
7100
10650
6800
10200
6500
9750
6200
9300
5900
8850
5600
8400
5300
7950
5000
7500
W36X652
W40X593
W36X529
W40X503
W36X487
4
16
28
40
52
64
76
Unbraced Length (3-ft increments)
Available Moment, M_n/Ω_b (60 kip-ft increments) and $\phi_b M_n$ (90 kip-ft increments)

Table 3-10 (continued)

W-Shapes

Available Moment vs. Unbraced Length

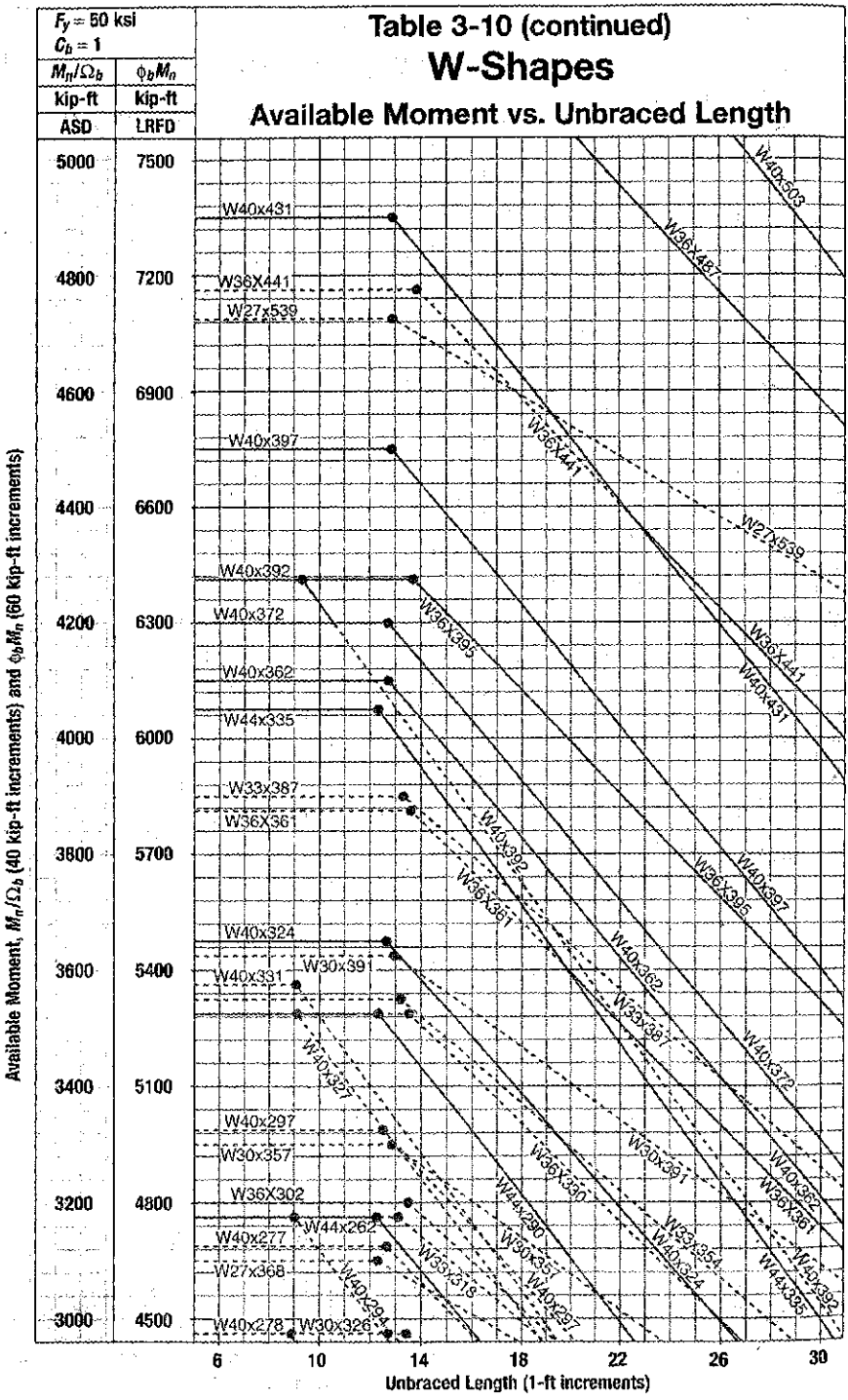

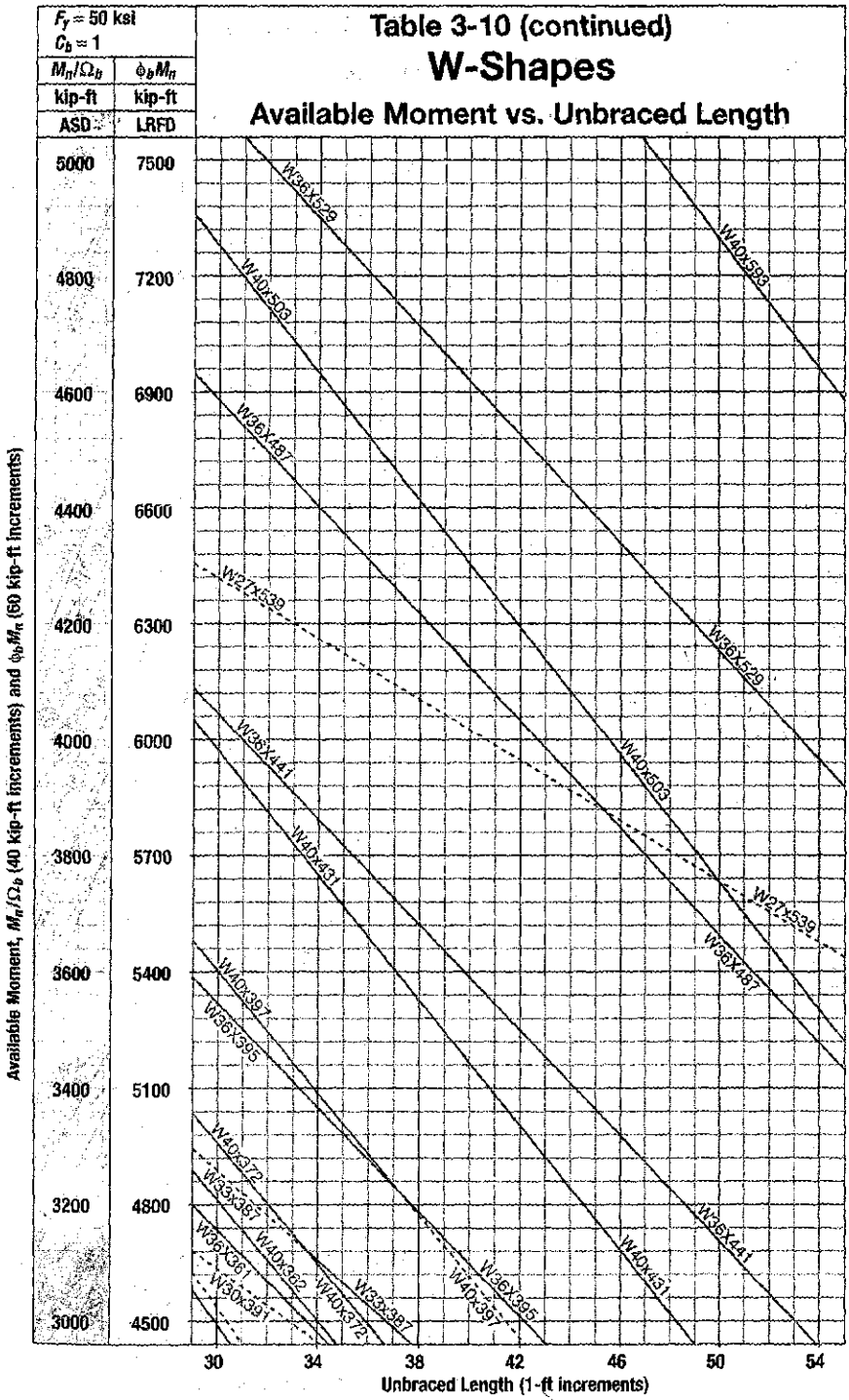
Table 3-10 (continued)
W-Shapes
Available Moment vs. Unbraced Length
$F_y = 50$ ksi
$C_b = 1$
M_n/Ω_b kip-ft ASD
$\phi_b M_n$ kip-ft LRFD
5000 7500
4800 7200
4600 6900
4400 6600
4200 6300
4000 6000
3800 5700
3600 5400
3400 5100
3200 4800
3000 4500
Available Moment, M_n/Ω_b (40 kip-ft increments) and $\phi_b M_n$ (60 kip-ft increments)
30 34 38 42 46 50 54
Unbraced Length (1-ft increments)
W36X529
W40X593
W40X503
W36X487
W27X539
W36X441
W40X431
W40X397
W36X395
W40X372
W33X387
W36X361
W40X362
W30X391

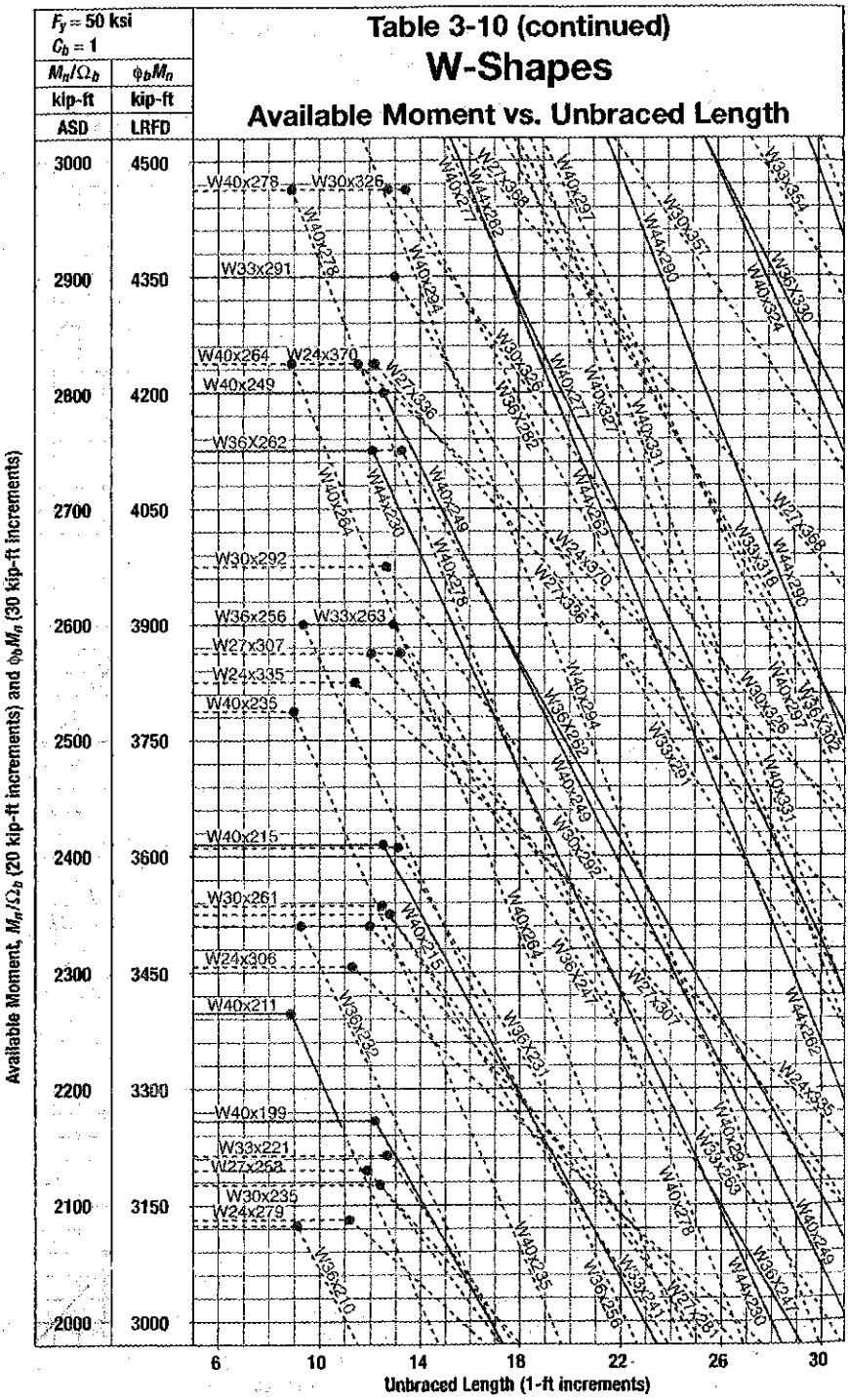
Table 3-10 (continued)
W-Shapes
Available Moment vs. Unbraced Length
F_y = 50 ksi
C_b = 1
M_n/Ω_b kip-ft ASD
$\phi_b M_n$ kip-ft LRFD
3000 4500
2900 4350
2800 4200
2700 4050
2600 3900
2500 3750
2400 3600
2300 3450
2200 3300
2100 3150
2000 3000
Available Moment, M_n/Ω_b (20 kip-ft increments) and $\phi_b M_n$ (30 kip-ft increments)
6 10 14 18 22 26 30
Unbraced Length (1-ft increments)
W40x278
W30x326
W33x291
W40x264
W24x370
W40x249
W36x262
W36x256
W33x263
W27x307
W24x335
W40x235
W40x215
W30x261
W24x306
W40x211
W40x199
W33x221
W27x258
W30x235
W24x279
W36x210

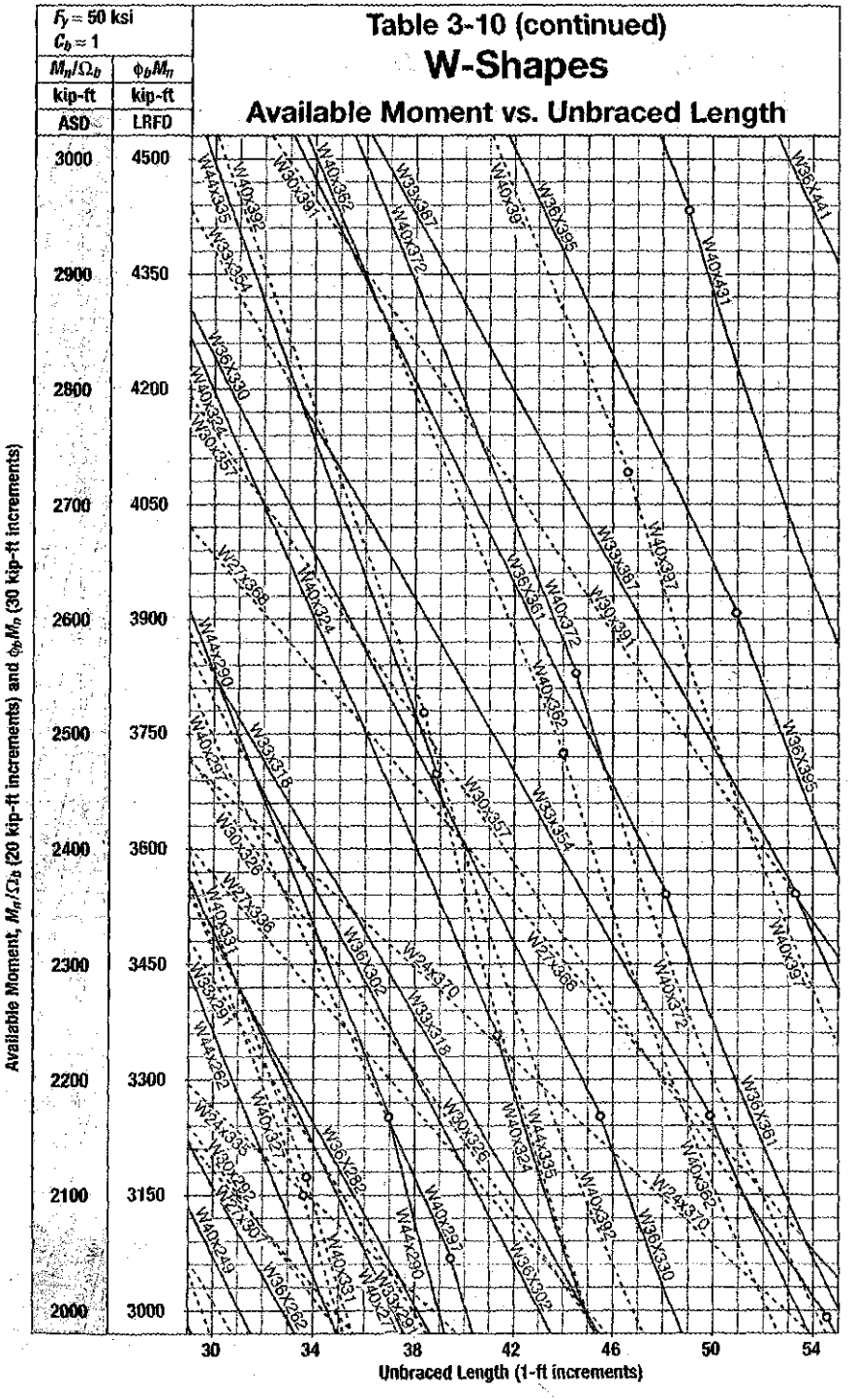
Table 3-10 (continued)
W-Shapes
Available Moment vs. Unbraced Length
F_y = 50 ksi
C_b = 1
M_n/Ω_b kip-ft ASD
$\phi_b M_n$ kip-ft LRFD
3000 4500
2900 4350
2800 4200
2700 4050
2600 3900
2500 3750
2400 3600
2300 3450
2200 3300
2100 3150
2000 3000
Available Moment, M_n/Ω_b (20 kip-ft increments) and $\phi_b M_n$ (30 kip-ft increments)
30 34 38 42 46 50 54
Unbraced Length (1-ft increments)

Table 3-10 (continued)

W-Shapes

Available Moment vs. Unbraced Length

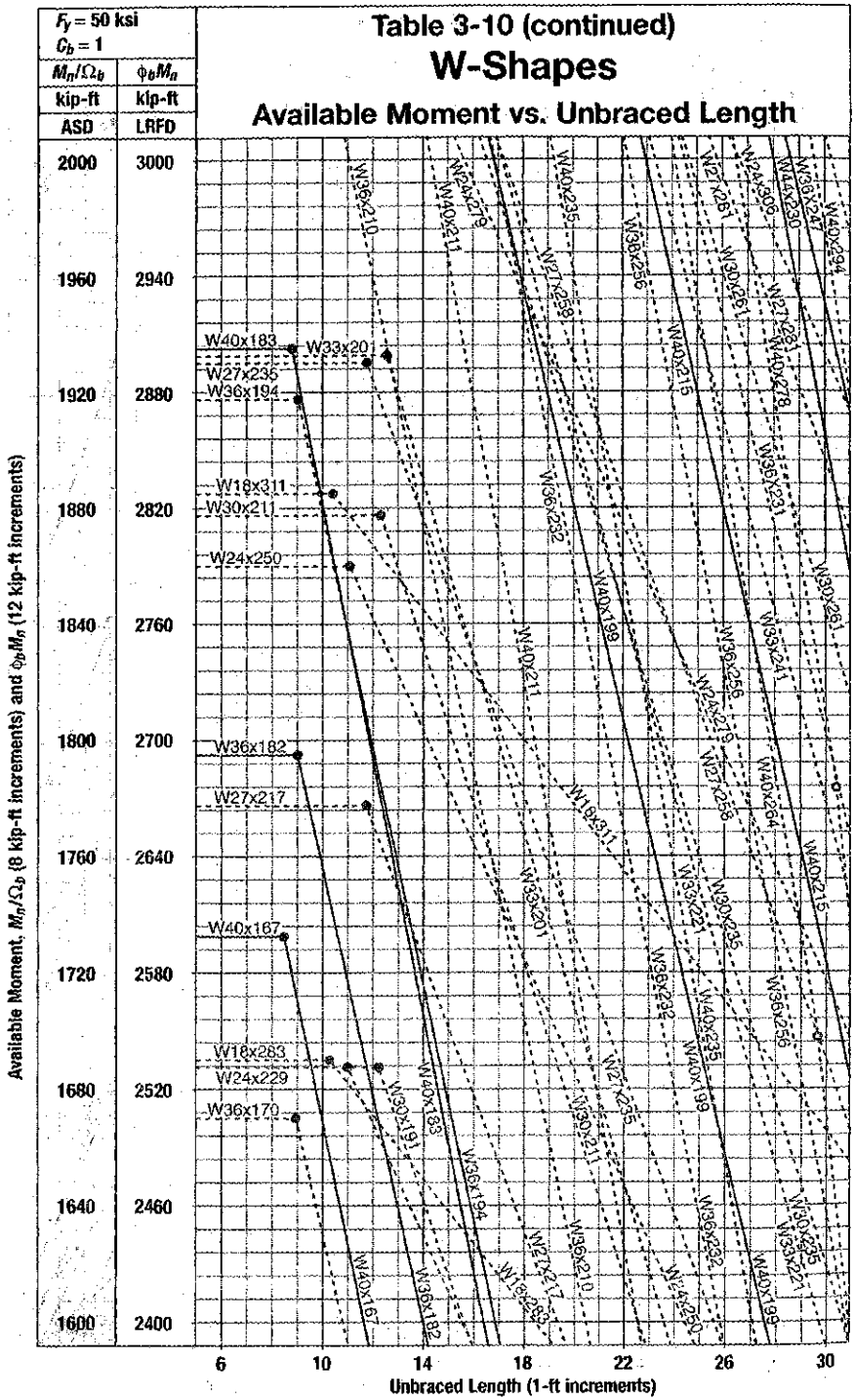

Table 3-10 (continued)

W-Shapes

Available Moment vs. Unbraced Length

$F_y = 50$ ksi
$C_b = 1$

M_n/Ω_b kip-ft ASD	$\phi_b M_n$ kip-ft LRFD
2000	3000
1960	2940
1920	2880
1880	2820
1840	2760
1800	2700
1760	2640
1720	2580
1680	2520
1640	2460
1600	2400

Available Moment, M_n/Ω_b (8 kip-ft increments) and $\phi_b M_n$ (12 kip-ft increments)

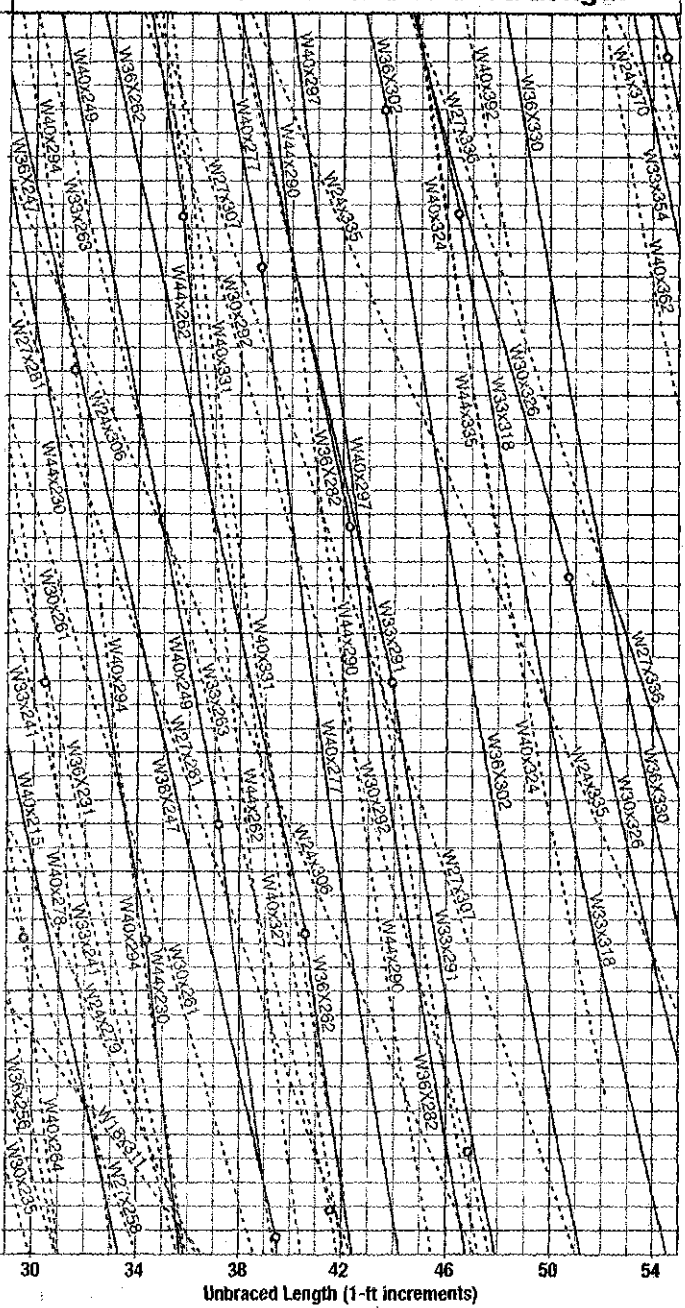

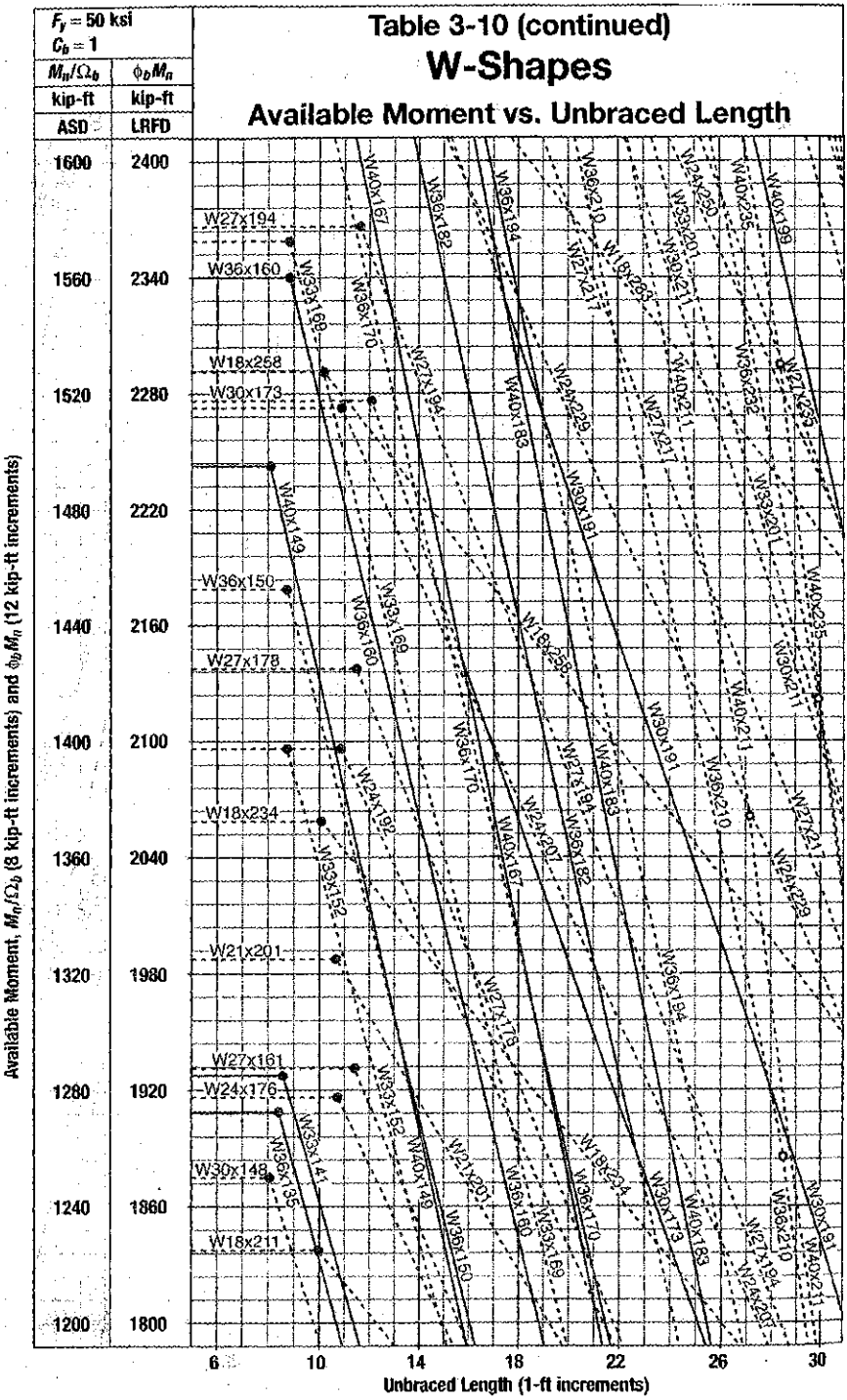
$F_y = 50$ ksi
$C_b = 1$
M_n/Ω_b kip-ft ASD
$\phi_b M_n$ kip-ft LRFD
Table 3-10 (continued)
W-Shapes
Available Moment vs. Unbraced Length
Available Moment, M_n/Ω_b (8 kip-ft increments) and $\phi_b M_n$ (12 kip-ft increments)
1600 2400
1560 2340
1520 2280
1480 2220
1440 2160
1400 2100
1360 2040
1320 1980
1280 1920
1240 1860
1200 1800
6 10 14 18 22 26 30
Unbraced Length (1-ft increments)
W27x194
W36x160
W18x258
W30x173
W40x149
W36x150
W27x178
W18x234
W21x201
W27x161
W24x176
W30x148
W18x211
W40x167
W33x169
W36x170
W27x194
W40x183
W33x182
W36x194
W24x192
W33x150
W33x152
W36x135
W33x141
W36x160
W24x229
W30x191
W36x182
W24x207
W40x211
W36x252
W40x235
W40x199
W36x210
W27x217
W30x211
W33x201
W40x215
W27x235
W40x225
W24x201
W36x180
W33x169
W36x150
W40x149
W21x201
W27x178
W36x194
W18x234
W30x173
W40x183
W24x229
W30x191
W40x211
W27x217
W24x207

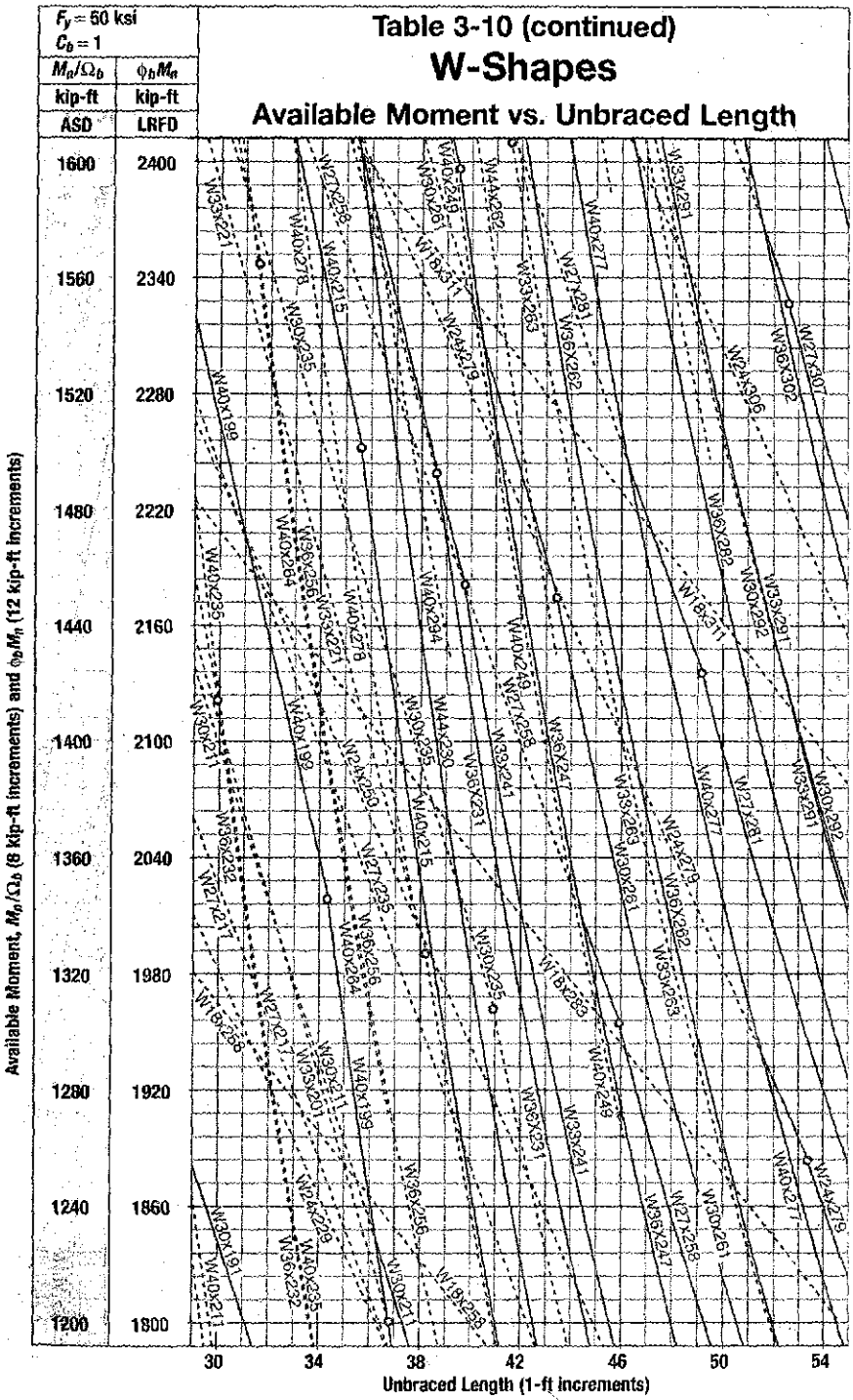
F_y = 50 ksi
C_b = 1
M_n/Ω_b kip-ft ASD
$\phi_b M_n$ kip-ft LRFD
Table 3-10 (continued)
W-Shapes
Available Moment vs. Unbraced Length
Available Moment, M_n/Ω_b (8 kip-ft increments) and $\phi_b M_n$ (12 kip-ft increments)
1600 2400
1560 2340
1520 2280
1480 2220
1440 2160
1400 2100
1360 2040
1320 1980
1280 1920
1240 1860
1200 1800
30 34 38 42 46 50 54
Unbraced Length (1-ft increments)

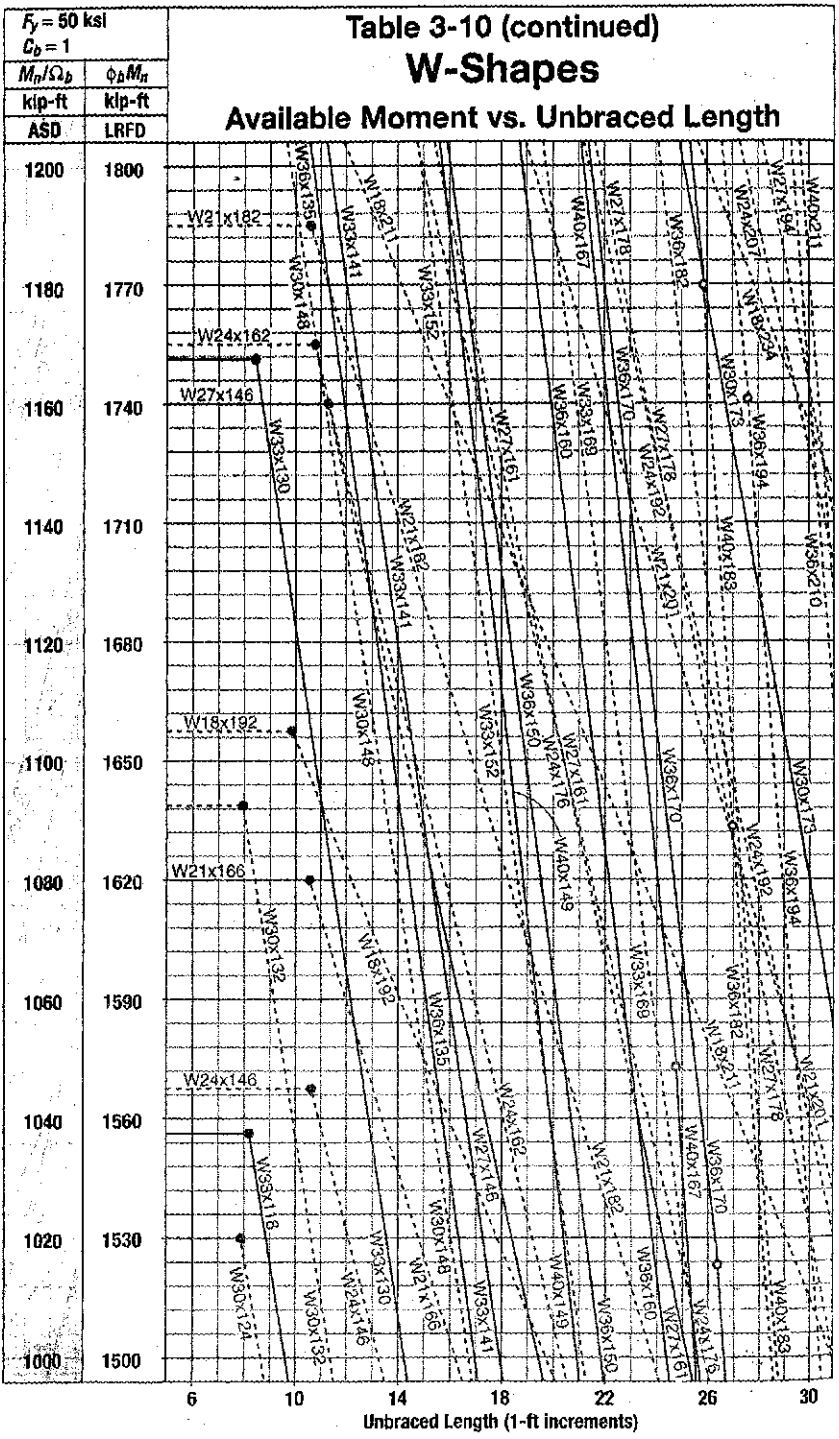
Table 3-10 (continued)
W-Shapes
Available Moment vs. Unbraced Length
F_y = 50 ksi
C_b = 1
M_n/Ω_b kip-ft ASD
$\phi_b M_n$ kip-ft LRFD
1200 1800
1180 1770
1160 1740
1140 1710
1120 1680
1100 1650
1080 1620
1060 1590
1040 1560
1020 1530
1000 1500
Available Moment, M_n/Ω_b (4 kip-ft increments) and $\phi_b M_n$ (6 kip-ft increments)
6 10 14 18 22 26 30
Unbraced Length (1-ft increments)
W21x182
W24x162
W27x146
W18x192
W21x166
W24x146
W36x135
W30x148
W33x141
W18x211
W33x152
W40x167
W21x179
W36x182
W24x207
W27x194
W40x211
W30x173
W36x194
W36x170
W33x169
W27x178
W24x192
W21x201
W40x183
W36x210
W30x132
W30x124
W33x118
W24x176
W40x149
W33x130
W24x146
W21x166
W27x146
W30x148
W33x141
W36x150
W27x161
W33x152
W24x162
W21x182
W40x149
W33x169
W36x160
W27x161
W24x176
W36x135
W30x132
W18x192
W30x135
W33x141
W21x182
W24x162
W27x146
W40x167
W36x150
W33x152
W21x166
W36x170
W30x173
W36x194
W24x192
W21x201
W27x178
W36x182
W18x211
W40x183
W24x176
W36x160
W27x161
W33x130
W24x146
W30x132
W33x118
W30x124
W21x166
W30x148
W33x141
W40x149
W36x150
W33x152
W24x162
W27x146
W40x167
W21x182
W36x170
W33x169
W36x135
W30x132
W18x192
W30x135
W33x141
W21x182
W24x162
W27x146
W40x167
W36x150
W33x152
W21x166
W36x170
W30x173
W36x194
W24x192
W21x201
W27x178
W36x182
W18x211
W40x183
W24x176
W36x160
W27x161
W33x130
W24x146
W30x132
W33x118
W30x124

Table 3-10 (continued)

W-Shapes

Available Moment vs. Unbraced Length

$F_y = 50$ ksi
$C_b = 1$

M_n/Ω_b kip-ft ASD	$\phi_b M_n$ kip-ft LRFD
1200	1800
1180	1770
1160	1740
1140	1710
1120	1680
1100	1650
1080	1620
1060	1590
1040	1560
1020	1530
1000	1500

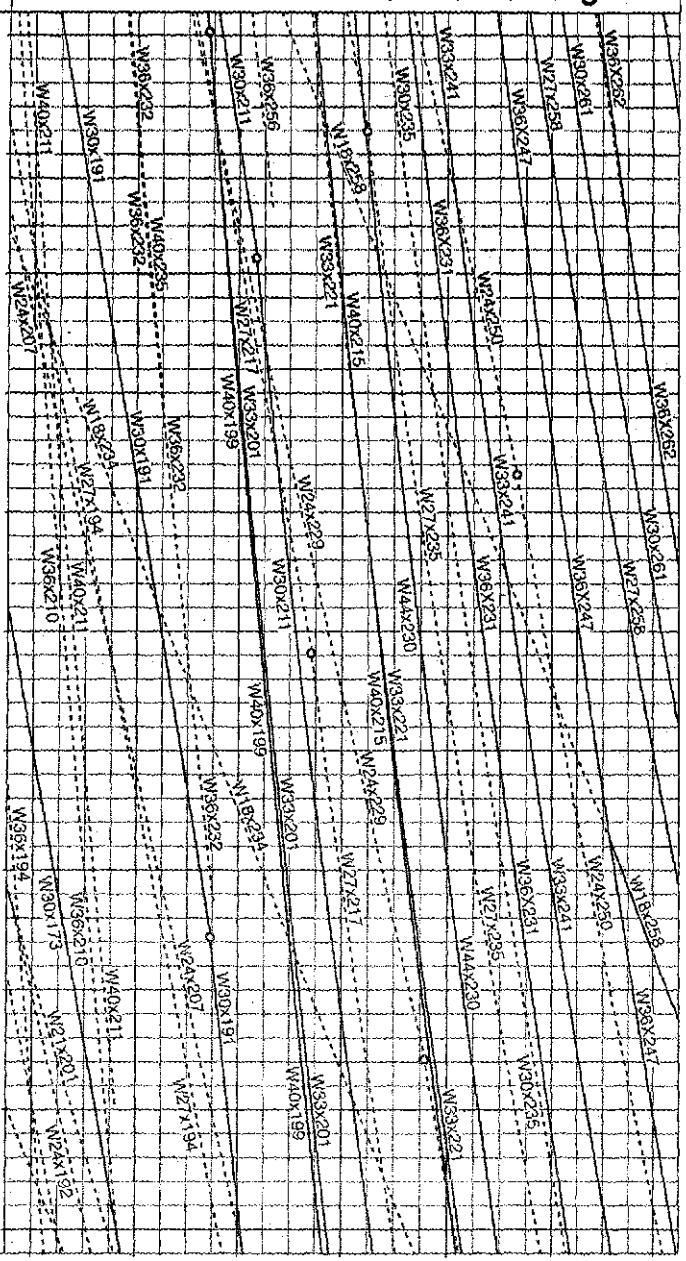

Table 3-10 (continued)
W-Shapes
Available Moment vs. Unbraced Length

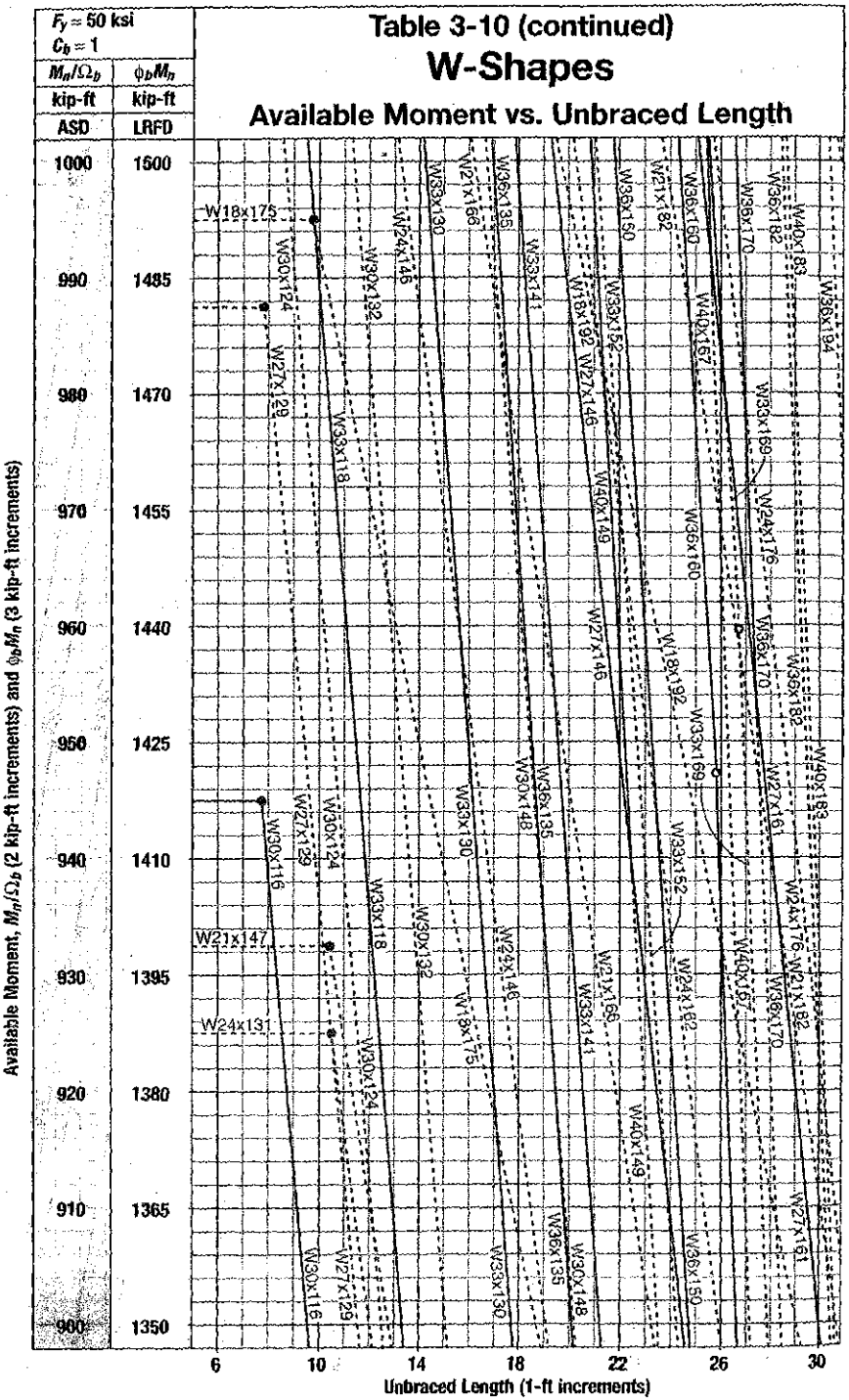

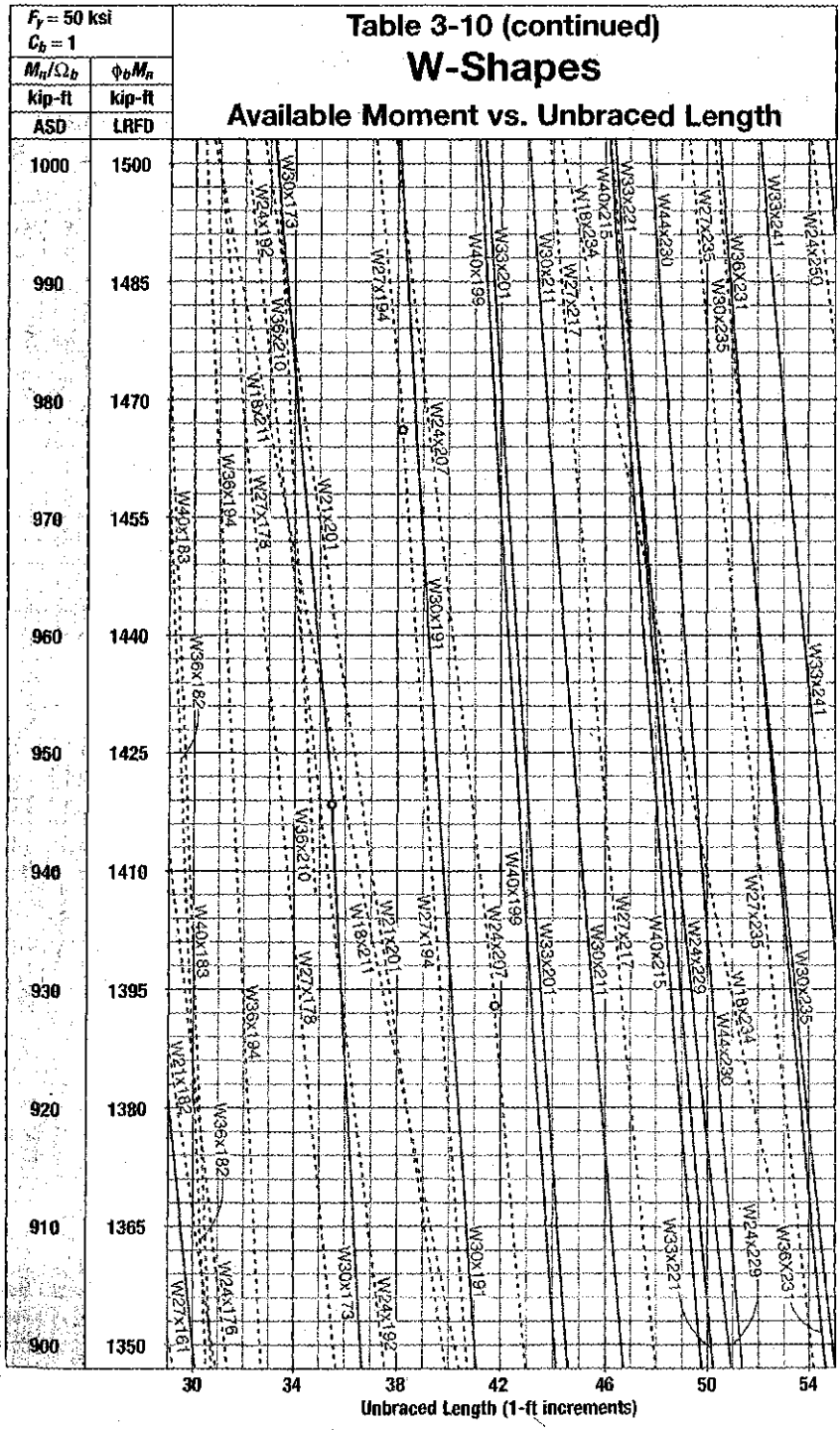
F_y = 50 ksi
C_b = 1
M_n/Ω_b
kip-ft
ASD
$\phi_b M_n$
kip-ft
LRFD
Table 3-10 (continued)
W-Shapes
Available Moment vs. Unbraced Length
Available Moment, M_n/Ω_b (2 kip-ft increments) and $\phi_b M_n$ (3 kip-ft increments)
1000 1500
990 1485
980 1470
970 1455
960 1440
950 1425
940 1410
930 1395
920 1380
910 1365
900 1350
30 34 38 42 46 50 54
Unbraced Length (1-ft increments)
W30x173
W24x192
W36x210
W18x211
W27x178
W21x201
W27x194
W24x207
W40x199
W33x201
W30x211
W27x217
W18x234
W40x215
W33x221
W44x230
W27x235
W30x235
W36x231
W33x241
W24x250
W40x183
W36x194
W36x182
W21x182
W27x161
W24x176
W30x191
W24x229
W36X231

Table 3-10 (continued)
W-Shapes
Available Moment vs. Unbraced Length

$F_y = 50$ ksi
$C_b = 1$

M_n/Ω_b kip-ft ASD	$\phi_b M_n$ kip-ft LRFD
900	1350
890	1335
880	1320
870	1305
860	1290
850	1275
840	1260
830	1245
820	1230
810	1215
800	1200

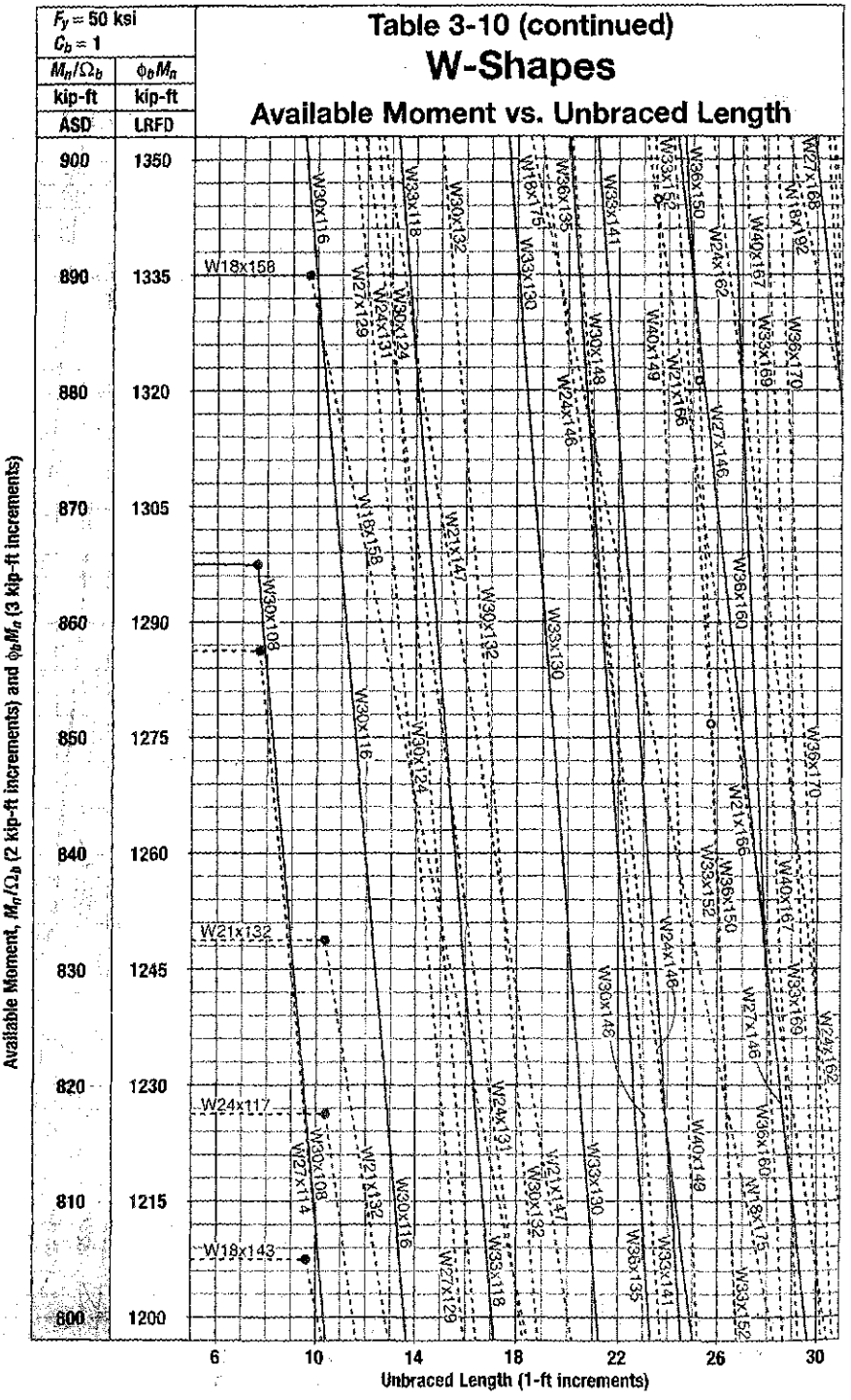

Table 3-10 (continued)

W-Shapes

Available Moment vs. Unbraced Length

$F_y = 50$ ksi
$C_b = 1$

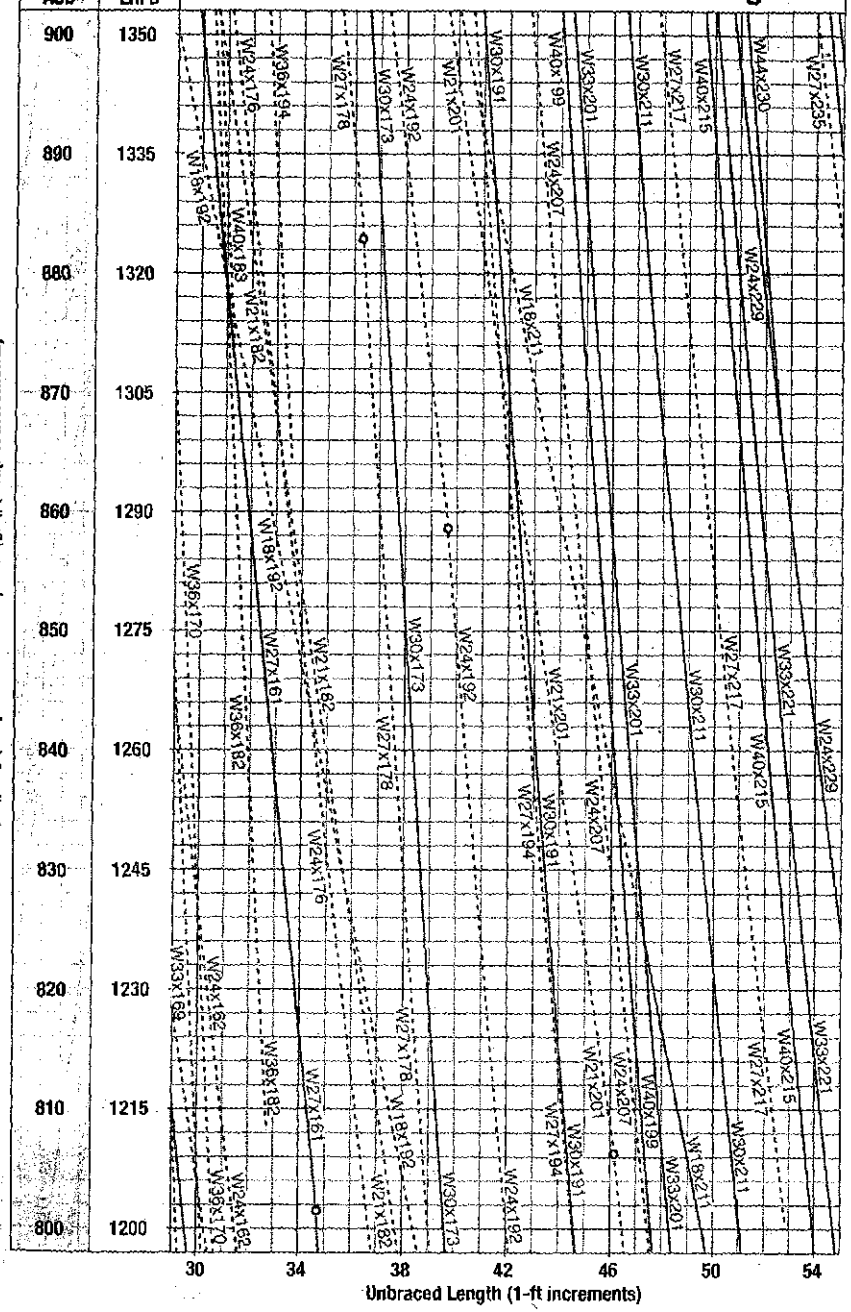

Table 3-10 (continued)

W-Shapes

Available Moment vs. Unbraced Length

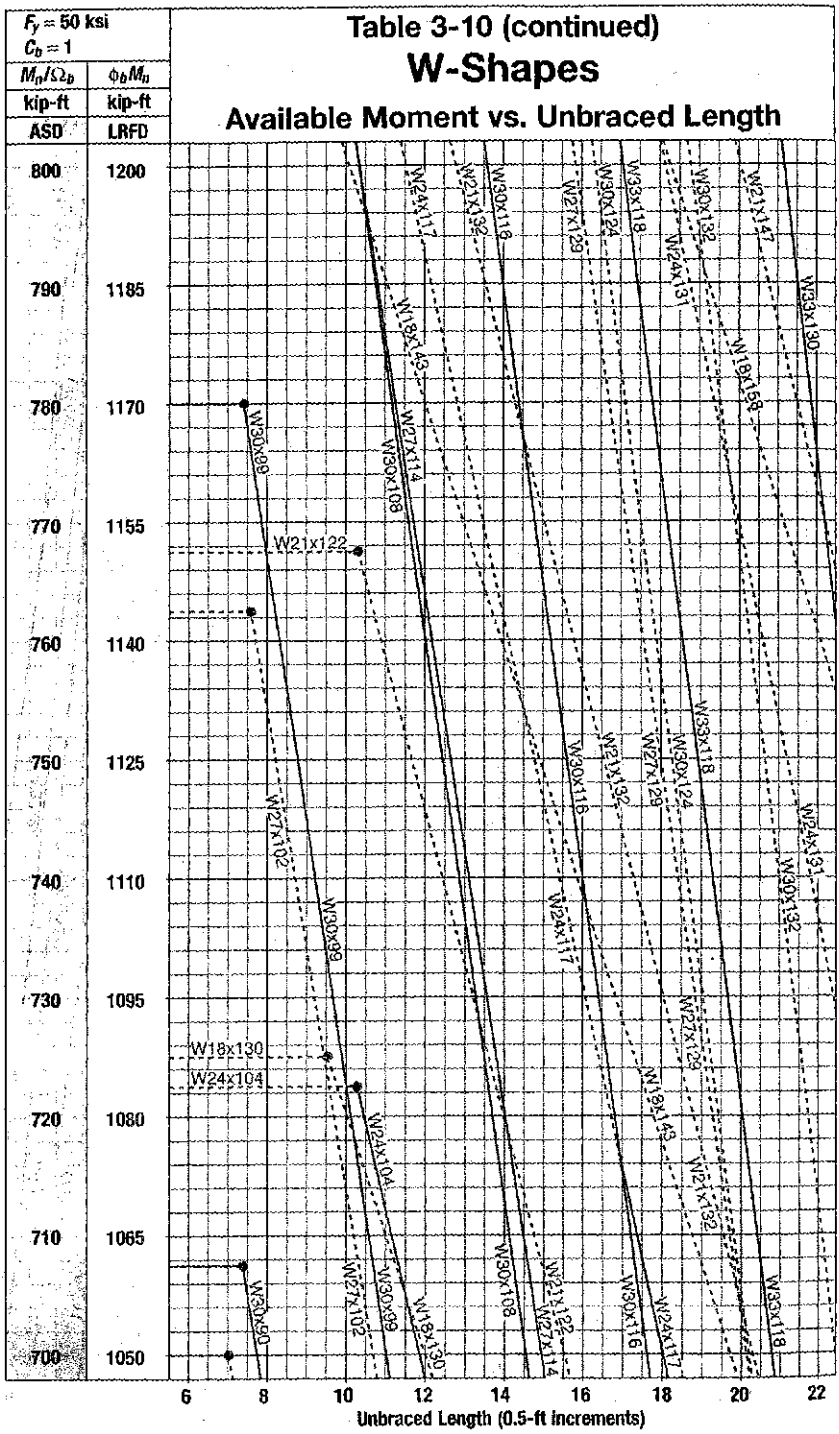

Table 3-10 (continued)

W-Shapes

Available Moment vs. Unbraced Length

$F_y = 50$ ksi
$C_b = 1$

M_n/Ω_b kip-ft ASD	$\phi_b M_n$ kip-ft LRFD
800	1200
790	1185
780	1170
770	1155
760	1140
750	1125
740	1110
730	1095
720	1080
710	1065
700	1050

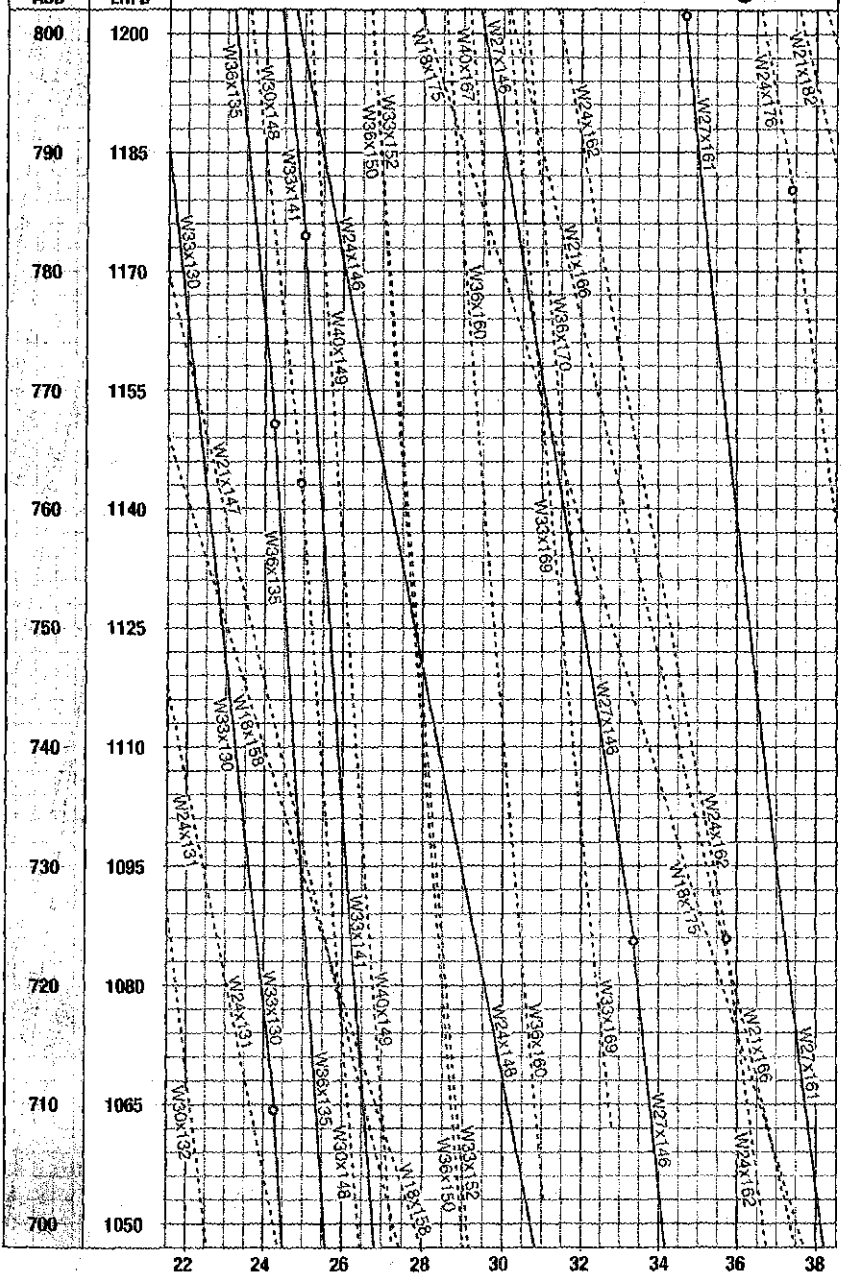

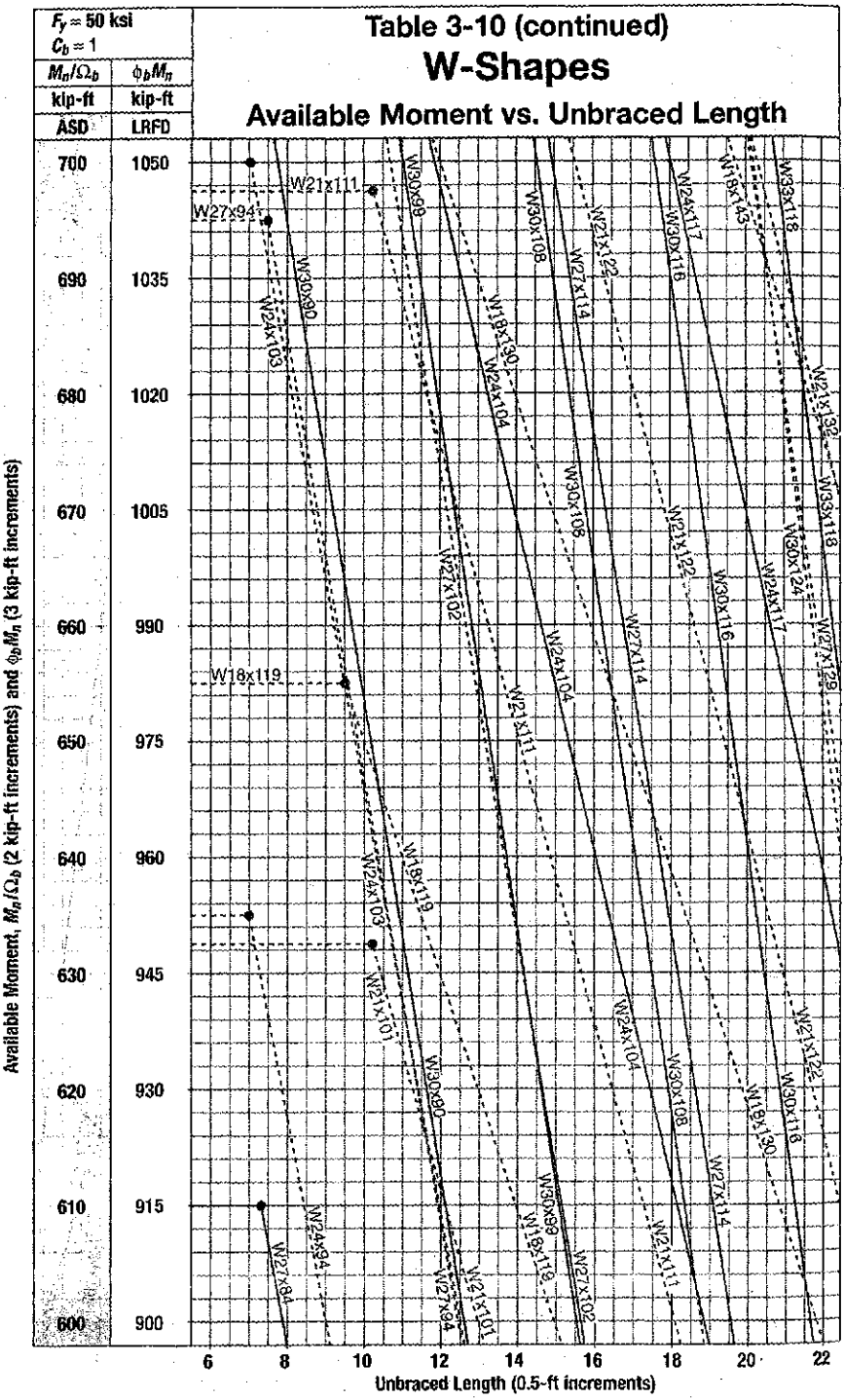
Table 3-10 (continued)
W-Shapes
Available Moment vs. Unbraced Length
F_y = 50 ksi
C_b = 1
M_n/Ω_b kip-ft ASD
$\phi_b M_n$ kip-ft LRFD
700 1050
690 1035
680 1020
670 1005
660 990
650 975
640 960
630 945
620 930
610 915
600 900
Available Moment, M_n/Ω_b (2 kip-ft increments) and $\phi_b M_n$ (3 kip-ft increments)
6 8 10 12 14 16 18 20 22
Unbraced Length (0.5-ft increments)
W21x111
W27x94
W18x119
W30x99
W30x90
W24x103
W30x108
W21x122
W27x114
W18x130
W24x104
W24x117
W30x116
W18x143
W33x118
W21x132
W30x124
W27x129
W27x102
W21x101
W30x80
W24x94
W27x84

Table 3-10 (continued)

W-Shapes

Available Moment vs. Unbraced Length

$F_y = 50$ ksi
$C_b = 1$

M_n/Ω_b kip-ft ASD	$\phi_b M_n$ kip-ft LRFD
700	1050
690	1035
680	1020
670	1005
660	990
650	975
640	960
630	945
620	930
610	915
600	900

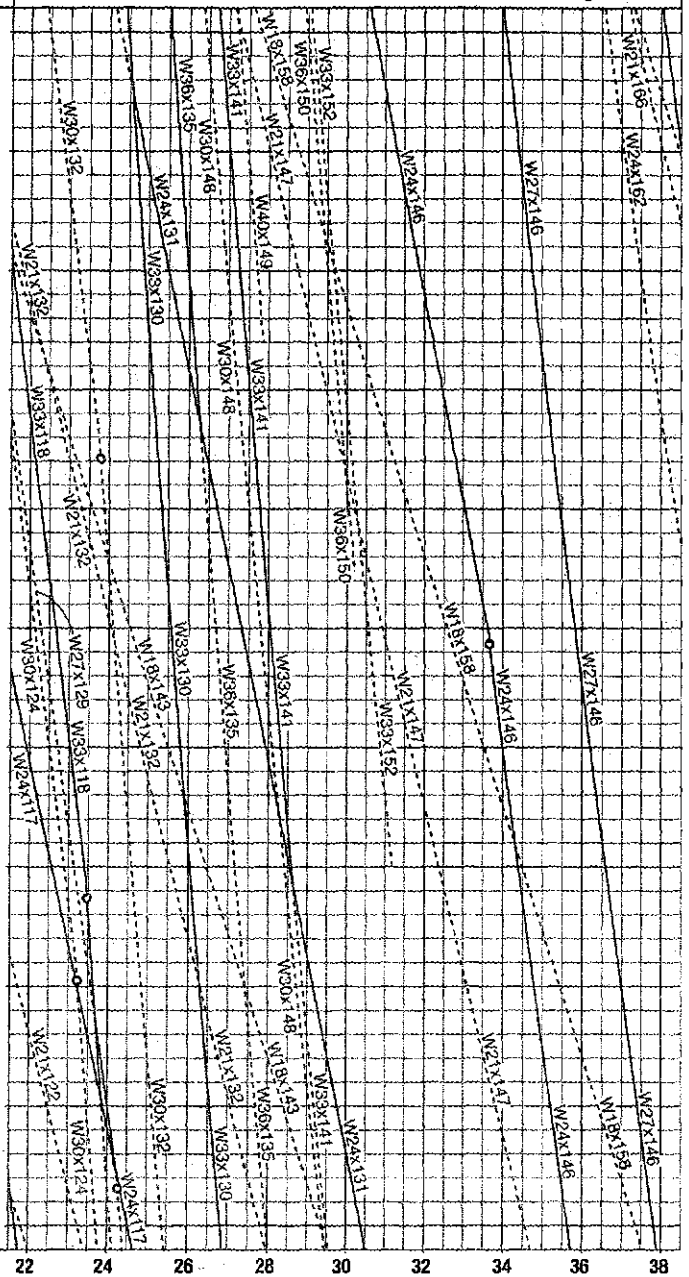

Available Moment, M_n/Ω_b (2 kip-ft increments) and $\phi_b M_n$ (3 kip-ft increments)

Unbraced Length (0.5-ft increments)

Table 3-10 (continued)
W-Shapes
Available Moment vs. Unbraced Length

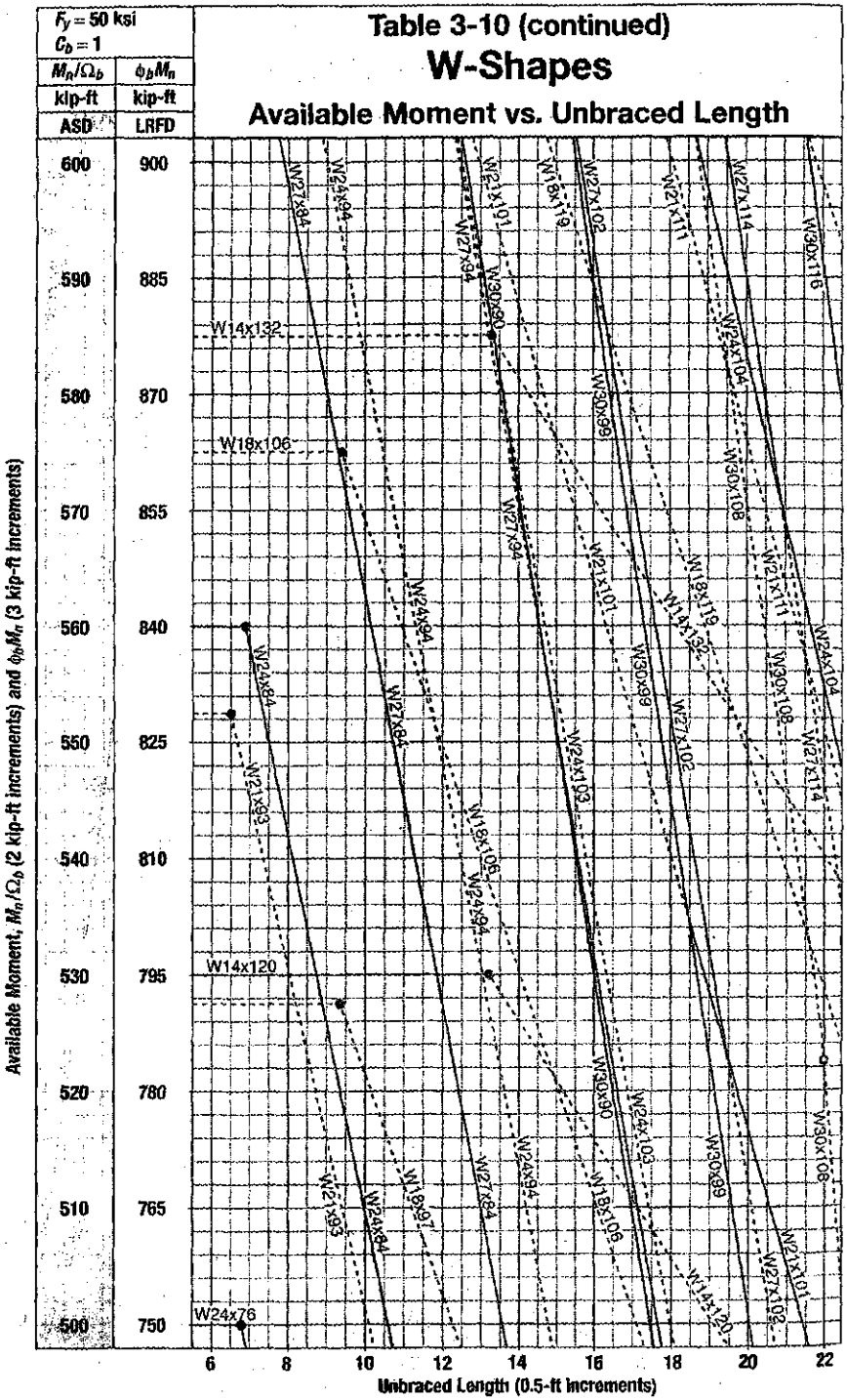

Table 3-10 (continued)
W-Shapes
Available Moment vs. Unbraced Length

$F_y = 50$ ksi
$C_b = 1$

M_n/Ω_b kip-ft ASD	$\phi_b M_n$ kip-ft LRFD
600	900
590	885
580	870
570	855
560	840
550	825
540	810
530	795
520	780
510	765
500	750

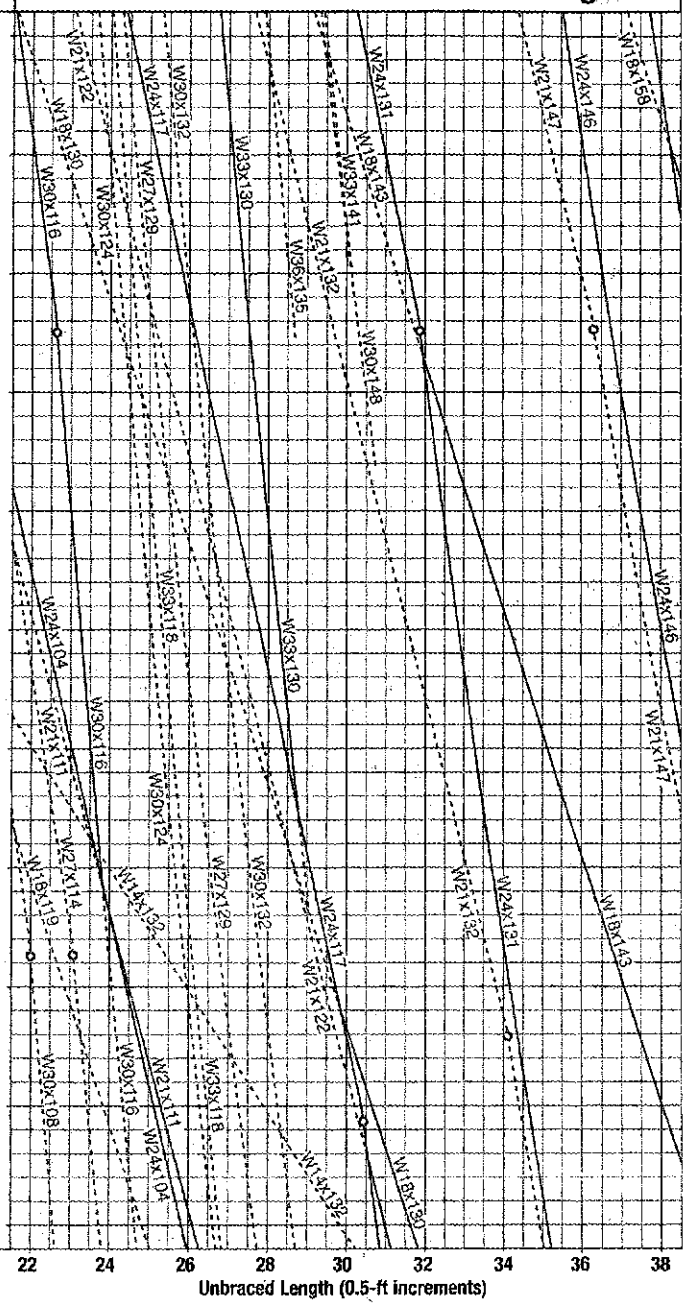

Available Moment, M_n/Ω_b (2 kip-ft increments) and $\phi_b M_n$ (3 kip-ft increments)

22 24 26 28 30 32 34 36 38

Unbraced Length (0.5-ft increments)

Table 3-10 (continued)
W-Shapes
Available Moment vs. Unbraced Length

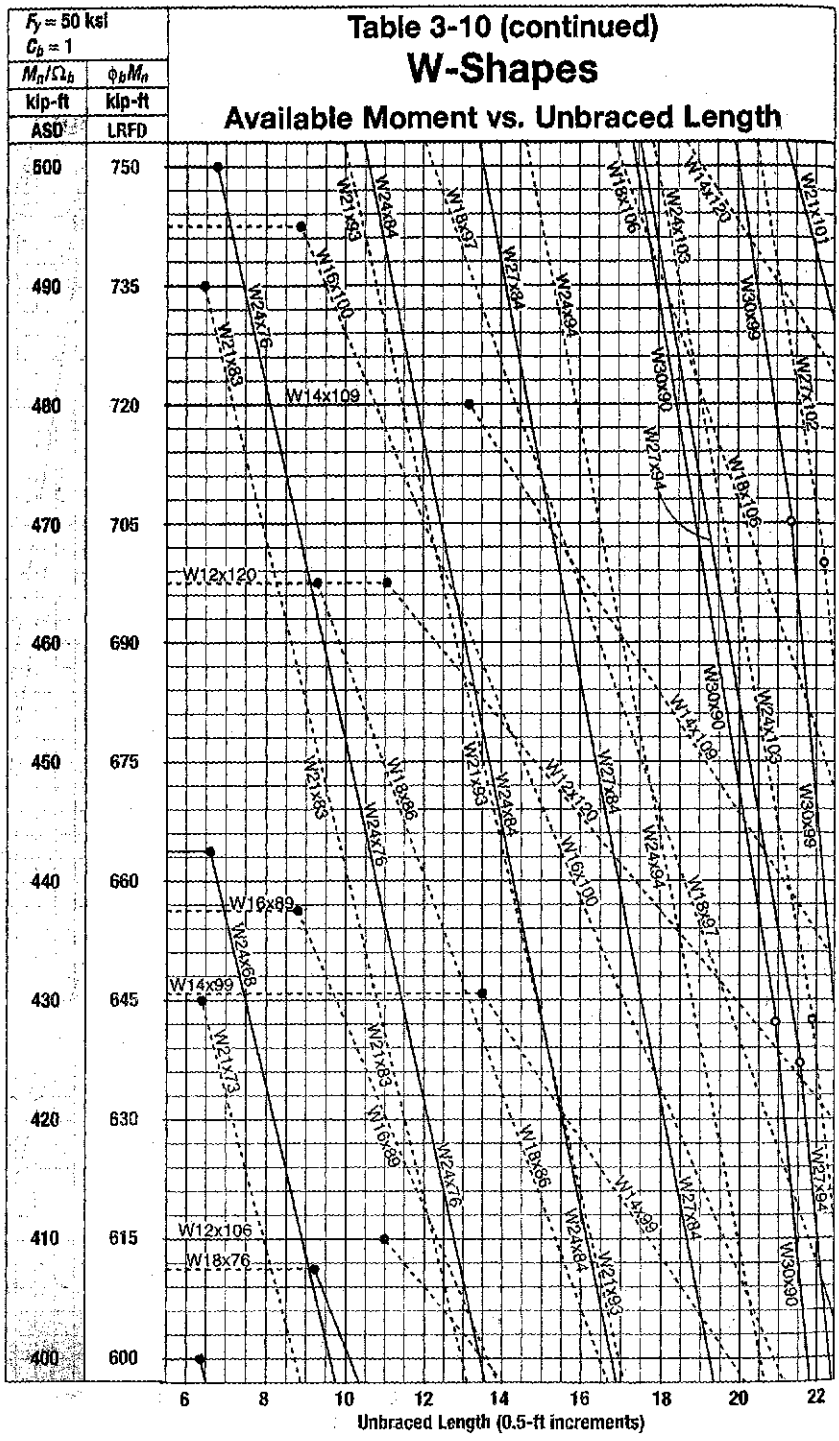

$F_y = 50$ ksi
$C_b = 1$

Table 3-10 (continued)

W-Shapes

Available Moment vs. Unbraced Length

M_n/Ω_b kip-ft ASD	$\phi_b M_n$ kip-ft LRFD
500	750
490	735
480	720
470	705
460	690
450	675
440	660
430	645
420	630
410	615
400	600

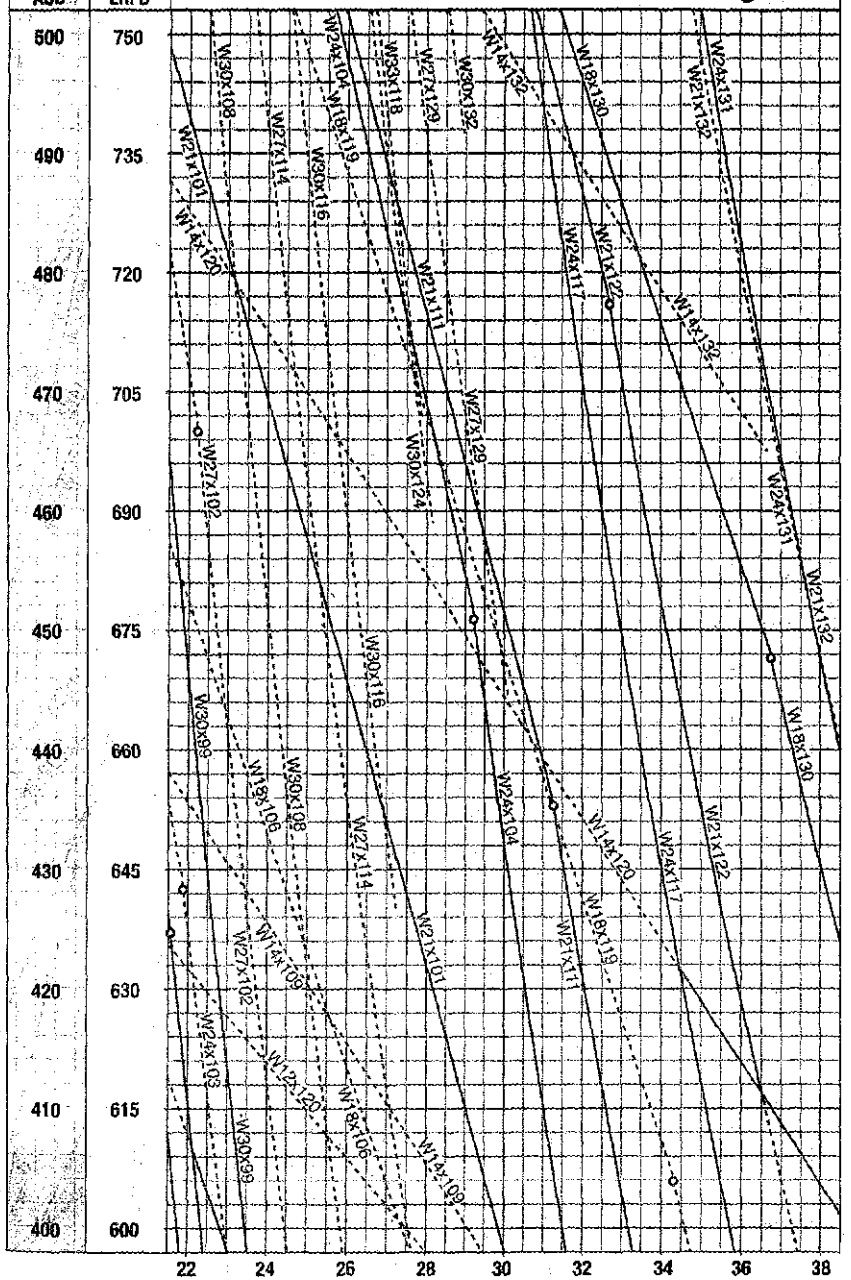

Table 3-10 (continued)

W-Shapes

Available Moment vs. Unbraced Length

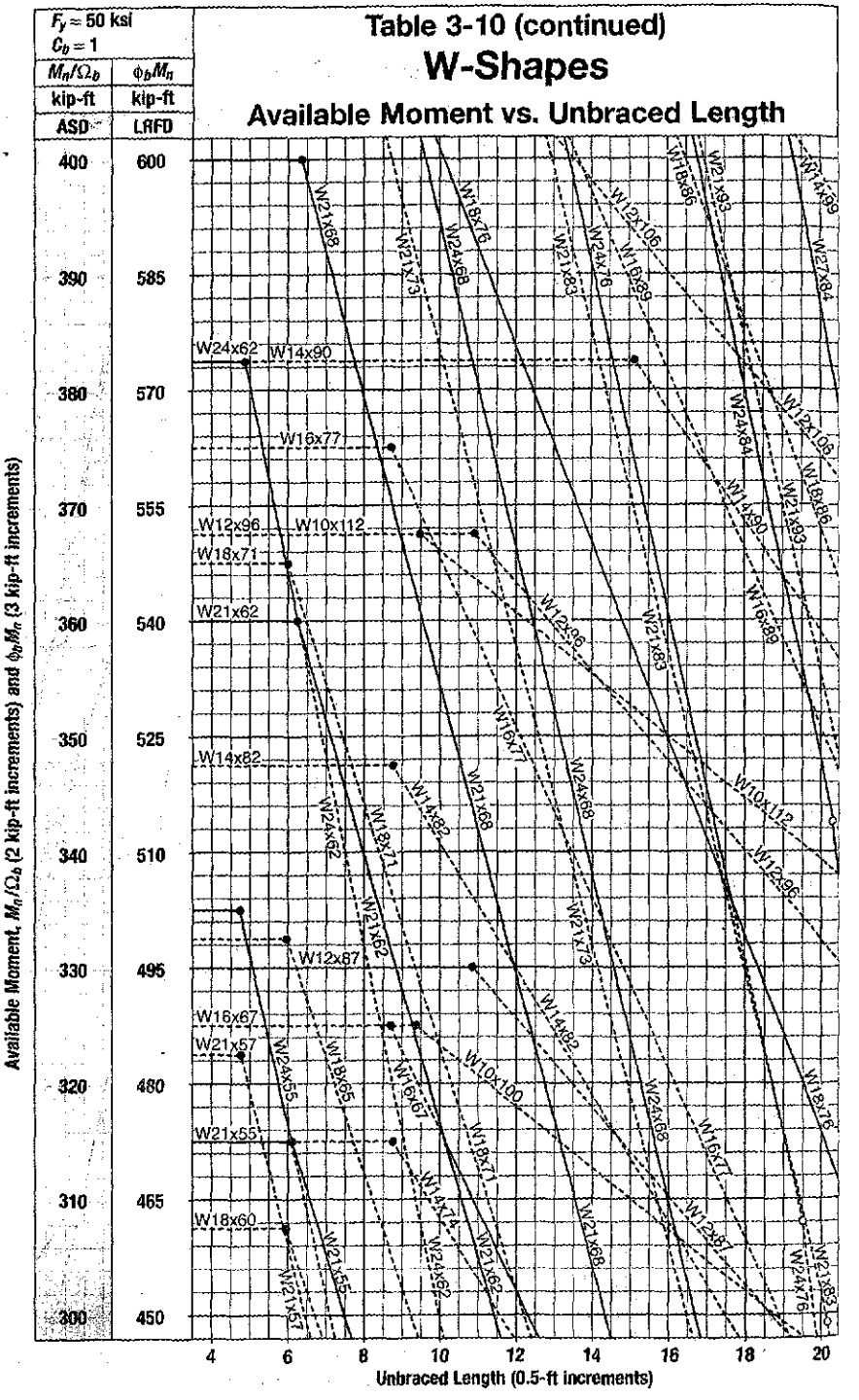

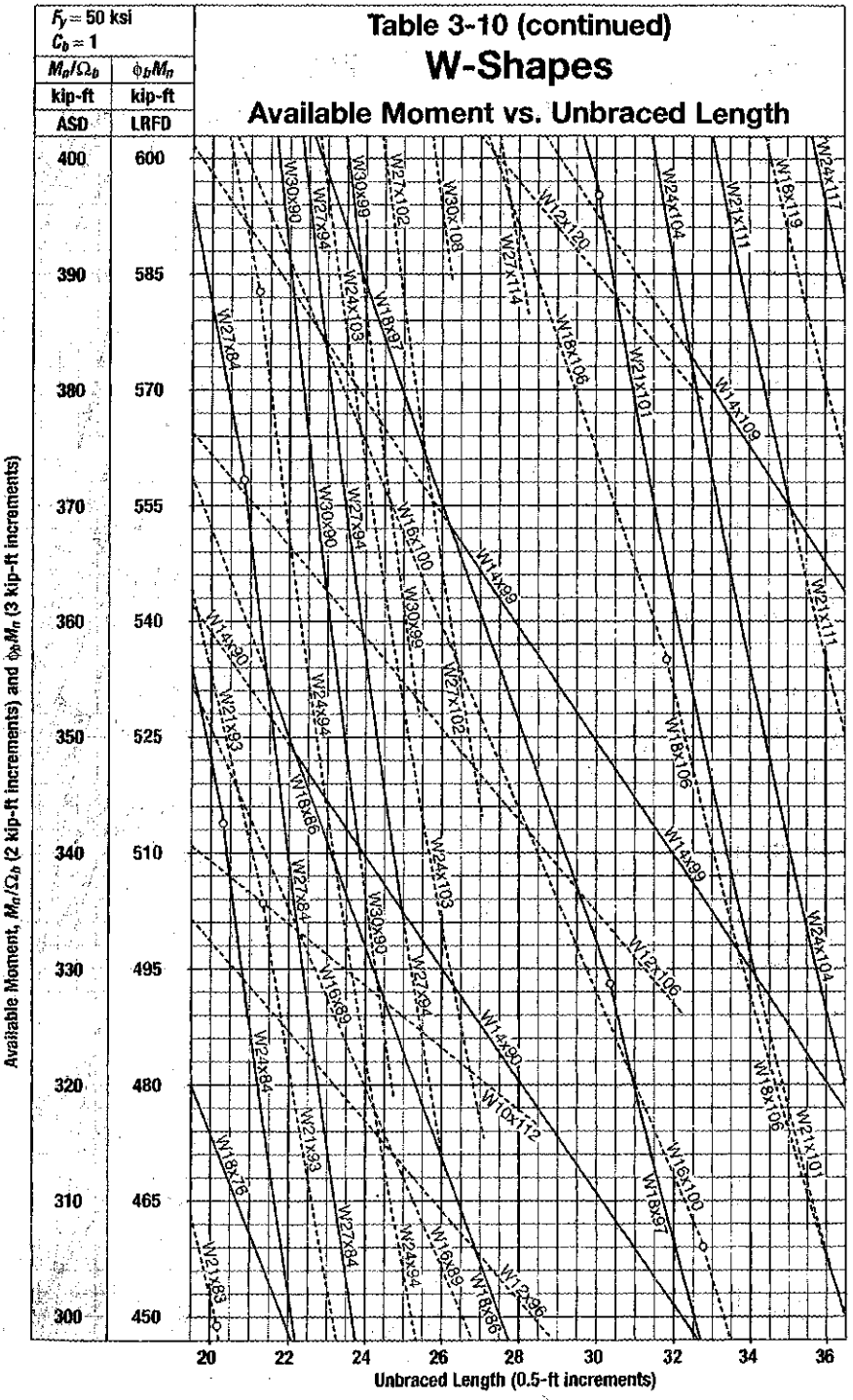
Fy = 50 ksi
Cb = 1
Mn/Ωb
kip-ft
ASD
φbMn
kip-ft
LRFD
Table 3-10 (continued)
W-Shapes
Available Moment vs. Unbraced Length
Available Moment, Mn/Ωb (2 kip-ft increments) and φbMn (3 kip-ft increments)
400 600
390 585
380 570
370 555
360 540
350 525
340 510
330 495
320 480
310 465
300 450
20 22 24 26 28 30 32 34 36
Unbraced Length (0.5-ft increments)
W24x117
W18x119
W21x111
W24x104
W12x120
W27x114
W30x108
W27x102
W30x99
W30x90
W27x94
W24x103
W18x97
W27x84
W18x106
W21x101
W14x109
W30x90
W27x94
W18x100
W30x99
W14x99
W21x111
W14x90
W21x93
W24x94
W27x102
W18x106
W16x86
W14x99
W24x103
W24x104
W30x99
W27x94
W12x106
W14x90
W16x89
W10x112
W18x106
W21x101
W21x93
W19x100
W18x97
W24x84
W18x76
W27x84
W24x94
W18x89
W12x96
W21x83
W18x86

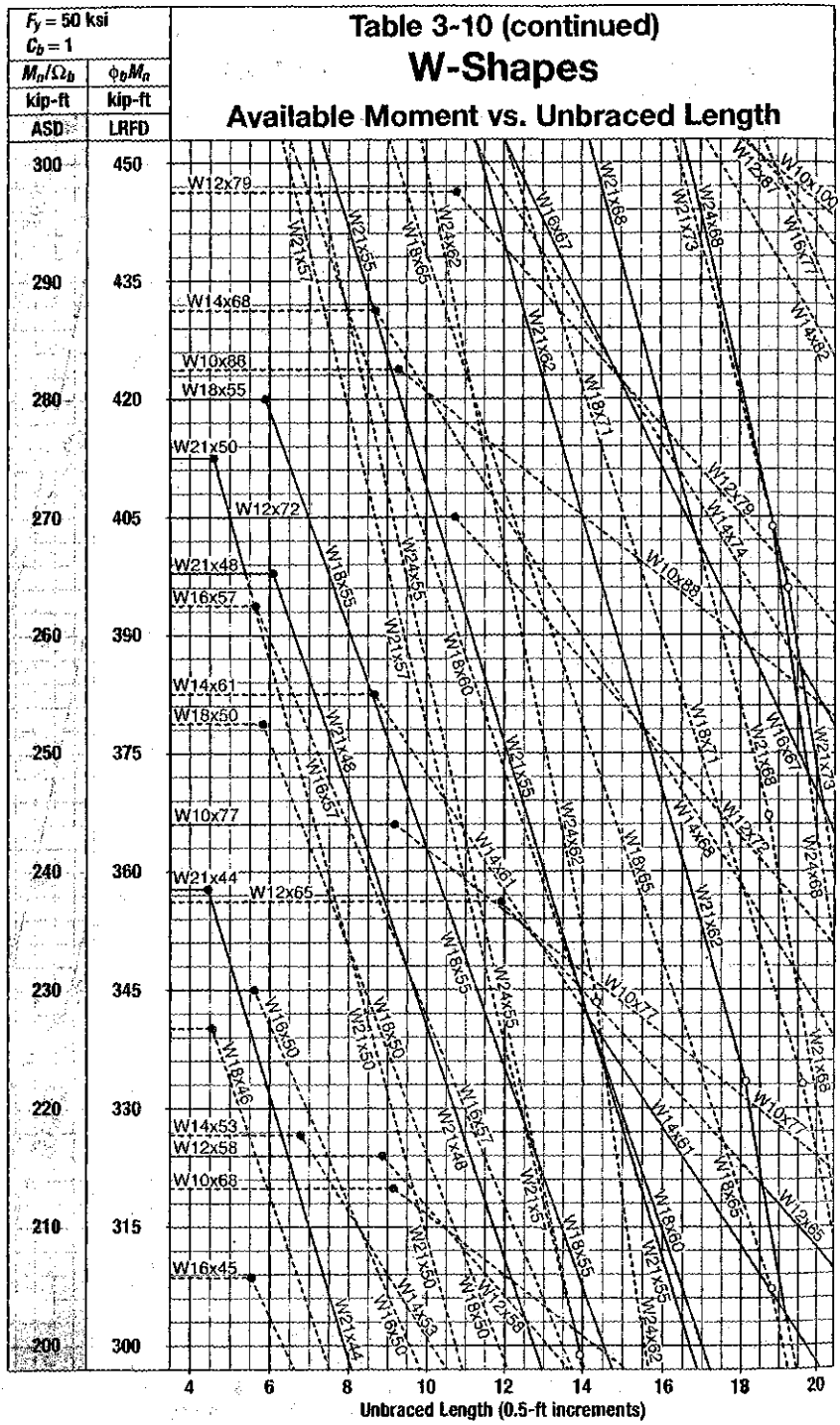
Table 3-10 (continued)
W-Shapes
Available Moment vs. Unbraced Length
F_y = 50 ksi
C_b = 1
M_n/Ω_b kip-ft ASD
$\phi_b M_n$ kip-ft LRFD
300 450
290 435
280 420
270 405
260 390
250 375
240 360
230 345
220 330
210 315
200 300
Available Moment, M_n/Ω_b (2 kip-ft increments) and $\phi_b M_n$ (3 kip-ft increments)
4 6 8 10 12 14 16 18 20
Unbraced Length (0.5-ft increments)
W12x79
W14x68
W10x88
W18x55
W21x50
W12x72
W21x48
W16x57
W14x61
W18x50
W10x77
W21x44
W12x65
W14x53
W12x58
W10x68
W16x45

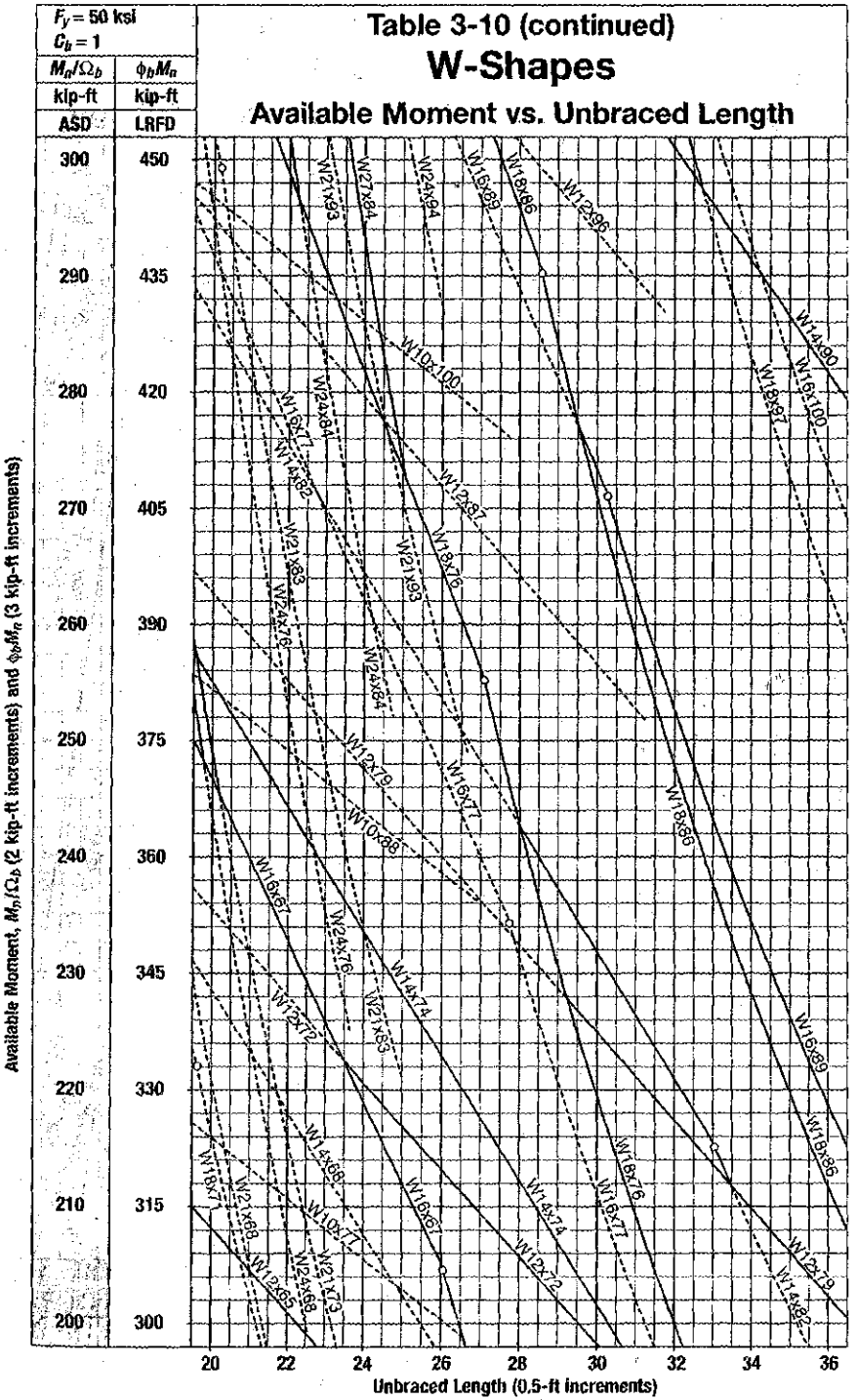
F_y = 50 ksi
C_b = 1
M_n/Ω_b
kip-ft
ASD
$\phi_b M_n$
kip-ft
LRFD
Table 3-10 (continued)
W-Shapes
Available Moment vs. Unbraced Length
Available Moment, M_n/Ω_b (2 kip-ft increments) and $\phi_b M_n$ (3 kip-ft increments)
Unbraced Length (0.5-ft increments)
300 450
290 435
280 420
270 405
260 390
250 375
240 360
230 345
220 330
210 315
200 300
20 22 24 26 28 30 32 34 36
W21x93
W27x84
W24x94
W16x89
W18x86
W12x96
W14x90
W16x100
W18x97
W10x100
W24x84
W16x77
W14x82
W12x87
W21x83
W18x76
W24x76
W12x79
W10x88
W16x67
W14x74
W12x72
W14x68
W10x77
W21x68
W18x71
W12x65
W24x68
W21x73

Table 3-10 (continued)
W-Shapes
Available Moment vs. Unbraced Length

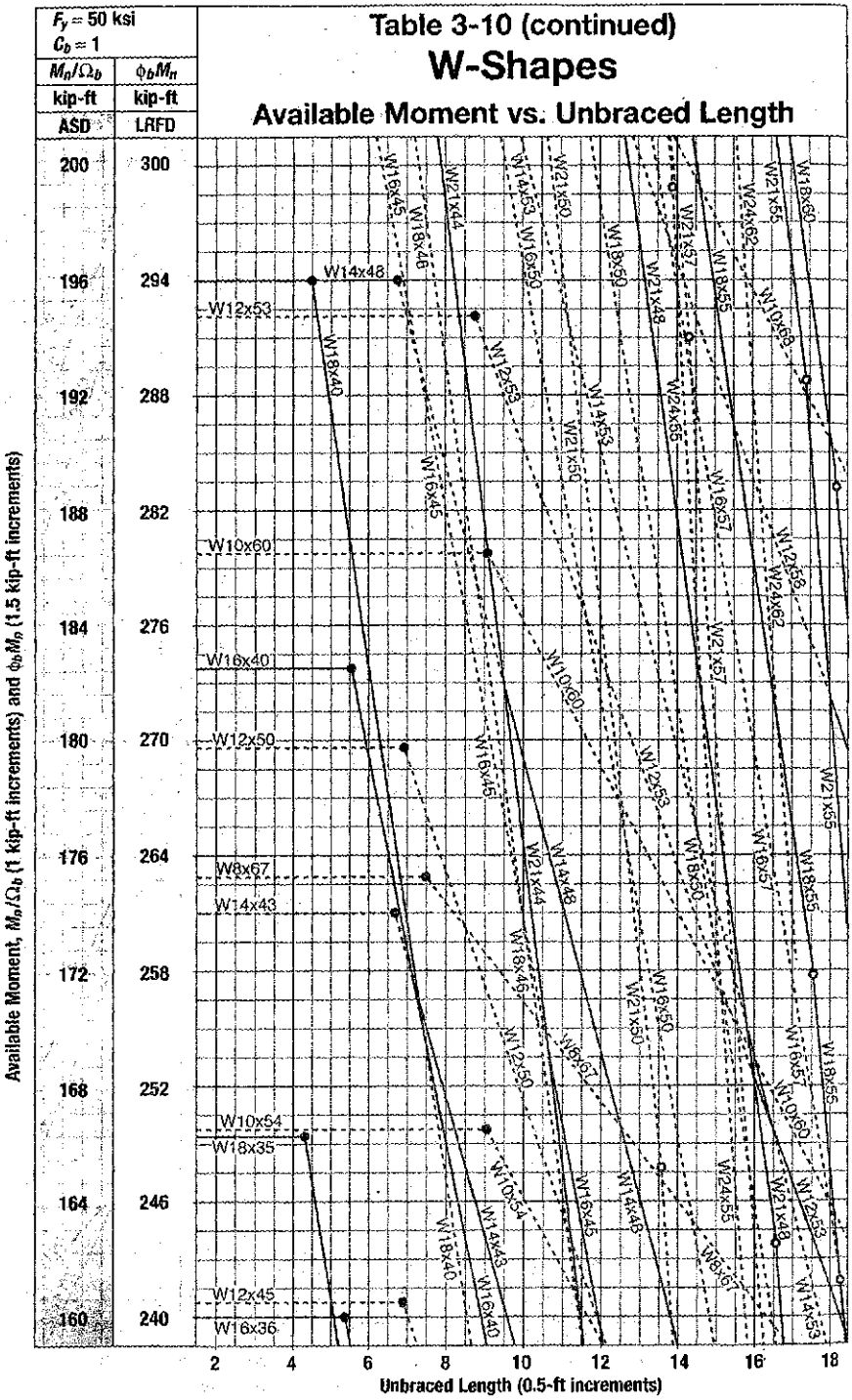

Table 3-10 (continued)
W-Shapes
Available Moment vs. Unbraced Length

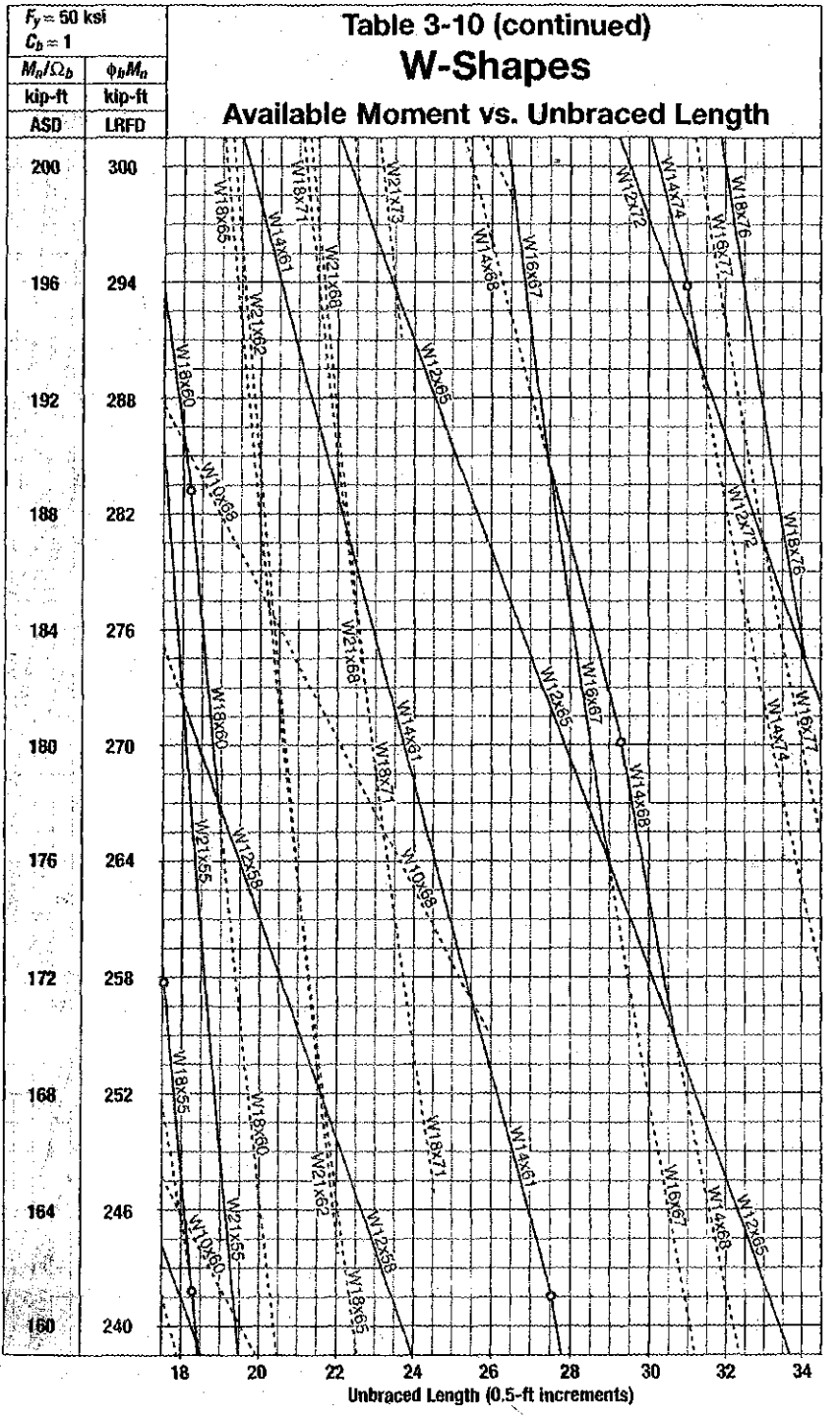

Table 3-10 (continued)

W-Shapes

Available Moment vs. Unbraced Length

$F_y = 50$ ksi
$C_b = 1$

M_n/Ω_b kip-ft ASD	$\phi_b M_n$ kip-ft LRFD
160	240
156	234
152	228
148	222
144	216
140	210
136	204
132	198
128	192
124	186
120	180

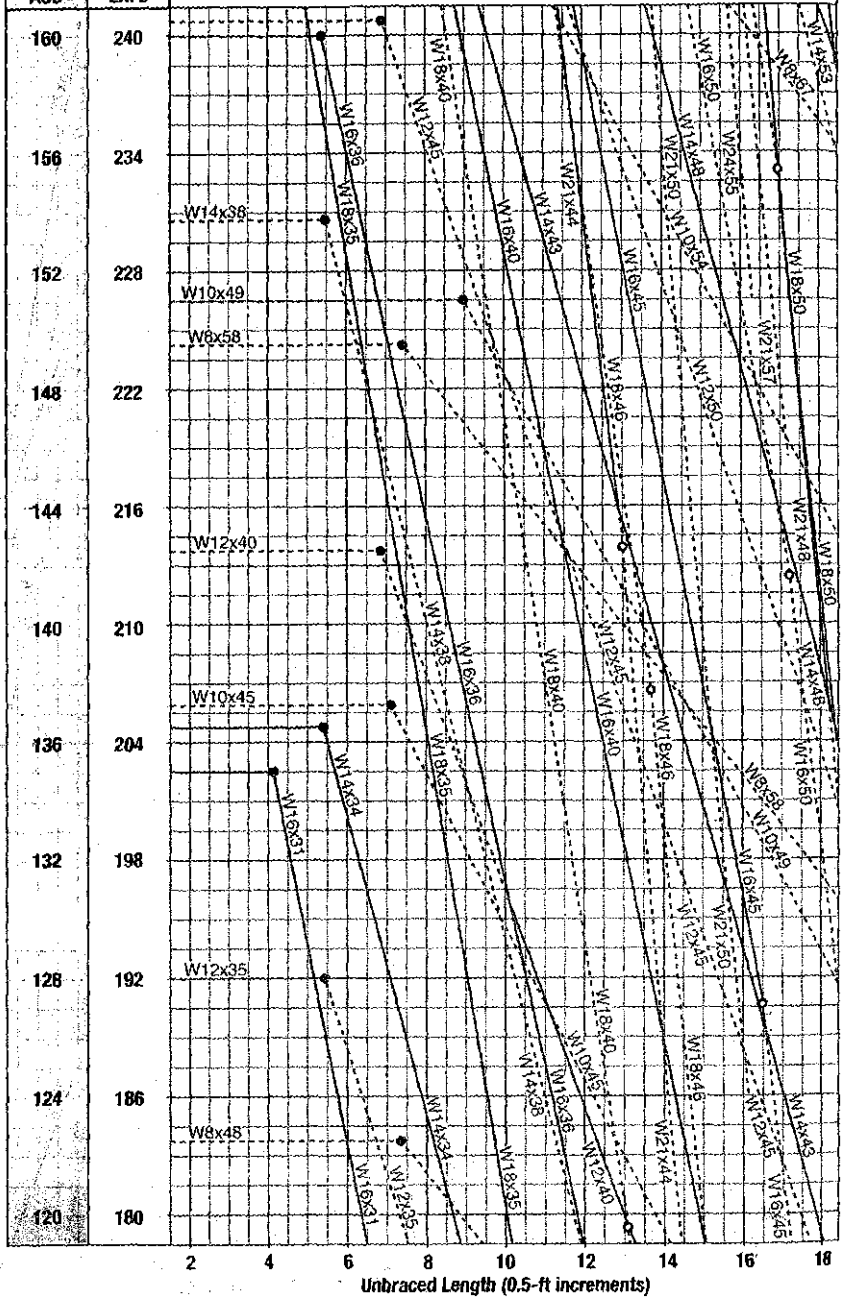

Table 3-10 (continued)
W-Shapes
Available Moment vs. Unbraced Length

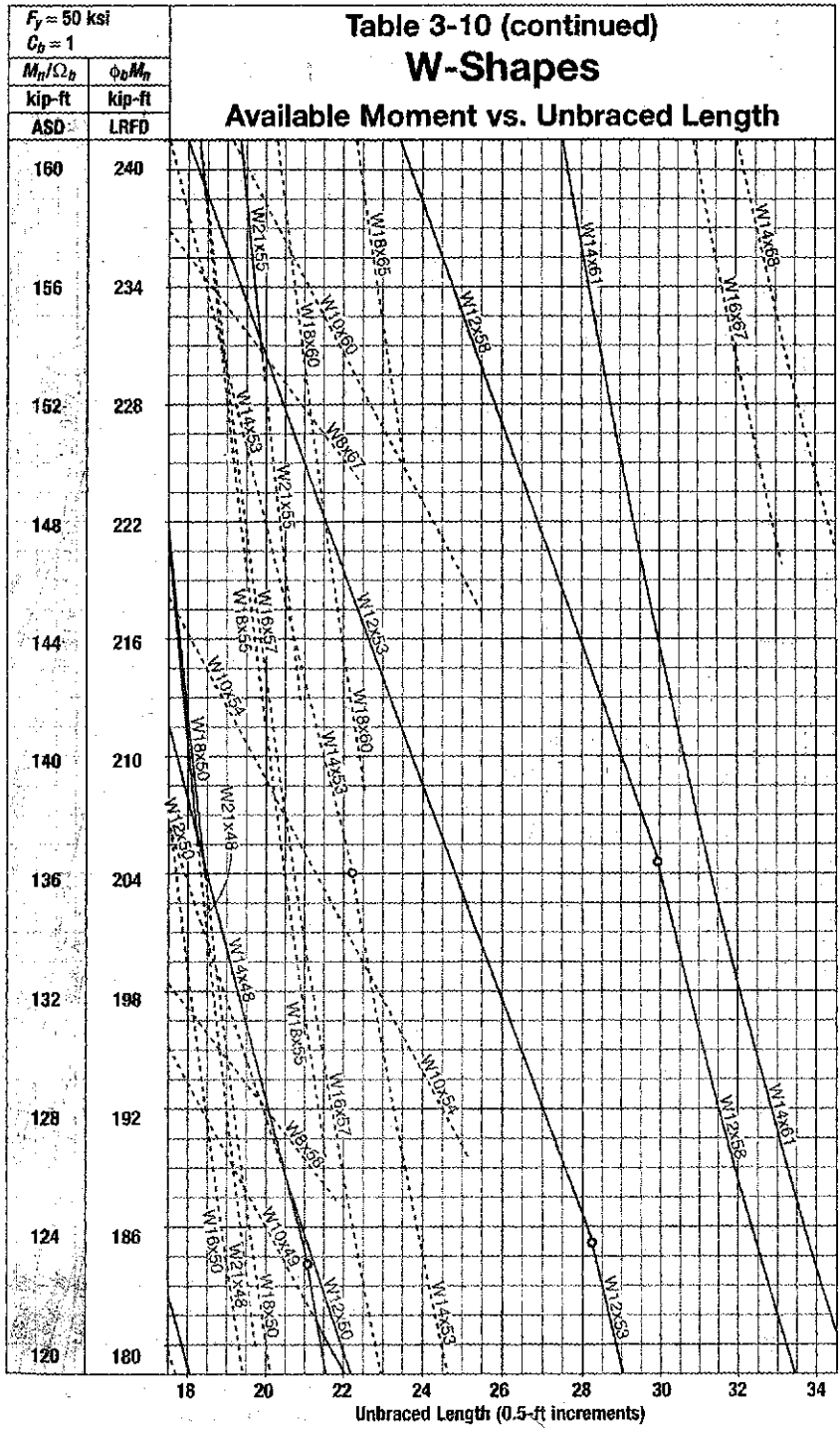

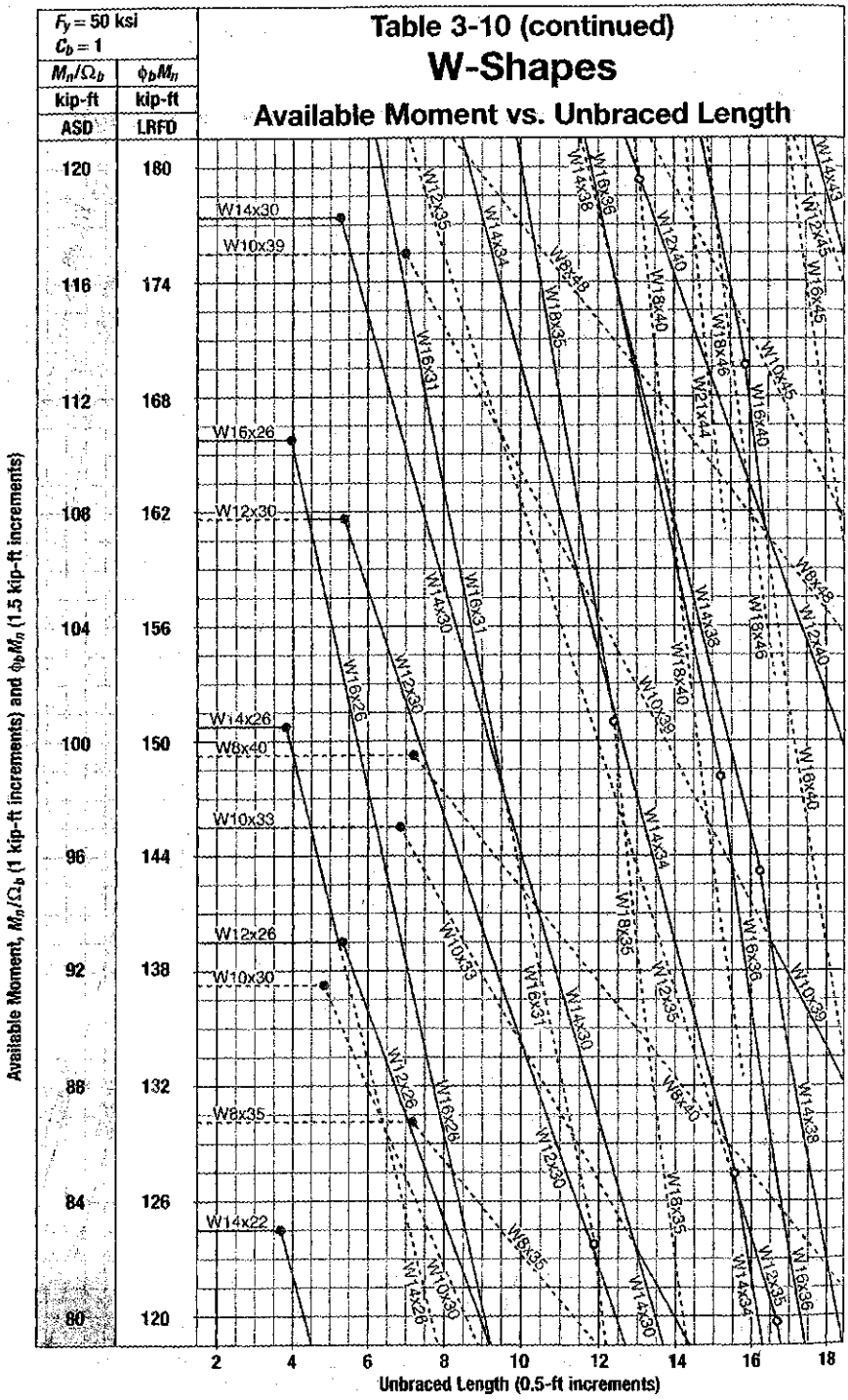
Table 3-10 (continued)
W-Shapes
Available Moment vs. Unbraced Length
F_y = 50 ksi
C_b = 1
M_n/Ω_b kip-ft ASD
$\phi_b M_n$ kip-ft LRFD
120 180
116 174
112 168
108 162
104 156
100 150
96 144
92 138
88 132
84 126
80 120
W14x30
W10x39
W16x26
W12x30
W14x26
W8x40
W10x33
W12x26
W10x30
W8x35
W14x22
W12x35
W14x34
W18x35
W8x48
W18x40
W16x31
W12x40
W18x46
W16x40
W10x45
W21x44
W12x45
W16x45
W14x43
W14x38
W18x36
W16x36
W12x28
W10x30
W14x26
W16x28
W12x30
W8x35
W14x30
W8x40
W10x39
W16x38
W18x50
W16x50
W14x48
W12x50
W18x55
W16x57
W14x53
W12x53
W21x50
W18x60
W16x67
W14x61
W12x65
W21x57
W18x65
W16x77
W14x68
W12x72
W24x55
W21x62
W18x71
W16x89
W14x82
W12x79
W24x68
W21x73
W18x86
W16x100
W14x90
W12x87
W24x76
W21x83
W18x97
W16x96
W14x99
W12x96
W24x84
W21x93
W18x106
W16x106
W14x109
W12x106
W24x94
W21x101
W18x119
W16x119
W14x120
W12x120
W24x103
W21x111
W18x130
W16x130
W14x132
W12x136
W24x117
W21x122
W18x143
W16x143
W14x145
W12x152
W24x131
W21x132
W18x158
W16x157
W14x159
W12x170
W24x146
W21x147
W18x175
W16x175
W14x176
W12x190
W24x162
W21x166
W18x192
W16x192
W14x193
W12x210
W24x176
W21x182
W18x211
W16x211
W14x211
W12x230
W24x192
W21x201
W18x234
W16x234
W14x233
W12x252
W24x207
W21x223
W18x258
W16x258
W14x257
W12x279
W24x229
W21x248
W18x283
W16x283
W14x283
W12x305
W24x250
W21x275
W18x311
W16x311
W14x311
W12x336
W24x279
W21x301
W18x343
W16x343
W14x342
W12x368
W24x306
W21x330
W18x375
W16x375
W14x370
W12x399
W24x335
W21x357
W18x406
W16x406
W14x398
W12x426
W24x370
W21x391
W18x443
W16x443
W14x426
W12x456
W24x408
W21x430
W18x484
W16x484
W14x455
W12x485
W24x448
W21x473
W18x530
W16x530
W14x500
W12x533
W24x492
W21x521
W18x586
W16x586
W14x550
W12x586
W24x544
W21x582
W18x655
W16x655
W14x605
W12x652
W24x604
W21x650
W18x730
W16x730
W14x665
W12x715
W24x666
W21x717
W18x807
W16x807
W14x730
W12x786
W24x732
W21x788
W18x886
W16x886
W14x808
W12x872
W24x813
W21x877
W18x984
W16x985
W14x873
W12x943
W24x879
W21x948
W18x1066
W16x1067
W14x953
W12x1030
W24x962
W21x1036
W18x1167
W16x1169
W14x1047
W12x1130
W24x1055
W21x1137
W18x1280
W16x1283
W14x1150
W12x1242
W24x1162
W21x1251
W18x1410
W16x1413
W14x1267
W12x1368
W24x1279
W21x1378
W18x1552
W16x1556
W14x1395
W12x1505
W24x1407
W21x1516
W18x1708
W16x1713
W14x1536
W12x1658
W24x1550
W21x1669
W18x1880
W16x1886
W14x1691
W12x1826
W24x1707
W21x1838
W18x2071
W16x2078
W14x1862
W12x2011
W24x1880
W21x2025
W18x2282
W16x2290
W14x2052
W12x2216
W24x2072
W21x2232
W18x2516
W16x2526
W14x2263
W12x2444
W24x2285
W21x2461
W18x2773
W16x2784
W14x2494
W12x2693
W24x2518
W21x2712
W18x3056
W16x3068
W14x2748
W12x2967
W24x2775
W21x2988
W18x3367
W16x3381
W14x3027
W12x3269
W24x3058
W21x3294
W18x3708
W16x3724
W14x3335
W12x3601
W24x3369
W21x3629
W18x4089
W16x4107
W14x3677
W12x3971
W24x3714
W21x3999
W18x4507
W16x4528
W14x4054
W12x4378
W24x4095
W21x4410
W18x4967
W16x4990
W14x4468
W12x4826
W24x4514
W21x4862
W18x5474
W16x5500
W14x4926
W12x5320
W24x4978
W21x5362
W18x6039
W16x6066
W14x5433
W12x5869
W24x5491
W21x5914
W18x6662
W16x6693
W14x5995
W12x6475
W24x6059
W21x6526
W18x7354
W16x7388
W14x6617
W12x7150
W24x6690
W21x7208
W18x8122
W16x8159
W14x7309
W12x7896
W24x7387
W21x7958
W18x8971
W16x9010
W14x8072
W12x8720
W24x8158
W21x8790
W18x9907
W16x9951
W14x8914
W12x9631
W24x9010
W21x9707
W18x10938
W16x10988
W14x9844
W12x10636
W24x9949
W21x10721
W18x12076
W16x12132
W14x10869
W12x11744
W24x10986
W21x11839
W18x13335
W16x13396
W14x12004
W12x12968
W24x12133
W21x13072
W18x14727
W16x14795
W14x13259
W12x14326
W24x13403
W21x14445
W18x16265
W16x16343
W14x14646
W12x15824
W24x14806
W21x15961
W18x17966
W16x18052
W14x16176
W12x17478
W24x16352
W21x17629
W18x19846
W16x19938
W14x17864
W12x19305
W24x18061
W21x19469
W18x21918
W16x22018
W14x19732
W12x21324
W24x19953
W21x21516
W18x24211
W16x24329
W14x21802
W12x23560
W24x22048
W21x23772
W18x26746
W16x26880
W14x24086
W12x26027
W24x24349
W21x26255
W18x29547
W16x29695
W14x26607
W12x28749
W24x26902
W21x28997
W18x32635
W16x32799
W14x29395
W12x31763
W24x29717
W21x32031
W18x36050
W16x36231
W14x32470
W12x35085
W24x32825
W21x35391
W18x39817
W16x40017
W14x35866
W12x38756
W24x36260
W21x39098
W18x43985
W16x44205
W14x39624
W12x42810
W24x40054
W21x43189
W18x48584
W16x48815
W14x43753
W12x47263
W24x44217
W21x47683
W18x53644
W16x53904
W14x48312
W12x52189
W24x48833
W21x52658
W18x59230
W16x59529
W14x53360
W12x57645
W24x53931
W21x58161
W18x65415
W16x65744
W14x59200
W12x63977
W24x59855
W21x64557
W18x72246
W16x72606
W14x65370
W12x70650
W24x66094
W21x71276
W18x79777
W16x80161
W14x72178
W12x77990
W24x72962
W21x78676
W18x88076
W16x88496
W14x79677
W12x86071
W24x80516
W21x86833
W18x97227
W16x97694
W14x87961
W12x95033
W24x88907
W21x95864
W18x107339
W16x107849
W14x97108
W12x104896
W24x98135
W21x105833
W18x118516
W16x119064
W14x107202
W12x115814
W24x108331
W21x116833
W18x130827
W16x131419
W14x118350
W12x127824
W24x119579
W21x128931
W18x144396
W16x145090
W14x130650
W12x141150
W24x132015
W21x142331
W18x159396
W16x160161
W14x144196
W12x155796
W24x145715
W21x157131
W18x175996
W16x176878
W14x159196
W12x171996
W24x160915
W21x173531
W18x194396
W16x195378
W14x176596
W12x190996
W24x178715
W21x192731
W18x214796
W16x215878
W14x194396
W12x210196
W24x196915
W21x212331
W18x236396
W16x237478
W14x214596
W12x231796
W24x216515
W21x233331
W18x260396
W16x261478
W14x236196
W12x254796
W24x238515
W21x257131
W18x286396
W16x287478
W14x259196
W12x279996
W24x262515
W21x282931
W18x314796
W16x315878
W14x285196
W12x307596
W24x288515
W21x310931
W18x345596
W16x346878
W14x312996
W12x337396
W24x316515
W21x341331
W18x379596
W16x380878
W14x343996
W12x370596
W24x347715
W21x374931
W18x416796
W16x418278
W14x377196
W12x407196
W24x381315
W21x411731
W18x457596
W16x459078
W14x414796
W12x447396
W24x419115
W21x452731
W18x502996
W16x504478
W14x455796
W12x491996
W24x460915
W21x496931
W18x552396
W16x553878
W14x501196
W12x540996
W24x506915
W21x546531
W18x607196
W16x608678
W14x550996
W12x594196
W24x557315
W21x600531
W18x667396
W16x668878
W14x605196
W12x653196
W24x612515
W21x660331
W18x733796
W16x735278
W14x665796
W12x718396
W24x673515
W21x726331
W18x806396
W16x807878
W14x732196
W12x790196
W24x740715
W21x798931
W18x886796
W16x888278
W14x805396
W12x869196
W24x814715
W21x878931
W18x975196
W16x976678
W14x885596
W12x956196
W24x896715
W21x966931
W18x1072796
W16x1074278
W14x974196
W12x1051996
W24x985515
W21x1063331
W18x1179996
W16x1181478
W14x1071796
W12x1157196
W24x1084115
W21x1169731
W18x1297796
W16x1299278
W14x1178996
W12x1272796
W24x1192515
W21x1286531
W18x1427596
W16x1429078
W14x1296796
W12x1399996
W24x1311715
W21x1414931
W18x1570396
W16x1571878
W14x1426596
W12x1539996
W24x1441715
W21x1556131
W18x1727396
W16x1728878
W14x1569196
W12x1693996
W24x1586515
W21x1711731
W18x1900196
W16x1901678
W14x1726196
W12x1863196
W24x1745115
W21x1883331
W18x2090196
W16x2091678
W14x1898796
W12x2049196
W24x1919715
W21x2071731
W18x2299196
W16x2300678
W14x2088596
W12x2254196
W24x2112515
W21x2279131
W18x2529196
W16x2530678
W14x2297196
W12x2480196
W24x2324115
W21x2507331
W18x2782196
W16x2783678
W14x2527196
W12x2728196
W24x2556515
W21x2758131
W18x3060196
W16x3061678
W14x2780196
W12x3001196
W24x2812115
W21x3033931
W18x3366196
W16x3367678
W14x3058196
W12x3301196
W24x3093715
W21x3337731
W18x3702796
W16x3704278
W14x3364196
W12x3631196
W24x3403315
W21x3671531
W18x4073196
W16x4074678
W14x3700196
W12x3994196
W24x3740115
W21x4038931
W18x4480196
W16x4481678
W14x4070196
W12x4393196
W24x4114515
W21x4442331
W18x4928196
W16x4929678
W14x4477196
W12x4832196
W24x4525715
W21x4886731
W18x5421196
W16x5422678
W14x4924796
W12x5315196
W24x4979515
W21x5375531
W18x5963196
W16x5964678
W14x5417196
W12x5846196
W24x5477115
W21x5913131
W18x6559196
W16x6560678
W14x5958996
W12x6430996
W24x6024915
W21x6504531
W18x7215196
W16x7216678
W14x6554796
W12x7074196
W24x6627515
W21x7155931
W18x7936796
W16x7938278
W14x7210196
W12x7781196
W24x7290115
W21x7871331
W18x8730196
W16x8731678
W14x7931196
W12x8559196
W24x8018715
W21x8658731
W18x9603196
W16x9604678
W14x8724196
W12x9415196
W24x8821515
W21x9524531
W18x10563196
W16x10564678
W14x9596796
W12x10356996
W24x9703315
W21x10477331
W18x11619196
W16x11620678
W14x10556196
W12x11392196
W24x10675115
W21x11525131
W18x12781196
W16x12782678
W14x11611796
W12x12531196
W24x11736915
W21x12677931
W18x14059196
W16x14060678
W14x12773596
W12x13784196
W24x12910515
W21x13941731
W18x15465196
W16x15466678
W14x14050996
W12x15162196
W24x14201115
W21x15336531
W18x17011196
W16x17012678
W14x15456196
W12x16678196
W24x15621715
W21x16870331
W18x18712196
W16x18713678
W14x16999796
W12x18345996
W24x17182315
W21x18557131
W18x20583196
W16x20584678
W14x18699796
W12x20180196
W24x18904115
W21x20413131
W18x22641196
W16x22642678
W14x20569796
W12x22198196
W24x20785915
W21x22454531
W18x24905196
W16x24906678
W14x22626796
W12x24417996
W24x22867715
W21x24699931
W18x27396196
W16x27397678
W14x24889596
W12x26859996
W24x25154515
W21x27170331
W18x30136196
W16x30137678
W14x27378196
W12x29545996
W24x27672315
W21x29887131
W18x33150196
W16x33151678
W14x30116196
W12x32500196
W24x30439115
W21x32875931
W18x36465196
W16x36466678
W14x33127796
W12x35750196
W24x33511915
W21x36163531
W18x40111196
W16x40112678
W14x36440596
W12x39325196
W24x36863715
W21x39779931
W18x44122196
W16x44123678
W14x40084796
W12x43257996
W24x40550515
W21x43757731
W18x48534196
W16x48535678
W14x44093196
W12x47583996
W24x44605315
W21x48133531
W18x53387196
W16x53388678
W14x48502596
W12x52342196
W24x49085115
W21x52969331
W18x58725196
W16x58726678
W14x53352796
W12x57576196
W24x53993715
W21x58266131
W18x64597196
W16x64598678
W14x58688196
W12x63333996
W24x59432515
W21x64127931
W18x71056196
W16x71057678
W14x64556796
W12x69667196
W24x65375315
W21x70540731
W18x78161196
W16x78162678
W14x71012596
W12x76633996
W24x71918115
W21x77594531
W18x85977196
W16x85978678
W14x78113796
W12x84297196
W24x79112915
W21x85354331
W18x94575196
W16x94576678
W14x85925196
W12x92726996
W24x87006715
W21x93889131
W18x104032196
W16x104033678
W14x94517796
W12x101999196
W24x95700515
W21x103277931
W18x114435196
W16x114436678
W14x103969596
W12x112199196
W24x105194315
W21x113605731
W18x125879196
W16x125880678
W14x114366196
W12x123419196
W24x115688115
W21x124933531
W18x138467196
W16x138468678
W14x125762796
W12x135761996
W24x126681915
W21x136261331
W18x152314196
W16x152315678
W14x138159396
W12x149338196
W24x138676715
W21x149589131
W18x167545196
W16x167546678
W14x151955996
W12x163671996
W24x151672515
W21x164417931
W18x184299196
W16x184300678
W14x167152596
W12x180005996
W24x165669315
W21x180746731
W18x202729196
W16x202730678
W14x184349196
W12x197006196
W24x181666115
W21x197575531
W18x223002196
W16x223003678
W14x202545796
W12x216806196
W24x199662915
W21x217404331
W18x245302196
W16x245303678
W14x223742396
W12x238606196
W24x219659715
W21x239233131
W18x269602196
W16x269603678
W14x245938996
W12x262406196
W24x241656515
W21x263061931
W18x295902196
W16x295903678
W14x270135596
W12x288206196
W24x265653315
W21x289890731
W18x324202196
W16x324203678
W14x296332196
W12x316006196
W24x291650115
W21x318719531
W18x354502196
W16x354503678
W14x324528796
W12x345806196
W24x319646915
W21x350548331
W18x386802196
W16x386803678
W14x354725396
W12x377606196
W24x349643715
W21x384377131
W18x422102196
W16x422103678
W14x386921996
W12x411406196
W24x381640515
W21x420205931
W18x459402196
W16x459403678
W14x421118596
W12x447206196
W24x415637315
W21x458034731
W18x498702196
W16x498703678
W14x457315196
W12x485006196
W24x451634115
W21x497863531
W18x540002196
W16x540003678
W14x495511796
W12x524806196
W24x489630915
W21x539692331
W18x583302196
W16x583303678
W14x535708396
W12x566606196
W24x529627715
W21x583521131
W18x628602196
W16x628603678
W14x577904996
W12x610406196
W24x571624515
W21x629349931
W18x675902196
W16x675903678
W14x622101596
W12x656206196
W24x615621315
W21x677178731
W18x726202196
W16x726203678
W14x668298196
W12x704006196
W24x661618115
W21x727007531
W18x778502196
W16x778503678
W14x716494796
W12x753806196
W24x709614915
W21x778836331
W18x832802196
W16x832803678
W14x766691396
W12x805606196
W24x759611715
W21x832665131
W18x889102196
W16x889103678
W14x818887996
W12x859406196
W24x811608515
W21x888493931
W18x947402196
W16x947403678
W14x873084596
W12x915206196
W24x865605315
W21x946322731
W18x1007702196
W16x1007703678
W14x929281196
W12x973006196
W24x921602115
W21x1006151531
W18x1070002196
W16x1070003678
W14x987477796
W12x1032806196
W24x979598915
W21x1067980331
W18x1134302196
W16x1134303678
W14x1047674396
W12x1094606196
W24x1039595715
W21x1131809131
W18x1200602196
W16x1200603678
W14x1109870996
W12x1158406196
W24x1101592515
W21x1197637931
W18x1268902196
W16x1268903678
W14x1174067596
W12x1224206196
W24x1165589315
W21x1265466731
W18x1339202196
W16x1339203678
W14x1240264196
W12x1292006196
W24x1231586115
W21x1335295531
W18x1411502196
W16x1411503678
W14x1308460796
W12x1361806196
W24x1299582915
W21x1407124331
W18x1485802196
W16x1485803678
W14x1378657396
W12x1433606196
W24x1369579715
W21x1480953131
W18x1562102196
W16x1562103678
W14x1450853996
W12x1507406196
W24x1441576515
W21x1556781931
W18x1640402196
W16x1640403678
W14x1525050596
W12x1583206196
W24x1515573315
W21x1634610731
W18x1720702196
W16x1720703678
W14x1601247196
W12x1661006196
W24x1591570115
W21x1714439531
W18x1803002196
W16x1803003678
W14x1679443796
W12x1740806196
W24x1669566915
W21x1796268331
W18x1887302196
W16x1887303678
W14x1759640396
W12x1822606196
W24x1749563715
W21x1880097131
W18x1973602196
W16x1973603678
W14x1841836996
W12x1906406196
W24x1831560515
W21x1965925931
W18x2061902196
W16x2061903678
W14x1926033596
W12x1992206196
W24x1915557315
W21x2053754731
W18x2152202196
W16x2152203678
W14x2012230196
W12x2080006196
W24x2001554115
W21x2143583531
W18x2244502196
W16x2244503678
W14x2100426796
W12x2169806196
W24x2089550915
W21x2235412331
W18x2338802196
W16x2338803678
W14x2190623396
W12x2261606196
W24x2179547715
W21x2329241131
W18x2435102196
W16x2435103678
W14x2282819996
W12x2355406196
W24x2271544515
W21x2425069931
W18x2533402196
W16x2533403678
W14x2377016596
W12x2451206196
W24x2365541315
W21x2522898731
W18x2633702196
W16x2633703678
W14x2473213196
W12x2550006196
W24x2461538115
W21x2622727531
W18x2736002196
W16x2736003678
W14x2571409796
W12x2650806196
W24x2559534915
W21x2724556331
W18x2840302196
W16x2840303678
W14x2671606396
W12x2753606196
W24x2659531715
W21x2828385131
W18x2946602196
W16x2946603678
W14x2773802996
W12x2858406196
W24x2761528515
W21x2934213931
W18x3054902196
W16x3054903678
W14x2877999596
W12x2965206196
W24x2865525315
W21x3042042731
W18x3165202196
W16x3165203678
W14x2984196196
W12x3074006196
W24x2971522115
W21x3151871531
W18x3277502196
W16x3277503678
W14x3092392796
W12x3184806196
W24x3079518915
W21x3263700331
W18x3391802196
W16x3391803678
W14x3202589396
W12x3297606196
W24x3189515715
W21x3377529131
W18x3508102196
W16x3508103678
W14x3314785996
W12x3412406196
W24x3301512515
W21x3493357931
W18x3626402196
W16x3626403678
W14x3428982596
W12x3529206196
W24x3415509315
W21x3611186731
W18x3746702196
W16x3746703678
W14x3545179196
W12x3648006196
W24x3531506115
W21x3731015531
W18x3869002196
W16x3869003678
W14x3663375796
W12x3768806196
W24x3649502915
W21x3852844331
W18x3993302196
W16x3993303678
W14x3783572396
W12x3891606196
W24x3769499715
W21x3976673131
W18x4119602196
W16x4119603678
W14x3905768996
W12x4016406196
W24x3891496515
W21x4102501931
W18x4247902196
W16x4247903678
W14x4029965596
W12x4143206196
W24x4015493315
W21x4230330731
W18x4378202196
W16x4378203678
W14x4156162196
W12x4272006196
W24x4141490115
W21x4360159531
W18x4510502196
W16x4510503678
W14x4284358796
W12x4402806196
W24x4269486915
W21x4491988331
W18x4644802196
W16x4644803678
W14x4414555396
W12x4535606196
W24x4399483715
W21x4625817131
W18x4781102196
W16x4781103678
W14x4546751996
W12x4670406196
W24x4531480515
W21x4761645931
W18x4919402196
W16x4919403678
W14x4680948596
W12x4807206196
W24x4665477315
W21x4899474731
W18x5059702196
W16x5059703678
W14x4817145196
W12x4946006196
W24x4801474115
W21x5039303531
W18x5202002196
W16x5202003678
W14x4955341796
W12x5086806196
W24x4939470915
W21x5181132331
W18x5346302196
W16x5346303678
W14x5095538396
W12x5229606196
W24x5079467715
W21x5324961131
W18x5492602196
W16x5492603678
W14x5237734996
W12x5374406196
W24x5221464515
W21x5470789931
W18x5640902196
W16x5640903678
W14x5381931596
W12x5521206196
W24x5365461315
W21x5618618731
W18x5791202196
W16x5791203678
W14x5528128196
W12x5670006196
W24x5511458115
W21x5768447531
W18x5943502196
W16x5943503678
W14x5676324796
W12x5820806196
W24x5659454915
W21x5920276331
W18x6097802196
W16x6097803678
W14x5826521396
W12x5973606196
W24x5809451715
W21x6074105131
W18x6254102196
W16x6254103678
W14x5978717996
W12x6128406196
W24x5961448515
W21x6229933931
W18x6412402196
W16x6412403678
W14x6132914596
W12x6285206196
W24x6115445315
W21x6387762731
W18x6572702196
W16x6572703678
W14x6289111196
W12x6444006196
W24x6271442115
W21x6547591531
W18x6735002196
W16x6735003678
W14x6447307796
W12x6604806196
W24x6429438915
W21x6709420331
W18x6899302196
W16x6899303678
W14x6607504396
W12x6767606196
W24x6589435715
W21x6873249131
W18x7065602196
W16x7065603678
W14x6769700996
W12x6932406196
W24x6751432515
W21x7039077931
W18x7233902196
W16x7233903678
W14x6933897596
W12x7099206196
W24x6915429315
W21x7206906731
W18x7404202196
W16x7404203678
W14x7100094196
W12x7268006196
W24x7081426115
W21x7376735531
W18x7576502196
W16x7576503678
W14x7268290796
W12x7438806196
W24x7249422915
W21x7548564331
W18x7750802196
W16x7750803678
W14x7438487396
W12x7611606196
W24x7419419715
W21x7722393131
W18x7927102196
W16x7927103678
W14x7610683996
W12x7786406196
W24x7591416515
W21x7898221931
W18x8105402196
W16x8105403678
W14x7784880596
W12x7963206196
W24x7765413315
W21x8076050731
W18x8285702196
W16x8285703678
W14x7961077196
W12x8142006196
W24x7941410115
W21x8255879531
W18x8468002196
W16x8468003678
W14x8139273796
W12x8322806196
W24x8119406915
W21x8437708331
W18x8652302196
W16x8652303678
W14x8319470396
W12x8505606196
W24x8299403715
W21x8621537131
W18x8838602196
W16x8838603678
W14x8501666996
W12x8690406196
W24x8481400515
W21x8807365931
W18x9026902196
W16x9026903678
W14x8685863596
W12x8877206196
W24x8665397315
W21x8995194731
W18x9217202196
W16x9217203678
W14x8872060196
W12x9066006196
W24x8851394115
W21x9185023531
W18x9409502196
W16x9409503678
W14x9060256796
W12x9256806196
W24x9039390915
W21x9376852331
W18x9603802196
W16x9603803678
W14x9250453396
W12x9449606196
W24x9229387715
W21x9570681131
W18x9800102196
W16x9800103678
W14x9442649996
W12x9644406196
W24x9421384515
W21x9766509931
W18x9998402196
W16x9998403678
W14x9636846596
W12x9841206196
W24x9615381315
W21x9964338731
W18x10198702196
W16x10198703678
W14x9833043196
W12x10040006196
W24x9811378115
W21x10164167531
W18x10401002196
W16x10401003678
W14x10031239796
W12x10240806196
W24x10009374915
W21x10365996331
W18x10605302196
W16x10605303678
W14x10231436396
W12x10443606196
W24x10209371715
W21x10569825131
W18x10811602196
W16x10811603678
W14x10433632996
W12x10648406196
W24x10411368515
W21x10775653931
W18x11019902196
W16x11019903678
W14x10637829596
W12x10855206196
W24x10615365315
W21x10983482731
W18x11230202196
W16x11230203678
W14x10844026196
W12x11064006196
W24x10821362115
W21x11193311531
W18x11442502196
W16x11442503678
W14x11052222796
W12x11274806196
W24x11029358915
W21x11405140331
W18x11656802196
W16x11656803678
W14x11262419396
W12x11487606196
W24x11239355715
W21x11618969131
W18x11873102196
W16x11873103678
W14x11474615996
W12x11702406196
W24x11451352515
W21x11834797931
W18x12091402196
W16x12091403678
W14x11688812596
W12x11919206196
W24x11665349315
W21x12052626731
W18x12311702196
W16x12311703678
W14x11905009196
W12x12138006196
W24x11881346115
W21x12272455531
W18x12534002196
W16x12534003678
W14x12123205796
W12x12358806196
W24x12099342915
W21x12494284331
W18x12758302196
W16x12758303678
W14x12343402396
W12x12581606196
W24x12319339715
W21x12718113131
W18x12984602196
W16x12984603678
W14x12565598996
W12x12806406196
W24x12541336515
W21x12943941931
W18x13212902196
W16x13212903678
W14x12789795596
W12x13033206196
W24x12765333315
W21x13171770731
W18x13443202196
W16x13443203678
W14x13015992196
W12x13262006196
W24x12991330115
W21x13401599531
W18x13675502196
W16x13675503678
W14x13244188796
W12x13492806196
W24x13219326915
W21x13633428331
W18x13909802196
W16x13909803678
W14x13474385396
W12x13725606196
W24x13449323715
W21x13867257131
W18x14146102196
W16x14146103678
W14x13706581996
W12x13960406196
W24x13681320515
W21x14103085931
W18x14384402196
W16x14384403678
W14x13940778596
W12x14197206196
W24x13915317315
W21x14340914731
W18x14624702196
W16x14624703678
W14x14176975196
W12x14436006196
W24x14151314115
W21x14580743531
W18x14867002196
W16x14867003678
W14x14415171796
W12x14676806196
W24x14389310915
W21x14822572331
W18x15111302196
W16x15111303678
W14x14655368396
W12x14919606196
W24x14629307715
W21x15066401131
W18x15357602196
W16x15357603678
W14x14897564996
W12x15164406196
W24x14871304515
W21x15312229931
W18x15605902196
W16x15605903678
W14x15141761596
W12x15411206196
W24x15115301315
W21x15560058731
W18x15856202196
W16x15856203678
W14x15387958196
W12x15660006196
W24x15361298115
W21x15809887531
W18x16108502196
W16x16108503678
W14x15636154796
W12x15910806196
W24x15609294915
W21x16061716331
W18x16362802196
W16x16362803678
W14x15886351396
W12x16163606196
W24x15859291715
W21x16315545131
W18x16619102196
W16x16619103678
W14x16138547996
W12x16418406196
W24x16111288515
W21x16571373931
W18x16877402196
W16x16877403678
W14x16392744596
W12x16675206196
W24x16365285315
W21x16829202731
W18x17137702196
W16x17137703678
W14x16648941196
W12x16934006196
W24x16621282115
W21x17089031531
W18x17400002196
W16x17400003678
W14x16907137796
W12x17194806196
W24x16879278915
W21x17350860331
W18x17664302196
W16x17664303678
W14x17167334396
W12x17457606196
W24x17139275715
W21x17614689131
W18x17930602196
W16x17930603678
W14x17429530996
W12x17722406196
W24x17401272515
W21x17880517931
W18x18198902196
W16x18198903678
W14x17693727596
W12x17989206196
W24x17665269315
W21x18148346731
W18x18469202196
W16x18469203678
W14x17959924196
W12x18258006196
W24x17931266115
W21x18418175531
W18x18741502196
W16x18741503678
W14x18228120796
W12x18528806196
W24x18199262915
W21x18689004331
W18x19015802196
W16x19015803678
W14x18498317396
W12x18801606196
W24x18469259715
W21x18961833131
W18x19292102196
W16x19292103678
W14x18770513996
W12x19076406196
W24x18741256515
W21x19236661931
W18x19570402196
W16x19570403678
W14x19044710596
W12x19353206196
W24x19015253315
W21x19513490731
W18x19850702196
W16x19850703678
W14x19320907196
W12x19632006196
W24x19291250115
W21x19792319531
W18x20133002196
W16x20133003678
W14x19599103796
W12x19912806196
W24x19569246915
W21x20073148331
W18x20417302196
W16x20417303678
W14x19879300396
W12x20195606196
W24x19849243715
W21x20355977131
W18x20703602196
W16x20703603678
W14x20161496996
W12x20480406196
W24x20131240515
W21x20640805931
W18x20991902196
W16x20991903678
W14x20445693596
W12x20767206196
W24x20415237315
W21x20928634731
W18x21282202196
W16x21282203678
W14x20731890196
W12x21056006196
W24x20701234115
W21x21218463531
W18x21574502196
W16x21574503678
W14x21020086796
W12x21346806196
W24x20989230915
W21x21510292331
W18x21868802196
W16x21868803678
W14x21310283396
W12x21639606196
W24x21279227715
W21x21804121131
W18x22165102196
W16x22165103678
W14x21602479996
W12x21934406196
W24x21571224515
W21x22099949931
W18x22463402196
W16x22463403678
W14x21896676596
W12x22231206196
W24x21865221315
W21x22397778731
W18x22763702196
W16x22763703678
W14x22192873196
W12x22530006196
W24x22161218115
W21x22697607531
W18x23066002196
W16x23066003678
W14x22491069796
W12x22830806196
W24x22459214915
W21x22999436331
W18x23370302196
W16x23370303678
W14x22791266396
W12x23133606196
W24x22759211715
W21x23303265131
W18x23676602196
W16x23676603678
W14x23093462996
W12x23438406196
W24x23061208515
W21x23609093931
W18x23984902196
W16x23984903678
W14x23397659596
W12x23745206196
W24x23365205315
W21x23916922731
W18x24295202196
W16x24295203678
W14x23703856196
W12x24054006196
W24x23671202115
W21x24226751531
W18x24607502196
W16x24607503678
W14x24012052796
W12x24364806196
W24x23979198915
W21x24538580331
W18x24921802196
W16x24921803678
W14x24322249396
W12x24677606196
W24x24289195715
W21x24852409131
W18x25238102196
W16x25238103678
W14x24634445996
W12x24992406196
W24x24601192515
W21x25168237931
W18x25556402196
W16x25556403678
W14x24948642596
W12x25309206196
W24x24915189315
W21x25486066731
W18x25876702196
W16x25876703678
W14x25264839196
W12x25628006196
W24x25231186115
W21x25805895531
W18x26199002196
W16x26199003678
W14x25583035796
W12x25948806196
W24x25549182915
W21x26127724331
W18x26523302196
W16x26523303678
W14x25903232396
W12x26271606196
W24x25869179715
W21x26451553131
W18x26849602196
W16x26849603678
W14x26225428996
W12x26596406196
W24x26191176515
W21x26777381931
W18x27177902196
W16x27177903678
W14x26549625596
W12x26923206196
W24x26515173315
W21x27105210731
W18x27508202196
W16x27508203678
W14x26875822196
W12x27252006196
W24x26841170115
W21x27435039531
W18x27840502196
W16x27840503678
W14x27204018796
W12x27582806196
W24x27169166915
W21x27766868331
W18x28174802196
W16x28174803678
W14x27534215396
W12x27915606196
W24x27499163715
W21x28100697131
W18x28511102196
W16x28511103678
W14x27866411996
W12x28250406196
W24x27831160515
W21x28436525931
W18x28849402196
W16x28849403678
W14x28200608596
W12x28587206196
W24x28165157315
W21x28774354731
W18x29189702196
W16x29189703678
W14x28536805196
W12x28926006196
W24x28501154115
W21x29114183531
W18x29532002196
W16x29532003678
W14x28875001796
W12x29266806196
W24x28839150915
W21x29456012331
W18x29876302196
W16x29876303678
W14x29215198396
W12x29609606196
W24x29179147715
W21x29799841131
W18x30222602196
W16x30222603678
W14x29557394996
W12x29954406196
W24x29521144515
W21x30145669931
W18x30570902196
W16x30570903678
W14x29901591596
W12x30301206196
W24x29865141315
W21x30493498731
W18x30921202196
W16x30921203678
W14x30247788196
W12x30650006196
W24x30211138115
W21x30843327531
W18x31273502196
W16x31273503678
W14x30595984796
W12x30999806196
W24x30559134915
W21x31195156331
W18x31627802196
W16x31627803678
W14x30946181396
W12x31351606196
W24x30909131715
W21x31548985131
W18x31984102196
W16x31984103678
W14x31298377996
W12x31705406196
W24x31261128515
W21x31904813931
W18x32342402196
W16x32342403678
W14x31652574596
W12x32061206196
W24x31615125315
W21x32262642731
W18x32702702196
W16x32702703678
W14x32008771196
W12x32419006196
W24x31971122115
W21x32622471531
W18x33065002196
W16x33065003678
W14x32366967796
W12x32778806196
W24x32329118915
W21x32984300331
W18x33429302196
W16x33429303678
W14x32727164396
W12x33140606196
W24x32689115715
W21x33348129131
W18x33795602196
W16x33795603678
W14x33089360996
W12x33504406196
W24x33051112515
W21x33713957931
W18x34163902196
W16x34163903678
W14x33453557596
W12x33870206196
W24x33415109315
W21x34081786731
W18x34534202196
W16x34534203678
W14x33819754196
W12x34238006196
W24x33781106115
W21x34451615531
W18x34906502196
W16x34906503678
W14x34187950796
W12x34608806196
W24x34149102915
W21x34823444331
W18x35280802196
W16x35280803678
W14x34558147396
W12x34981606196
W24x34519099715
W21x35197273131
W18x35657102196
W16x35657103678
W14x34930343996
W12x35356406196
W24x34891096515
W21x35573101931
W18x36035402196
W16x36035403678
W14x35304540596
W12x35733206196
W24x35265093315
W21x35950930731
W18x36415702196
W16x36415703678
W14x35680737196
W12x36112006196
W24x35641090115
W21x36330759531
W18x36798002196
W16x36798003678
W14x36058933796
W12x36492806196
W24x36019086915
W21x36712588331
W18x37182302196
W16x37182303678
W14x36439130396
W12x36875606196
W24x36399083715
W21x37096417131
W18x37568602196
W16x37568603678
W14x36821326996
W12x37260406196
W24x36781080515
W21x37482245931
W18x37956902196
W16x37956903678
W14x37205523596
W12x37647206196
W24x37165077315
W21x37870074731
W18x38347202196
W16x38347203678
W14x37591720196
W12x38036006196
W24x37551074115
W21x38259903531
W18x38739502196
W16x38739503678
W14x37979916796
W12x38426806196
W24x37939070915
W21x38651732331
W18x39133802196
W16x39133803678
W14x38370113396
W12x38819606196
W24x38329067715
W21x39045561131
W18x39530102196
W16x39530103678
W14x38762309996
W12x39214406196
W24x38721064515
W21x39441389931
W18x39928402196
W16x39928403678
W14x39156506596
W12x39611206196
W24x39115061315
W21x39839218731
W18x40328702196
W16x40328703678
W14x39552703196
W12x40010006196
W24x39511058115
W21x40239047531
W18x40731002196
W16x40731003678
W14x39950899796
W12x40410806196
W24x39909054915
W21x40640876331
W18x41135302196
W16x41135303678
W14x40351096396
W12x40813606196
W24x40309051715
W21x41044705131
W18x41541602196
W16x41541603678
W14x40753292996
W12x41218406196
W24x40711048515
W21x41450533931
W18x41949902196
W16x41949903678
W14x41157489596
W12x41625206196
W24x41115045315
W21x41858362731
W18x42360202196
W16x42360203678
W14x41563686196
W12x42034006196
W24x41521042115
W21x42268191531
W18x42772502196
W16x42772503678
W14x41971882796
W12x42444806196
W24x41929038915
W21x42680020331
W18x43186802196
W16x43186803678
W14x42382079396
W12x42857606196
W24x42339035715
W21x43093849131
W18x43603102196
W16x43603103678
W14x42794275996
W12x43272406196
W24x42751032515
W21x43509677931
W18x44021402196
W16x44021403678
W14x43208472596
W12x43689206196
W24x43165029315
W21x43927506731
W18x44441702196
W16x44441703678
W14x43624669196
W12x44108006196
W24x43581026115
W21x44347335531
W18x44864002196
W16x44864003678
W14x44042865796
W12x44530806196
W24x43999022915
W21x44769164331
W18x45288302196
W16x45288303678
W14x44463062396
W12x44955606196
W24x44419019715
W21x45192993131
W18x45715602196
W16x45715603678
W14x44885258996
W12x45382406196
W24x44841016515
W21x45618821931
W18x46144902196
W16x46144903678
W14x45309455596
W12x45811206196
W24x45265013315
W21x46046650731
W18x46576202196
W16x46576203678
W14x45735652196
W12x46242006196
W24x45691010115
W21x46476479531
W18x47009502196
W16x47009503678
W14x46163848796
W12

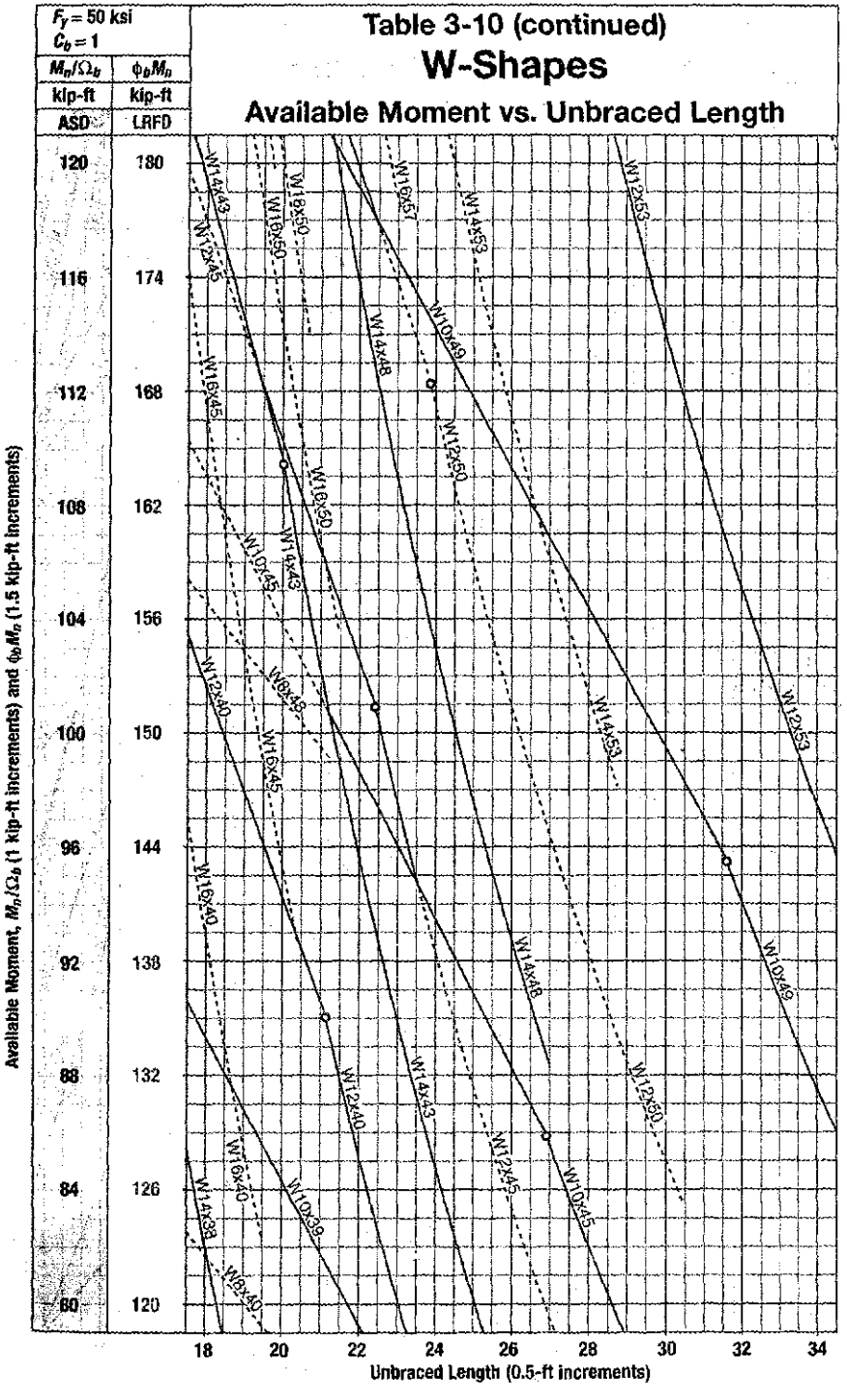
$F_y = 50$ ksi
$C_b = 1$
Table 3-10 (continued)
W-Shapes
Available Moment vs. Unbraced Length
M_n/Ω_b kip-ft ASD
$\phi_b M_n$ kip-ft LRFD
120 180
116 174
112 168
108 162
104 156
100 150
96 144
92 138
88 132
84 126
80 120
Available Moment, M_n/Ω_b (1 kip-ft increments) and $\phi_b M_n$ (1.5 kip-ft increments)
18 20 22 24 26 28 30 32 34
Unbraced Length (0.5-ft increments)
W14x43
W12x45
W18x50
W16x50
W18x57
W14x53
W12x53
W14x48
W10x49
W16x45
W12x50
W10x45
W14x43
W12x40
W8x48
W16x40
W14x38
W10x39
W8x40

Table 3-10 (continued)

W-Shapes

Available Moment vs. Unbraced Length

$F_y = 50$ ksi
$C_b = 1$

M_n/Ω_b	$\phi_b M_n$
kip-ft	kip-ft
ASD	LRFD
80	120
76	114
72	108
68	102
64	96
60	90
56	84
52	78
48	72
44	66
40	60

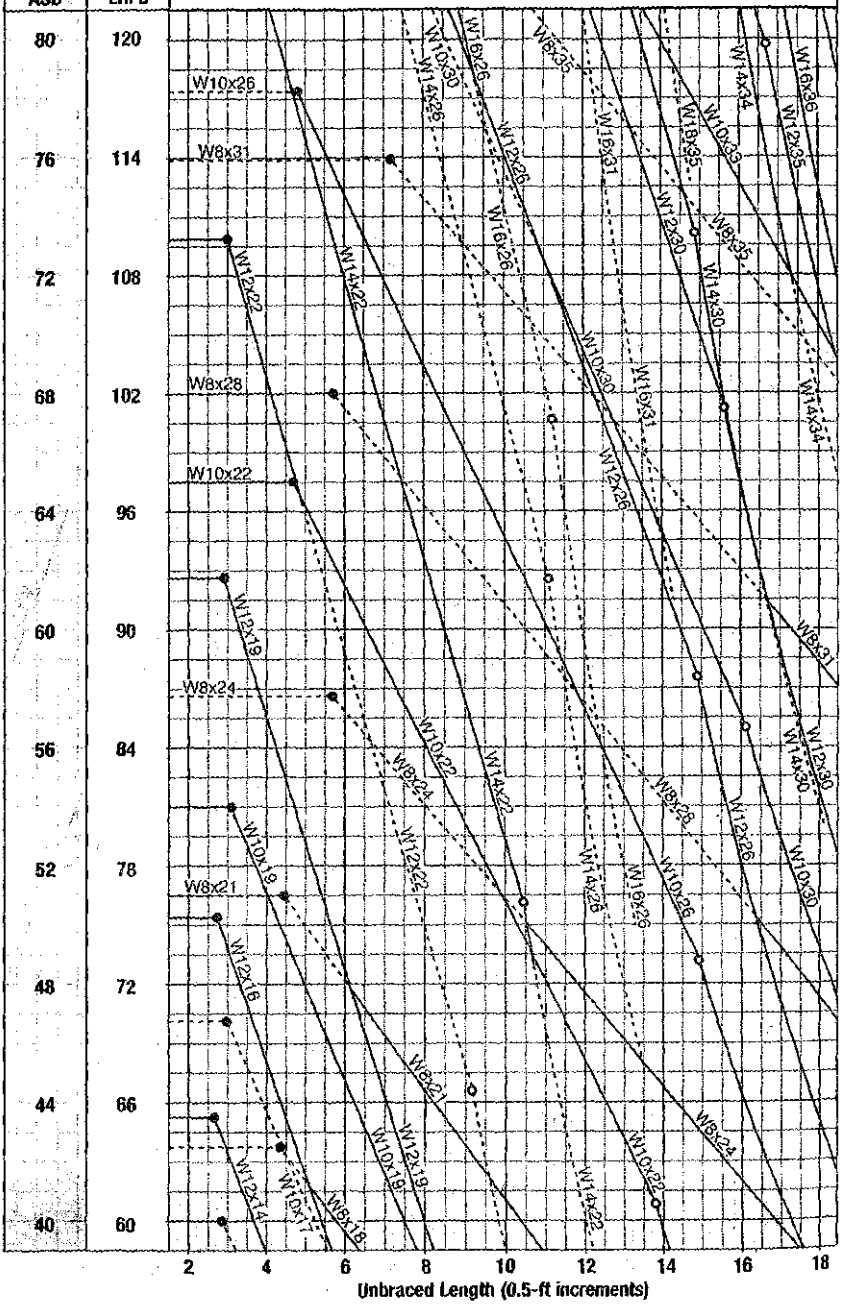

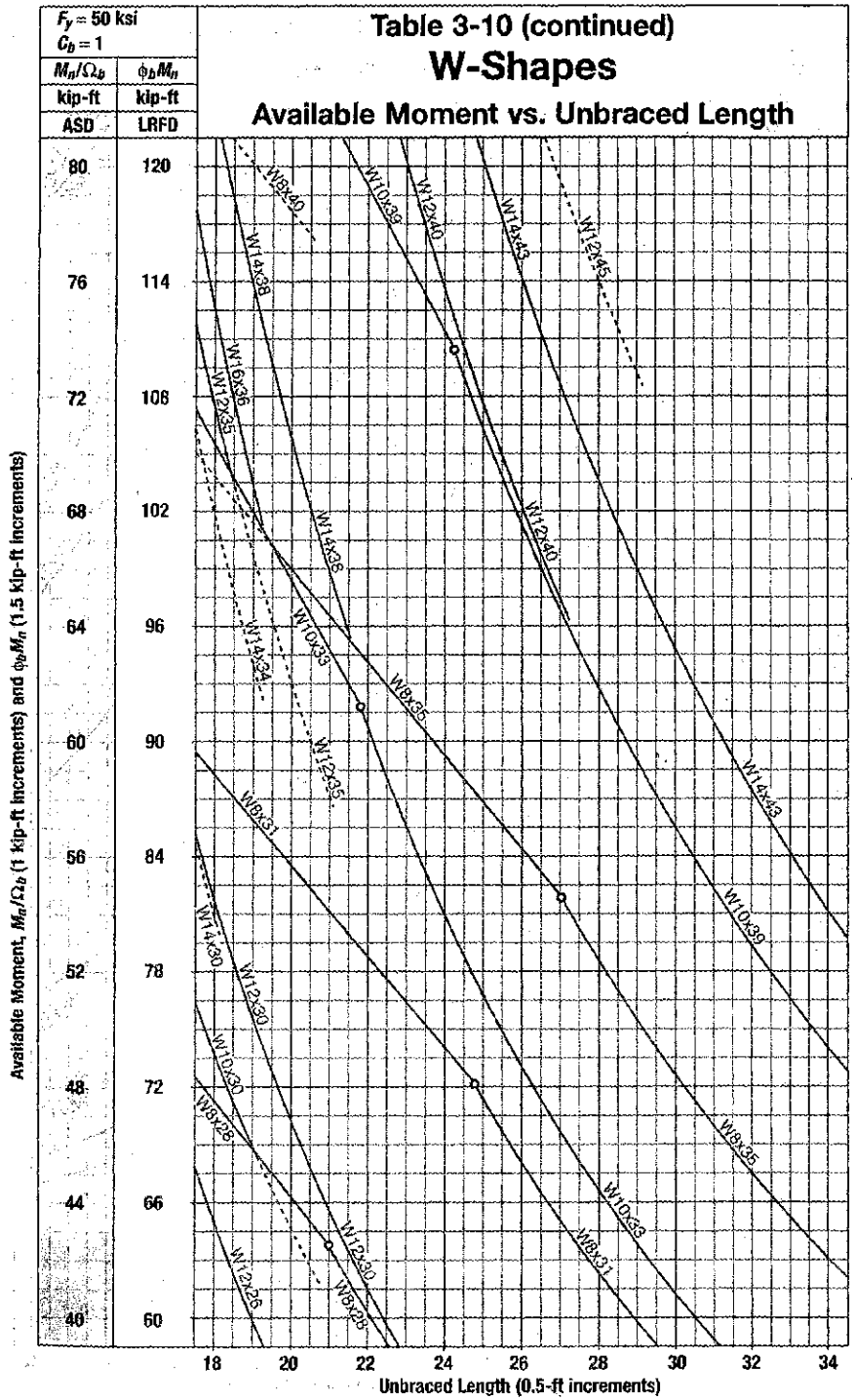
Table 3-10 (continued)
W-Shapes
Available Moment vs. Unbraced Length
F_y = 50 ksi
C_b = 1
M_n/Ω_b kip-ft ASD
$\phi_b M_n$ kip-ft LRFD
80 120
76 114
72 108
68 102
64 96
60 90
56 84
52 78
48 72
44 66
40 60
W8x40
W10x39
W12x40
W14x43
W12x45
W14x38
W16x36
W12x35
W14x38
W12x40
W10x33
W14x34
W8x35
W12x35
W8x31
W14x30
W12x30
W10x30
W8x28
W12x30
W12x26
W8x28
W14x43
W10x39
W8x35
W10x33
W8x31
Available Moment, M_n/Ω_b (1 kip-ft increments) and $\phi_b M_n$ (1.5 kip-ft increments)
18 20 22 24 26 28 30 32 34
Unbraced Length (0.5-ft increments)

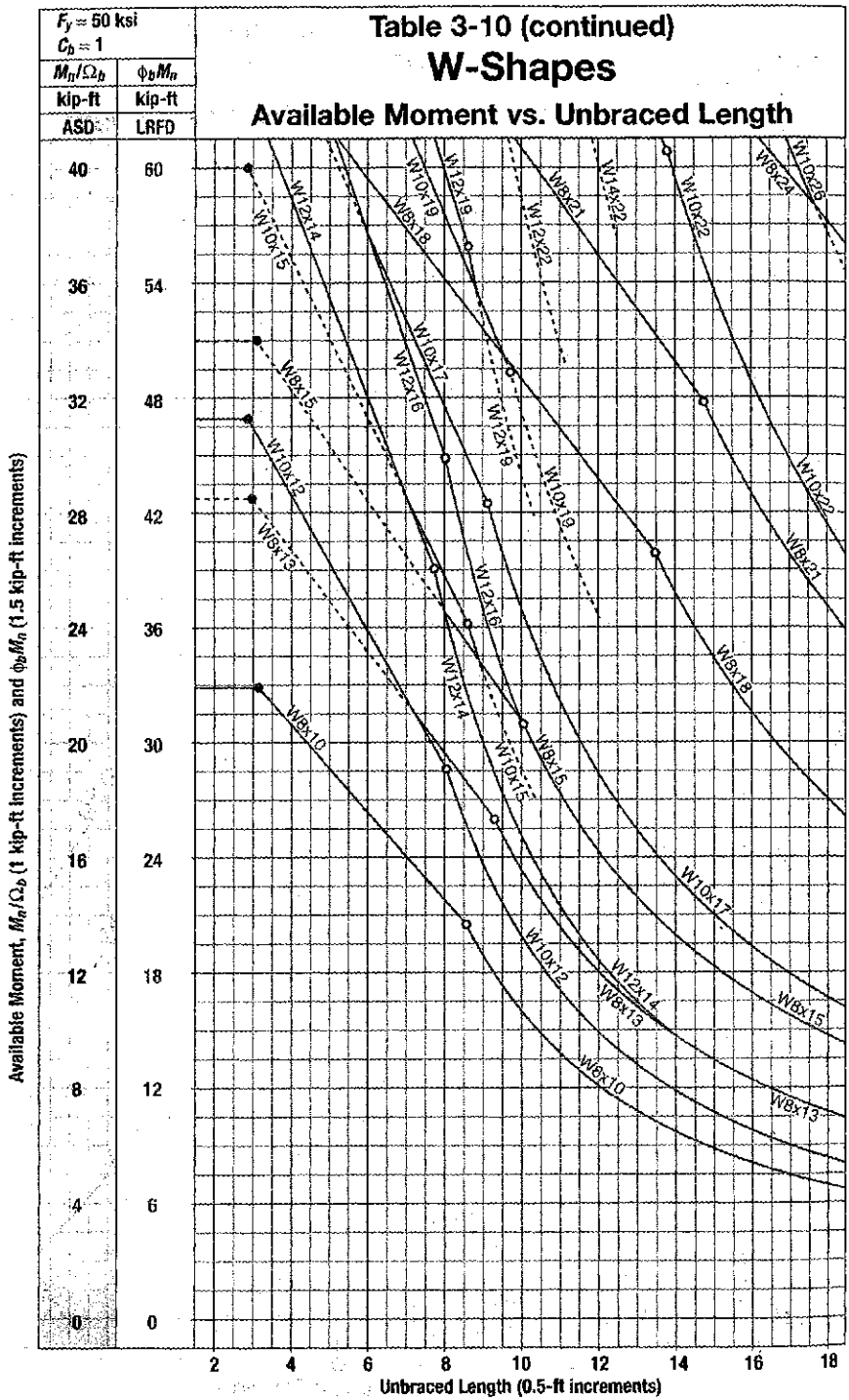
F_y = 50 ksi
C_b = 1
Table 3-10 (continued)
W-Shapes
Available Moment vs. Unbraced Length
M_n/Ω_b kip-ft ASD
$\phi_b M_n$ kip-ft LRFD
40 60
36 54
32 48
28 42
24 36
20 30
16 24
12 18
8 12
4 6
0 0
Available Moment, M_n/Ω_b (1 kip-ft increments) and $\phi_b M_n$ (1.5 kip-ft increments)
2 4 6 8 10 12 14 16 18
Unbraced Length (0.5-ft increments)
W10x15
W12x14
W10x19
W8x18
W12x19
W8x21
W14x22
W10x22
W8x24
W10x26
W8x15
W10x17
W12x16
W12x22
W10x20
W10x12
W8x13
W10x19
W8x10
W12x14
W10x15

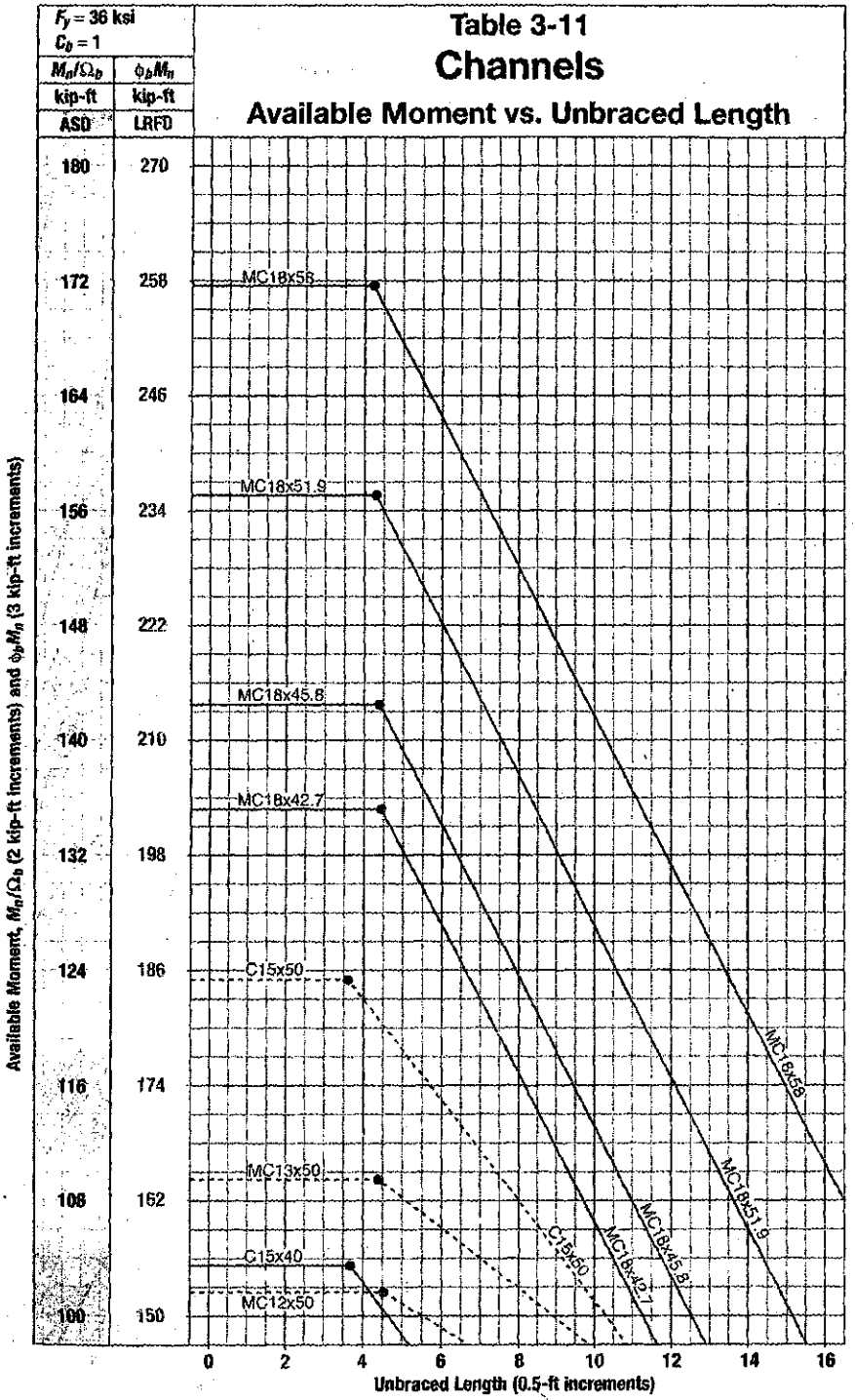
F_y = 36 ksi
C_b = 1
Table 3-11
Channels
Available Moment vs. Unbraced Length
M_n/Ω_b kip-ft ASD
$\phi_b M_n$ kip-ft LRFD
180 270
172 258
164 246
156 234
148 222
140 210
132 198
124 186
116 174
108 162
100 150
MC18x58
MC18x51.9
MC18x45.8
MC18x42.7
C15x50
MC13x50
C15x40
MC12x50
Available Moment, M_n/Ω_b (2 kip-ft increments) and $\phi_b M_n$ (3 kip-ft increments)
0 2 4 6 8 10 12 14 16
Unbraced Length (0.5-ft increments)

Table 3-11 (continued)
Channels
Available Moment vs. Unbraced Length

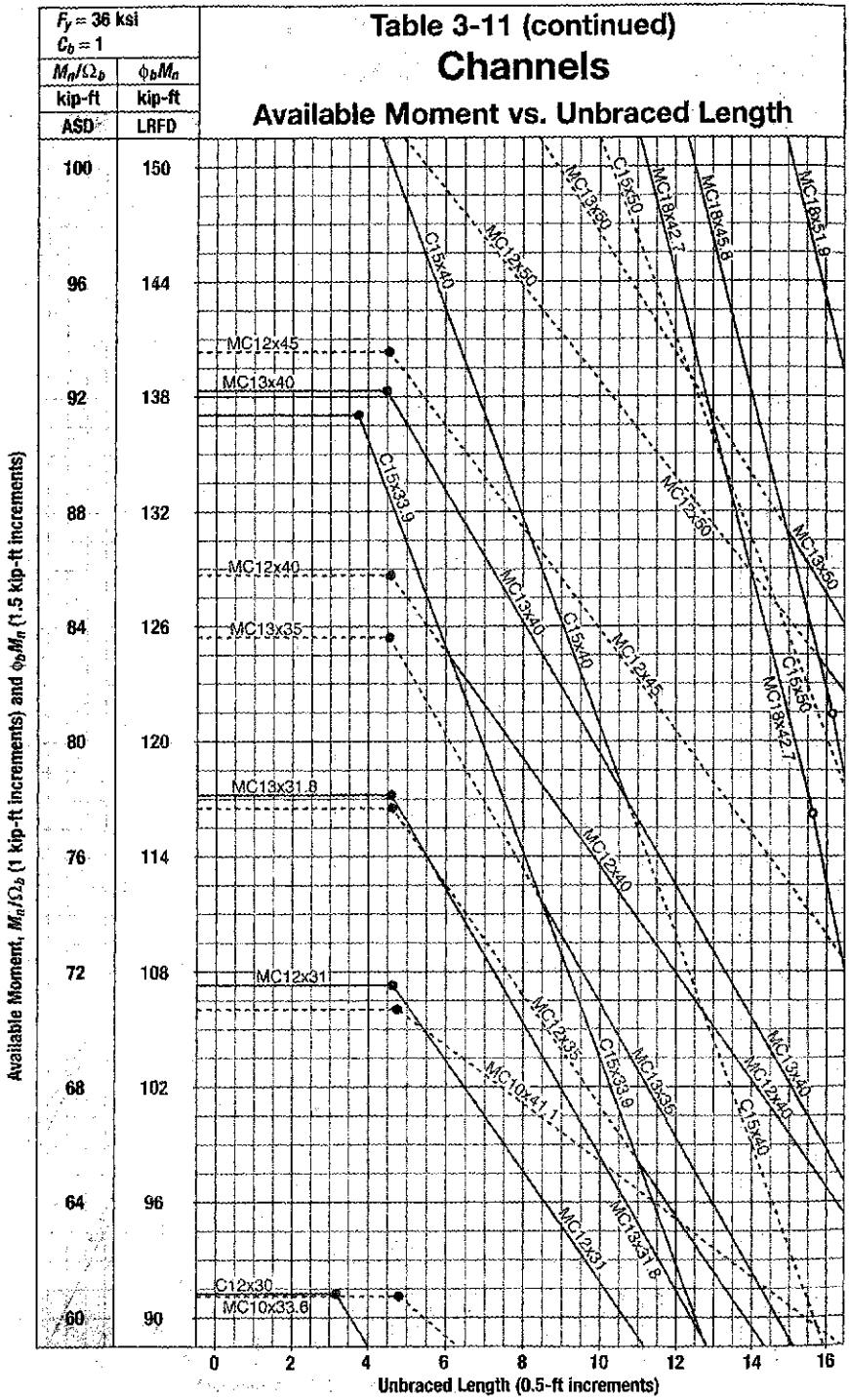

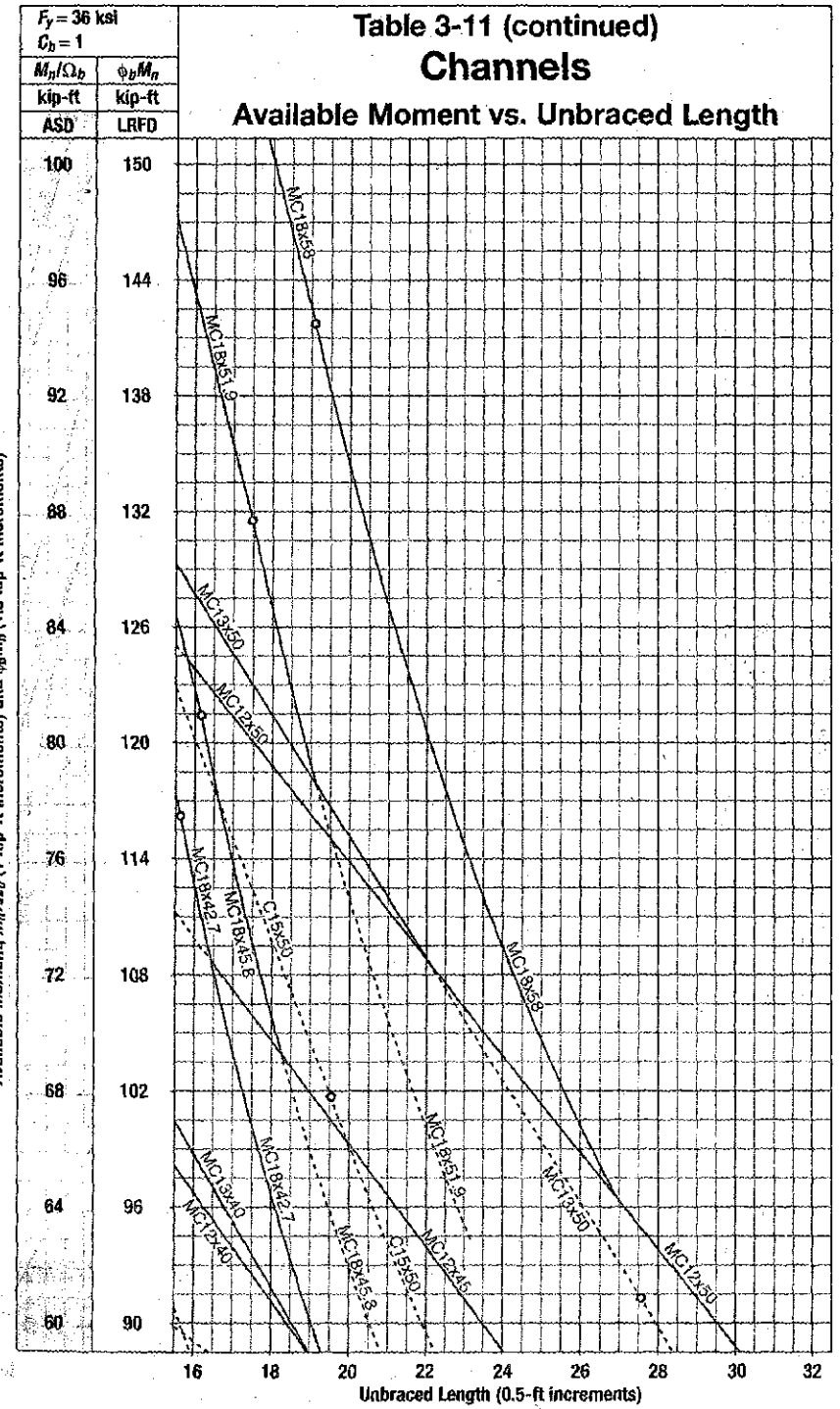
Table 3-11 (continued)
Channels
Available Moment vs. Unbraced Length
F_y = 36 ksi
C_b = 1
M_n/Ω_b kip-ft ASD
$\phi_b M_n$ kip-ft LRFD
100 150
96 144
92 138
88 132
84 126
80 120
76 114
72 108
68 102
64 96
60 90
MC18x58
MC18x51.9
MC13x50
MC12x50
MC18x42.7
MC18x45.8
C15x50
MC13x40
MC12x40
MC12x45
C15x40
MC12x30
16 18 20 22 24 26 28 30 32
Unbraced Length (0.5-ft increments)
Available Moment, M_n/Ω_b (1 kip-ft increments) and $\phi_b M_n$ (1.5 kip-ft increments)

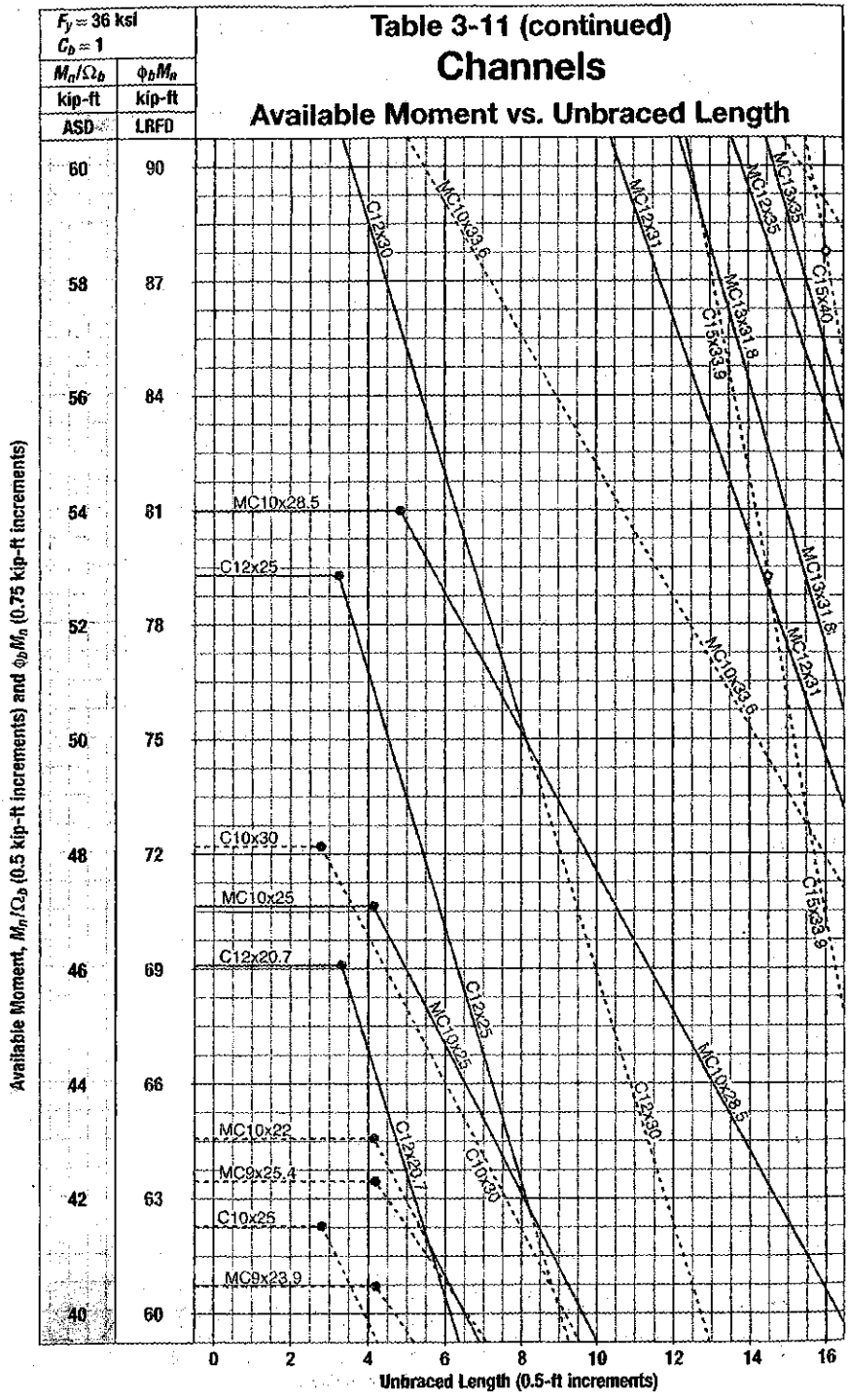
Table 3-11 (continued)
Channels
Available Moment vs. Unbraced Length
F_y = 36 ksi
C_b = 1
M_n/Ω_b kip-ft ASD
$\phi_b M_n$ kip-ft LRFD
60 90
58 87
56 84
54 81
52 78
50 75
48 72
46 69
44 66
42 63
40 60
Available Moment, M_n/Ω_b (0.5 kip-ft increments) and $\phi_b M_n$ (0.75 kip-ft increments)
0 2 4 6 8 10 12 14 16
Unbraced Length (0.5-ft increments)
MC10x28.5
C12x25
C10x30
MC10x25
C12x20.7
MC10x22
MC9x25.4
C10x25
MC9x23.9
C12x30
C12x25
MC10x33.6
C12x30
C12x31
MC13x35
MC12x35
C15x40
MC13x31.8
C15x33.9
MC13x31.8
MC12x31
MC10x28.5
C15x33.9
C12x30
MC10x25
C10x30
C12x20.7

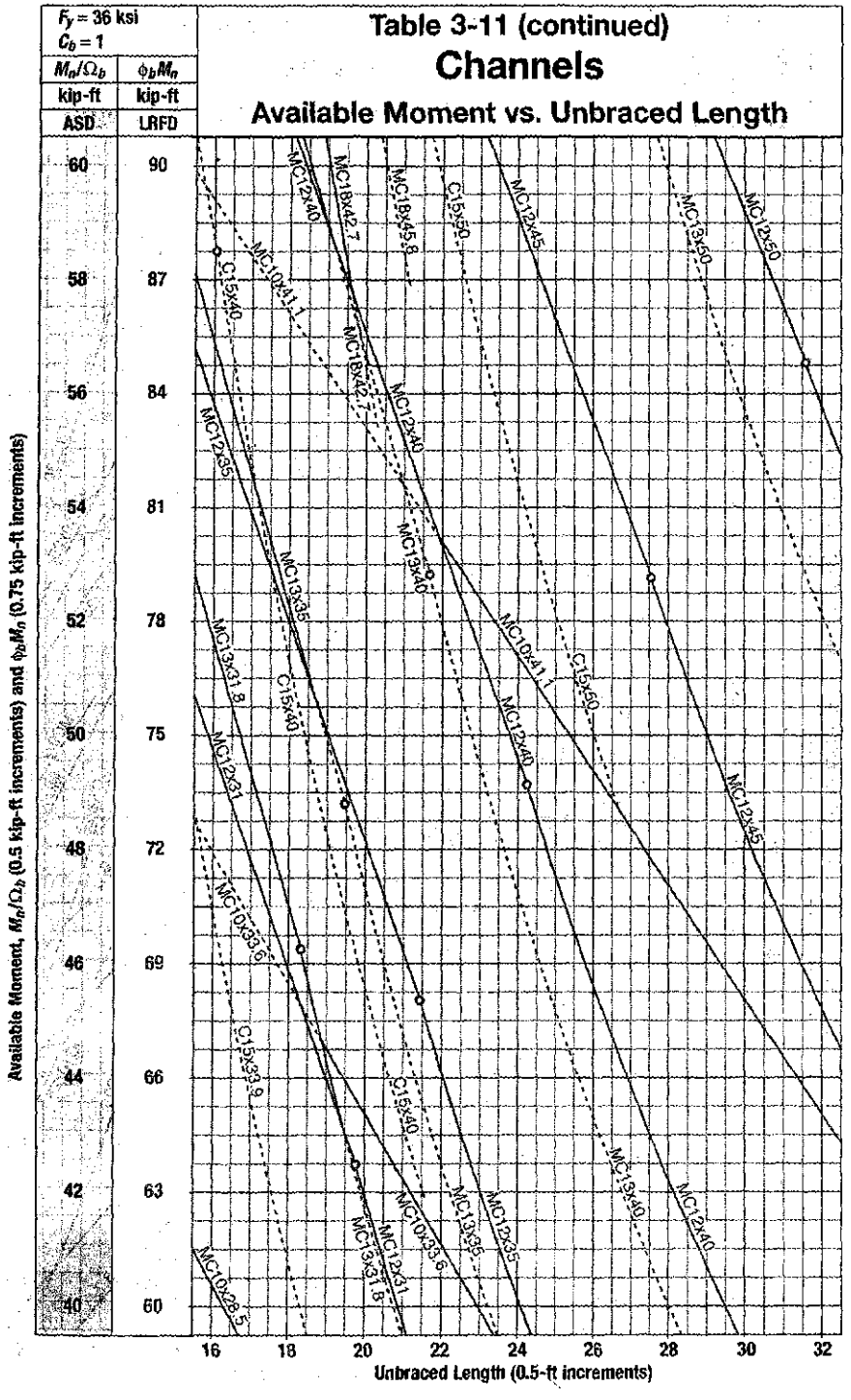
Table 3-11 (continued)
Channels
Available Moment vs. Unbraced Length
F_y = 36 ksi
C_b = 1
M_n/Ω_b kip-ft ASD
$\phi_b M_n$ kip-ft LRFD
60 90
58 87
56 84
54 81
52 78
50 75
48 72
46 69
44 66
42 63
40 60
MC12x40
MC18x42.7
MC18x45.8
C15x50
MC12x45
MC13x50
MC12x50
C15x40
MC10x41.1
MC18x42.7
MC12x40
MC12x35
MC13x40
MC13x35
MC10x41.1
C15x50
MC13x31.8
C15x40
MC12x40
MC12x31
MC12x35
MC10x33.6
C15x33.9
C15x40
MC13x40
MC10x33.6
MC13x35
MC12x40
MC12x35
MC12x31
MC13x31.8
MC10x28.5
16 18 20 22 24 26 28 30 32
Unbraced Length (0.5-ft increments)
Available Moment, M_n/Ω_b (0.5 kip-ft increments) and $\phi_b M_n$ (0.75 kip-ft increments)

Table 3-11 (continued)
Channels
Available Moment vs. Unbraced Length

$F_y = 36$ ksi
$C_b = 1$

M_n/Ω_b kip-ft ASD	$\phi_b M_n$ kip-ft LRFD
40	60
38	57
36	54
34	51
32	48
30	45
28	42
26	39
24	36
22	33
20	30

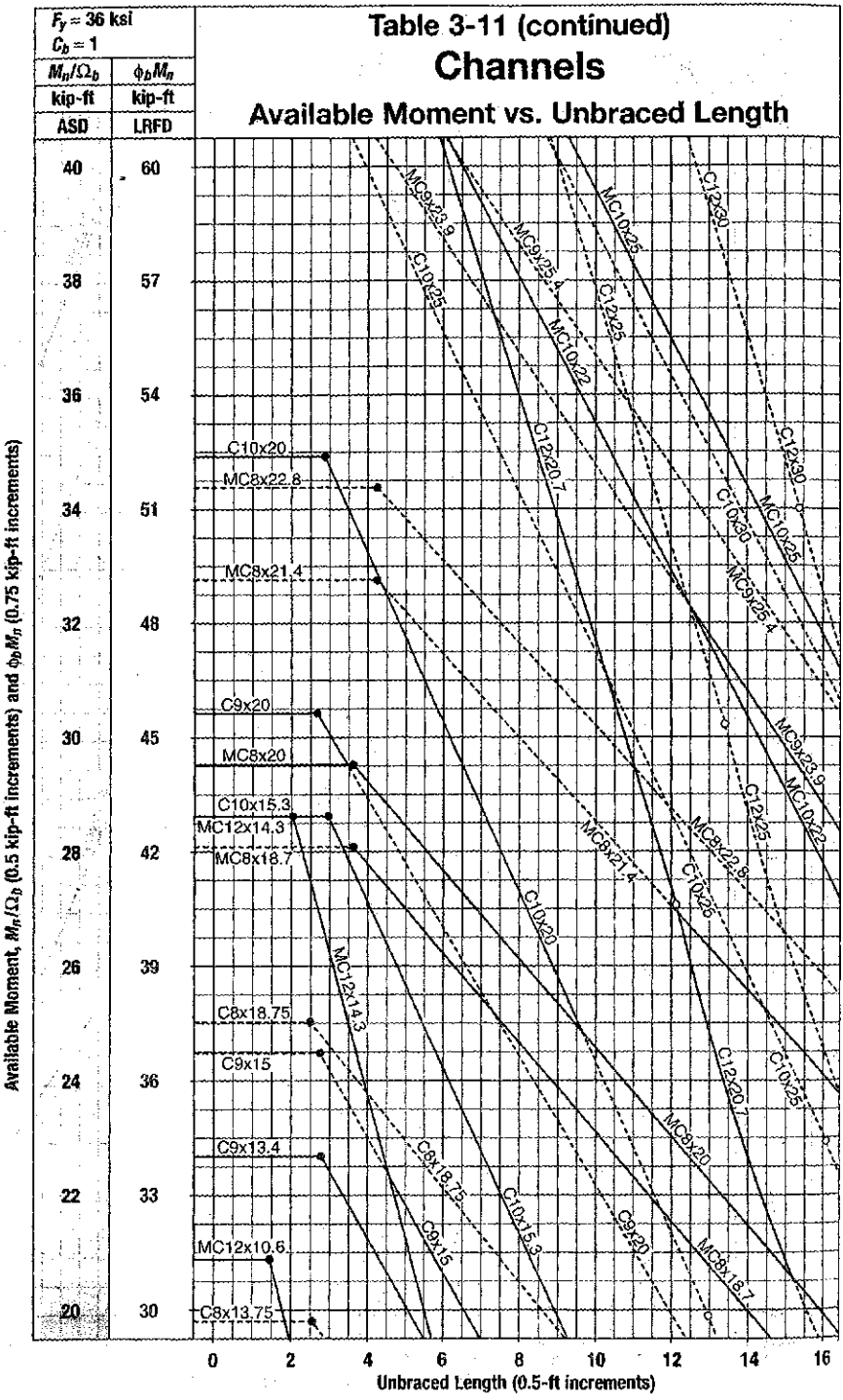

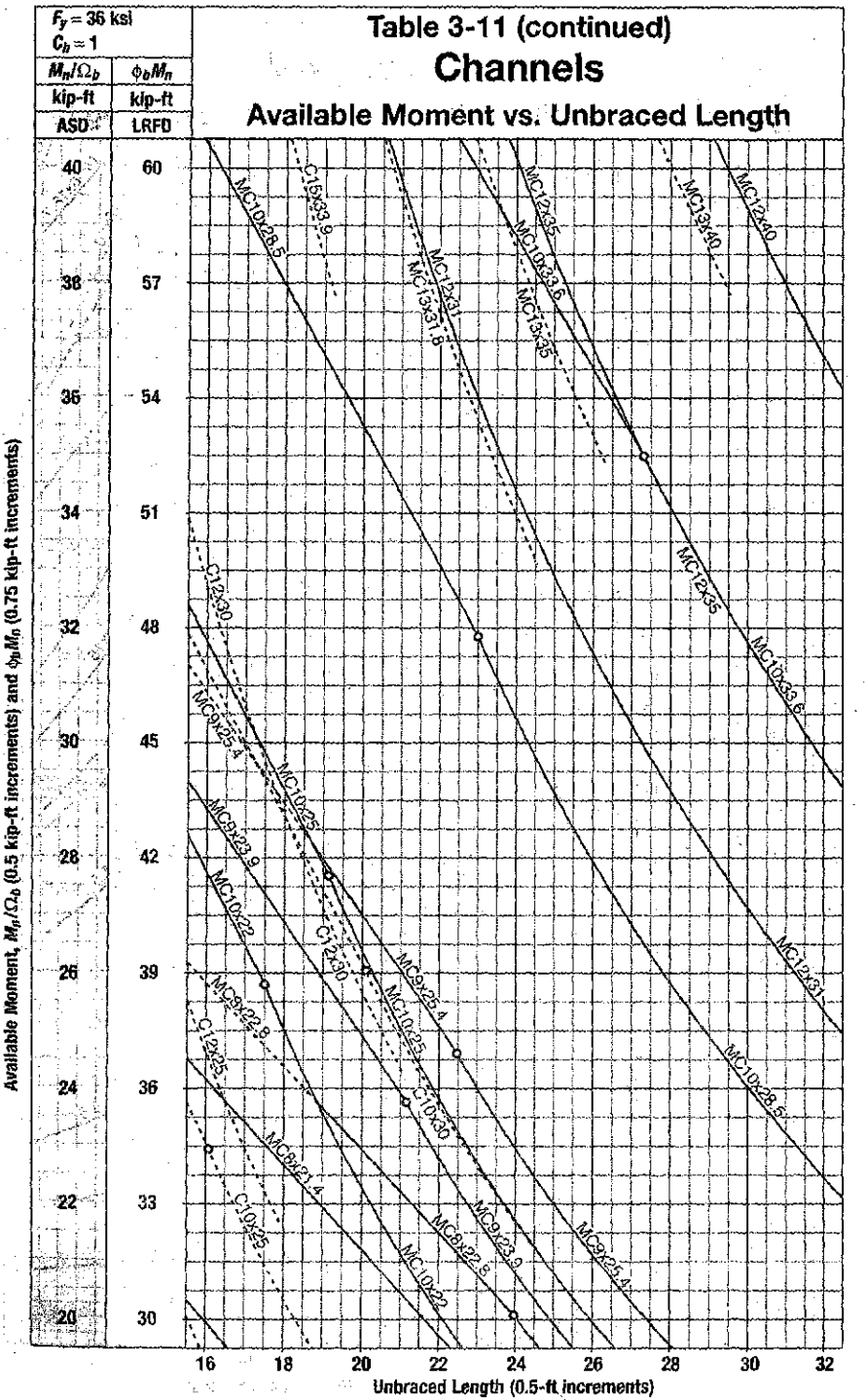
Table 3-11 (continued)
Channels
Available Moment vs. Unbraced Length
F_y = 35 ksi
C_b = 1
M_n/Ω_b kip-ft ASD
$\phi_b M_n$ kip-ft LRFD
Available Moment, M_n/Ω_b (0.5 kip-ft increments) and $\phi_b M_n$ (0.75 kip-ft increments)
Unbraced Length (0.5-ft increments)
C15x33.9
MC10x28.5
MC12x31
MC13x31.8
MC12x35
MC10x33.6
MC13x35
MC13x40
MC12x40
MC12x35
MC10x33.6
C12x30
MC9x25.4
MC10x25
MC9x23.9
MC10x22
C12x30
MC9x25.4
MC10x25
MC12x31
MC10x28.5
C12x25
C10x30
MC8x21.4
C10x25
MC9x23.9
MC8x22.8
MC9x25.4
MC10x22

Table 3-11 (continued)

Channels

Available Moment vs. Unbraced Length

$F_y = 36$ ksi
$C_b = 1$

M_n/Ω_b kip-ft ASD	$\phi_b M_n$ kip-ft LRFD
20	30
18	27
16	24
14	21
12	18
10	15
8	12
6	9
4	6
2	3
0	0

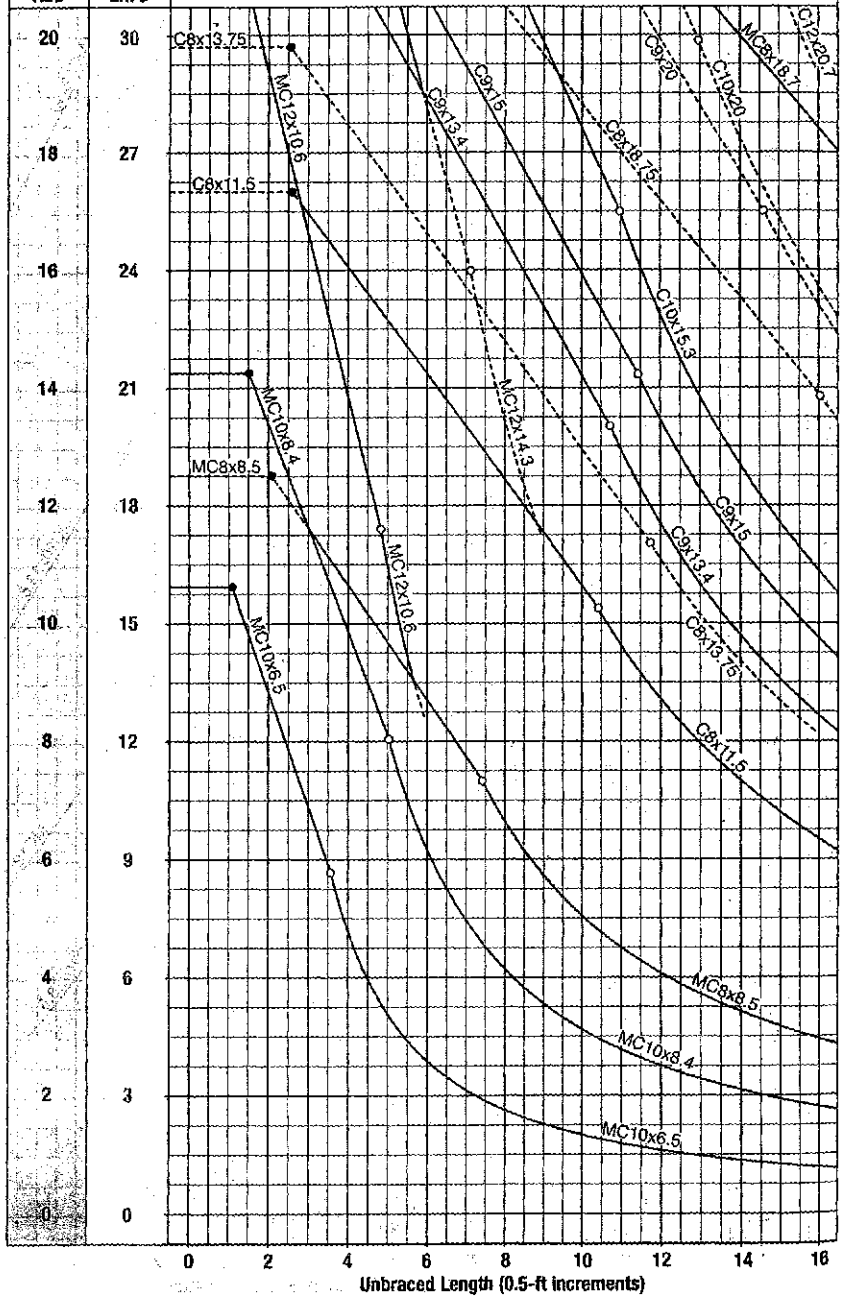

F_y = 46 ksi

Table 3-12
Available Flexural Strength, kip-ft
Rectangular HSS

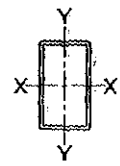

HSS20-HSS12

Shape		X-Axis M_n/Ω_b ASD	X-Axis $\phi_b M_n$ LRFD	Y-Axis M_n/Ω_b ASD	Y-Axis $\phi_b M_n$ LRFD
HSS20×12×	5/8	528	794	350	527
	1/2	432	649	254	382
	3/8	305	459	169	255
	5/16	226	339	130	196
HSS20×8×	5/8	425	638	209	314
	1/2	349	524	152	229
	3/8	269	404	101	152
	5/16	223	336	76.8	115
HSS20×4×	1/2	264	397	62.7	94.3
	3/8	205	308	42.2	63.4
	5/16	171	257	32.1	48.3
	1/4	131	198	22.8	34.3
HSS18×6×	5/8	310	466	140	210
	1/2	257	386	102	153
	3/8	198	298	68.0	102
	5/16	168	252	52.2	78.5
	1/4	132	198	37.3	56.1
HSS16×12×	5/8	379	569	310	466
	1/2	310	466	240	360
	3/8	221	333	159	238
	5/16	166	249	123	185
HSS16×8×	5/8	296	445	182	273
	1/2	243	366	142	213
	3/8	188	283	94.3	142
	5/16	159	240	73.0	110
	1/4	119	178	52.6	79.1
HSS16×4×	5/8	213	321	74.6	112
	1/2	177	267	58.8	88.3
	3/8	138	208	39.4	59.2
	5/16	117	176	30.4	45.7
	1/4	94.3	142	21.8	32.8
	3/16	66.9	100	13.9	20.9
HSS14×10×	5/8	275	414	218	328
	1/2	227	341	180	271
	3/8	175	263	120	180
	5/16	137	207	93.2	140
	1/4	97.3	146	68.2	103
HSS14×6×	5/8	204	306	111	167
	1/2	169	254	92.7	139
	3/8	131	198	62.6	94.2
	5/16	112	168	48.7	73.2
	1/4	90.9	137	35.2	53.0
	3/16	62.7	94.3	22.8	34.2
HSS14×4×	5/8	168	252	65.4	98.3
	1/2	140	211	55.4	83.3
	3/8	110	165	37.5	56.3
	5/16	93.3	140	29.2	43.9
	1/4	76.2	115	21.1	31.8
	3/16	55.4	83.2	13.6	20.4
HSS12×10×	1/2	181	272	160	240
	3/8	140	211	116	175
	5/16	111	166	88.7	133
	1/4	78.9	119	65.5	98.5
HSS12×8×	5/8	188	283	142	214
	1/2	156	235	118	178
	3/8	122	183	86.8	130
	5/16	103	155	66.3	99.7
	1/4	77.8	117	48.8	73.4
	3/16	50.0	75.2	32.1	48.3
HSS12×6×	5/8	158	237	96.6	145
	1/2	132	198	80.9	122
	3/8	103	155	59.9	90.1
	5/16	87.5	132	46.1	69.4
	1/4	71.4	107	33.8	50.8
	3/16	49.6	74.6	22.0	33.1
HSS12×4×	5/8	127	192	56.3	84.6
	1/2	107	161	47.9	71.9
	3/8	84.2	127	35.8	53.8
	5/16	71.9	108	27.7	41.6
	1/4	58.8	88.4	20.3	30.5
	3/16	44.3	66.6	13.1	19.7
HSS12×3½×	3/8	79.6	120	30.2	45.4
	5/16	67.9	102	23.4	35.1

ASD	LRFD
Ω_b = 1.67	ϕ_b = 0.90

Note: Values are reduced for compactness criteria, when appropriate. See Table 1-12A for limiting dimensions for compactness.

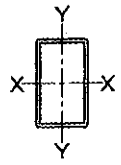

HSS12-HSS8

Table 3-12 (continued)
Available Flexural Strength, kip-ft
Rectangular HSS

F_y = 46 ksi

Shape		X-Axis		Y-Axis	
		M_n/Ω_b	$\phi_b M_n$	M_n/Ω_b	$\phi_b M_n$
		ASD	LRFD	ASD	LRFD
HSS12×3×	5/16	64.0	96.2	19.2	28.8
	1/4	52.5	79.0	14.1	21.2
	3/16	39.6	59.5	9.15	13.7
HSS12×2×	5/16	56.2	84.5	11.2	16.8
	1/4	46.3	69.5	8.37	12.6
	3/16	34.9	52.4	5.48	8.24
HSS10×8×	5/8	143	215	122	184
	1/2	119	178	102	153
	3/8	93.0	140	79.8	120
	5/16	79.0	119	63.8	95.9
	1/4	60.0	90.2	46.1	69.2
	3/16	39.0	58.6	30.7	46.2
HSS10×6×	5/8	118	177	82.1	123
	1/2	98.7	148	69.1	104
	3/8	77.5	116	54.4	81.8
	5/16	66.1	99.3	43.9	65.9
	1/4	54.1	81.3	31.8	47.9
	3/16	37.9	57.0	21.1	31.7
HSS10×5×	3/8	69.8	105	42.9	64.5
	5/16	59.6	89.5	34.7	52.2
	1/4	48.8	73.4	25.3	38.0
	3/16	37.3	56.1	16.7	25.1
HSS10×4×	5/8	92.6	139	47.2	70.9
	1/2	78.3	118	40.3	60.6
	3/8	62.0	93.2	32.2	48.4
	5/16	53.1	79.8	26.1	39.3
	1/4	43.6	65.5	19.1	28.7
	3/16	33.4	50.2	12.6	18.9
	1/8	20.7	31.1	6.84	10.3
HSS10×3½	1/2	73.2	110	33.8	50.8
	3/8	58.2	87.4	27.2	40.8
	5/16	49.8	74.9	22.1	33.2
	1/4	41.0	61.6	16.1	24.3
	3/16	31.5	47.3	10.6	16.0
	1/8	20.3	30.5	5.75	8.65
HSS10×3×	3/8	54.3	81.6	22.3	33.6
	5/16	46.6	70.0	18.1	27.3
	1/4	38.4	57.7	13.3	20.0
	3/16	29.5	44.3	8.75	13.2
	1/8	19.0	28.5	4.72	7.10
HSS10×2×	3/8	46.6	70.0	13.2	19.9
	5/16	40.1	60.3	10.8	16.2
	1/4	33.2	49.8	7.86	11.8
	3/16	25.6	38.4	5.25	7.89
	1/8	16.8	24.6	2.83	4.25
HSS9×7×	5/8	111	167	93.0	140
	1/2	92.9	140	78.1	117
	3/8	72.9	110	61.4	92.3
	5/16	62.2	93.4	52.4	78.7
	1/4	50.9	76.5	37.3	56.0
	3/16	32.3	48.6	25.0	37.6
HSS9×5×	5/8	88.3	133	58.1	87.3
	1/2	74.7	112	49.3	74.1
	3/8	59.1	88.8	39.2	58.9
	5/16	50.5	75.9	33.6	50.5
	1/4	41.5	62.4	24.3	36.5
	3/16	31.8	47.8	16.2	24.3
HSS9×3×	1/2	56.4	84.8	24.8	37.3
	3/8	45.2	67.9	20.2	30.4
	5/16	38.9	58.5	17.5	26.3
	1/4	32.1	48.3	12.7	19.1
	3/16	24.7	37.2	8.50	12.8
HSS8×6×	5/8	82.8	124	67.7	102
	1/2	69.9	105	57.3	86.1
	3/8	55.3	83.1	45.4	68.2
	5/16	47.3	71.1	38.8	58.4
	1/4	38.8	58.4	30.1	45.2
	3/16	27.5	41.4	19.7	29.7

ASD	LRFD
Ω_b = 1.67	ϕ_b = 0.90

Note: Values are reduced for compactness criteria, when appropriate. See Table 1-12A for limiting dimensions for compactness.

F_y = 46 ksi

Table 3-12 (continued)
Available Flexural Strength, kip-ft
Rectangular HSS

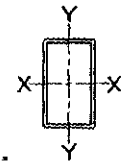

HSS8-HSS5

Shape		X-Axis		Y-Axis		Shape		X-Axis		Y-Axis	
		M_n/Ω_b	$\phi_b M_n$	M_n/Ω_b	$\phi_b M_n$			M_n/Ω_b	$\phi_b M_n$	M_n/Ω_b	$\phi_b M_n$
		ASD	LRFD	ASD	LRFD			ASD	LRFD	ASD	LRFD
HSS8×4×	5/8	63.0	94.7	38.1	57.2	HSS7×2×	1/4	17.5	26.4	6.94	10.4
	1/2	53.8	80.9	32.8	49.3		3/16	13.7	20.5	4.67	7.01
	3/8	43.0	64.7	26.4	39.6		1/8	9.49	14.3	2.63	3.95
	5/16	37.0	55.6	22.7	34.2	HSS6×5×	1/2	39.5	59.4	34.8	52.3
	1/4	30.5	45.9	17.8	26.7		3/8	31.8	47.8	28.0	42.1
	3/16	23.5	35.3	11.8	17.7		5/16	27.4	41.2	24.2	36.3
	1/8	14.7	22.1	6.53	9.82		1/4	22.7	34.1	20.0	30.1
HSS8×3×	1/2	45.8	68.8	22.1	33.3		3/16	17.5	26.3	14.5	21.8
	3/8	36.9	55.5	18.1	27.2		1/8	9.80	14.7	8.12	12.2
	5/16	31.9	47.9	15.7	23.6	HSS6×4×	1/2	33.6	50.5	25.2	37.9
	1/4	26.4	39.6	12.3	18.6		3/8	27.3	41.0	20.5	30.8
	3/16	20.4	30.6	8.19	12.3		5/16	23.6	35.4	17.8	26.7
	1/8	13.8	20.8	4.52	6.79		1/4	19.6	29.4	14.8	22.2
HSS8×2×	3/8	30.8	46.3	10.6	15.9		3/16	15.2	22.8	10.8	16.2
	5/16	26.7	40.1	9.33	14.0		1/8	9.65	14.5	6.07	9.12
	1/4	22.2	33.4	7.37	11.1	HSS6×3×	1/2	27.7	41.7	16.7	25.1
	3/16	17.2	25.9	4.90	7.37		3/8	22.7	34.2	13.8	20.8
	1/8	11.7	17.6	2.71	4.07		5/16	19.8	29.7	12.1	18.2
HSS7×5×	1/2	50.2	75.4	39.6	59.6		1/4	16.5	24.8	10.1	15.2
	3/8	40.1	60.2	31.7	47.7		3/16	12.8	19.3	7.46	11.2
	5/16	34.4	51.8	27.3	41.1		1/8	8.89	13.4	4.20	6.31
	1/4	28.4	42.7	22.6	33.9	HSS6×2×	3/8	18.2	27.4	7.94	11.9
	3/16	21.8	32.8	14.9	22.4		5/16	16.0	24.0	7.05	10.6
	1/8	12.1	18.2	8.47	12.7		1/4	13.4	20.2	5.99	9.01
HSS7×4×	1/2	43.2	64.9	29.0	43.6		3/16	10.5	15.8	4.46	6.70
	3/8	34.7	52.2	23.4	35.2		1/8	7.33	11.0	2.52	3.79
	5/16	30.0	45.0	20.3	30.5	HSS5×4×	1/2	25.1	37.8	21.5	32.2
	1/4	24.8	37.3	16.8	25.3		3/8	20.6	30.9	17.6	26.5
	3/16	19.1	28.7	11.2	16.8		5/16	17.9	26.9	15.3	23.0
	1/8	12.1	18.1	6.33	9.51		1/4	14.9	22.4	12.8	19.2
HSS7×3×	1/2	36.2	54.4	19.4	29.2		3/16	11.6	17.4	9.95	15.0
	3/8	29.4	44.2	16.0	24.0		1/8	7.45	11.2	5.72	8.60
	5/16	25.5	38.3	13.9	20.9						
	1/4	21.2	31.8	11.6	17.4						
	3/16	16.4	24.6	7.80	11.7						
	1/8	11.3	17.0	4.38	6.58						

ASD	LRFD
Ω_b = 1.67	ϕ_b = 0.90

Note: Values are reduced for compactness criteria, when appropriate. See Table 1-12A for limiting dimensions for compactness.

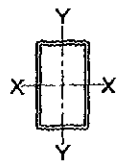

HSS5-HSS2

Table 3-12 (continued)
Available Flexural Strength, kip-ft
Rectangular HSS

F_y = 46 ksi

Shape		X-Axis		Y-Axis	
		M_n/Ω_b	$\phi_b M_n$	M_n/Ω_b	$\phi_b M_n$
		ASD	LRFD	ASD	LRFD
HSS5×3×	1/2	20.3	30.5	14.0	21.1
	3/8	16.8	25.3	11.7	17.6
	5/16	14.7	22.1	10.3	15.4
	1/4	12.4	18.6	8.65	13.0
	3/16	9.66	14.5	6.79	10.2
	1/8	6.73	10.1	3.96	5.95
HSS5×2 1/2×	1/4	11.1	16.7	6.78	10.2
	3/16	8.70	13.1	5.35	8.04
	1/8	6.08	9.14	3.14	4.72
HSS5×2×	3/8	13.1	19.7	6.62	9.95
	5/16	11.6	17.4	5.91	8.88
	1/4	9.81	14.7	5.05	7.59
	3/16	7.74	11.6	4.02	6.04
	1/8	5.43	8.16	2.37	3.57
HSS4×3×	3/8	11.7	17.7	9.58	14.4
	5/16	10.4	15.6	8.47	12.7
	1/4	8.76	13.2	7.17	10.8
	3/16	6.90	10.4	5.66	8.50
	1/8	4.84	7.27	3.73	5.61
HSS4×2 1/2×	3/8	10.3	15.5	7.34	11.0
	5/16	9.12	13.7	6.53	9.82
	1/4	7.75	11.6	5.57	8.37
	3/16	6.13	9.22	4.42	6.65
	1/8	4.32	6.49	2.94	4.42
HSS4×2×	3/8	8.82	13.3	5.30	7.96
	5/16	7.88	11.8	4.76	7.16
	1/4	6.74	10.1	4.10	6.17
	3/16	5.37	8.07	3.29	4.94
	1/8	3.80	5.71	2.21	3.32
HSS3 1/2×2 1/2×	3/8	8.24	12.4	6.48	9.74
	5/16	7.35	11.1	5.79	8.71
	1/4	6.28	9.44	4.96	7.46
	3/16	5.00	7.51	3.96	5.95
	1/8	3.54	5.32	2.81	4.22
HSS3 1/2×2×	1/4	5.41	8.13	3.63	5.46
	3/16	4.33	6.51	2.92	4.40
	1/8	3.09	4.64	2.09	3.15
HSS3 1/2×1 1/2×	1/4	4.53	6.82	2.43	3.65
	3/16	3.67	5.51	1.99	2.99
	1/8	2.64	3.96	1.45	2.17
HSS3×2 1/2×	5/16	5.75	8.65	5.06	7.60
	1/4	4.95	7.44	4.36	6.55
	3/16	3.96	5.96	3.49	5.25
	1/8	2.82	4.24	2.49	3.74
HSS3×2×	5/16	4.85	7.29	3.62	5.45
	1/4	4.21	6.33	3.16	4.75
	3/16	3.40	5.11	2.56	3.85
	1/8	2.44	3.66	1.84	2.77
HSS3×1 1/2×	1/4	3.47	5.21	2.09	3.14
	3/16	2.83	4.26	1.73	2.59
	1/8	2.05	3.09	1.26	1.90
HSS3×1×	3/16	2.27	3.41	0.991	1.49
	1/8	1.67	2.51	0.747	1.12
HSS2 1/2×2×	1/4	3.14	4.73	2.69	4.04
	3/16	2.56	3.86	2.20	3.30
	1/8	1.86	2.79	1.59	2.39
HSS2 1/2×1 1/2×	1/4	2.54	3.81	1.75	2.64
	3/16	2.10	3.16	1.46	2.20
	1/8	1.54	2.31	1.08	1.62
HSS2 1/2×1×	3/16	1.64	2.46	0.826	1.24
	1/8	1.22	1.84	0.629	0.945
HSS2 1/4×2×	3/16	2.19	3.28	2.01	3.03
	1/8	1.59	2.39	1.47	2.20
HSS2×1 1/2×	3/16	1.47	2.20	1.20	1.80
	1/8	1.09	1.64	0.893	1.34
HSS2×1×	3/16	1.10	1.66	0.661	0.994
	1/8	0.840	1.26	0.511	0.768

ASD	LRFD
Ω_b = 1.67	ϕ_b = 0.90

Note: Values are reduced for compactness criteria, when appropriate. See Table 1-12A for limiting dimensions for compactness.

Table 3-13
Available Flexural Strength, kip-ft

F_y = 46 ksi

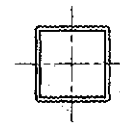

Square HSS — HSS16-HSS2

Shape		M_n/Ω_b ASD	$\phi_b M_n$ LRFD	Shape		M_n/Ω_b ASD	$\phi_b M_n$ LRFD
HSS16×16×	5/8	459	690	HSS5 1/2×5 1/2×	3/8	30.0	45.1
	1/2	352	529		5/16	25.9	38.9
	3/8	232	348		1/4	21.4	32.2
	5/16	181	272		3/16	16.4	24.6
HSS14×14×	5/8	347	521		1/8	8.98	13.5
	1/2	285	428	HSS5×5×	1/2	30.0	45.0
	3/8	185	278		3/8	24.3	36.5
	5/16	145	219		5/16	21.0	31.6
HSS12×12×	5/8	250	376		1/4	17.5	26.2
	1/2	206	309		3/16	13.5	20.3
	3/8	149	223		1/8	7.67	11.5
	5/16	113	169	HSS4 1/2×4 1/2×	1/2	23.4	35.2
	1/4	83.3	125		3/8	19.2	28.8
	3/16	55.7	83.8		5/16	16.7	25.1
HSS10×10×	5/8	168	252		1/4	13.9	20.9
	1/2	139	210		3/16	10.8	16.3
	3/8	108	163		1/8	6.43	9.66
	5/16	86.1	129	HSS4×4×	1/2	17.7	26.6
	1/4	61.6	92.5		3/8	14.7	22.1
	3/16	41.4	62.3		5/16	12.8	19.3
HSS9×9×	5/8	133	200		1/4	10.8	16.2
	1/2	111	167		3/16	8.42	12.7
	3/8	86.8	130		1/8	5.48	8.23
	5/16	73.8	111	HSS3 1/2×3 1/2×	3/8	10.8	16.2
	1/4	51.7	77.8		5/16	9.50	14.3
	3/16	35.0	52.5		1/4	8.03	12.1
	1/8	20.0	30.1		3/16	6.33	9.51
HSS8×8×	5/8	103	154		1/8	4.44	6.67
	1/2	86.0	129	HSS3×3×	3/8	7.46	11.2
	3/8	67.6	102		5/16	6.66	10.0
	5/16	57.6	86.6		1/4	5.69	8.55
	1/4	44.1	66.3		3/16	4.53	6.81
	3/16	28.8	43.3		1/8	3.21	4.82
	1/8	16.5	24.8	HSS2 1/2×2 1/2×	5/16	4.32	6.49
HSS7×7×	5/8	76.9	114		1/4	3.75	5.64
	1/2	64.1	96.4		3/16	3.03	4.55
	3/8	50.7	76.2		1/8	2.17	3.27
	5/16	43.4	65.2	HSS2 1/4×2 1/4×	1/4	2.93	4.41
	1/4	35.6	53.6		3/16	2.39	3.60
	3/16	23.1	34.7		1/8	1.73	2.60
	1/8	13.3	20.0	HSS2×2×	1/4	2.21	3.33
HSS6×6×	5/8	53.2	80.0		3/16	1.83	2.75
	1/2	45.4	68.3		1/8	1.34	2.02
	3/8	36.3	54.6				
	5/16	31.2	46.9				
	1/4	25.7	38.7				
	3/16	18.5	27.8				
	1/8	10.4	15.6				

ASD	LRFD
Ω_b = 1.67	ϕ_b = 0.90

Note: Values are reduced for compactness criteria, when appropriate. See Table 1-12A for limiting dimensions for compactness.

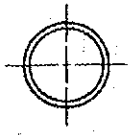

HSS20-
HSS6.625

Table 3-14
Available Flexural Strength, kip-ft
Round HSS

F_y = 42 ksi

Shape		M_n/Ω_b ASD	$\phi_b M_n$ LRFD	Shape		M_n/Ω_b ASD	$\phi_b M_n$ LRFD
HSS20×	0.500	371	558	HSS8.625×	0.625	78.9	119
	0.375[f]	273	410		0.500	65.0	97.6
					0.375	50.1	75.3
HSS18×	0.500	300	450		0.322	43.6	65.5
	0.375[f]	225	338		0.250	34.4	51.7
					0.188[f]	25.9	39.0
HSS16×	0.625	289	435				
	0.500	235	353	HSS7.625×	0.375	38.8	58.2
	0.438	207	312		0.328	34.3	51.5
	0.375	179	269				
	0.312[f]	147	221	HSS7.500×	0.500	48.3	72.6
	0.250[f]	114	171		0.375	37.4	56.3
					0.312	31.7	47.7
HSS14×	0.625	220	331		0.250	25.8	38.8
	0.500	179	268		0.188	19.6	29.4
	0.375	136	205				
	0.312	115	172	HSS7×	0.500	41.7	62.7
	0.250[f]	88.8	133		0.375	32.4	48.7
					0.312	27.5	41.3
HSS12.750×	0.500	147	221		0.250	22.4	33.6
	0.375	113	169		0.188	17.0	25.5
	0.250[f]	74.6	112		0.125[f]	11.0	16.6
HSS10.750×	0.500	103	155	HSS6.875×	0.500	40.1	60.3
	0.375	79.2	119		0.375	31.2	46.9
	0.250	54.0	81.2		0.312	26.5	39.8
					0.250	21.6	32.4
HSS10×	0.625	108	163		0.188	16.4	24.6
	0.500	88.7	133				
	0.375	68.2	102	HSS6.625×	0.500	37.1	55.7
	0.312	57.5	86.4		0.432	32.7	49.1
	0.250	46.6	70.0		0.375	28.8	43.3
	0.188[f]	34.0	51.2		0.312	24.5	36.8
					0.280	22.1	33.2
HSS9.625×	0.500	81.8	123		0.250	20.0	30.0
	0.375	63.0	94.6		0.188	15.2	22.8
	0.312	53.2	79.9		0.125[f]	9.97	15.0
	0.250	43.1	64.8				
	0.188[f]	31.7	47.7				

ASD	LRFD
Ω_b = 1.67	ϕ_b = 0.90

[f] Shape exceeds compact limit for flexure with F_y = 42 ksi.

F_y = 42 ksi

Table 3-14 (continued)
Available Flexural Strength, kip-ft
Round HSS

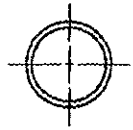

HSS6-HSS1.66

Shape		M_n/Ω_b ASD	$\phi_b M_n$ LRFD	Shape		M_n/Ω_b ASD	$\phi_b M_n$ LRFD
HSS6×	0.500	29.9	45.0	HSS3.500×	0.313	6.30	9.47
	0.375	23.4	35.2		0.300	6.08	9.14
	0.312	19.9	29.9		0.250	5.22	7.85
	0.280	18.0	27.0		0.216	4.59	6.90
	0.250	16.2	24.4		0.203	4.35	6.53
	0.188	12.4	18.6		0.188	4.04	6.07
	0.125[1]	8.30	12.5		0.125	2.79	4.19
HSS5.563×	0.500	25.4	38.2	HSS3×	0.250	3.75	5.63
	0.375	19.9	29.9		0.216	3.31	4.97
	0.258	14.3	21.4		0.203	3.13	4.71
	0.188	10.6	15.9		0.188	2.92	4.38
	0.134	7.69	11.6		0.152	2.42	3.63
					0.134	2.15	3.23
HSS5.500×	0.500	24.8	37.2		0.125	2.02	3.04
	0.375	19.4	29.2				
	0.258	13.9	20.9	HSS2.875×	0.250	3.42	5.14
					0.203	2.86	4.30
HSS5×	0.500	20.1	30.2		0.188	2.66	4.00
	0.375	15.9	23.8		0.125	1.85	2.78
	0.312	13.5	20.4				
	0.258	11.4	17.1	HSS2.500×	0.250	2.52	3.79
	0.250	11.1	16.7		0.188	1.98	2.97
	0.188	8.50	12.8		0.125	1.38	2.08
	0.125	5.80	8.72				
				HSS2.375×	0.250	2.25	3.38
HSS4.500×	0.375	12.6	19.0		0.218	2.01	3.03
	0.337	11.5	17.3		0.188	1.77	2.66
	0.237	8.45	12.7		0.154	1.50	2.25
	0.188	6.83	10.3		0.125	1.24	1.87
	0.125	4.67	7.02				
				HSS1.900×	0.188	1.09	1.64
HSS4×	0.313	8.41	12.6		0.145	0.883	1.33
	0.250	6.94	10.4		0.120	0.746	1.12
	0.237	6.60	9.91				
	0.226	6.33	9.51	HSS1.660×	0.140	0.639	0.961
	0.220	6.19	9.31				
	0.188	5.34	8.03				
	0.125	3.67	5.51				

ASD	LRFD
Ω_b = 1.67	ϕ_b = 0.90

[1] Shape exceeds compact limit for flexure with F_y = 42 ksi.

F_y = 35 ksi

Table 3-15
Pipe
Available Flexural Strength, kip-ft

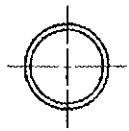

Shape	M_n/Ω_b ASD	$\phi_b M_n$ LRFD	Shape	M_n/Ω_b ASD	$\phi_b M_n$ LRFD
Pipe 12 x-Strong	123	184	Pipe 2½ xx-Strong	5.08	7.64
Pipe 12 Std.	93.8	141	Pipe 2½ x-Strong	3.09	4.64
			Pipe 2½ Std.	2.39	3.59
Pipe 10 x-Strong	86.0	129			
Pipe 10 Std.	64.4	96.8	Pipe 2 xx-Strong	2.79	4.19
			Pipe 2 x-Strong	1.68	2.53
Pipe 8 xx-Strong	87.2	131	Pipe 2 Std.	1.25	1.87
Pipe 8 x-Strong	54.1	81.4			
Pipe 8 Std.	36.3	54.6	Pipe 1½ x-Strong	0.958	1.44
			Pipe 1½ Std.	0.736	1.11
Pipe 6 xx-Strong	47.9	72.0			
Pipe 6 x-Strong	27.3	41.0	Pipe 1¼ x-Strong	0.686	1.03
Pipe 6 Std.	18.5	27.8	Pipe 1¼ Std.	0.533	0.801
Pipe 5 xx-Strong	29.1	43.7	Pipe 1 x-Strong	0.385	0.579
Pipe 5 x-Strong	16.6	24.9	Pipe 1 Std.	0.308	0.463
Pipe 5 Std.	11.9	17.9			
			Pipe ¾ x-Strong	0.207	0.311
Pipe 4 xx-Strong	16.6	24.9	Pipe ¾ Std.	0.164	0.247
Pipe 4 x-Strong	9.65	14.5			
Pipe 4 Std.	7.07	10.6	Pipe ½ x-Strong	0.120	0.180
			Pipe ½ Std.	0.0969	0.146
Pipe 3½ x-Strong	7.11	10.7			
Pipe 3½ Std.	5.30	7.96			
Pipe 3 xx-Strong	8.55	12.8			
Pipe 3 x-Strong	5.08	7.64			
Pipe 3 Std.	3.83	5.75			

ASD	LRFD
Ω_b = 1.67	ϕ_b = 0.90

Table 3-16a
Available Shear Stress, ksi
Tension Field Action NOT Included

F_y = 36 ksi

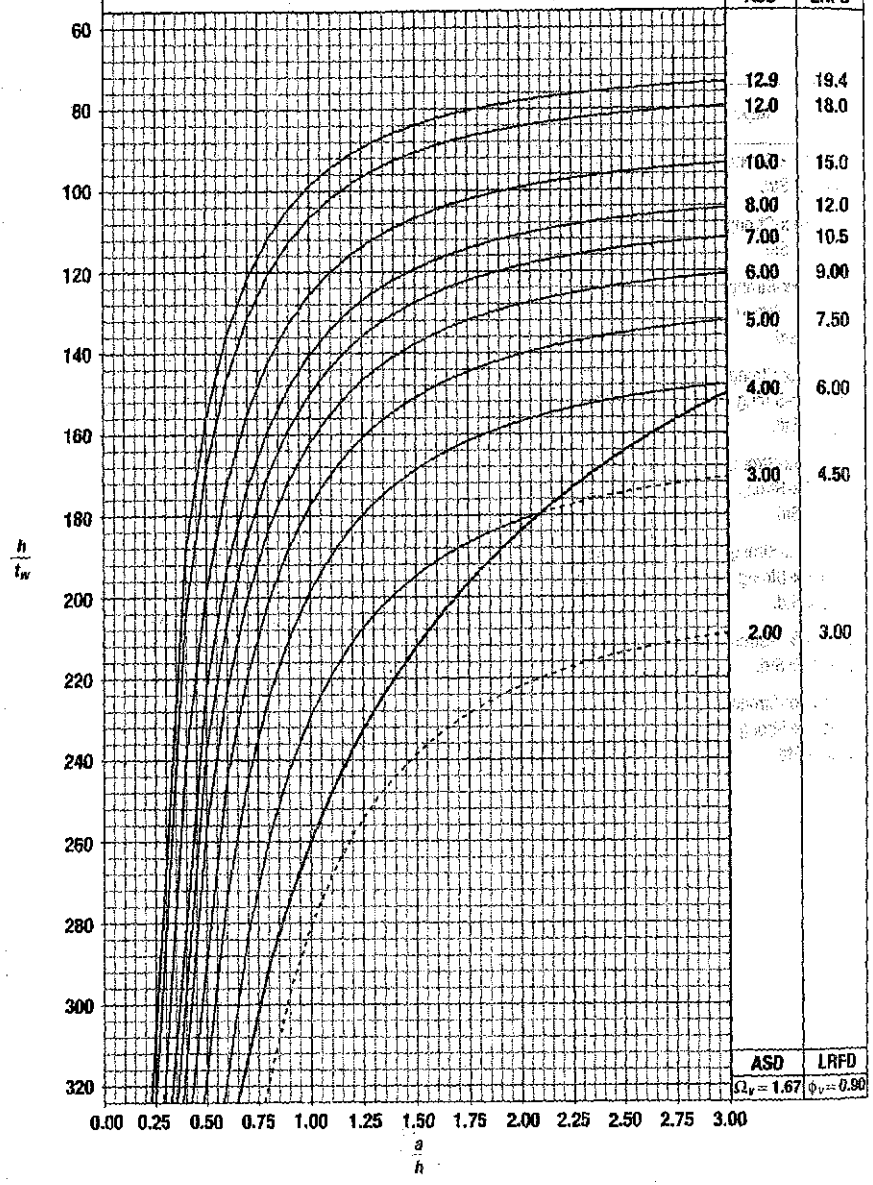

$\frac{V_n}{\Omega_v A_w}$ ASD	$\frac{\phi_v V_n}{A_w}$ LRFD
12.9	19.4
12.0	18.0
10.0	15.0
8.00	12.0
7.00	10.5
6.00	9.00
5.00	7.50
4.00	6.00
3.00	4.50
2.00	3.00
ASD	LRFD
Ω_v = 1.67	ϕ_v = 0.90

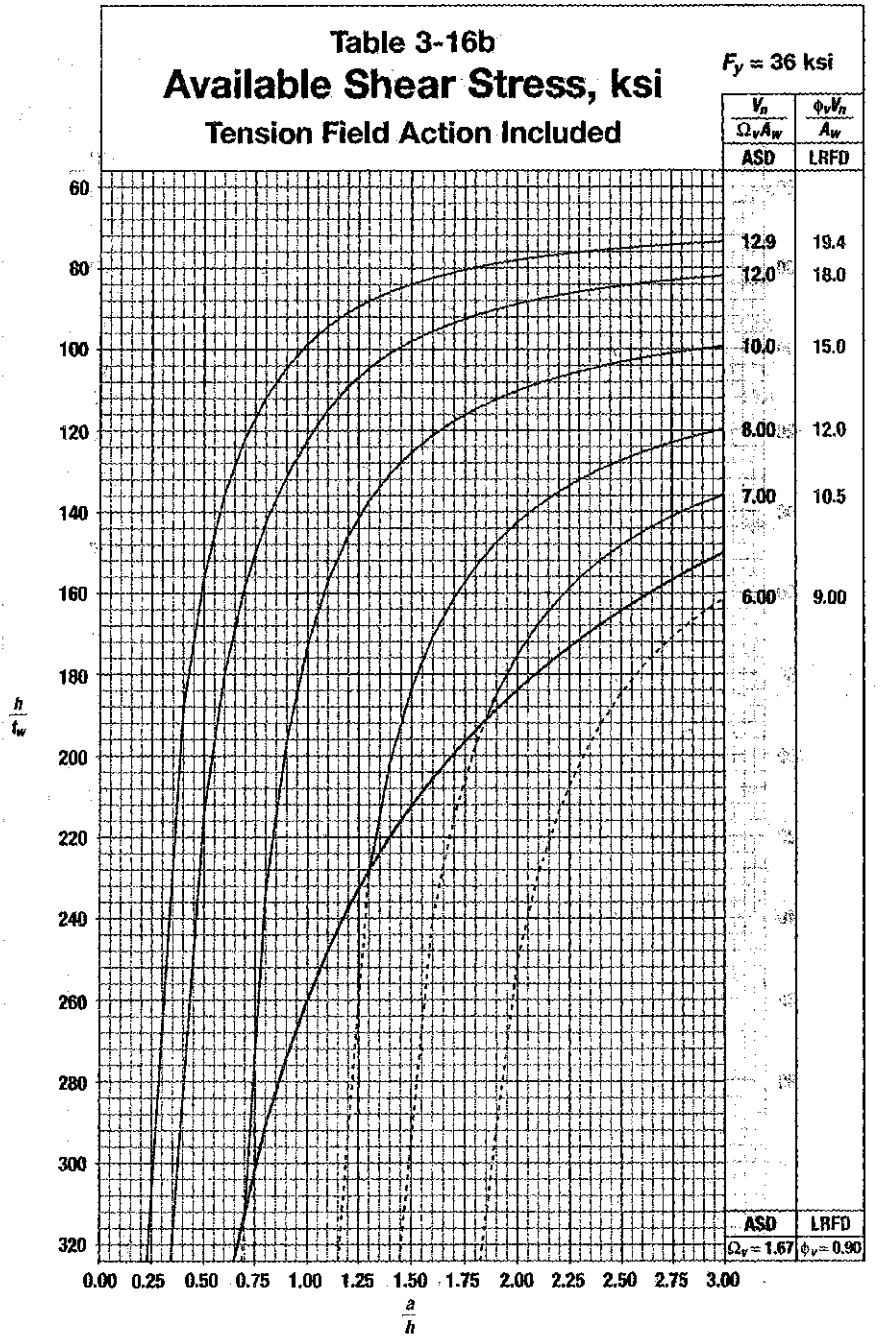
Table 3-16b
Available Shear Stress, ksi
Tension Field Action Included
F_y = 36 ksi
$\frac{V_n}{\Omega_v A_w}$ ASD
$\frac{\phi_v V_n}{A_w}$ LRFD
12.9 19.4
12.0 18.0
10.0 15.0
8.00 12.0
7.00 10.5
6.00 9.00
ASD Ω_v = 1.67
LRFD ϕ_v = 0.90
$\frac{h}{t_w}$
60 80 100 120 140 160 180 200 220 240 260 280 300 320
0.00 0.25 0.50 0.75 1.00 1.25 1.50 1.75 2.00 2.25 2.50 2.75 3.00
$\frac{a}{h}$

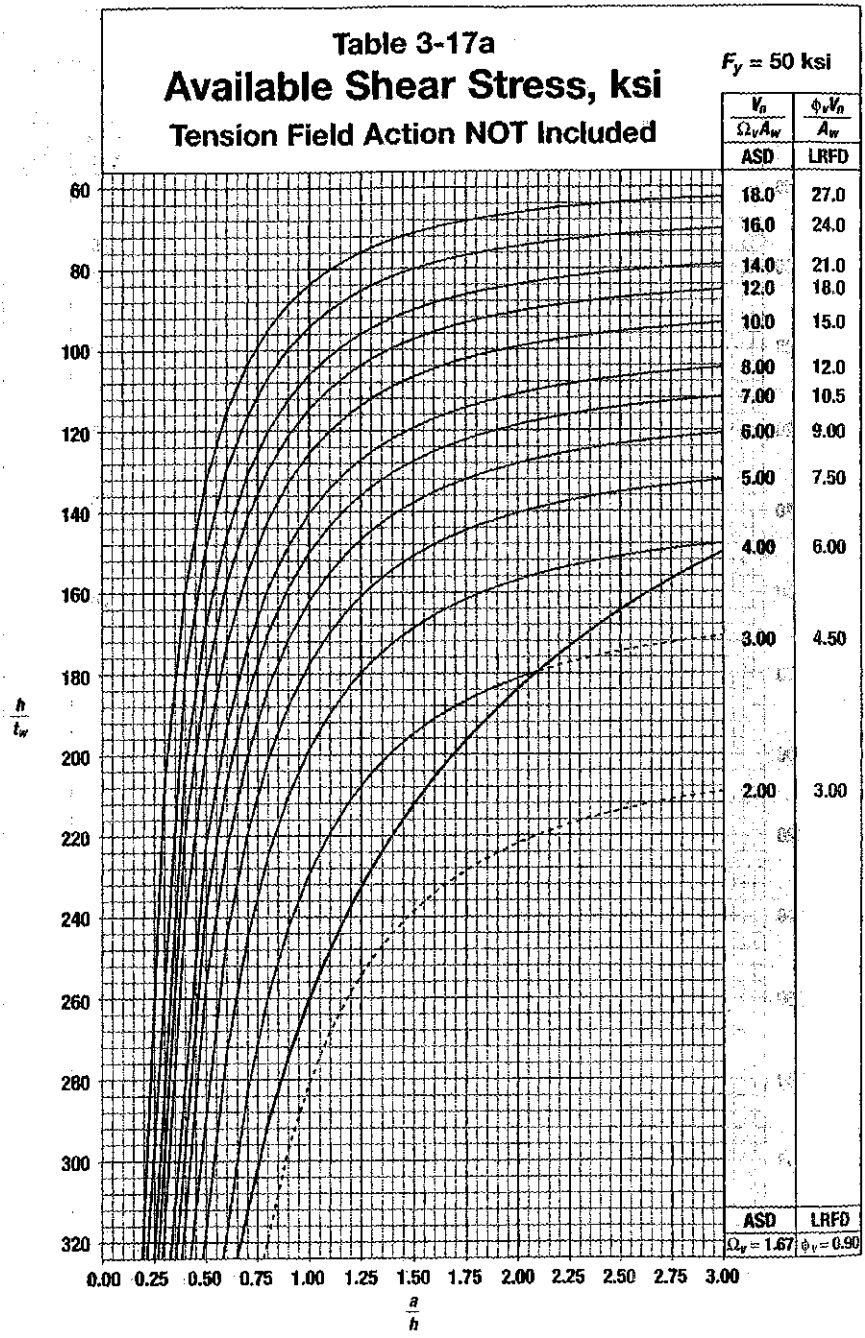
Table 3-17a
Available Shear Stress, ksi
Tension Field Action NOT Included
F_y = 50 ksi
$\frac{V_n}{\Omega_v A_w}$ ASD
$\frac{\phi_v V_n}{A_w}$ LRFD
18.0 27.0
16.0 24.0
14.0 21.0
12.0 18.0
10.0 15.0
8.00 12.0
7.00 10.5
6.00 9.00
5.00 7.50
4.00 6.00
3.00 4.50
2.00 3.00
ASD LRFD
Ω_v = 1.67 ϕ_v = 0.90
$\frac{h}{t_w}$
60 80 100 120 140 160 180 200 220 240 260 280 300 320
0.00 0.25 0.50 0.75 1.00 1.25 1.50 1.75 2.00 2.25 2.50 2.75 3.00
$\frac{a}{h}$

Table 3-17b
Available Shear Stress, ksi
Tension Field Action Included

F_y = 50 ksi

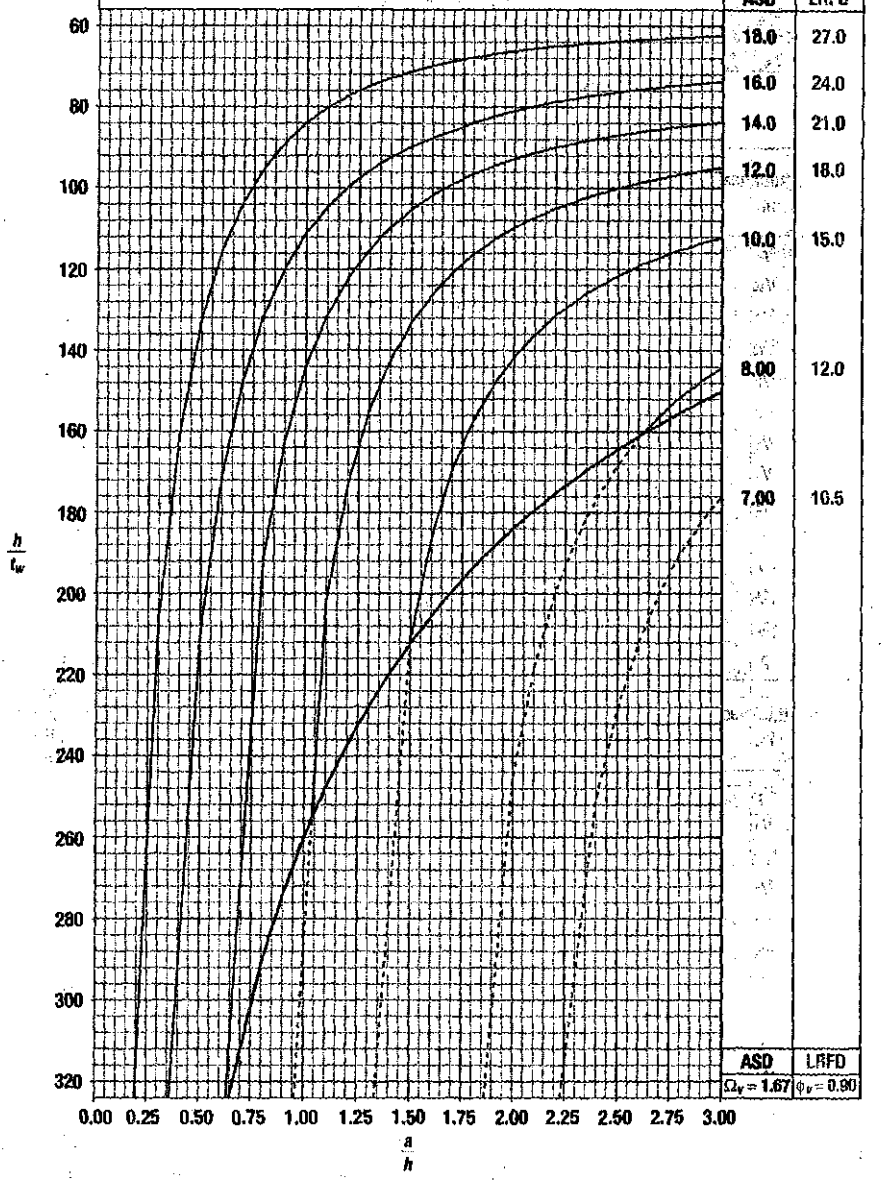

Table 3-18a
Raised Pattern Floor Plate Deflection-Controlled Applications
Recommended Maximum Uniformly Distributed Service Load, lb/ft²

Plate thickness *t*, in.	Theoretical weight, lb/ft²	Span, ft					Moment of inertia per ft of width, in.⁴/ft
		1.5	2	2.5	3	3.5	
1/8	6.15	89.5	37.8	19.3	11.2	7.05	0.00195
3/16	8.70	302	127	65.3	37.8	23.8	0.00659
1/4	11.3	716	302	155	89.5	56.4	0.0156
5/16	13.8	1400	590	302	175	110	0.0305
3/8	16.4	2420	1020	522	302	190	0.0527
1/2	21.5	5730	2420	1240	716	451	0.125
5/8	26.6	11200	4720	2420	1400	881	0.244
3/4	31.7	19300	8160	4180	2420	1520	0.422
7/8	36.8	30700	13000	6630	3840	2420	0.670
1	41.9	45800	19300	9900	5730	3610	1.00
1 1/4	52.1	89500	37800	19300	11200	7050	1.95
1 1/2	62.3	155000	65300	33400	19300	12200	3.38
1 3/4	72.5	246000	104000	53100	30700	19300	5.36
2	82.7	367000	155000	79200	45800	28900	8.00

Plate thickness *t*, in.	Theoretical weight, lb/ft²	Span, ft					Moment of inertia per ft of width, in.⁴/ft
		4	4.5	5	6	7	
3/16	8.70	15.9	11.2	8.16	4.72	2.97	0.00659
1/4	11.3	37.8	26.5	19.3	11.2	7.05	0.0156
5/16	13.8	73.8	51.8	37.8	21.9	13.8	0.0305
3/8	16.4	127	89.5	65.3	37.8	23.8	0.0527
1/2	21.5	302	212	155	89.5	56.4	0.125
5/8	26.6	590	414	302	175	110	0.244
3/4	31.7	1020	716	522	302	190	0.422
7/8	36.8	1620	1140	829	480	302	0.670
1	41.9	2420	1700	1240	716	451	1.00
1 1/4	52.1	4720	3320	2420	1400	881	1.95
1 1/2	62.3	8160	5730	4180	2420	1520	3.38
1 3/4	72.5	13000	9100	6630	3840	2420	5.36
2	82.7	19300	13600	9900	5730	3610	8.00

Note: Material conforms to ASTM A786.

Table 3-18b
Raised Pattern Floor Plate Flexural-Strength-Controlled Applications
Recommended Maximum Uniformly Distributed Load, lb/ft²

Plate thickness *t*, in.	Theoretical weight, lb/ft²	Span, ft										Plastic section modulus per ft of width, in.³/ft
		1.5		2		2.5		3		3.5		
Design		ASD	LRFD	ASD	LRFD	ASD	LRFD	ASD	LRFD	ASD	LRFD	
1/8	6.15	222	333	125	188	79.8	120	55.4	83.3	40.7	61.2	0.0469
3/16	8.70	499	750	281	422	180	270	125	188	91.7	138	0.105
1/4	11.3	887	1330	499	750	319	480	222	333	163	245	0.188
5/16	13.8	1390	2080	780	1170	499	750	347	521	255	383	0.293
3/8	16.4	2000	3000	1120	1690	719	1080	499	750	367	551	0.422
1/2	21.5	3550	5330	2000	3000	1280	1920	887	1330	652	980	0.750
5/8	26.6	5540	8330	3120	4690	2000	3000	1390	2080	1020	1530	1.17
3/4	31.7	7980	12000	4490	6750	2870	4320	2000	3000	1470	2200	1.69
7/8	36.8	10900	16300	6110	9190	3910	5880	2720	4080	2000	3000	2.30
1	41.9	14200	21300	7980	12000	5110	7680	3550	5330	2610	3920	3.00
1 1/4	52.1	22200	33300	12500	18800	7980	12000	5540	8330	4070	6120	4.69
1 1/2	62.3	31900	48000	18000	27000	11500	17300	7980	12000	5870	8820	6.75
1 3/4	72.5	43500	65300	24500	36800	15600	23500	10900	16300	7980	12000	9.19
2	82.7	56800	85300	31900	48000	20400	30700	14200	21300	10400	15700	12.0

Plate thickness *t*, in.	Theoretical weight, lb/ft²	Span, ft										Plastic section modulus per ft of width, in.³/ft
		4		4.5		5		6		7		
Design		ASD	LRFD	ASD	LRFD	ASD	LRFD	ASD	LRFD	ASD	LRFD	
3/16	8.70	70.2	105	55.4	83.3	44.9	67.5	31.2	46.9	22.9	34.4	0.105
1/4	11.3	125	188	98.6	148	79.8	120	55.4	83.3	40.7	61.2	0.188
5/16	13.8	195	293	154	231	125	188	86.6	130	63.6	95.7	0.293
3/8	16.4	281	422	222	333	180	270	125	188	91.7	138	0.422
1/2	21.5	499	750	394	593	319	480	222	333	163	245	0.750
5/8	26.6	780	1170	616	926	499	750	347	521	255	383	1.17
3/4	31.7	1120	1690	887	1330	719	1080	499	750	367	551	1.69
7/8	36.8	1530	2300	1210	1810	978	1470	679	1020	499	750	2.30
1	41.9	2000	3000	1580	2370	1280	1920	887	1330	652	980	3.00
1 1/4	52.1	3120	4690	2460	3700	2000	3000	1390	2080	1020	1530	4.69
1 1/2	62.3	4490	6750	3550	5330	2870	4320	2000	3000	1470	2200	6.75
1 3/4	72.5	6110	9190	4830	7260	3910	5880	2720	4080	2000	3000	9.19
2	82.7	7980	12000	6310	9480	5110	7680	3550	5330	2610	3920	12.0

Note: Material conforms to ASTM A786.

W40

Table 3-19
Composite W-Shapes
Available Strength in Flexure, kip-ft

F_y = 50 ksi

Shape	M_p/Ω_b kip-ft ASD	$\phi_b M_p$ kip-ft LRFD	PNA[c]	$Y1$[a] in.	ΣQ_n kip	$Y2$[b], in. 2 ASD	2 LRFD	2.5 ASD	2.5 LRFD	3 ASD	3 LRFD	3.5 ASD	3.5 LRFD
W40×297	3320	4990	TFL	0	4370	4770	7170	4880	7330	4990	7500	5100	7660
			2	0.413	3710	4700	7060	4790	7200	4880	7340	4980	7480
			3	0.825	3060	4610	6930	4690	7050	4770	7160	4840	7280
			4	1.24	2410	4510	6790	4570	6880	4630	6970	4700	7060
			BFL	1.65	1760	4400	6620	4450	6680	4490	6750	4530	6820
			6	4.58	1420	4320	6490	4360	6550	4390	6600	4430	6650
			7	8.17	1090	4180	6280	4210	6320	4240	6370	4260	6410
W40×294	3170	4760	TFL	0	4310	4770	7180	4880	7340	4990	7500	5100	7660
			2	0.483	3730	4710	7080	4800	7220	4900	7360	4990	7500
			3	0.965	3150	4630	6960	4710	7080	4790	7200	4870	7320
			4	1.45	2570	4540	6820	4600	6920	4670	7010	4730	7110
			BFL	1.93	1990	4430	6660	4480	6740	4530	6810	4580	6880
			6	5.71	1540	4300	6470	4340	6520	4380	6580	4420	6640
			7	10.0	1080	4080	6130	4110	6170	4130	6210	4160	6250
W40×278	2970	4460	TFL	0	4120	4540	6820	4640	6970	4740	7130	4850	7280
			2	0.453	3570	4480	6730	4570	6860	4660	7000	4750	7130
			3	0.905	3030	4410	6620	4480	6730	4560	6850	4630	6960
			4	1.36	2490	4320	6490	4380	6590	4440	6680	4510	6770
			BFL	1.81	1940	4220	6350	4270	6420	4320	6490	4370	6570
			6	5.67	1490	4100	6160	4130	6210	4170	6270	4210	6320
			7	10.1	1030	3870	5820	3900	5860	3920	5900	3950	5930
W40×277	3120	4690	TFL	0	4080	4440	6680	4540	6830	4650	6980	4750	7140
			2	0.395	3450	4370	6580	4460	6700	4550	6830	4630	6960
			3	0.790	2830	4290	6450	4360	6560	4440	6670	4510	6770
			4	1.19	2200	4200	6310	4260	6400	4310	6480	4370	6560
			BFL	1.58	1580	4100	6160	4130	6210	4170	6270	4210	6330
			6	4.20	1300	4030	6060	4060	6110	4090	6150	4130	6200
			7	7.58	1020	3920	5890	3940	5930	3970	5970	4000	6010
W40×264	2820	4240	TFL	0	3870	4250	6390	4350	6530	4440	6680	4540	6820
			2	0.433	3360	4190	6300	4280	6430	4360	6550	4440	6680
			3	0.865	2840	4120	6200	4190	6300	4270	6410	4340	6520
			4	1.30	2330	4040	6080	4100	6170	4160	6250	4220	6340
			BFL	1.73	1810	3950	5940	4000	6010	4040	6080	4090	6150
			6	5.53	1390	3840	5770	3870	5820	3910	5870	3940	5930
			7	9.92	968	3630	5460	3660	5500	3680	5540	3710	5570

ASD	LRFD
Ω_b = 1.67	ϕ_b = 0.90

[a] $Y1$ = distance from top of the steel beam to plastic neutral axis
[b] $Y2$ = distance from top of the steel beam to concrete flange force
[c] See Figure 3-3c for PNA locations.

Table 3-19 (continued)

Composite W-Shapes

Available Strength in Flexure, kip-ft

F_y = 50 ksi

W40

Shape	$Y2^b$, in.													
	4		4.5		5		5.5		6		6.5		7	
	ASD	LRFD	ASD	LRFD	ASD	LRFD	ASD	LRFD	ASD	LRFD	ASD	LRFD	ASD	LRFD
W40×297	5210	7820	5310	7990	5420	8150	5530	8320	5640	8480	5750	8640	5860	8810
	5070	7620	5160	7760	5250	7900	5350	8040	5440	8180	5530	8310	5620	8450
	4920	7390	5000	7510	5070	7620	5150	7740	5220	7850	5300	7970	5380	8080
	4760	7150	4820	7240	4880	7330	4940	7420	5000	7510	5060	7600	5120	7690
	4580	6880	4620	6950	4670	7010	4710	7080	4750	7140	4800	7210	4840	7280
	4460	6710	4500	6760	4530	6810	4570	6870	4600	6920	4640	6970	4670	7030
	4290	6450	4320	6490	4340	6530	4370	6570	4400	6610	4430	6650	4450	6690
W40×294	5200	7820	5310	7980	5420	8150	5530	8310	5630	8470	5740	8630	5850	8790
	5080	7640	5180	7780	5270	7920	5360	8060	5450	8200	5550	8340	5640	8480
	4950	7430	5020	7550	5100	7670	5180	7790	5260	7910	5340	8020	5420	8140
	4800	7210	4860	7300	4920	7400	4990	7500	5050	7590	5120	7690	5180	7790
	4630	6960	4680	7030	4730	7110	4780	7180	4830	7260	4880	7330	4930	7410
	4460	6700	4490	6760	4530	6810	4570	6870	4610	6930	4650	6990	4690	7040
	4190	6290	4210	6330	4240	6370	4270	6410	4290	6450	4320	6500	4350	6540
W40×278	4950	7440	5050	7590	5150	7750	5260	7900	5360	8060	5460	8210	5560	8360
	4830	7270	4920	7400	5010	7530	5100	7670	5190	7800	5280	7940	5370	8070
	4710	7080	4780	7190	4860	7300	4930	7420	5010	7530	5090	7640	5160	7760
	4570	6870	4630	6960	4690	7050	4750	7150	4820	7240	4880	7330	4940	7430
	4420	6640	4470	6710	4510	6780	4560	6860	4610	6930	4660	7000	4710	7080
	4250	6380	4280	6440	4320	6490	4360	6550	4390	6600	4430	6660	4470	6720
	3970	5970	4000	6010	4030	6050	4050	6090	4080	6130	4100	6170	4130	6200
W40×277	4850	7290	4950	7440	5050	7590	5150	7750	5260	7900	5360	8050	5460	8210
	4720	7090	4810	7220	4890	7350	4980	7480	5060	7610	5150	7740	5240	7870
	4580	6880	4650	6980	4720	7090	4790	7200	4860	7300	4930	7410	5000	7510
	4420	6640	4480	6730	4530	6810	4590	6890	4640	6970	4700	7060	4750	7140
	4250	6390	4290	6450	4330	6510	4370	6570	4410	6630	4450	6690	4490	6750
	4160	6250	4190	6300	4220	6350	4260	6400	4290	6450	4320	6500	4350	6540
	4020	6040	4050	6080	4070	6120	4100	6160	4120	6200	4150	6230	4170	6270
W40×264	4630	6970	4730	7110	4830	7260	4920	7400	5020	7550	5120	7690	5210	7840
	4530	6800	4610	6930	4690	7060	4780	7180	4860	7310	4950	7430	5030	7560
	4410	6620	4480	6730	4550	6840	4620	6940	4690	7050	4760	7160	4830	7260
	4280	6430	4330	6520	4390	6600	4450	6690	4510	6780	4570	6860	4630	6950
	4130	6210	4180	6280	4230	6350	4270	6420	4320	6490	4360	6550	4410	6620
	3980	5980	4010	6030	4050	6080	4080	6140	4120	6190	4150	6240	4190	6290
	3730	5610	3760	5640	3780	5680	3800	5720	3830	5750	3850	5790	3880	5830

ASD	LRFD
$\Omega_b = 1.67$	$\phi_b = 0.90$

[a] $Y1$ = distance from top of the steel beam to plastic neutral axis
[b] $Y2$ = distance from top of the steel beam to concrete flange force
[c] See Figure 3-3c for PNA locations.

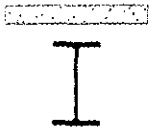

W40

Table 3-19 (continued)
Composite W-Shapes
Available Strength in Flexure, kip-ft

F_y = 50 ksi

Shape	M_p/Ω_b kip-ft	$\phi_b M_p$ kip-ft	PNA[c]	$Y1$[a]	ΣQ_n	$Y2$[b], in.							
						2		2.5		3		3.5	
	ASD	LRFD		in.	kip	ASD	LRFD	ASD	LRFD	ASD	LRFD	ASD	LRFD
W40×249	2790	4200	TFL	0	3680	3980	5980	4070	6120	4160	6260	4250	6390
			2	0.355	3110	3920	5890	4000	6010	4070	6120	4150	6240
			3	0.710	2550	3850	5780	3910	5880	3970	5970	4040	6070
			4	1.07	1990	3770	5660	3820	5740	3870	5810	3920	5890
			BFL	1.42	1430	3680	5520	3710	5580	3750	5630	3780	5690
			6	4.03	1180	3620	5440	3650	5480	3680	5530	3710	5570
			7	7.45	919	3520	5290	3540	5320	3560	5360	3590	5390
W40×235	2520	3790	TFL	0	3460	3770	5660	3850	5790	3940	5920	4030	6050
			2	0.395	2980	3720	5580	3790	5700	3860	5810	3940	5920
			3	0.790	2510	3650	5490	3720	5590	3780	5680	3840	5780
			4	1.19	2040	3580	5390	3640	5460	3690	5540	3740	5620
			BFL	1.58	1570	3510	5270	3540	5330	3580	5390	3620	5450
			6	5.16	1220	3410	5130	3440	5180	3470	5220	3500	5270
			7	9.44	864	3250	4880	3270	4920	3290	4950	3310	4980
W40×215	2410	3620	TFL	0	3180	3410	5120	3490	5240	3560	5360	3640	5480
			2	0.305	2690	3350	5040	3420	5140	3490	5240	3560	5340
			3	0.610	2210	3300	4950	3350	5040	3410	5120	3460	5200
			4	0.915	1730	3230	4850	3270	4920	3320	4980	3360	5050
			BFL	1.22	1250	3160	4740	3190	4790	3220	4840	3250	4880
			6	3.80	1020	3110	4670	3130	4710	3160	4750	3180	4780
			7	7.29	794	3020	4540	3040	4570	3060	4600	3080	4630
W40×211	2260	3400	TFL	0	3110	3360	5050	3440	5170	3520	5290	3590	5400
			2	0.355	2690	3320	4990	3380	5090	3450	5190	3520	5290
			3	0.710	2270	3260	4910	3320	4990	3380	5080	3430	5160
			4	1.07	1850	3200	4810	3250	4880	3300	4950	3340	5020
			BFL	1.42	1430	3140	4710	3170	4770	3210	4820	3240	4870
			6	5.00	1100	3050	4590	3080	4630	3110	4670	3140	4710
			7	9.35	776	2900	4370	2920	4390	2940	4420	2960	4450
W40×199	2170	3260	TFL	0	2940	3130	4710	3210	4820	3280	4930	3350	5040
			2	0.268	2520	3090	4640	3150	4730	3210	4830	3280	4920
			3	0.535	2090	3040	4560	3090	4640	3140	4720	3190	4800
			4	0.803	1670	2980	4480	3020	4540	3060	4600	3110	4670
			BFL	1.07	1250	2920	4390	2950	4430	2980	4480	3010	4530
			6	4.09	992	2860	4300	2890	4340	2910	4380	2940	4410
			7	8.04	735	2760	4150	2780	4170	2800	4200	2810	4230

ASD	LRFD
Ω_b = 1.67	ϕ_b = 0.90

[a] $Y1$ = distance from top of the steel beam to plastic neutral axis
[b] $Y2$ = distance from top of the steel beam to concrete flange force
[c] See Figure 3-3c for PNA locations.

Table 3-19 (continued)

Composite W-Shapes

Available Strength in Flexure, kip-ft

F_y = 50 ksi

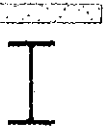

W40

Shape	$Y2^b$, in.													
	4		4.5		5		5.5		6		6.5		7	
	ASD	LRFD	ASD	LRFD	ASD	LRFD	ASD	LRFD	ASD	LRFD	ASD	LRFD	ASD	LRFD
W40×249	4350	6530	4440	6670	4530	6810	4620	6950	4710	7080	4800	7220	4900	7360
	4230	6360	4310	6470	4380	6590	4460	6710	4540	6820	4620	6940	4700	7060
	4100	6170	4170	6260	4230	6360	4290	6450	4360	6550	4420	6640	4480	6740
	3970	5960	4020	6030	4060	6110	4110	6180	4160	6260	4210	6330	4260	6410
	3820	5740	3850	5790	3890	5850	3930	5900	3960	5950	4000	6010	4030	6060
	3740	5610	3770	5660	3790	5700	3820	5750	3850	5790	3880	5840	3910	5880
	3610	5430	3630	5460	3660	5500	3680	5530	3700	5560	3730	5600	3750	5630
W40×235	4110	6180	4200	6310	4280	6440	4370	6570	4460	6700	4540	6830	4630	6960
	4010	6030	4090	6140	4160	6260	4240	6370	4310	6480	4390	6590	4460	6700
	3910	5870	3970	5960	4030	6060	4090	6150	4160	6250	4220	6340	4280	6440
	3790	5690	3840	5770	3890	5850	3940	5920	3990	6000	4040	6080	4090	6150
	3660	5500	3700	5560	3740	5620	3780	5680	3820	5740	3860	5800	3900	5860
	3540	5310	3570	5360	3600	5410	3630	5450	3660	5500	3690	5540	3720	5590
	3330	5010	3360	5040	3380	5080	3400	5110	3420	5140	3440	5170	3460	5210
W40×215	3720	5600	3800	5720	3880	5830	3960	5950	4040	6070	4120	6190	4200	6310
	3620	5450	3690	5550	3760	5650	3820	5750	3890	5850	3960	5950	4030	6050
	3520	5280	3570	5370	3630	5450	3680	5530	3740	5620	3790	5700	3850	5780
	3400	5110	3440	5180	3490	5240	3530	5310	3570	5370	3620	5440	3660	5500
	3280	4930	3310	4980	3340	5020	3370	5070	3400	5120	3440	5160	3470	5210
	3210	4820	3230	4860	3260	4900	3280	4940	3310	4970	3340	5010	3360	5050
	3100	4660	3120	4690	3140	4720	3160	4750	3180	4780	3200	4810	3220	4840
W40×211	3670	5520	3750	5640	3830	5750	3900	5870	3980	5980	4060	6100	4140	6220
	3580	5390	3650	5490	3720	5590	3790	5690	3850	5790	3920	5890	3990	5990
	3490	5250	3550	5330	3600	5420	3660	5500	3720	5590	3770	5670	3830	5760
	3390	5090	3430	5160	3480	5230	3530	5300	3570	5370	3620	5440	3660	5510
	3280	4930	3310	4980	3350	5030	3390	5090	3420	5140	3460	5200	3490	5250
	3160	4760	3190	4800	3220	4840	3250	4880	3270	4920	3300	4960	3330	5000
	2980	4480	3000	4510	3020	4540	3040	4570	3060	4600	3080	4630	3100	4660
W40×199	3430	5150	3500	5260	3570	5370	3650	5480	3720	5590	3790	5700	3870	5810
	3340	5020	3400	5110	3460	5210	3530	5300	3590	5400	3650	5490	3720	5580
	3250	4880	3300	4960	3350	5030	3400	5110	3450	5190	3510	5270	3560	5350
	3150	4730	3190	4790	3230	4860	3270	4920	3310	4980	3360	5040	3400	5110
	3040	4570	3070	4620	3110	4670	3140	4710	3170	4760	3200	4810	3230	4850
	2960	4450	2990	4490	3010	4530	3040	4560	3060	4600	3090	4640	3110	4670
	2830	4260	2850	4280	2870	4310	2890	4340	2910	4370	2920	4390	2940	4420

ASD	LRFD
Ω_b = 1.67	ϕ_b = 0.90

[a] $Y1$ = distance from top of the steel beam to plastic neutral axis
[b] $Y2$ = distance from top of the steel beam to concrete flange force
[c] See Figure 3-3c for PNA locations.

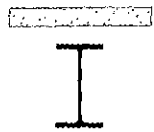

W40-W36

Table 3-19 (continued)
Composite W-Shapes
Available Strength in Flexure, kip-ft

F_y = 50 ksi

Shape	M_p/Ω_b kip-ft ASD	$\phi_b M_p$ kip-ft LRFD	PNA[c]	Y1[a] in.	ΣQ_n kip	Y2[b], in. 2 ASD	2 LRFD	2.5 ASD	2.5 LRFD	3 ASD	3 LRFD	3.5 ASD	3.5 LRFD
W40×183	1930	2900	TFL	0	2670	2860	4300	2930	4400	2990	4500	3060	4600
			2	0.300	2310	2820	4240	2880	4330	2940	4410	2990	4500
			3	0.600	1960	2780	4180	2830	4250	2880	4320	2920	4400
			4	0.900	1600	2730	4100	2770	4160	2810	4220	2850	4280
			BFL	1.20	1250	2680	4020	2710	4070	2740	4110	2770	4160
			6	4.77	958	2610	3920	2630	3950	2650	3990	2680	4030
			7	9.25	666	2480	3720	2490	3750	2510	3770	2530	3800
W40×167	1730	2600	TFL	0	2470	2620	3940	2680	4030	2740	4120	2800	4220
			2	0.258	2160	2590	3890	2640	3970	2700	4050	2750	4130
			3	0.515	1860	2550	3840	2600	3900	2640	3970	2690	4040
			4	0.773	1550	2510	3770	2550	3830	2590	3890	2630	3950
			BFL	1.03	1250	2470	3710	2490	3760	2530	3800	2560	3850
			6	4.95	933	2390	3600	2420	3630	2440	3670	2460	3700
			7	9.82	616	2240	3370	2260	3400	2280	3420	2290	3440
W40×149	1490	2240	TFL	0	2190	2310	3470	2360	3550	2420	3630	2470	3710
			2	0.208	1950	2280	3430	2330	3500	2380	3570	2430	3650
			3	0.415	1700	2250	3380	2290	3450	2340	3510	2380	3580
			4	0.623	1460	2220	3340	2260	3390	2290	3450	2330	3500
			BFL	0.830	1210	2190	3290	2220	3330	2250	3380	2280	3420
			6	5.15	879	2110	3170	2130	3200	2150	3240	2180	3270
			7	10.4	548	1950	2930	1960	2950	1980	2970	1990	2990
W36×302	3190	4800	TFL	0	4450	4590	6890	4700	7060	4810	7230	4920	7390
			2	0.420	3750	4510	6780	4600	6920	4700	7060	4790	7200
			3	0.840	3050	4420	6640	4490	6750	4570	6870	4640	6980
			4	1.26	2350	4310	6480	4370	6570	4430	6650	4490	6740
			BFL	1.68	1640	4190	6290	4230	6360	4270	6420	4310	6480
			6	4.06	1380	4120	6200	4160	6250	4190	6300	4230	6350
			7	6.88	1110	4030	6050	4050	6090	4080	6130	4110	6170
W36×282	2970	4460	TFL	0	4150	4250	6390	4350	6540	4460	6700	4560	6850
			2	0.393	3490	4190	6280	4270	6410	4350	6540	4440	6670
			3	0.785	2840	4090	6150	4170	6260	4240	6370	4310	6470
			4	1.18	2190	4000	6010	4050	6090	4110	6170	4160	6260
			BFL	1.57	1540	3890	5840	3930	5900	3970	5960	4000	6020
			6	4.00	1290	3830	5760	3860	5800	3890	5850	3930	5900
			7	6.84	1040	3740	5620	3760	5660	3790	5690	3810	5730

ASD	LRFD
Ω_b = 1.67	ϕ_b = 0.90

[a] Y1 = distance from top of the steel beam to plastic neutral axis
[b] Y2 = distance from top of the steel beam to concrete flange force
[c] See Figure 3-3c for PNA locations.

Table 3-19 (continued)

Composite W-Shapes

Available Strength in Flexure, kip-ft

F_y = 50 ksi

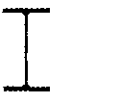

W40-W36

Shape	$Y2^b$, in.													
	4		4.5		5		5.5		6		6.5		7	
	ASD	LRFD	ASD	LRFD	ASD	LRFD	ASD	LRFD	ASD	LRFD	ASD	LRFD	ASD	LRFD
W40×183	3130	4700	3190	4800	3260	4900	3320	5000	3390	5100	3460	5200	3520	5300
	3050	4590	3110	4670	3170	4760	3220	4850	3280	4930	3340	5020	3400	5110
	2970	4470	3020	4540	3070	4620	3120	4690	3170	4760	3220	4840	3270	4910
	2890	4340	2930	4400	2970	4460	3010	4520	3050	4580	3090	4640	3130	4700
	2800	4210	2830	4260	2860	4300	2890	4350	2920	4400	2960	4440	2990	4490
	2700	4060	2730	4100	2750	4130	2770	4170	2800	4200	2820	4240	2850	4280
	2540	3820	2560	3850	2580	3870	2590	3900	2610	3920	2630	3950	2640	3970
W40×167	2870	4310	2930	4400	2990	4490	3050	4580	3110	4680	3170	4770	3240	4860
	2800	4210	2860	4290	2910	4380	2970	4460	3020	4540	3070	4620	3130	4700
	2740	4110	2780	4180	2830	4250	2880	4320	2920	4390	2970	4460	3020	4530
	2670	4010	2710	4070	2740	4120	2780	4180	2820	4240	2860	4300	2900	4360
	2590	3900	2620	3940	2650	3990	2690	4040	2720	4080	2750	4130	2780	4180
	2490	3740	2510	3770	2530	3810	2560	3840	2580	3880	2600	3910	2630	3950
	2310	3470	2320	3490	2340	3510	2350	3540	2370	3560	2380	3580	2400	3600
W40×149	2520	3790	2580	3880	2630	3960	2690	4040	2740	4120	2800	4200	2850	4290
	2470	3720	2520	3790	2570	3860	2620	3940	2670	4010	2720	4080	2770	4160
	2420	3640	2460	3700	2510	3770	2550	3830	2590	3890	2630	3960	2680	4020
	2370	3560	2400	3610	2440	3670	2480	3720	2510	3780	2550	3830	2580	3880
	2310	3470	2340	3520	2370	3560	2400	3610	2430	3650	2460	3700	2490	3740
	2200	3300	2220	3340	2240	3370	2260	3400	2290	3430	2310	3470	2330	3500
	2000	3010	2020	3030	2030	3050	2040	3070	2060	3090	2070	3110	2090	3130
W36×302	5030	7560	5140	7730	5250	7890	5360	8060	5470	8230	5580	8390	5700	8560
	4880	7340	4980	7480	5070	7620	5160	7760	5260	7900	5350	8040	5440	8180
	4720	7090	4800	7210	4870	7320	4950	7440	5020	7550	5100	7670	5180	7780
	4540	6830	4600	6920	4660	7010	4720	7090	4780	7180	4840	7270	4900	7360
	4350	6540	4390	6600	4430	6660	4470	6730	4520	6790	4560	6850	4600	6910
	4260	6410	4300	6460	4330	6510	4370	6560	4400	6610	4430	6670	4470	6720
	4140	6220	4160	6260	4190	6300	4220	6340	4250	6380	4270	6420	4300	6470
W36×282	4660	7010	4770	7170	4870	7320	4970	7480	5080	7630	5180	7790	5280	7940
	4530	6810	4610	6940	4700	7070	4790	7200	4880	7330	4960	7460	5050	7590
	4380	6580	4450	6690	4520	6790	4590	6900	4660	7010	4730	7110	4800	7220
	4220	6340	4270	6420	4330	6500	4380	6580	4440	6670	4490	6750	4540	6830
	4040	6080	4080	6130	4120	6190	4160	6250	4200	6310	4230	6360	4270	6420
	3960	5950	3990	6000	4020	6050	4050	6090	4090	6140	4120	6190	4150	6240
	3840	5770	3870	5810	3890	5850	3920	5890	3940	5930	3970	5970	4000	6010

ASD	LRFD
$\Omega_b = 1.67$	$\phi_b = 0.90$

[a] $Y1$ = distance from top of the steel beam to plastic neutral axis
[b] $Y2$ = distance from top of the steel beam to concrete flange force
[c] See Figure 3-3c for PNA locations.

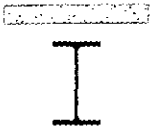

W36

Table 3-19 (continued)
Composite W-Shapes
Available Strength in Flexure, kip-ft

F_y = 50 ksi

Shape	M_p/Ω_b kip-ft ASD	$\phi_b M_p$ kip-ft LRFD	PNA[c]	$Y1$[a] in.	ΣQ_n kip	$Y2$[b], in. 2 ASD	2 LRFD	2.5 ASD	2.5 LRFD	3 ASD	3 LRFD	3.5 ASD	3.5 LRFD
W36×262	2740	4130	TFL	0	3860	3940	5920	4040	6070	4130	6210	4230	6350
			2	0.360	3260	3870	5820	3960	5940	4040	6070	4120	6190
			3	0.720	2660	3800	5710	3860	5810	3930	5910	4000	6010
			4	1.08	2070	3710	5580	3760	5660	3820	5730	3870	5810
			BFL	1.44	1470	3610	5430	3650	5490	3690	5540	3720	5600
			6	3.96	1220	3560	5350	3590	5390	3620	5440	3650	5480
			7	6.96	965	3460	5210	3490	5240	3510	5280	3540	5310
W36×256	2590	3900	TFL	0	3770	3890	5850	3980	5990	4080	6130	4170	6270
			2	0.433	3240	3830	5760	3910	5880	3990	6000	4070	6120
			3	0.865	2710	3760	5650	3830	5750	3900	5860	3960	5960
			4	1.30	2180	3680	5530	3730	5610	3790	5690	3840	5780
			BFL	1.73	1650	3590	5390	3630	5450	3670	5520	3710	5580
			6	5.18	1300	3490	5250	3520	5300	3560	5350	3590	5390
			7	8.90	941	3330	5010	3350	5040	3380	5080	3400	5110
W36×247	2570	3860	TFL	0	3630	3680	5530	3770	5670	3860	5800	3950	5940
			2	0.338	3070	3620	5440	3700	5560	3770	5670	3850	5790
			3	0.675	2510	3550	5340	3610	5430	3680	5530	3740	5620
			4	1.01	1950	3470	5220	3520	5290	3570	5360	3620	5440
			BFL	1.35	1400	3380	5090	3420	5140	3450	5190	3490	5240
			6	3.95	1150	3330	5000	3360	5050	3390	5090	3410	5130
			7	7.02	906	3240	4860	3260	4900	3280	4930	3300	4970
W36×232	2340	3510	TFL	0	3400	3490	5240	3570	5370	3660	5500	3740	5620
			2	0.393	2930	3430	5160	3510	5270	3580	5380	3650	5490
			3	0.785	2450	3370	5070	3430	5160	3500	5250	3560	5350
			4	1.18	1980	3300	4960	3350	5040	3400	5110	3450	5190
			BFL	1.57	1500	3220	4840	3260	4900	3300	4960	3330	5010
			6	5.04	1180	3140	4720	3170	4760	3200	4810	3230	4850
			7	8.78	850	2990	4500	3010	4530	3040	4560	3060	4590
W36×231	2400	3610	TFL	0	3410	3450	5180	3530	5310	3620	5430	3700	5560
			2	0.315	2890	3390	5090	3460	5200	3530	5310	3610	5420
			3	0.630	2370	3330	5000	3380	5090	3440	5180	3500	5270
			4	0.945	1850	3250	4890	3300	4960	3350	5030	3390	5100
			BFL	1.26	1330	3170	4770	3210	4820	3240	4870	3270	4920
			6	3.88	1090	3120	4690	3150	4730	3170	4770	3200	4810
			7	7.03	853	3030	4560	3050	4590	3070	4620	3090	4650

ASD	LRFD
Ω_b = 1.67	ϕ_b = 0.90

[a] $Y1$ = distance from top of the steel beam to plastic neutral axis
[b] $Y2$ = distance from top of the steel beam to concrete flange force
[c] See Figure 3-3c for PNA locations.

Table 3-19 (continued)

Composite W-Shapes

Available Strength in Flexure, kip-ft

F_y = 50 ksi

W36

Shape	$Y2^b$, in.													
	4		4.5		5		5.5		6		6.5		7	
	ASD	LRFD	ASD	LRFD	ASD	LRFD	ASD	LRFD	ASD	LRFD	ASD	LRFD	ASD	LRFD
W36×262	4320	6500	4420	6640	4520	6790	4610	6930	4710	7080	4810	7220	4900	7370
	4200	6310	4280	6430	4360	6560	4440	6680	4530	6800	4610	6920	4690	7050
	4060	6110	4130	6210	4200	6310	4260	6410	4330	6510	4400	6610	4460	6710
	3920	5890	3970	5970	4020	6040	4070	6120	4120	6200	4180	6280	4230	6350
	3760	5650	3800	5710	3830	5760	3870	5820	3910	5870	3940	5930	3980	5980
	3680	5530	3710	5570	3740	5620	3770	5670	3800	5710	3830	5760	3860	5800
	3560	5350	3580	5390	3610	5420	3630	5460	3660	5490	3680	5530	3700	5570
W36×256	4260	6410	4360	6550	4450	6690	4550	6830	4640	6970	4730	7120	4830	7260
	4150	6240	4230	6360	4320	6490	4400	6610	4480	6730	4560	6850	4640	6970
	4030	6060	4100	6160	4170	6260	4230	6360	4300	6470	4370	6570	4440	6670
	3900	5860	3950	5940	4010	6020	4060	6100	4120	6190	4170	6270	4220	6350
	3750	5640	3790	5700	3830	5760	3880	5830	3920	5890	3960	5950	4000	6010
	3620	5440	3650	5490	3690	5540	3720	5590	3750	5640	3780	5690	3820	5740
	3420	5150	3450	5180	3470	5220	3500	5250	3520	5290	3540	5320	3570	5360
W36×247	4040	6080	4130	6210	4220	6350	4310	6480	4400	6620	4500	6760	4590	6890
	3930	5900	4000	6020	4080	6130	4160	6250	4230	6360	4310	6480	4390	6590
	3800	5710	3860	5810	3930	5900	3990	6000	4050	6090	4110	6180	4180	6280
	3670	5510	3720	5580	3760	5660	3810	5730	3860	5800	3910	5880	3960	5950
	3520	5300	3560	5350	3590	5400	3630	5450	3660	5510	3700	5560	3730	5610
	3440	5170	3470	5220	3500	5260	3530	5300	3560	5350	3590	5390	3620	5430
	3330	5000	3350	5030	3370	5070	3390	5100	3420	5140	3440	5170	3460	5200
W36×232	3830	5750	3910	5880	4000	6010	4080	6130	4170	6260	4250	6390	4330	6520
	3730	5600	3800	5710	3870	5820	3950	5930	4020	6040	4090	6150	4160	6260
	3620	5440	3680	5530	3740	5620	3800	5710	3860	5800	3920	5900	3980	5990
	3500	5260	3550	5330	3600	5410	3650	5480	3700	5560	3750	5630	3800	5710
	3370	5070	3410	5120	3450	5180	3480	5240	3520	5290	3560	5350	3600	5410
	3260	4890	3290	4940	3310	4980	3340	5030	3370	5070	3400	5110	3430	5160
	3080	4630	3100	4660	3120	4690	3140	4720	3160	4750	3180	4790	3210	4820
W36×231	3790	5690	3870	5820	3960	5950	4040	6070	4130	6200	4210	6330	4300	6460
	3680	5530	3750	5640	3820	5750	3890	5850	3970	5960	4040	6070	4110	6180
	3560	5350	3620	5440	3680	5530	3740	5620	3800	5710	3860	5800	3920	5890
	3440	5170	3480	5240	3530	5310	3580	5380	3620	5440	3670	5510	3720	5580
	3310	4970	3340	5020	3370	5070	3410	5120	3440	5170	3470	5220	3500	5270
	3230	4850	3260	4890	3280	4930	3310	4980	3340	5020	3360	5060	3390	5100
	3120	4680	3140	4720	3160	4750	3180	4780	3200	4810	3220	4840	3240	4880

ASD	LRFD
Ω_b = 1.67	ϕ_b = 0.90

[a] Y1 = distance from top of the steel beam to plastic neutral axis
[b] Y2 = distance from top of the steel beam to concrete flange force
[c] See Figure 3-3c for PNA locations.

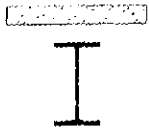

W36

Table 3-19 (continued)
Composite W-Shapes
Available Strength in Flexure, kip-ft

F_y = 50 ksi

Shape	M_p/Ω_b kip-ft ASD	$\phi_b M_p$ kip-ft LRFD	PNA[c]	$Y1$[a] in.	ΣQ_n kip	$Y2$[b], in. 2 ASD	2 LRFD	2.5 ASD	2.5 LRFD	3 ASD	3 LRFD	3.5 ASD	3.5 LRFD
W36×210	2080	3120	TFL	0	3100	3140	4720	3220	4840	3300	4960	3370	5070
			2	0.340	2680	3100	4660	3160	4760	3230	4860	3300	4960
			3	0.680	2270	3050	4580	3100	4660	3160	4750	3220	4830
			4	1.02	1850	2990	4490	3030	4560	3080	4630	3130	4700
			BFL	1.36	1440	2920	4390	2960	4440	2990	4500	3030	4550
			6	5.04	1100	2840	4260	2860	4300	2890	4350	2920	4390
			7	9.03	774	2690	4040	2710	4070	2730	4100	2750	4130
W36×194	1910	2880	TFL	0	2850	2880	4330	2950	4440	3020	4540	3090	4650
			2	0.315	2470	2840	4270	2900	4360	2960	4450	3020	4540
			3	0.630	2090	2790	4200	2840	4270	2900	4350	2950	4430
			4	0.945	1710	2740	4120	2780	4180	2820	4240	2870	4310
			BFL	1.26	1330	2680	4030	2710	4080	2750	4130	2780	4180
			6	4.93	1020	2600	3910	2630	3950	2650	3990	2680	4030
			7	8.94	713	2470	3710	2480	3730	2500	3760	2520	3790
W36×182	1790	2690	TFL	0	2680	2690	4050	2760	4150	2830	4250	2900	4350
			2	0.295	2320	2660	3990	2710	4080	2770	4170	2830	4250
			3	0.590	1970	2610	3930	2660	4000	2710	4070	2760	4150
			4	0.885	1610	2560	3850	2600	3910	2640	3970	2680	4040
			BFL	1.18	1250	2510	3770	2540	3820	2570	3870	2600	3910
			6	4.89	961	2440	3670	2460	3700	2490	3740	2510	3770
			7	8.91	670	2310	3470	2330	3500	2340	3520	2360	3550
W36×170	1670	2510	TFL	0	2500	2510	3770	2570	3860	2630	3960	2690	4050
			2	0.275	2170	2470	3720	2530	3800	2580	3880	2630	3960
			3	0.550	1840	2430	3660	2480	3730	2520	3790	2570	3860
			4	0.825	1510	2390	3590	2430	3650	2460	3700	2500	3760
			BFL	1.10	1180	2340	3520	2370	3560	2400	3600	2430	3650
			6	4.83	903	2270	3420	2300	3450	2320	3480	2340	3520
			7	8.91	625	2150	3230	2170	3250	2180	3280	2200	3300
W36×160	1560	2340	TFL	0	2350	2350	3530	2400	3610	2460	3700	2520	3790
			2	0.255	2040	2310	3480	2360	3550	2410	3630	2470	3710
			3	0.510	1740	2280	3420	2320	3490	2360	3550	2410	3620
			4	0.765	1430	2240	3360	2270	3410	2310	3470	2340	3520
			BFL	1.02	1130	2190	3290	2220	3340	2250	3380	2280	3420
			6	4.82	857	2130	3200	2150	3230	2170	3260	2190	3290
			7	8.96	588	2010	3020	2020	3040	2040	3060	2050	3080

ASD	LRFD
Ω_b = 1.67	ϕ_b = 0.90

[a] $Y1$ = distance from top of the steel beam to plastic neutral axis
[b] $Y2$ = distance from top of the steel beam to concrete flange force
[c] See Figure 3-3c for PNA locations.

Table 3-19 (continued)

Composite W-Shapes

Available Strength in Flexure, kip-ft

F_y = 50 ksi

W36

Shape	$Y2^b$, in.													
	4		4.5		5		5.5		6		6.5		7	
	ASD	LRFD	ASD	LRFD	ASD	LRFD	ASD	LRFD	ASD	LRFD	ASD	LRFD	ASD	LRFD
W36×210	3450	5190	3530	5300	3610	5420	3680	5540	3760	5650	3840	5770	3920	5880
	3370	5060	3430	5160	3500	5260	3570	5360	3630	5460	3700	5560	3770	5660
	3270	4920	3330	5000	3390	5090	3440	5170	3500	5260	3550	5340	3610	5430
	3170	4770	3220	4840	3260	4910	3310	4980	3360	5040	3400	5110	3450	5180
	3060	4610	3100	4660	3140	4710	3170	4770	3210	4820	3240	4880	3280	4930
	2950	4430	2970	4470	3000	4510	3030	4550	3060	4590	3080	4640	3110	4680
	2760	4160	2780	4180	2800	4210	2820	4240	2840	4270	2860	4300	2880	4330
W36×194	3160	4760	3240	4860	3310	4970	3380	5080	3450	5180	3520	5290	3590	5400
	3090	4640	3150	4730	3210	4820	3270	4910	3330	5010	3390	5100	3450	5190
	3000	4510	3050	4590	3100	4670	3160	4740	3210	4820	3260	4900	3310	4980
	2910	4370	2950	4440	2990	4500	3040	4560	3080	4630	3120	4690	3160	4760
	2810	4230	2840	4280	2880	4330	2910	4380	2940	4430	2980	4480	3010	4530
	2710	4070	2730	4100	2760	4140	2780	4180	2810	4220	2830	4260	2860	4300
	2540	3810	2560	3840	2570	3870	2590	3900	2610	3920	2630	3950	2640	3980
W36×182	2960	4450	3030	4550	3100	4650	3160	4750	3230	4850	3300	4950	3360	5060
	2890	4340	2950	4430	3000	4520	3060	4600	3120	4690	3180	4780	3240	4860
	2810	4220	2860	4300	2910	4370	2960	4440	3010	4520	3050	4590	3110	4660
	2720	4100	2760	4160	2810	4220	2850	4280	2890	4340	2930	4400	2970	4460
	2630	3960	2670	4010	2700	4050	2730	4100	2760	4150	2790	4190	2820	4240
	2530	3810	2560	3850	2580	3880	2610	3920	2630	3950	2650	3990	2680	4030
	2380	3570	2390	3600	2410	3620	2430	3650	2440	3670	2460	3700	2480	3720
W36×170	2760	4140	2820	4240	2880	4330	2940	4430	3010	4520	3070	4610	3130	4710
	2690	4040	2740	4120	2800	4200	2850	4290	2910	4370	2960	4450	3010	4530
	2620	3930	2660	4000	2710	4070	2750	4140	2800	4210	2850	4280	2890	4350
	2540	3820	2580	3870	2610	3930	2650	3990	2690	4040	2730	4100	2770	4160
	2460	3690	2490	3740	2520	3780	2550	3830	2580	3870	2600	3910	2630	3960
	2360	3550	2390	3580	2410	3620	2430	3650	2450	3690	2480	3720	2500	3750
	2210	3320	2230	3350	2240	3370	2260	3400	2270	3420	2290	3440	2310	3470
W36×160	2580	3880	2640	3970	2700	4050	2760	4140	2810	4230	2870	4320	2930	4410
	2520	3780	2570	3860	2620	3940	2670	4010	2720	4090	2770	4170	2820	4240
	2450	3680	2490	3750	2540	3810	2580	3880	2620	3940	2670	4010	2710	4070
	2380	3580	2410	3630	2450	3680	2490	3740	2520	3790	2560	3840	2590	3900
	2300	3460	2330	3510	2360	3550	2390	3590	2420	3630	2450	3680	2470	3720
	2210	3330	2230	3360	2260	3390	2280	3420	2300	3450	2320	3490	2340	3520
	2070	3110	2080	3130	2100	3150	2110	3170	2130	3190	2140	3220	2150	3240

ASD	LRFD
$\Omega_b = 1.67$	$\phi_b = 0.90$

[a] $Y1$ = distance from top of the steel beam to plastic neutral axis
[b] $Y2$ = distance from top of the steel beam to concrete flange force
[c] See Figure 3-3c for PNA locations.

W36-W33

Table 3-19 (continued)
Composite W-Shapes
Available Strength in Flexure, kip-ft

F_y = 50 ksi

Shape	M_p/Ω_b kip-ft	$\phi_b M_p$ kip-ft	PNA[c]	Y1[a]	ΣQ_n	Y2[b], in.							
						2		2.5		3		3.5	
	ASD	LRFD		in.	kip	ASD	LRFD	ASD	LRFD	ASD	LRFD	ASD	LRFD
W36×150	1450	2180	TFL	0	2220	2210	3310	2260	3400	2320	3480	2370	3560
			2	0.235	1930	2180	3270	2220	3340	2270	3410	2320	3490
			3	0.470	1650	2140	3220	2180	3280	2220	3340	2270	3410
			4	0.705	1370	2110	3160	2140	3220	2170	3270	2210	3320
			BFL	0.940	1090	2070	3110	2090	3150	2120	3190	2150	3230
			6	4.82	820	2000	3010	2020	3040	2040	3070	2060	3100
			7	9.09	554	1880	2830	1900	2850	1910	2870	1930	2890
W36×135	1270	1910	TFL	0	2000	1970	2960	2020	3040	2070	3110	2120	3190
			2	0.198	1760	1950	2930	1990	2990	2030	3060	2080	3120
			3	0.395	1520	1920	2880	1960	2940	2000	3000	2030	3060
			4	0.593	1280	1890	2840	1920	2890	1950	2940	1990	2980
			BFL	0.790	1050	1860	2790	1880	2830	1910	2870	1940	2910
			6	4.92	773	1790	2700	1810	2720	1830	2750	1850	2780
			7	9.49	499	1670	2510	1680	2530	1690	2540	1710	2560
W33×221	2140	3210	TFL	0	3270	3090	4640	3170	4760	3250	4890	3330	5010
			2	0.320	2760	3030	4560	3100	4660	3170	4770	3240	4870
			3	0.640	2250	2970	4460	3030	4550	3080	4630	3140	4720
			4	0.960	1750	2900	4360	2940	4420	2990	4490	3030	4560
			BFL	1.28	1240	2820	4240	2850	4290	2880	4330	2910	4380
			6	3.67	1030	2770	4170	2800	4210	2830	4250	2850	4290
			7	6.42	816	2700	4060	2720	4090	2740	4120	2760	4150
W33×201	1930	2900	TFL	0	2960	2780	4180	2850	4290	2930	4400	3000	4510
			2	0.288	2500	2730	4110	2790	4200	2860	4290	2920	4390
			3	0.575	2050	2680	4020	2730	4100	2780	4180	2830	4250
			4	0.863	1600	2620	3930	2660	3990	2700	4050	2740	4110
			BFL	1.15	1150	2550	3830	2580	3870	2600	3920	2630	3960
			6	3.65	944	2500	3760	2530	3800	2550	3830	2570	3870
			7	6.52	739	2430	3650	2450	3680	2470	3710	2490	3740
W33×169	1570	2360	TFL	0	2480	2330	3510	2400	3600	2460	3690	2520	3790
			2	0.305	2120	2300	3450	2350	3530	2400	3610	2460	3690
			3	0.610	1770	2250	3390	2300	3450	2340	3520	2390	3590
			4	0.915	1420	2210	3310	2240	3370	2280	3420	2310	3470
			BFL	1.22	1070	2150	3230	2180	3270	2200	3310	2230	3350
			6	4.28	845	2100	3150	2120	3190	2140	3220	2160	3250
			7	7.66	619	2010	3020	2020	3040	2040	3070	2060	3090

ASD	LRFD
$\Omega_b = 1.67$	$\phi_b = 0.90$

[a] Y1 = distance from top of the steel beam to plastic neutral axis
[b] Y2 = distance from top of the steel beam to concrete flange force
[c] See Figure 3-3c for PNA locations.

Table 3-19 (continued)

Composite W-Shapes

Available Strength in Flexure, kip-ft

F_y = 50 ksi

W36-W33

Shape	Y2[b], in.													
	4		4.5		5		5.5		6		6.5		7	
	ASD	LRFD	ASD	LRFD	ASD	LRFD	ASD	LRFD	ASD	LRFD	ASD	LRFD	ASD	LRFD
W36×150	2430	3650	2480	3730	2540	3810	2590	3900	2650	3980	2700	4060	2760	4140
	2370	3560	2420	3630	2460	3700	2510	3780	2560	3850	2610	3920	2660	3990
	2310	3470	2350	3530	2390	3590	2430	3650	2470	3710	2510	3780	2550	3840
	2240	3370	2280	3420	2310	3470	2340	3520	2380	3580	2410	3630	2450	3680
	2170	3270	2200	3310	2230	3350	2260	3390	2280	3430	2310	3470	2340	3510
	2080	3130	2100	3160	2130	3200	2150	3230	2170	3260	2190	3290	2210	3320
	1940	2910	1950	2940	1970	2960	1980	2980	1990	3000	2010	3020	2020	3040
W36×135	2170	3260	2220	3340	2270	3410	2320	3490	2370	3560	2420	3640	2470	3710
	2120	3190	2170	3250	2210	3320	2250	3390	2300	3450	2340	3520	2380	3580
	2070	3110	2110	3170	2150	3230	2180	3280	2220	3340	2260	3400	2300	3450
	2020	3030	2050	3080	2080	3130	2110	3180	2150	3220	2180	3270	2210	3320
	1960	2950	1990	2990	2010	3030	2040	3070	2070	3110	2090	3150	2120	3190
	1870	2810	1890	2840	1910	2870	1930	2900	1950	2930	1970	2960	1990	2990
	1720	2580	1730	2600	1740	2620	1750	2640	1770	2660	1780	2670	1790	2690
W33×221	3410	5130	3490	5250	3580	5380	3660	5500	3740	5620	3820	5740	3900	5860
	3310	4970	3380	5080	3450	5180	3510	5280	3580	5390	3650	5490	3720	5590
	3200	4800	3250	4890	3310	4970	3360	5060	3420	5140	3480	5220	3530	5310
	3070	4620	3120	4690	3160	4750	3210	4820	3250	4880	3290	4950	3340	5010
	2940	4430	2980	4470	3010	4520	3040	4570	3070	4610	3100	4660	3130	4710
	2880	4320	2900	4360	2930	4400	2950	4440	2980	4480	3010	4520	3030	4560
	2780	4180	2800	4210	2820	4240	2840	4270	2860	4300	2880	4330	2900	4360
W33×201	3070	4620	3150	4730	3220	4840	3300	4950	3370	5060	3440	5170	3520	5290
	2980	4480	3040	4570	3110	4670	3170	4760	3230	4860	3290	4950	3360	5040
	2880	4330	2930	4410	2980	4480	3030	4560	3090	4640	3140	4720	3190	4790
	2770	4170	2810	4230	2850	4290	2890	4350	2930	4410	2970	4470	3010	4530
	2660	4000	2690	4040	2720	4090	2750	4130	2780	4170	2810	4220	2830	4260
	2600	3900	2620	3940	2640	3980	2670	4010	2690	4050	2720	4080	2740	4120
	2500	3760	2520	3790	2540	3820	2560	3850	2580	3880	2600	3900	2620	3930
W33×169	2580	3880	2640	3970	2700	4070	2770	4160	2830	4250	2890	4340	2950	4440
	2510	3770	2560	3850	2610	3930	2670	4010	2720	4090	2770	4170	2830	4250
	2430	3650	2470	3720	2520	3790	2560	3850	2610	3920	2650	3990	2700	4050
	2350	3530	2380	3580	2420	3630	2450	3690	2490	3740	2520	3790	2560	3850
	2260	3390	2290	3430	2310	3470	2340	3510	2370	3550	2390	3600	2420	3640
	2180	3280	2200	3310	2230	3350	2250	3380	2270	3410	2290	3440	2310	3470
	2070	3110	2090	3140	2100	3160	2120	3180	2130	3210	2150	3230	2160	3250

ASD	LRFD
Ω_b = 1.67	ϕ_b = 0.90

[a] Y1 = distance from top of the steel beam to plastic neutral axis
[b] Y2 = distance from top of the steel beam to concrete flange force
[c] See Figure 3-3c for PNA locations.

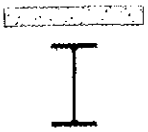

W33-W30

Table 3-19 (continued)
Composite W-Shapes
Available Strength in Flexure, kip-ft

$F_y = 50$ ksi

Shape	M_p/Ω_b kip-ft	$\phi_b M_p$ kip-ft	PNA[c]	Y1[a]	ΣQ_n	Y2[b], in.							
						2		2.5		3		3.5	
	ASD	LRFD		in.	kip	ASD	LRFD	ASD	LRFD	ASD	LRFD	ASD	LRFD
W33×152	1390	2100	TFL	0	2250	2100	3160	2160	3240	2210	3330	2270	3410
			2	0.265	1940	2070	3110	2120	3180	2160	3250	2210	3330
			3	0.530	1630	2030	3050	2070	3110	2110	3170	2150	3240
			4	0.795	1320	1990	2990	2020	3040	2060	3090	2090	3140
			BFL	1.06	1020	1950	2920	1970	2960	2000	3000	2020	3040
			6	4.34	788	1890	2850	1910	2870	1930	2900	1950	2930
			7	7.91	561	1800	2710	1820	2730	1830	2750	1840	2770
W33×141	1280	1930	TFL	0	2080	1930	2900	1980	2980	2030	3060	2090	3140
			2	0.240	1800	1900	2860	1950	2930	1990	2990	2040	3060
			3	0.480	1520	1870	2810	1910	2870	1950	2920	1980	2980
			4	0.720	1250	1830	2760	1860	2800	1900	2850	1930	2900
			BFL	0.960	971	1790	2700	1820	2730	1840	2770	1870	2810
			6	4.34	745	1740	2620	1760	2650	1780	2680	1800	2700
			7	8.08	519	1650	2480	1660	2500	1680	2520	1690	2540
W33×130	1170	1750	TFL	0	1920	1770	2660	1820	2740	1870	2810	1920	2880
			2	0.214	1670	1750	2630	1790	2690	1830	2750	1870	2810
			3	0.428	1420	1720	2580	1750	2640	1790	2690	1820	2740
			4	0.641	1180	1690	2540	1720	2580	1750	2620	1780	2670
			BFL	0.855	932	1650	2490	1680	2520	1700	2560	1720	2590
			6	4.39	705	1600	2410	1620	2440	1640	2460	1660	2490
			7	8.30	479	1510	2270	1520	2290	1530	2300	1540	2320
W33×118	1040	1560	TFL	0	1740	1600	2400	1640	2470	1680	2530	1730	2600
			2	0.185	1520	1580	2370	1610	2420	1650	2480	1690	2540
			3	0.370	1310	1550	2330	1580	2380	1620	2430	1650	2480
			4	0.555	1100	1520	2290	1550	2330	1580	2370	1610	2420
			BFL	0.740	884	1500	2250	1520	2280	1540	2320	1560	2350
			6	4.47	659	1450	2170	1460	2200	1480	2220	1500	2250
			7	8.56	434	1350	2030	1360	2050	1370	2060	1380	2080
W30×116	943	1420	TFL	0	1710	1450	2180	1490	2240	1540	2310	1580	2370
			2	0.213	1490	1430	2150	1460	2200	1500	2260	1540	2310
			3	0.425	1260	1400	2110	1430	2150	1460	2200	1500	2250
			4	0.638	1040	1370	2060	1400	2100	1430	2140	1450	2180
			BFL	0.850	818	1340	2020	1360	2050	1380	2080	1400	2110
			6	3.98	623	1300	1960	1320	1980	1330	2000	1350	2030
			7	7.43	428	1230	1840	1240	1860	1250	1870	1260	1890

ASD	LRFD
$\Omega_b = 1.67$	$\phi_b = 0.90$

[a] Y1 = distance from top of the steel beam to plastic neutral axis
[b] Y2 = distance from top of the steel beam to concrete flange force
[c] See Figure 3-3c for PNA locations.

Table 3-19 (continued)
Composite W-Shapes
Available Strength in Flexure, kip-ft

F_y = 50 ksi

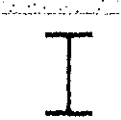

W33-W30

Shape	$Y2^b$, in.													
	4		4.5		5		5.5		6		6.5		7	
	ASD	LRFD	ASD	LRFD	ASD	LRFD	ASD	LRFD	ASD	LRFD	ASD	LRFD	ASD	LRFD
W33×152	2320	3490	2380	3580	2440	3660	2490	3750	2550	3830	2600	3910	2660	4000
	2260	3400	2310	3470	2360	3540	2410	3620	2450	3690	2500	3760	2550	3830
	2190	3300	2230	3360	2280	3420	2320	3480	2360	3540	2400	3600	2440	3660
	2120	3190	2160	3240	2190	3290	2220	3340	2250	3390	2290	3440	2320	3490
	2050	3080	2070	3110	2100	3150	2120	3190	2150	3230	2170	3270	2200	3310
	1970	2960	1990	2990	2010	3020	2030	3050	2050	3080	2070	3110	2090	3140
	1860	2790	1870	2810	1890	2830	1900	2850	1910	2880	1930	2900	1940	2920
W33×141	2140	3210	2190	3290	2240	3370	2290	3450	2350	3520	2400	3600	2450	3680
	2080	3130	2130	3200	2170	3260	2220	3330	2260	3400	2310	3470	2350	3530
	2020	3040	2060	3100	2100	3150	2140	3210	2170	3270	2210	3320	2250	3380
	1960	2940	1990	2990	2020	3040	2050	3080	2080	3130	2110	3180	2140	3220
	1890	2840	1920	2880	1940	2920	1960	2950	1990	2990	2010	3020	2040	3060
	1820	2730	1840	2760	1850	2790	1870	2820	1890	2840	1910	2870	1930	2900
	1700	2560	1720	2580	1730	2600	1740	2620	1750	2640	1770	2660	1780	2680
W33×130	1960	2950	2010	3020	2060	3100	2110	3170	2150	3240	2200	3310	2250	3380
	1910	2880	1960	2940	2000	3000	2040	3060	2080	3130	2120	3190	2160	3250
	1860	2800	1900	2850	1930	2900	1970	2960	2000	3010	2040	3060	2070	3120
	1800	2710	1830	2760	1860	2800	1890	2850	1920	2890	1950	2930	1980	2980
	1750	2630	1770	2660	1790	2690	1820	2730	1840	2760	1860	2800	1890	2830
	1670	2510	1690	2540	1710	2570	1730	2590	1740	2620	1760	2650	1780	2670
	1560	2340	1570	2360	1580	2370	1590	2390	1600	2410	1620	2430	1630	2450
W33×118	1770	2660	1810	2730	1860	2790	1900	2860	1940	2920	1990	2990	2030	3050
	1730	2600	1760	2650	1800	2710	1840	2770	1880	2820	1920	2880	1950	2940
	1680	2530	1710	2580	1750	2630	1780	2670	1810	2720	1850	2770	1880	2820
	1630	2460	1660	2500	1690	2540	1720	2580	1740	2620	1770	2660	1800	2700
	1580	2380	1610	2420	1630	2450	1650	2480	1670	2510	1700	2550	1720	2580
	1510	2270	1530	2300	1550	2320	1560	2350	1580	2370	1590	2400	1610	2420
	1390	2100	1410	2110	1420	2130	1430	2140	1440	2160	1450	2180	1460	2190
W30×116	1620	2440	1660	2500	1710	2570	1750	2630	1790	2690	1830	2760	1880	2820
	1580	2370	1610	2420	1650	2480	1690	2540	1720	2590	1760	2650	1800	2700
	1530	2300	1560	2340	1590	2390	1620	2440	1650	2490	1680	2530	1720	2580
	1480	2220	1500	2260	1530	2300	1550	2340	1580	2380	1610	2410	1630	2450
	1420	2140	1440	2170	1470	2200	1490	2230	1510	2260	1530	2290	1550	2320
	1360	2050	1380	2070	1390	2100	1410	2120	1430	2140	1440	2170	1460	2190
	1270	1910	1280	1920	1290	1940	1300	1950	1310	1970	1320	1990	1330	2000

ASD	LRFD
Ω_b = 1.67	ϕ_b = 0.90

[a] $Y1$ = distance from top of the steel beam to plastic neutral axis
[b] $Y2$ = distance from top of the steel beam to concrete flange force
[c] See Figure 3-3c for PNA locations.

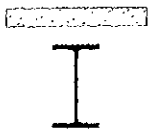

Table 3-19 (continued)
Composite W-Shapes
Available Strength in Flexure, kip-ft

F_y = 50 ksi

W30-W27

Shape	M_p/Ω_b kip-ft ASD	$\phi_b M_p$ kip-ft LRFD	PNA[c]	$Y1$[a] in.	ΣQ_n kip	$Y2$[b], in. = 2 ASD	2 LRFD	2.5 ASD	2.5 LRFD	3 ASD	3 LRFD	3.5 ASD	3.5 LRFD
W30×108	863	1300	TFL	0	1590	1340	2010	1380	2070	1420	2130	1460	2190
			2	0.190	1390	1320	1980	1350	2030	1380	2080	1420	2130
			3	0.380	1190	1290	1940	1320	1990	1350	2030	1380	2080
			4	0.570	987	1270	1910	1290	1940	1320	1980	1340	2020
			BFL	0.760	787	1240	1870	1260	1900	1280	1930	1300	1960
			6	4.04	592	1200	1800	1210	1830	1230	1850	1240	1870
			7	7.63	396	1120	1690	1130	1700	1140	1720	1150	1730
W30×99	778	1170	TFL	0	1450	1220	1830	1260	1890	1290	1940	1330	2000
			2	0.168	1270	1200	1800	1230	1850	1260	1900	1300	1950
			3	0.335	1100	1180	1780	1210	1820	1240	1860	1260	1900
			4	0.503	922	1160	1740	1180	1780	1210	1810	1230	1850
			BFL	0.670	747	1140	1710	1160	1740	1170	1770	1190	1790
			6	4.19	555	1100	1650	1110	1670	1120	1690	1140	1710
			7	7.88	363	1020	1530	1030	1540	1040	1560	1050	1570
W30×90	706	1060	TFL	0	1320	1100	1650	1130	1700	1160	1750	1200	1800
			2	0.153	1160	1080	1630	1110	1670	1140	1710	1170	1760
			3	0.305	998	1070	1600	1090	1640	1110	1680	1140	1710
			4	0.458	839	1050	1570	1070	1600	1090	1640	1110	1670
			BFL	0.610	681	1030	1540	1040	1570	1060	1590	1080	1620
			6	4.01	505	989	1490	1000	1510	1010	1530	1030	1540
			7	7.76	329	920	1380	928	1400	937	1410	945	1420
W27×102	761	1140	TFL	0	1500	1160	1750	1200	1810	1240	1860	1280	1920
			2	0.208	1290	1140	1720	1170	1770	1210	1810	1240	1860
			3	0.415	1090	1120	1680	1150	1720	1170	1760	1200	1800
			4	0.623	878	1090	1640	1110	1670	1140	1710	1160	1740
			BFL	0.830	670	1060	1600	1080	1620	1100	1650	1110	1670
			6	3.40	523	1030	1550	1050	1570	1060	1590	1070	1610
			7	6.27	375	984	1480	993	1490	1000	1510	1010	1520
W27×94	694	1040	TFL	0	1380	1060	1600	1100	1650	1130	1700	1170	1750
			2	0.186	1190	1040	1570	1070	1610	1100	1660	1130	1700
			3	0.373	1010	1020	1540	1050	1580	1070	1610	1100	1650
			4	0.559	821	1000	1500	1020	1530	1040	1570	1060	1600
			BFL	0.745	635	976	1470	992	1490	1010	1510	1020	1540
			6	3.45	490	947	1420	959	1440	971	1460	983	1480
			7	6.41	345	897	1350	905	1360	914	1370	922	1390

ASD	LRFD
Ω_b = 1.67	ϕ_b = 0.90

[a] $Y1$ = distance from top of the steel beam to plastic neutral axis
[b] $Y2$ = distance from top of the steel beam to concrete flange force
[c] See Figure 3-3c for PNA locations.

Table 3-19 (continued)

Composite W-Shapes

Available Strength in Flexure, kip-ft

F_y = 50 ksi

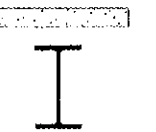

W30-W27

Shape	$Y2^b$, in.													
	4		4.5		5		5.5		6		6.5		7	
	ASD	LRFD	ASD	LRFD	ASD	LRFD	ASD	LRFD	ASD	LRFD	ASD	LRFD	ASD	LRFD
W30×108	1490	2250	1530	2310	1570	2370	1610	2430	1650	2480	1690	2540	1730	2600
	1450	2190	1490	2240	1520	2290	1560	2340	1590	2390	1630	2450	1660	2500
	1410	2120	1440	2170	1470	2210	1500	2260	1530	2300	1560	2340	1590	2390
	1370	2050	1390	2090	1420	2130	1440	2170	1470	2200	1490	2240	1510	2280
	1320	1980	1340	2010	1360	2040	1380	2070	1400	2100	1420	2130	1440	2160
	1260	1890	1270	1910	1290	1940	1300	1960	1320	1980	1330	2000	1350	2030
	1160	1750	1170	1760	1180	1780	1190	1790	1200	1810	1210	1820	1220	1840
W30×99	1360	2050	1400	2100	1440	2160	1470	2210	1510	2270	1540	2320	1580	2380
	1330	2000	1360	2040	1390	2090	1420	2140	1460	2190	1490	2230	1520	2280
	1290	1940	1320	1980	1350	2020	1370	2060	1400	2100	1430	2150	1460	2190
	1250	1880	1270	1920	1300	1950	1320	1990	1340	2020	1370	2050	1390	2090
	1210	1820	1230	1850	1250	1880	1270	1910	1290	1930	1300	1960	1320	1990
	1150	1730	1160	1750	1180	1770	1190	1790	1210	1810	1220	1830	1230	1850
	1050	1590	1060	1600	1070	1610	1080	1630	1090	1640	1100	1650	1110	1670
W30×90	1230	1850	1260	1900	1300	1950	1330	2000	1360	2050	1390	2100	1430	2150
	1200	1800	1230	1840	1260	1890	1280	1930	1310	1970	1340	2020	1370	2060
	1160	1750	1190	1790	1210	1830	1240	1860	1260	1900	1290	1940	1310	1970
	1130	1700	1150	1730	1170	1760	1190	1790	1210	1820	1230	1860	1260	1890
	1090	1640	1110	1670	1130	1700	1150	1720	1160	1750	1180	1770	1200	1800
	1040	1560	1050	1580	1070	1600	1080	1620	1090	1640	1100	1660	1120	1680
	953	1430	961	1440	969	1460	978	1470	986	1480	994	1490	1000	1510
W27×102	1310	1970	1350	2030	1390	2090	1430	2140	1460	2200	1500	2260	1540	2310
	1270	1910	1300	1960	1340	2010	1370	2060	1400	2100	1430	2150	1460	2200
	1230	1840	1250	1880	1280	1930	1310	1970	1340	2010	1360	2050	1390	2090
	1180	1770	1200	1810	1220	1840	1250	1870	1270	1900	1290	1940	1310	1970
	1130	1700	1150	1720	1160	1750	1180	1770	1200	1800	1210	1830	1230	1850
	1090	1630	1100	1650	1110	1670	1130	1690	1140	1710	1150	1730	1160	1750
	1020	1540	1030	1550	1040	1560	1050	1580	1060	1590	1070	1610	1080	1620
W27×94	1200	1810	1240	1860	1270	1910	1300	1960	1340	2010	1370	2060	1410	2120
	1160	1750	1190	1790	1220	1840	1250	1880	1280	1930	1310	1970	1340	2020
	1120	1690	1150	1730	1170	1760	1200	1800	1220	1840	1250	1880	1270	1920
	1080	1630	1110	1660	1120	1690	1140	1720	1160	1750	1180	1780	1210	1810
	1040	1560	1050	1590	1070	1610	1090	1630	1100	1660	1120	1680	1130	1700
	996	1500	1010	1510	1020	1530	1030	1550	1040	1570	1060	1590	1070	1610
	931	1400	940	1410	948	1430	957	1440	965	1450	974	1460	983	1480

ASD	LRFD
Ω_b = 1.67	ϕ_b = 0.90

[a] $Y1$ = distance from top of the steel beam to plastic neutral axis
[b] $Y2$ = distance from top of the steel beam to concrete flange force
[c] See Figure 3-3c for PNA locations.

W27-W24

Table 3-19 (continued)
Composite W-Shapes
Available Strength in Flexure, kip-ft

F_y = 50 ksi

Shape	M_p/Ω_b kip-ft ASD	$\phi_b M_p$ kip-ft LRFD	PNA[c]	$Y1$[a] in.	ΣQ_n kip	$Y2$[b], in. 2 ASD	2 LRFD	2.5 ASD	2.5 LRFD	3 ASD	3 LRFD	3.5 ASD	3.5 LRFD
W27×84	609	915	TFL	0	1240	946	1420	977	1470	1010	1510	1040	1560
			2	0.160	1080	929	1400	956	1440	983	1480	1010	1520
			3	0.320	915	911	1370	934	1400	957	1440	980	1470
			4	0.480	755	892	1340	911	1370	930	1400	949	1430
			BFL	0.640	595	872	1310	887	1330	902	1360	916	1380
			6	3.53	452	843	1270	855	1280	866	1300	877	1320
			7	6.64	309	793	1190	800	1200	808	1210	816	1230
W24×94	634	953	TFL	0	1390	978	1470	1010	1520	1050	1570	1080	1630
			2	0.219	1190	957	1440	987	1480	1020	1530	1050	1570
			3	0.438	988	934	1400	959	1440	983	1480	1010	1510
			4	0.656	790	909	1370	928	1400	948	1430	968	1450
			BFL	0.875	591	881	1320	896	1350	911	1370	926	1390
			6	3.05	469	858	1290	869	1310	881	1320	893	1340
			7	5.43	346	819	1230	828	1240	837	1260	845	1270
W24×84	559	840	TFL	0	1240	866	1300	897	1350	927	1390	958	1440
			2	0.193	1060	848	1270	874	1310	901	1350	927	1390
			3	0.385	888	828	1240	850	1280	872	1310	894	1340
			4	0.578	714	806	1210	824	1240	842	1270	860	1290
			BFL	0.770	540	783	1180	797	1200	810	1220	824	1240
			6	3.02	425	761	1140	772	1160	782	1180	793	1190
			7	5.48	309	725	1090	733	1100	740	1110	748	1120
W24×76	499	750	TFL	0	1120	780	1170	808	1210	836	1260	863	1300
			2	0.170	967	764	1150	788	1180	812	1220	836	1260
			3	0.340	814	747	1120	767	1150	787	1180	807	1210
			4	0.510	662	728	1090	745	1120	761	1140	778	1170
			BFL	0.680	509	708	1060	721	1080	734	1100	746	1120
			6	2.99	394	687	1030	697	1050	707	1060	716	1080
			7	5.59	280	651	979	658	989	665	1000	672	1010
W24×68	442	664	TFL	0	1010	695	1040	720	1080	745	1120	770	1160
			2	0.146	874	681	1020	703	1060	725	1090	746	1120
			3	0.293	743	666	1000	685	1030	704	1060	722	1090
			4	0.439	611	651	978	666	1000	681	1020	697	1050
			BFL	0.585	480	635	954	647	972	658	990	670	1010
			6	3.04	366	613	922	623	936	632	949	641	963
			7	5.80	251	577	867	583	876	589	886	595	895

ASD	LRFD
Ω_b = 1.67	ϕ_b = 0.90

[a] $Y1$ = distance from top of the steel beam to plastic neutral axis
[b] $Y2$ = distance from top of the steel beam to concrete flange force
[c] See Figure 3-3c for PNA locations.

Table 3-19 (continued)

Composite W-Shapes

Available Strength in Flexure, kip-ft

F_y = 50 ksi

W27-W24

Shape	$Y2^b$, in.													
	4		4.5		5		5.5		6		6.5		7	
	ASD	LRFD	ASD	LRFD	ASD	LRFD	ASD	LRFD	ASD	LRFD	ASD	LRFD	ASD	LRFD
W27×84	1070	1610	1100	1650	1130	1700	1160	1750	1190	1790	1220	1840	1250	1880
	1040	1560	1060	1600	1090	1640	1120	1680	1140	1720	1170	1760	1200	1800
	1000	1510	1030	1540	1050	1580	1070	1610	1090	1640	1120	1680	1140	1710
	968	1450	987	1480	1010	1510	1020	1540	1040	1570	1060	1600	1080	1620
	931	1400	946	1420	961	1440	976	1470	991	1490	1010	1510	1020	1530
	888	1340	900	1350	911	1370	922	1390	933	1400	945	1420	956	1440
	824	1240	831	1250	839	1260	847	1270	854	1280	862	1300	870	1310
W24×94	1120	1680	1150	1730	1190	1780	1220	1830	1250	1890	1290	1940	1320	1990
	1080	1620	1110	1660	1130	1710	1160	1750	1190	1790	1220	1840	1250	1880
	1030	1550	1060	1590	1080	1630	1110	1660	1130	1700	1160	1740	1180	1770
	988	1480	1010	1510	1030	1540	1050	1570	1070	1600	1090	1630	1110	1660
	940	1410	955	1440	970	1460	985	1480	999	1500	1010	1520	1030	1550
	904	1360	916	1380	928	1390	939	1410	951	1430	963	1450	975	1460
	854	1280	863	1300	871	1310	880	1320	888	1340	897	1350	906	1360
W24×84	989	1490	1020	1530	1050	1580	1080	1630	1110	1670	1140	1720	1170	1760
	954	1430	980	1470	1010	1510	1030	1550	1060	1590	1090	1630	1110	1670
	916	1380	939	1410	961	1440	983	1480	1010	1510	1030	1540	1050	1580
	878	1320	895	1350	913	1370	931	1400	949	1430	967	1450	985	1480
	837	1260	851	1280	864	1300	878	1320	891	1340	904	1360	918	1380
	804	1210	814	1220	825	1240	835	1260	846	1270	856	1290	867	1300
	756	1140	764	1150	771	1160	779	1170	787	1180	794	1190	802	1210
W24×76	891	1340	919	1380	947	1420	975	1470	1000	1510	1030	1550	1060	1590
	860	1290	884	1330	909	1370	933	1400	957	1440	981	1470	1010	1510
	828	1240	848	1270	868	1310	889	1340	909	1370	929	1400	950	1430
	794	1190	811	1220	827	1240	844	1270	860	1290	877	1320	893	1340
	759	1140	772	1160	784	1180	797	1200	810	1220	823	1240	835	1260
	726	1090	736	1110	746	1120	756	1140	766	1150	775	1170	785	1180
	679	1020	686	1030	693	1040	700	1050	707	1060	714	1070	721	1080
W24×68	795	1190	820	1230	845	1270	870	1310	895	1350	920	1380	945	1420
	768	1150	790	1190	812	1220	834	1250	855	1290	877	1320	899	1350
	741	1110	759	1140	778	1170	796	1200	815	1220	833	1250	852	1280
	712	1070	727	1090	742	1120	758	1140	773	1160	788	1180	804	1210
	682	1030	694	1040	706	1060	718	1080	730	1100	742	1120	754	1130
	650	977	659	990	668	1000	677	1020	686	1030	696	1050	705	1060
	602	904	608	914	614	923	620	933	627	942	633	951	639	961

ASD	LRFD
Ω_b = 1.67	ϕ_b = 0.90

[a] $Y1$ = distance from top of the steel beam to plastic neutral axis
[b] $Y2$ = distance from top of the steel beam to concrete flange force
[c] See Figure 3-3c for PNA locations.

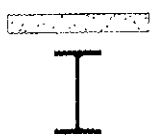

W24-W21

Table 3-19 (continued)
Composite W-Shapes
Available Strength in Flexure, kip-ft

F_y = 50 ksi

Shape	M_p/Ω_b kip-ft ASD	$\phi_b M_p$ kip-ft LRFD	PNA[c]	$Y1$[a] in.	ΣQ_n kip	$Y2$[b], in. 2 ASD	2 LRFD	2.5 ASD	2.5 LRFD	3 ASD	3 LRFD	3.5 ASD	3.5 LRFD
W24×62	382	574	TFL	0	910	629	945	652	979	674	1010	697	1050
			2	0.148	806	618	929	638	959	658	990	679	1020
			3	0.295	702	607	912	624	938	642	964	659	991
			4	0.443	598	594	893	609	916	624	938	639	961
			BFL	0.590	495	581	874	594	892	606	911	618	929
			6	3.45	361	555	834	564	848	573	862	582	875
			7	6.56	228	509	764	514	773	520	781	526	790
W24×55	334	503	TFL	0	810	558	838	578	869	598	899	618	929
			2	0.126	721	549	825	567	852	585	879	603	906
			3	0.253	633	539	810	555	834	571	858	586	881
			4	0.379	544	529	795	542	815	556	836	570	856
			BFL	0.505	456	518	779	529	796	541	813	552	830
			6	3.46	329	493	742	502	754	510	766	518	779
			7	6.67	203	449	675	454	682	459	690	464	697
W21×73	429	645	TFL	0	1080	676	1020	703	1060	730	1100	756	1140
			2	0.185	921	660	992	683	1030	706	1060	729	1100
			3	0.370	768	642	966	662	994	681	1020	700	1050
			4	0.555	614	624	937	639	960	654	983	670	1010
			BFL	0.740	461	603	907	615	924	626	941	638	959
			6	2.58	365	586	881	595	895	604	908	613	922
			7	4.69	269	559	840	566	851	573	861	579	871
W21×68	399	600	TFL	0	1000	626	941	651	979	676	1020	701	1050
			2	0.171	858	612	919	633	951	654	983	676	1020
			3	0.343	717	596	895	613	922	631	949	649	976
			4	0.514	575	578	869	593	891	607	912	621	934
			BFL	0.685	434	560	842	571	858	582	874	593	891
			6	2.60	342	544	817	552	830	561	843	569	856
			7	4.74	250	518	778	524	787	530	797	536	806
W21×62	359	540	TFL	0	915	571	858	594	892	616	926	639	961
			2	0.154	788	558	838	577	868	597	897	617	927
			3	0.308	662	544	817	560	842	577	867	593	891
			4	0.461	535	528	794	542	814	555	834	568	854
			BFL	0.615	408	512	770	523	785	533	801	543	816
			6	2.54	318	497	747	505	759	513	771	521	782
			7	4.78	229	472	709	477	717	483	726	489	734

ASD	LRFD
$\Omega_b = 1.67$	$\phi_b = 0.90$

[a] $Y1$ = distance from top of the steel beam to plastic neutral axis
[b] $Y2$ = distance from top of the steel beam to concrete flange force
[c] See Figure 3-3c for PNA locations.

Table 3-19 (continued)

Composite W-Shapes

Available Strength in Flexure, kip-ft

F_y = 50 ksi

W24-W21

Shape	$Y2^b$, in.													
	4		4.5		5		5.5		6		6.5		7	
	ASD	LRFD	ASD	LRFD	ASD	LRFD	ASD	LRFD	ASD	LRFD	ASD	LRFD	ASD	LRFD
W24×62	720	1080	742	1120	765	1150	788	1180	811	1220	833	1250	856	1290
	699	1050	719	1080	739	1110	759	1140	779	1170	799	1200	819	1230
	677	1020	694	1040	712	1070	729	1100	747	1120	764	1150	782	1180
	654	983	669	1010	684	1030	699	1050	714	1070	729	1100	744	1120
	631	948	643	967	655	985	668	1000	680	1020	692	1040	705	1060
	591	889	600	902	609	916	618	929	627	943	636	956	645	970
	531	798	537	807	543	816	548	824	554	833	560	841	565	850
W24×55	639	960	659	990	679	1020	699	1050	719	1080	740	1110	760	1140
	621	933	639	960	657	987	675	1010	693	1040	711	1070	729	1100
	602	905	618	929	634	953	650	976	665	1000	681	1020	697	1050
	583	876	597	897	610	917	624	938	637	958	651	978	665	999
	564	847	575	864	586	881	598	898	609	915	620	932	632	950
	526	791	534	803	543	816	551	828	559	840	567	853	576	865
	469	705	474	713	479	720	484	728	489	735	494	743	499	751
W21×73	783	1180	810	1220	837	1260	864	1300	890	1340	917	1380	944	1420
	752	1130	775	1160	798	1200	821	1230	844	1270	867	1300	890	1340
	719	1080	738	1110	757	1140	777	1170	796	1200	815	1220	834	1250
	685	1030	700	1050	715	1080	731	1100	746	1120	761	1140	777	1170
	649	976	661	993	672	1010	684	1030	695	1040	707	1060	718	1080
	623	936	632	949	641	963	650	977	659	990	668	1000	677	1020
	586	881	593	891	599	901	606	911	613	921	620	931	626	941
W21×68	726	1090	751	1130	776	1170	801	1200	826	1240	851	1280	876	1320
	697	1050	719	1080	740	1110	761	1140	783	1180	804	1210	826	1240
	667	1000	685	1030	703	1060	721	1080	739	1110	757	1140	774	1160
	636	956	650	977	664	999	679	1020	693	1040	708	1060	722	1080
	603	907	614	923	625	939	636	956	647	972	657	988	668	1000
	578	868	586	881	595	894	603	907	612	920	620	933	629	945
	543	816	549	825	555	834	561	844	568	853	574	862	580	872
W21×62	662	995	685	1030	708	1060	731	1100	753	1130	776	1170	799	1200
	636	956	656	986	676	1020	695	1050	715	1070	735	1100	754	1130
	610	916	626	941	643	966	659	991	676	1020	692	1040	709	1070
	582	874	595	895	609	915	622	935	635	955	649	975	662	995
	553	831	563	847	573	862	584	877	594	893	604	908	614	923
	529	794	536	806	544	818	552	830	560	842	568	854	576	866
	494	743	500	752	506	760	511	769	517	777	523	786	529	795

ASD	LRFD
$\Omega_b = 1.67$	$\phi_b = 0.90$

[a] Y1 = distance from top of the steel beam to plastic neutral axis
[b] Y2 = distance from top of the steel beam to concrete flange force
[c] See Figure 3-3c for PNA locations.

W21

Table 3-19 (continued)
Composite W-Shapes
Available Strength in Flexure, kip-ft

F_y = 50 ksi

Shape	M_p/Ω_b kip-ft ASD	$\phi_b M_p$ kip-ft LRFD	PNA[c]	Y1[a] in.	ΣQ_n kip	Y2[b], in. 2 ASD	2 LRFD	2.5 ASD	2.5 LRFD	3 ASD	3 LRFD	3.5 ASD	3.5 LRFD
W21×57	322	484	TFL	0	835	523	786	544	817	565	849	585	880
			2	0.163	728	512	769	530	797	548	824	566	851
			3	0.325	622	500	751	515	775	531	798	546	821
			4	0.488	515	487	732	500	751	513	771	526	790
			BFL	0.650	409	473	712	484	727	494	742	504	758
			6	2.93	309	455	684	463	695	470	707	478	718
			7	5.40	209	424	637	429	645	435	653	440	661
W21×55	314	473	TFL	0	810	501	753	521	784	542	814	562	844
			2	0.131	703	490	737	508	763	525	789	543	816
			3	0.261	595	478	719	493	741	508	764	523	786
			4	0.392	488	466	700	478	719	490	737	502	755
			BFL	0.522	381	453	681	462	695	472	709	481	723
			6	2.62	292	437	657	445	668	452	679	459	690
			7	5.00	203	411	618	417	626	422	634	427	641
W21×50	274	413	TFL	0	735	455	684	473	711	491	739	510	766
			2	0.134	648	446	670	462	694	478	719	494	743
			3	0.268	560	436	656	450	677	464	698	478	719
			4	0.401	473	426	640	438	658	450	676	461	694
			BFL	0.535	386	415	624	425	639	435	653	444	668
			6	2.91	285	397	597	404	607	411	618	418	629
			7	5.56	184	366	550	370	557	375	563	379	570
W21×48	265	398	TFL	0	705	433	650	450	677	468	703	485	730
			2	0.108	617	424	637	439	660	455	683	470	706
			3	0.215	530	414	623	428	643	441	662	454	682
			4	0.323	442	404	608	415	624	426	641	437	658
			BFL	0.430	355	394	592	403	606	412	619	421	632
			6	2.71	266	379	569	385	579	392	589	398	599
			7	5.26	176	352	529	356	535	361	542	365	549
W21×44	238	358	TFL	0	650	401	602	417	626	433	651	449	675
			2	0.113	577	393	591	407	612	422	634	436	656
			3	0.225	504	385	579	398	598	410	617	423	636
			4	0.338	431	377	566	388	583	398	599	409	615
			BFL	0.450	358	368	553	377	567	386	580	395	594
			6	2.92	260	351	527	357	537	364	547	370	556
			7	5.71	163	320	481	324	487	328	493	332	499

ASD	LRFD
Ω_b = 1.67	ϕ_b = 0.90

[a] Y1 = distance from top of the steel beam to plastic neutral axis
[b] Y2 = distance from top of the steel beam to concrete flange force
[c] See Figure 3-3c for PNA locations.

Table 3-19 (continued)

Composite W-Shapes

Available Strength in Flexure, kip-ft

F_y = 50 ksi

W21

Shape	Y2[b], in.													
	4		4.5		5		5.5		6		6.5		7	
	ASD	LRFD	ASD	LRFD	ASD	LRFD	ASD	LRFD	ASD	LRFD	ASD	LRFD	ASD	LRFD
W21×57	606	911	627	943	648	974	669	1010	690	1040	710	1070	731	1100
	585	879	603	906	621	933	639	960	657	988	675	1020	694	1040
	562	845	577	868	593	891	609	915	624	938	640	961	655	985
	539	809	551	829	564	848	577	867	590	887	603	906	616	925
	514	773	524	788	535	804	545	819	555	834	565	850	575	865
	486	730	493	742	501	753	509	765	517	776	524	788	532	800
	445	669	450	677	455	684	461	692	466	700	471	708	476	716
W21×55	582	875	602	905	622	936	643	966	663	996	683	1030	703	1060
	560	842	578	868	595	895	613	921	630	948	648	974	665	1000
	538	808	553	831	568	853	582	875	597	898	612	920	627	942
	515	774	527	792	539	810	551	828	563	847	576	865	588	883
	491	738	500	752	510	766	519	781	529	795	538	809	548	823
	466	701	474	712	481	723	488	734	496	745	503	756	510	767
	432	649	437	656	442	664	447	672	452	679	457	687	462	695
W21×50	528	794	546	821	565	849	583	876	601	904	620	932	638	959
	510	767	527	791	543	816	559	840	575	864	591	889	607	913
	492	740	506	761	520	782	534	803	548	824	562	845	576	866
	473	711	485	729	497	747	509	764	520	782	532	800	544	818
	454	682	463	696	473	711	483	725	492	740	502	754	512	769
	425	639	433	650	440	661	447	671	454	682	461	693	468	704
	384	577	389	584	393	591	398	598	402	605	407	612	412	619
W21×48	503	756	521	783	538	809	556	835	573	862	591	888	609	915
	485	729	501	753	516	776	532	799	547	822	562	845	578	868
	467	702	480	722	494	742	507	762	520	782	533	802	547	821
	449	674	460	691	471	707	482	724	493	741	504	757	515	774
	429	645	438	659	447	672	456	685	465	699	474	712	483	725
	405	609	412	619	418	629	425	639	432	649	438	659	445	669
	369	555	374	562	378	568	383	575	387	582	391	588	396	595
W21×44	465	700	482	724	498	748	514	773	530	797	547	821	563	846
	451	677	465	699	479	721	494	742	508	764	523	785	537	807
	435	654	448	673	461	692	473	711	486	730	498	749	511	768
	420	631	431	647	441	663	452	679	463	696	474	712	484	728
	404	607	413	620	422	634	431	647	440	661	448	674	457	687
	377	566	383	576	390	586	396	595	403	605	409	615	416	625
	336	505	340	511	344	518	348	524	352	530	357	536	361	542

ASD	LRFD
Ω_b = 1.67	ϕ_b = 0.90

[a] Y1 = distance from top of the steel beam to plastic neutral axis
[b] Y2 = distance from top of the steel beam to concrete flange force
[c] See Figure 3-3c for PNA locations.

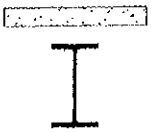

W18

Table 3-19 (continued)
Composite W-Shapes
Available Strength in Flexure, kip-ft

F_y = 50 ksi

Shape	M_p/Ω_b kip-ft ASD	$\phi_b M_p$ kip-ft LRFD	PNA[c]	$Y1$[a]	ΣQ_n	$Y2$[b], in. 2 ASD	2 LRFD	2.5 ASD	2.5 LRFD	3 ASD	3 LRFD	3.5 ASD	3.5 LRFD
				in.	kip								
W18×60	307	461	TFL	0	880	487	733	509	766	531	799	553	832
			2	0.174	749	474	712	492	740	511	768	530	796
			3	0.348	617	459	690	474	713	490	736	505	759
			4	0.521	486	443	666	455	684	467	702	479	720
			BFL	0.695	355	426	640	435	653	444	667	452	680
			6	2.18	287	414	623	422	634	429	644	436	655
			7	3.80	220	398	598	403	606	409	614	414	623
W18×55	279	420	TFL	0	810	447	671	467	702	487	732	507	762
			2	0.158	691	434	653	452	679	469	705	486	731
			3	0.315	573	421	633	435	654	450	676	464	697
			4	0.473	454	407	612	418	629	430	646	441	663
			BFL	0.630	336	392	589	400	602	409	614	417	627
			6	2.15	269	381	572	387	582	394	592	401	603
			7	3.86	203	364	547	369	555	374	563	379	570
W18×50	252	379	TFL	0	735	403	606	422	634	440	662	458	689
			2	0.143	628	392	590	408	613	424	637	439	660
			3	0.285	521	381	572	394	592	407	611	420	631
			4	0.428	414	368	553	378	569	389	584	399	600
			BFL	0.570	308	355	533	362	545	370	556	378	568
			6	2.08	246	345	518	351	527	357	537	363	546
			7	3.82	184	329	495	334	502	339	509	343	516
W18×46	226	340	TFL	0	675	372	559	389	585	406	610	423	635
			2	0.151	583	363	545	377	567	392	589	406	611
			3	0.303	492	353	530	365	548	377	567	389	585
			4	0.454	400	342	513	352	528	362	543	372	558
			BFL	0.605	308	330	496	338	508	345	519	353	531
			6	2.42	239	318	478	324	487	330	496	336	505
			7	4.36	169	299	450	303	456	308	462	312	469
W18×40	196	294	TFL	0	590	322	485	337	507	352	529	367	551
			2	0.131	511	314	472	327	491	340	511	352	530
			3	0.263	432	306	459	316	475	327	492	338	508
			4	0.394	353	296	445	305	459	314	472	323	485
			BFL	0.525	274	287	431	294	441	300	451	307	462
			6	2.26	211	276	415	282	423	287	431	292	439
			7	4.27	148	260	390	263	396	267	401	271	407

ASD	LRFD
$\Omega_b = 1.67$	$\phi_b = 0.90$

[a] $Y1$ = distance from top of the steel beam to plastic neutral axis
[b] $Y2$ = distance from top of the steel beam to concrete flange force
[c] See Figure 3-3c for PNA locations.

Table 3-19 (continued)

Composite W-Shapes

Available Strength in Flexure, kip-ft

F_y = 50 ksi

W18

Shape	Y2[b], in.													
	4		4.5		5		5.5		6		6.5		7	
	ASD	LRFD	ASD	LRFD	ASD	LRFD	ASD	LRFD	ASD	LRFD	ASD	LRFD	ASD	LRFD
W18×60	575	865	597	898	619	931	641	964	663	997	685	1030	707	1060
	548	824	567	852	586	880	605	909	623	937	642	965	661	993
	521	782	536	805	551	829	567	852	582	875	598	898	613	921
	491	739	504	757	516	775	528	793	540	812	552	830	564	848
	461	693	470	707	479	720	488	733	497	747	506	760	514	773
	443	666	450	677	457	688	465	698	472	709	479	720	486	731
	420	631	425	639	431	647	436	656	442	664	447	672	453	680
W18×55	527	793	548	823	568	854	588	884	608	914	629	945	649	975
	503	756	521	782	538	808	555	834	572	860	590	886	607	912
	478	719	493	740	507	762	521	783	535	805	550	826	564	848
	452	680	464	697	475	714	486	731	498	748	509	765	520	782
	425	639	434	652	442	664	450	677	459	690	467	702	476	715
	408	613	414	623	421	633	428	643	434	653	441	663	448	673
	384	578	389	585	395	593	400	601	405	608	410	616	415	623
W18×50	477	717	495	744	513	772	532	799	550	827	568	854	587	882
	455	684	471	708	486	731	502	755	518	778	533	802	549	825
	433	650	446	670	459	689	472	709	485	728	498	748	511	767
	409	615	420	631	430	646	440	662	451	677	461	693	471	708
	385	579	393	591	401	602	408	614	416	625	424	637	431	649
	369	555	375	564	381	573	388	583	394	592	400	601	406	610
	348	523	352	530	357	537	362	543	366	550	371	557	375	564
W18×46	440	661	456	686	473	711	490	737	507	762	524	787	541	813
	421	633	435	655	450	676	465	698	479	720	494	742	508	764
	402	604	414	622	426	640	438	659	451	677	463	696	475	714
	382	573	392	588	402	603	412	618	421	633	431	648	441	663
	361	542	369	554	376	565	384	577	392	589	399	600	407	612
	342	514	348	523	354	532	360	541	366	550	372	559	378	568
	316	475	320	481	325	488	329	494	333	500	337	507	341	513
W18×40	381	573	396	595	411	617	425	639	440	662	455	684	470	706
	365	549	378	568	391	587	403	606	416	626	429	645	442	664
	349	524	359	540	370	556	381	573	392	589	403	605	413	621
	332	498	340	512	349	525	358	538	367	551	376	565	384	578
	314	472	321	482	328	493	335	503	341	513	348	523	355	534
	297	447	303	455	308	463	313	471	318	479	324	486	329	494
	274	412	278	418	282	424	286	429	289	435	293	440	297	446

ASD	LRFD
Ω_b = 1.67	ϕ_b = 0.90

[a] Y1 = distance from top of the steel beam to plastic neutral axis
[b] Y2 = distance from top of the steel beam to concrete flange force
[c] See Figure 3-3c for PNA locations.

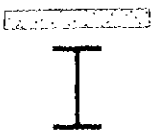

W18-W16

Table 3-19 (continued)
Composite W-Shapes
Available Strength in Flexure, kip-ft

F_y = 50 ksi

Shape	M_p/Ω_b kip-ft ASD	$\phi_b M_p$ kip-ft LRFD	PNA[c]	$Y1$[a] in.	ΣQ_n kip	$Y2$[b], in. = 2 ASD	2 LRFD	2.5 ASD	2.5 LRFD	3 ASD	3 LRFD	3.5 ASD	3.5 LRFD
W18×35	166	249	TFL	0	515	279	419	292	438	305	458	317	477
			2	0.106	451	272	409	284	426	295	443	306	460
			3	0.213	388	265	399	275	413	285	428	294	443
			4	0.319	324	258	388	266	400	274	412	282	425
			BFL	0.425	260	251	377	257	387	264	396	270	406
			6	2.37	194	240	360	245	368	250	375	254	382
			7	4.56	129	222	334	225	338	228	343	232	348
W16×45	205	309	TFL	0	665	333	501	350	526	367	551	383	576
			2	0.141	566	323	486	337	507	351	528	366	549
			3	0.283	466	312	469	324	487	336	504	347	522
			4	0.424	367	301	452	310	466	319	479	328	493
			BFL	0.565	267	288	433	295	443	302	453	308	463
			6	1.77	217	280	421	286	430	291	438	297	446
			7	3.23	166	269	404	273	411	277	417	281	423
W16×40	182	274	TFL	0	590	294	443	309	465	324	487	339	509
			2	0.126	502	285	429	298	448	310	466	323	485
			3	0.253	413	276	414	286	430	296	445	307	461
			4	0.379	325	265	399	274	411	282	423	290	436
			BFL	0.505	237	255	383	261	392	267	401	272	409
			6	1.70	192	248	373	253	380	258	387	262	394
			7	3.16	148	238	358	242	363	246	369	249	375
W16×36	160	240	TFL	0	530	263	396	276	415	290	435	303	455
			2	0.108	455	255	384	267	401	278	418	289	435
			3	0.215	380	247	372	257	386	266	400	276	414
			4	0.323	305	239	359	246	370	254	382	262	393
			BFL	0.430	229	230	346	236	354	241	363	247	371
			6	1.82	181	223	334	227	341	232	348	236	355
			7	3.46	133	211	318	215	323	218	328	221	333
W16×31	135	203	TFL	0	457	227	341	238	358	249	375	261	392
			2	0.110	396	220	331	230	346	240	361	250	376
			3	0.220	335	214	321	222	334	231	347	239	359
			4	0.330	274	207	311	214	321	221	332	227	342
			BFL	0.440	213	200	300	205	308	210	316	216	324
			6	2.00	164	192	289	196	295	200	301	204	307
			7	3.80	114	180	270	183	275	186	279	188	283

ASD	LRFD
Ω_b = 1.67	ϕ_b = 0.90

[a] $Y1$ = distance from top of the steel beam to plastic neutral axis
[b] $Y2$ = distance from top of the steel beam to concrete flange force
[c] See Figure 3-3c for PNA locations.

Table 3-19 (continued)

Composite W-Shapes

Available Strength in Flexure, kip-ft

F_y = 50 ksi

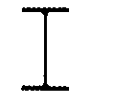

W18-W16

Shape	$Y2^b$, in.													
	4		4.5		5		5.5		6		6.5		7	
	ASD	LRFD	ASD	LRFD	ASD	LRFD	ASD	LRFD	ASD	LRFD	ASD	LRFD	ASD	LRFD
W18×35	330	496	343	516	356	535	369	554	382	574	394	593	407	612
	317	477	329	494	340	511	351	528	362	545	374	562	385	578
	304	457	314	472	323	486	333	501	343	515	352	530	362	544
	291	437	299	449	307	461	315	473	323	485	331	497	339	510
	277	416	283	426	290	435	296	445	303	455	309	465	316	474
	259	390	264	397	269	404	274	411	279	419	283	426	288	433
	235	353	238	358	241	363	244	367	248	372	251	377	254	382
W16×45	400	601	416	626	433	651	450	676	466	701	483	726	499	751
	380	571	394	592	408	613	422	634	436	655	450	677	464	698
	359	539	370	557	382	574	394	592	405	609	417	627	429	644
	337	507	346	521	355	534	365	548	374	562	383	576	392	589
	315	473	322	483	328	493	335	503	342	513	348	523	355	533
	302	454	307	462	313	470	318	478	324	486	329	495	334	503
	286	429	290	436	294	442	298	448	302	454	306	460	310	467
W16×40	353	531	368	553	383	575	397	597	412	620	427	642	442	664
	335	504	348	523	360	542	373	561	385	579	398	598	410	617
	317	476	327	492	338	507	348	523	358	538	368	554	379	569
	298	448	306	460	314	472	322	484	330	496	338	509	347	521
	278	418	284	427	290	436	296	445	302	454	308	463	314	472
	267	401	272	409	277	416	282	423	286	430	291	438	296	445
	253	380	257	386	260	391	264	397	268	402	271	408	275	413
W16×36	316	475	329	495	342	515	356	535	369	555	382	574	395	594
	301	452	312	469	324	486	335	503	346	520	358	537	369	555
	285	429	295	443	304	457	314	471	323	486	333	500	342	514
	269	405	277	416	284	428	292	439	300	450	307	462	315	473
	253	380	259	389	264	397	270	406	276	414	281	423	287	432
	241	362	245	368	250	375	254	382	259	389	263	396	268	402
	225	338	228	343	231	348	235	353	238	358	241	363	245	367
W16×31	272	409	284	426	295	443	306	460	318	478	329	495	341	512
	260	391	270	405	280	420	290	435	299	450	309	465	319	480
	247	372	256	384	264	397	272	409	281	422	289	434	297	447
	234	352	241	362	248	373	255	383	262	393	268	404	275	414
	221	332	226	340	232	348	237	356	242	364	248	372	253	380
	208	313	212	319	216	325	221	332	225	338	229	344	233	350
	191	287	194	292	197	296	200	300	203	304	205	309	208	313

ASD	LRFD
Ω_b = 1.67	ϕ_b = 0.90

[a] $Y1$ = distance from top of the steel beam to plastic neutral axis
[b] $Y2$ = distance from top of the steel beam to concrete flange force
[c] See Figure 3-3c for PNA locations.

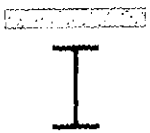

W16-W14

Table 3-19 (continued)
Composite W-Shapes
Available Strength in Flexure, kip-ft

F_y = 50 ksi

Shape	M_p/Ω_b kip-ft ASD	$\phi_b M_p$ kip-ft LRFD	PNA[c]	$Y1$[a] in.	ΣQ_n kip	$Y2$[b], in. = 2 ASD	2 LRFD	2.5 ASD	2.5 LRFD	3 ASD	3 LRFD	3.5 ASD	3.5 LRFD
W16×26	110	166	TFL	0	384	189	284	198	298	208	312	217	327
			2	0.0863	337	184	276	192	289	201	302	209	314
			3	0.173	289	179	269	186	280	193	291	201	301
			4	0.259	242	174	261	180	270	186	279	192	288
			BFL	0.345	194	168	253	173	260	178	267	183	275
			6	2.05	145	161	241	164	247	168	252	171	258
			7	4.01	96.0	148	223	151	226	153	230	155	234
W14×38	153	231	TFL	0	560	253	380	267	401	281	422	295	443
			2	0.129	473	244	367	256	384	268	402	279	420
			3	0.258	386	234	352	244	367	254	381	263	396
			4	0.386	299	224	337	232	348	239	360	247	371
			BFL	0.515	211	214	321	219	329	224	337	229	345
			6	1.38	176	209	313	213	320	217	327	222	333
			7	2.53	140	201	303	205	308	208	313	212	319
W14×34	136	205	TFL	0	500	225	338	237	356	250	375	262	394
			2	0.114	423	217	326	227	342	238	357	248	373
			3	0.228	346	208	313	217	326	226	339	234	352
			4	0.341	270	200	300	206	310	213	320	220	330
			BFL	0.455	193	190	286	195	293	200	301	205	308
			6	1.42	159	186	279	190	285	193	291	197	297
			7	2.61	125	179	269	182	273	185	278	188	283
W14×30	118	177	TFL	0	443	197	295	208	312	219	329	230	345
			2	0.0963	378	190	285	199	300	209	314	218	328
			3	0.193	313	183	275	191	287	199	298	206	310
			4	0.289	248	176	264	182	273	188	283	194	292
			BFL	0.385	183	168	253	173	260	177	266	182	273
			6	1.46	147	163	245	167	250	170	256	174	261
			7	2.80	111	156	234	158	238	161	242	164	246
W14×26	100	151	TFL	0	385	172	258	181	273	191	287	201	301
			2	0.105	332	166	250	175	262	183	275	191	287
			3	0.210	279	161	241	168	252	175	262	182	273
			4	0.315	226	155	232	160	241	166	249	172	258
			BFL	0.420	173	148	223	153	230	157	236	161	243
			6	1.67	135	143	215	146	220	149	225	153	230
			7	3.18	96.1	134	202	137	205	139	209	141	213

ASD	LRFD
Ω_b = 1.67	ϕ_b = 0.90

[a] $Y1$ = distance from top of the steel beam to plastic neutral axis
[b] $Y2$ = distance from top of the steel beam to concrete flange force
[c] See Figure 3-3c for PNA locations.

Table 3-19 (continued)

Composite W-Shapes

Available Strength in Flexure, kip-ft

F_y = 50 ksi

W16-W14

Shape	$Y2^b$, in.													
	4		4.5		5		5.5		6		6.5		7	
	ASD	LRFD	ASD	LRFD	ASD	LRFD	ASD	LRFD	ASD	LRFD	ASD	LRFD	ASD	LRFD
W16×26	227	341	237	356	246	370	256	384	265	399	275	413	285	428
	218	327	226	340	234	352	243	365	251	377	259	390	268	403
	208	312	215	323	222	334	229	345	237	356	244	366	251	377
	198	297	204	306	210	315	216	324	222	333	228	343	234	352
	188	282	192	289	197	296	202	304	207	311	212	318	217	326
	175	263	179	268	182	274	186	279	189	285	193	290	197	296
	158	237	160	241	163	244	165	248	167	252	170	255	172	259
W14×38	309	464	323	485	337	506	351	527	365	548	379	569	393	590
	291	438	303	455	315	473	327	491	338	508	350	526	362	544
	273	410	283	425	292	439	302	454	311	468	321	482	331	497
	254	382	262	393	269	404	276	416	284	427	291	438	299	449
	235	353	240	361	245	369	250	376	256	384	261	392	266	400
	226	340	230	346	235	353	239	360	244	366	248	373	252	379
	215	324	219	329	222	334	226	340	229	345	233	350	236	355
W14×34	274	413	287	431	299	450	312	469	324	488	337	506	349	525
	259	389	269	405	280	421	291	437	301	453	312	468	322	484
	243	365	252	378	260	391	269	404	277	417	286	430	295	443
	227	340	233	351	240	361	247	371	253	381	260	391	267	401
	210	315	214	322	219	330	224	337	229	344	234	351	239	359
	201	303	205	309	209	315	213	321	217	327	221	333	225	338
	191	287	194	292	197	297	201	301	204	306	207	311	210	316
W14×30	241	362	252	378	263	395	274	412	285	428	296	445	307	461
	228	342	237	356	246	370	256	385	265	399	275	413	284	427
	214	322	222	334	230	345	238	357	245	369	253	381	261	392
	201	301	207	311	213	320	219	329	225	339	231	348	238	357
	186	280	191	287	196	294	200	301	205	308	209	315	214	321
	178	267	181	273	185	278	189	284	192	289	196	295	200	300
	167	250	169	255	172	259	175	263	178	267	180	271	183	275
W14×26	210	316	220	330	229	345	239	359	248	373	258	388	268	402
	199	300	208	312	216	325	224	337	233	349	241	362	249	374
	188	283	195	294	202	304	209	315	216	325	223	336	230	346
	177	266	183	275	188	283	194	292	200	300	205	309	211	317
	166	249	170	256	174	262	179	269	183	275	187	282	192	288
	156	235	160	240	163	245	166	250	170	255	173	260	176	265
	144	216	146	220	149	223	151	227	153	231	156	234	158	238

ASD	LRFD
$\Omega_b = 1.67$	$\phi_b = 0.90$

[a] $Y1$ = distance from top of the steel beam to plastic neutral axis
[b] $Y2$ = distance from top of the steel beam to concrete flange force
[c] See Figure 3-3c for PNA locations.

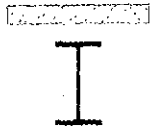

W14-W12

Table 3-19 (continued)
Composite W-Shapes
Available Strength in Flexure, kip-ft

F_y = 50 ksi

Shape	M_p/Ω_b kip-ft	$\phi_b M_p$ kip-ft	PNA[c]	Y1[a]	ΣQ_n	Y2[b], in.							
						2		2.5		3		3.5	
	ASD	LRFD		in.	kip	ASD	LRFD	ASD	LRFD	ASD	LRFD	ASD	LRFD
W14×22	82.8	125	TFL	0	325	143	215	151	228	159	240	168	252
			2	0.0838	283	139	209	146	220	153	230	160	241
			3	0.168	241	135	202	141	211	147	220	153	229
			4	0.251	199	130	195	135	203	140	210	145	218
			BFL	0.335	157	125	188	129	194	133	200	137	206
			6	1.67	119	120	180	123	184	126	189	129	193
			7	3.32	81.1	111	167	113	170	115	173	117	176
W12×30	108	162	TFL	0	440	179	269	190	285	201	302	212	318
			2	0.110	368	171	258	181	271	190	285	199	299
			3	0.220	296	164	246	171	257	178	268	186	279
			4	0.330	224	155	234	161	242	167	251	172	259
			BFL	0.440	153	147	221	151	227	155	232	158	238
			6	1.10	131	144	216	147	221	151	226	154	231
			7	1.92	110	140	211	143	215	146	219	149	223
W12×26	92.8	140	TFL	0	383	155	232	164	247	174	261	183	275
			2	0.0950	321	148	223	156	235	164	247	172	259
			3	0.190	259	142	213	148	223	155	232	161	242
			4	0.285	198	135	203	140	210	145	217	150	225
			BFL	0.380	136	128	192	131	197	134	202	138	207
			6	1.07	116	125	188	128	192	131	197	134	201
			7	1.94	95.6	121	183	124	186	126	190	129	193
W12×22	73.1	110	TFL	0	324	132	198	140	210	148	222	156	234
			2	0.106	281	127	191	134	202	141	213	148	223
			3	0.213	238	123	185	129	193	135	202	141	211
			4	0.319	196	118	177	123	185	128	192	133	199
			BFL	0.425	153	113	170	117	175	120	181	124	187
			6	1.66	117	107	162	110	166	113	170	116	175
			7	3.03	81.0	99.8	150	102	153	104	156	106	159
W12×19	61.6	92.6	TFL	0	279	113	169	120	180	126	190	133	201
			2	0.0875	243	109	164	115	173	121	182	127	191
			3	0.175	208	105	158	110	166	116	174	121	182
			4	0.263	173	101	152	106	159	110	165	114	172
			BFL	0.350	138	97.3	146	101	151	104	157	108	162
			6	1.68	104	92.3	139	94.9	143	97.4	146	100	150
			7	3.14	69.6	84.7	127	86.4	130	88.2	133	89.9	135

ASD	LRFD
$\Omega_b = 1.67$	$\phi_b = 0.90$

[a] Y1 = distance from top of the steel beam to plastic neutral axis
[b] Y2 = distance from top of the steel beam to concrete flange force
[c] See Figure 3-3c for PNA locations.

Table 3-19 (continued)

Composite W-Shapes

Available Strength in Flexure, kip-ft

F_y = 50 ksi

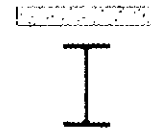

W14-W12

Shape	$Y2^b$, in.													
	4		4.5		5		5.5		6		6.5		7	
	ASD	LRFD	ASD	LRFD	ASD	LRFD	ASD	LRFD	ASD	LRFD	ASD	LRFD	ASD	LRFD
W14×22	176	264	184	276	192	288	200	301	208	313	216	325	224	337
	167	251	174	262	181	273	188	283	195	294	203	304	210	315
	159	238	165	247	171	256	177	266	183	275	189	284	195	293
	150	225	155	233	160	240	165	248	170	255	175	262	180	270
	141	212	145	218	149	223	153	229	157	235	160	241	164	247
	132	198	135	202	138	207	140	211	143	216	146	220	149	225
	119	179	121	182	123	185	125	188	127	191	129	194	131	198
W12×30	223	335	234	351	245	368	255	384	266	400	277	417	288	433
	208	313	217	327	226	340	236	354	245	368	254	382	263	396
	193	290	201	301	208	313	215	324	223	335	230	346	237	357
	178	267	183	276	189	284	195	293	200	301	206	309	211	318
	162	244	166	250	170	255	174	261	177	267	181	272	185	278
	157	236	160	241	164	246	167	251	170	256	173	261	177	266
	151	227	154	232	157	236	160	240	162	244	165	248	168	252
W12×26	193	290	202	304	212	318	221	333	231	347	240	361	250	376
	180	271	188	283	196	295	204	307	212	319	220	331	228	343
	168	252	174	262	181	271	187	281	193	291	200	300	206	310
	155	232	160	240	164	247	169	255	174	262	179	269	184	277
	141	212	145	217	148	222	151	228	156	233	158	238	162	243
	137	205	139	210	142	214	145	218	148	223	151	227	154	231
	131	197	133	200	136	204	138	208	141	211	143	215	145	218
W12×22	164	247	172	259	180	271	188	283	196	295	205	307	213	320
	155	234	162	244	169	255	176	265	183	276	191	286	198	297
	147	220	152	229	158	238	164	247	170	256	176	265	182	274
	137	207	142	214	147	221	152	229	157	236	162	243	167	251
	128	193	132	198	136	204	140	210	143	215	147	221	151	227
	119	179	122	183	125	188	128	192	131	197	134	201	137	205
	108	162	110	165	112	168	114	171	116	174	118	177	120	180
W12×19	140	211	147	221	154	232	161	242	168	253	175	263	182	274
	133	200	139	209	145	219	151	228	158	237	164	246	170	255
	126	189	131	197	136	205	142	213	147	221	152	228	157	236
	119	178	123	185	127	191	132	198	136	204	140	211	145	217
	111	167	115	172	118	177	121	183	125	188	128	193	132	198
	103	154	105	158	108	162	110	166	113	170	116	174	118	178
	91.7	138	93.4	140	95.1	143	96.9	146	98.6	148	100	151	102	153

ASD	LRFD
Ω_b = 1.67	ϕ_b = 0.90

[a] $Y1$ = distance from top of the steel beam to plastic neutral axis
[b] $Y2$ = distance from top of the steel beam to concrete flange force
[c] See Figure 3-3c for PNA locations.

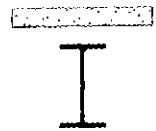

Table 3-19 (continued)
Composite W-Shapes
Available Strength in Flexure, kip-ft

F_y = 50 ksi

W12-W10

Shape	M_p/Ω_b kip-ft	$\phi_b M_p$ kip-ft	PNA[c]	Y1[a]	ΣQ_n	Y2[b], in. 2		2.5		3		3.5	
	ASD	LRFD		in.	kip	ASD	LRFD	ASD	LRFD	ASD	LRFD	ASD	LRFD
W12×16	50.1	75.4	TFL	0	236	94.0	141	99.9	150	106	159	112	168
			2	0.0663	209	91.3	137	96.5	145	102	153	107	161
			3	0.133	183	88.6	133	93.1	140	97.7	147	102	154
			4	0.199	156	85.7	129	89.6	135	93.5	141	97.4	146
			BFL	0.265	130	82.8	124	86.0	129	89.2	134	92.5	139
			6	1.71	94.3	77.6	117	79.9	120	82.3	124	84.6	127
			7	3.32	58.9	69.6	105	71.1	107	72.5	109	74.0	111
W12×14	43.4	65.3	TFL	0	208	82.5	124	87.7	132	92.9	140	98.1	147
			2	0.0563	186	80.3	121	84.9	128	89.5	135	94.2	142
			3	0.113	163	77.9	117	82.0	123	86.1	129	90.2	135
			4	0.169	141	75.5	114	79.1	119	82.6	124	86.1	129
			BFL	0.225	119	73.1	110	76.1	114	79.0	119	82.0	123
			6	1.68	85.3	68.3	103	70.4	106	72.6	109	74.7	112
			7	3.35	52.0	60.8	91.4	62.1	93.3	63.4	95.3	64.7	97.2
W10×26	78.1	117	TFL	0	381	136	204	145	218	155	233	164	247
			2	0.110	317	129	194	137	206	145	218	153	230
			3	0.220	254	122	184	129	193	135	203	141	213
			4	0.330	190	115	173	120	180	125	187	129	195
			BFL	0.440	127	108	162	111	167	114	171	117	176
			6	0.886	111	106	159	108	163	111	167	114	171
			7	1.49	95.1	103	155	105	158	108	162	110	166
W10×22	64.9	97.5	TFL	0	325	115	173	123	185	131	197	139	209
			2	0.0900	273	110	165	116	175	123	185	130	196
			3	0.180	221	104	157	110	165	115	173	121	181
			4	0.270	169	98.4	148	103	154	107	161	111	167
			BFL	0.360	118	92.5	139	95.4	143	98.3	148	101	152
			6	0.962	99.3	90.1	135	92.5	139	95.0	143	97.5	147
			7	1.72	81.1	87.0	131	89.1	134	91.1	137	93.1	140
W10×19	53.9	81.0	TFL	0	281	99.6	150	107	160	114	171	121	181
			2	0.0988	241	95.5	144	102	153	108	162	114	171
			3	0.198	202	91.2	137	96.3	145	101	152	106	160
			4	0.296	162	86.8	130	90.8	137	94.9	143	98.9	149
			BFL	0.395	122	82.1	123	85.2	128	88.2	133	91.3	137
			6	1.25	96.2	78.5	118	80.9	122	83.3	125	85.8	129
			7	2.29	70.3	73.7	111	75.4	113	77.2	116	78.9	119

ASD	LRFD
Ω_b = 1.67	ϕ_b = 0.90

[a] Y1 = distance from top of the steel beam to plastic neutral axis
[b] Y2 = distance from top of the steel beam to concrete flange force
[c] See Figure 3-3c for PNA locations.

Table 3-19 (continued)

Composite W-Shapes

Available Strength in Flexure, kip-ft

F_y = 50 ksi

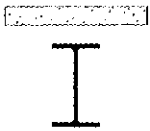

W12-W10

Shape	$Y2^b$, in.													
	4		4.5		5		5.5		6		6.5		7	
	ASD	LRFD	ASD	LRFD	ASD	LRFD	ASD	LRFD	ASD	LRFD	ASD	LRFD	ASD	LRFD
W12×16	118.0	177	123.0	185	129.0	194	135.0	203	141.0	212	147.0	221	153.0	230
	112	169	117	176	123	184	128	192	133	200	138	208	143	216
	107	161	111	167	116	174	120	181	125	188	130	195	134	202
	101	152	105	158	109	164	113	170	117	176	121	182	125	187
	95.7	144	99.0	149	102	154	105	158	109	163	112	168	115	173
	87.0	131	89.4	134	91.7	138	94.1	141	96.4	145	98.8	148	101	152
	75.5	113	77.0	116	78.4	118	79.9	120	81.4	122	82.8	125	84.3	127
W12×14	103	155	108	163	114	171	119	179	124	186	129	194	134	202
	98.8	148	103	155	108	162	113	169	117	176	122	183	127	190
	94.2	142	98.3	148	102	154	106	160	111	166	115	172	119	178
	89.6	135	93.1	140	96.7	145	100	151	104	156	107	161	111	166
	85.0	128	87.9	132	90.9	137	93.9	141	96.8	146	99.8	150	103	154
	76.8	115	79.0	119	81.1	122	83.2	125	85.3	128	87.5	131	89.6	135
	66.0	99.2	67.3	101	68.6	103	69.9	105	71.2	107	72.5	109	73.8	111
W10×26	174	261	183	275	193	290	202	304	212	318	221	332	231	347
	161	242	169	254	177	266	185	277	193	289	200	301	208	313
	148	222	154	232	160	241	167	251	173	260	179	270	186	279
	134	202	139	209	144	216	148	223	153	230	158	237	163	244
	120	181	123	186	127	190	130	195	133	200	136	205	139	209
	117	175	119	179	122	184	125	188	128	192	130	196	133	200
	113	169	115	173	117	176	120	180	122	183	124	187	127	191
W10×22	147	221	155	234	164	246	172	258	180	270	188	282	196	294
	137	206	144	216	151	226	157	236	164	247	171	257	178	267
	126	190	132	198	137	206	143	215	148	223	154	231	159	239
	115	173	120	180	124	186	128	192	132	199	136	205	141	211
	104	157	107	161	110	165	113	170	116	174	119	179	122	183
	100	150	102	154	105	158	107	161	110	165	112	169	115	173
	95.1	143	97.1	146	99.2	149	101	152	103	155	105	158	107	161
W10×19	128	192	135	202	142	213	149	223	156	234	163	244	170	255
	120	180	126	189	132	198	138	207	144	216	150	225	156	234
	111	167	116	175	121	183	126	190	132	198	137	205	142	213
	103	155	107	161	111	167	115	173	119	179	123	185	127	191
	94.3	142	97.4	146	100	151	103	156	107	160	110	165	113	169
	88.2	132	90.6	136	93.0	140	95.4	143	97.8	147	100	151	103	154
	80.7	121	82.4	124	84.2	127	85.9	129	87.7	132	89.4	134	91.2	137

ASD	LRFD
Ω_b = 1.67	ϕ_b = 0.90

[a] Y1 = distance from top of the steel beam to plastic neutral axis
[b] Y2 = distance from top of the steel beam to concrete flange force
[c] See Figure 3-3c for PNA locations.

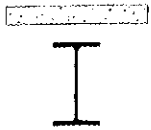

W10

Table 3-19 (continued)
Composite W-Shapes
Available Strength in Flexure, kip-ft

$F_y = 50$ ksi

Shape	M_p/Ω_b kip-ft		$\phi_b M_p$ kip-ft	PNA[c]	$Y1$[a]	ΣQ_n	$Y2$[b], in.							
							2		2.5		3		3.5	
	ASD	LRFD			in.	kip	ASD	LRFD	ASD	LRFD	ASD	LRFD	ASD	LRFD
W10×17	46.7	70.1	TFL	0	250	87.8	132	94.0	141	100	151	106	160	
			2	0.0825	216	84.4	127	89.8	135	95.2	143	101	151	
			3	0.165	183	80.9	122	85.5	128	90.0	135	94.6	142	
			4	0.248	150	77.2	116	81.0	122	84.7	127	88.5	133	
			BFL	0.330	117	73.5	110	78.4	115	79.3	119	82.2	124	
			6	1.31	89.8	69.7	105	71.9	108	74.2	111	76.4	115	
			7	2.45	62.4	64.4	96.8	65.9	99.1	67.5	101	69.1	104	
W10×15	39.9	60.0	TFL	0	221	77.0	116	82.5	124	88.0	132	93.5	140	
			2	0.0675	194	74.2	112	79.1	119	83.9	126	88.7	133	
			3	0.135	167	71.4	107	75.6	114	79.7	120	83.9	126	
			4	0.203	140	68.5	103	72.0	108	75.5	113	78.9	119	
			BFL	0.270	113	65.5	98.4	68.3	103	71.1	107	73.9	111	
			6	1.35	83.8	61.5	92.5	63.6	95.6	65.7	98.7	67.8	102	
			7	2.60	55.1	55.8	83.9	57.2	86.0	58.6	88.0	59.9	90.1	
W10×12	31.2	46.9	TFL	0	177	61.3	92.1	65.7	98.7	70.1	105	74.5	112	
			2	0.0525	156	59.1	88.9	63.0	94.8	66.9	100	70.8	106	
			3	0.105	135	57.0	85.7	60.4	90.7	63.7	95.8	67.1	101	
			4	0.158	115	54.8	82.4	57.7	86.7	60.5	91.0	63.4	95.3	
			BFL	0.210	93.8	52.5	78.9	54.9	82.4	57.2	86.0	59.5	89.5	
			6	1.30	69.0	49.2	73.9	50.9	76.5	52.6	79.1	54.4	81.7	
			7	2.61	44.3	44.3	66.6	45.4	68.2	46.5	69.9	47.6	71.5	

ASD	LRFD
$\Omega_b = 1.67$	$\phi_b = 0.90$

[a] $Y1$ = distance from top of the steel beam to plastic neutral axis.
[b] $Y2$ = distance from top of the steel beam to concrete flange force.
[c] See Figure 3-3c for PNA locations.

Table 3-19 (continued)

Composite W-Shapes

F_y = 50 ksi

Available Strength in Flexure, $\phi_b M_n$ and M_n/Ω_b

kip-ft

W10

Shape	$Y2^b$, in.													
	4		4.5		5		5.5		6		6.5		7	
	ASD	LRFD	ASD	LRFD	ASD	LRFD	ASD	LRFD	ASD	LRFD	ASD	LRFD	ASD	LRFD
W10×17	113.0	169.0	119.0	179.0	125.0	188.0	131.0	197.0	138.0	207.0	144.0	216.0	150.0	225.0
	106	159	111	167	117	176	122	184	128	192	133	200	138	208
	99.2	149	104	156	108	163	113	170	117	177	122	183	127	190
	92.2	139	96.0	144	99.7	150	103	156	107	161	111	167	115	172
	85.2	128	88.1	132	91.0	137	93.9	141	96.8	146	99.8	150	103	154
	78.6	118	80.9	122	83.1	125	85.4	128	87.6	132	89.8	135	92.1	138
	70.6	106	72.2	108	73.7	111	75.3	113	76.8	115	78.4	118	80.0	120
W10×15	99.0	149	104	157	110	165	115	174	121	182	126	190	132	198
	93.5	141	98.4	148	103	155	108	162	113	170	118	177	123	184
	88.0	132	92.2	139	96.3	145	100	151	105	157	109	164	113	170
	82.4	124	85.9	129	89.4	134	92.9	140	96.4	145	99.8	150	103	155
	76.7	115	79.5	120	82.3	124	85.2	128	88.0	132	90.8	136	93.6	141
	69.9	105	72.0	108	74.1	111	76.2	114	78.2	118	80.3	121	82.4	124
	61.3	92.2	62.7	94.2	64.1	96.3	65.4	98.3	66.8	100	68.2	102	69.6	105
W10×12	78.9	119	83.3	125	87.7	132	92.2	139	96.6	145	101	152	105	158
	74.7	112	78.6	118	82.5	124	86.4	130	90.3	136	94.2	142	98.1	147
	70.5	106	73.9	111	77.3	116	80.6	121	84.0	126	87.4	131	90.8	136
	66.2	99.6	69.1	104	72.0	108	74.8	112	77.7	117	80.5	121	83.4	125
	61.9	93.0	64.2	96.5	66.6	100	68.9	104	71.2	107	73.6	111	75.9	114
	56.1	84.3	57.8	86.9	59.5	89.5	61.2	92.1	63.0	94.6	64.7	97.2	66.4	99.8
	48.7	73.2	49.8	74.9	50.9	76.5	52.0	78.2	53.1	79.8	54.2	81.5	55.3	83.2

ASD	LRFD
$\Omega_b = 1.67$	$\phi_b = 0.90$

[a] $Y1$ = distance from top of the steel beam to plastic neutral axis
[b] $Y2$ = distance from top of the steel beam to concrete flange force
[c] See Figure 3-3c for PNA locations.

Table 3-20
Lower-Bound Elastic Moment of Inertia, I_{LB}, for Plastic Composite Sections

I_{LB}

W40

F_y = 50 ksi

Shape[d]	PNA[c]	Y1[a]	ΣQ_n	Y2[b], in.										
		in.	kip	2	2.5	3	3.5	4	4.5	5	5.5	6	6.5	7
W40×297	TFL	0	4370	44100	45100	46100	47100	48100	49200	50300	51400	52500	53600	54800
(23200)	2	0.413	3710	42400	43300	44200	45200	46100	47100	48100	49100	50100	51200	52200
	3	0.825	3060	40500	41300	42100	42900	43800	44600	45500	46400	47300	48300	49200
	4	1.24	2410	38100	38800	39500	40200	40900	41700	42500	43200	44000	44800	45700
	BFL	1.65	1760	35200	35800	36400	36900	37500	38100	38800	39400	40000	40700	41400
	6	4.58	1420	33500	34000	34400	34900	35400	36000	36500	37000	37600	38100	38700
	7	8.17	1090	31600	32000	32300	32800	33200	33600	34000	34500	34900	35400	35800
W40×294	TFL	0	4310	43100	44100	45100	46100	47100	48200	49300	50400	51500	52600	53800
(21900)	2	0.483	3730	41600	42500	43400	44400	45300	46300	47300	48300	49400	50400	51500
	3	0.965	3150	39800	40700	41500	42300	43200	44100	45000	45900	46900	47800	48800
	4	1.45	2570	37800	38500	39200	40000	40800	41500	42300	43200	44000	44900	45700
	BFL	1.93	1990	35300	35900	36600	37200	37800	38500	39200	39900	40600	41300	42000
	6	5.71	1540	33100	33600	34100	34600	35200	35700	36300	36900	37500	38100	38700
	7	10.0	1080	30400	30800	31200	31600	32000	32400	32900	33300	33800	34200	34700
W40×278	TFL	0	4120	40600	41500	42500	43400	44400	45400	46400	47500	48500	49600	50700
(20500)	2	0.453	3570	39200	40000	40900	41800	42700	43600	44600	45600	46500	47600	48600
	3	0.905	3030	37500	38300	39100	39900	40800	41600	42500	43400	44300	45200	46100
	4	1.36	2490	35700	36300	37100	37800	38500	39300	40000	40800	41600	42500	43300
	BFL	1.81	1940	33400	34000	34600	35200	35800	36500	37100	37800	38500	39200	39900
	6	5.67	1490	31200	31700	32200	32700	33200	33700	34300	34800	35400	36000	36600
	7	10.1	1030	28500	28900	29300	29700	30100	30500	30900	31300	31700	32200	32600
W40×277	TFL	0	4080	41400	42300	43200	44100	45100	46100	47100	48100	49100	50200	51300
(21900)	2	0.395	3450	39700	40600	41400	42300	43200	44100	45000	45900	46900	47800	48800
	3	0.790	2830	37800	38600	39300	40100	40900	41700	42500	43400	44200	45100	46000
	4	1.19	2200	35500	36200	36800	37500	38200	38800	39500	40300	41000	41700	42500
	BFL	1.58	1580	32800	33300	33800	34300	34900	35400	36000	36500	37100	37700	38300
	6	4.20	1300	31300	31700	32200	32600	33100	33600	34100	34600	35100	35600	36100
	7	7.58	1020	29700	30100	30400	30800	31200	31600	32000	32400	32800	33200	33700
W40×264	TFL	0	3870	38100	39000	39900	40800	41700	42600	43600	44600	45600	46600	47600
(19400)	2	0.433	3360	36800	37600	38400	39300	40100	41000	41900	42800	43700	44700	45600
	3	0.865	2840	35300	36000	36700	37500	38300	39100	39900	40700	41500	42400	43300
	4	1.30	2330	33500	34100	34800	35500	36200	36900	37600	38300	39100	39800	40600
	BFL	1.73	1810	31300	31900	32400	33000	33600	34200	34800	35400	36100	36700	37400
	6	5.53	1390	29300	29800	30200	30700	31200	31700	32200	32700	33200	33800	34300
	7	9.92	968	26900	27200	27600	28000	28300	28700	29100	29500	29900	30300	30700

[a] Y1 = distance from top of the steel beam to plastic neutral axis
[b] Y2 = distance from top of the steel beam to concrete flange force
[c] See Figure 3-3c for PNA locations.
[d] Value in parentheses is I_x (in.^{4}) of noncomposite steel shape.

Table 3-20 (continued)

Lower-Bound Elastic Moment of Inertia, I_{LB}, for Plastic Composite Sections

F_y = 50 ksi

I_{LB}

W40

Shape[d]	PNA[c]	Y1[a]	ΣQ_n	Y2[b], in.										
		in.	kip	2	2.5	3	3.5	4	4.5	5	5.5	6	6.5	7
W40×249	TFL	0	3680	36900	37700	38500	39400	40300	41100	42000	43000	43900	44800	45800
(19600)	2	0.355	3110	35500	36200	37000	37700	38500	39300	40200	41000	41900	42700	43600
	3	0.710	2550	33800	34400	35100	35800	36500	37200	38000	38700	39500	40300	41100
	4	1.07	1990	31800	32300	32900	33500	34100	34700	35400	36000	36700	37300	38000
	BFL	1.42	1430	29300	29700	30200	30700	31200	31700	32200	32700	33200	33700	34300
	6	4.03	1180	28000	28400	28800	29200	29600	30100	30500	30900	31400	31900	32300
	7	7.45	919	26500	26800	27200	27500	27900	28200	28600	28900	29300	29700	30100
W40×235	TFL	0	3460	33900	34700	35500	36300	37100	37900	38800	39600	40500	41400	42300
(17400)	2	0.395	2980	32700	33400	34100	34800	35600	36400	37200	38000	38800	39600	40500
	3	0.790	2510	31300	31900	32600	33300	33900	34600	35400	36100	36800	37600	38400
	4	1.19	2040	29600	30200	30800	31400	32000	32600	33200	33900	34500	35200	35900
	BFL	1.58	1570	27700	28200	28700	29200	29700	30200	30700	31300	31800	32400	33000
	6	5.16	1220	26000	26400	26800	27200	27700	28100	28500	29000	29400	29900	30400
	7	9.44	864	24000	24300	24600	24900	25300	25600	25900	26300	26600	27000	27400
W40×215	TFL	0	3180	31400	32100	32800	33500	34200	35000	35800	36600	37400	38200	39000
(16700)	2	0.305	2690	30200	30800	31400	32100	32800	33500	34200	34900	35600	36400	37200
	3	0.610	2210	28700	29300	29900	30500	31100	31700	32300	33000	33600	34300	35000
	4	0.915	1730	27100	27500	28000	28500	29100	29600	30100	30700	31300	31800	32400
	BFL	1.22	1250	25000	25400	25800	26200	26600	27000	27500	27900	28400	28800	29300
	6	3.80	1020	23800	24200	24500	24900	25200	25600	26000	26300	26700	27100	27500
	7	7.29	794	22600	22800	23100	23400	23700	24000	24300	24600	25000	25300	25600
W40×211	TFL	0	3110	30100	30800	31500	32200	33000	33700	34500	35200	36000	36800	37700
(15500)	2	0.355	2690	29100	29700	30400	31000	31700	32400	33100	33800	34500	35300	36100
	3	0.710	2270	27800	28400	29000	29600	30200	30900	31500	32200	32800	33500	34200
	4	1.07	1850	26400	26900	27400	28000	28500	29100	29600	30200	30800	31400	32000
	BFL	1.42	1430	24700	25200	25600	26000	26500	27000	27400	27900	28400	28900	29500
	6	5.00	1100	23100	23500	23900	24200	24600	25000	25400	25800	26200	26700	27100
	7	9.35	776	21300	21600	21900	22200	22500	22800	23100	23400	23700	24000	24400
W40×199	TFL	0	2940	28300	28900	29600	30300	30900	31600	32300	33100	33800	34500	35300
(14900)	2	0.268	2520	27300	27900	28500	29100	29700	30300	31000	31700	32300	33000	33700
	3	0.535	2090	26000	26600	27100	27700	28200	28800	29400	30000	30600	31200	31900
	4	0.803	1670	24600	25100	25500	26000	26500	27000	27500	28100	28600	29100	29700
	BFL	1.07	1250	22900	23300	23700	24100	24500	24900	25300	25700	26200	26600	27100
	6	4.09	992	21700	22000	22300	22600	23000	23300	23700	24100	24400	24800	25200
	7	8.04	735	20300	20500	20800	21000	21300	21600	21900	22200	22500	22800	23100

[a] Y1 = distance from top of the steel beam to plastic neutral axis
[b] Y2 = distance from top of the steel beam to concrete flange force
[c] See Figure 3-3c for PNA locations.
[d] Value in parentheses is I_x (in.^{4}) of noncomposite steel shape.

Table 3-20 (continued)

I_{LB} W40-W36 Lower-Bound Elastic Moment of Inertia, I_{LB}, for Plastic Composite Sections

F_y = 50 ksi

Shape[d]	PNA[c]	Y1[a]	ΣQ_n	Y2[b], in.										
		in.	kip	2	2.5	3	3.5	4	4.5	5	5.5	6	6.5	7
W40×183	TFL	0	2670	25500	26100	26700	27300	27900	28600	29200	29900	30500	31200	31900
(13200)	2	0.300	2310	24600	25200	25700	26300	26900	27500	28100	28700	29300	29900	30600
	3	0.600	1960	23600	24100	24600	25100	25700	26200	26800	27300	27900	28500	29100
	4	0.900	1600	22400	22900	23300	23800	24200	24700	25200	25700	26200	26700	27200
	BFL	1.20	1250	21100	21400	21800	22200	22600	23000	23400	23800	24300	24700	25200
	6	4.77	958	19700	20000	20300	20700	21000	21300	21700	22000	22400	22700	23100
	7	9.25	666	18100	18400	18600	18800	19100	19300	19600	19900	20100	20400	20700
W40×167	TFL	0	2470	22800	23300	23900	24400	25000	25600	26200	26800	27400	28000	28700
(11600)	2	0.258	2160	22000	22500	23000	23600	24100	24600	25200	25800	26300	26900	27500
	3	0.515	1860	21200	21700	22100	22600	23100	23600	24100	24600	25200	25700	26300
	4	0.773	1550	20200	20600	21100	21500	21900	22400	22800	23300	23800	24300	24800
	BFL	1.03	1250	19100	19500	19800	20200	20600	21000	21400	21800	22200	22600	23100
	6	4.95	933	17700	18000	18300	18600	18900	19300	19600	19900	20300	20600	21000
	7	9.82	616	16100	16300	16500	16700	17000	17200	17400	17700	17900	18200	18400
W40×149	TFL	0	2190	19600	20000	20500	21000	21500	22000	22500	23100	23600	24200	24700
(9800)	2	0.208	1950	19000	19400	19900	20300	20800	21300	21800	22300	22800	23300	23900
	3	0.415	1700	18300	18700	19100	19600	20000	20500	20900	21400	21900	22300	22800
	4	0.623	1460	17600	18000	18400	18700	19100	19600	20000	20400	20800	21300	21700
	BFL	0.830	1210	16700	17100	17400	17800	18100	18500	18900	19200	19600	20000	20400
	6	5.15	879	15400	15700	15900	16200	16500	16800	17100	17400	17700	18000	18300
	7	10.4	548	13700	13900	14100	14300	14500	14700	14900	15100	15300	15500	15800
W36×302	TFL	0	4450	40100	41000	42000	42900	43900	44900	46000	47100	48100	49200	50400
(21100)	2	0.420	3750	38500	39300	40200	41100	42000	42900	43900	44800	45800	46800	47900
	3	0.840	3050	36500	37300	38100	38900	39700	40500	41300	42200	43100	44000	44900
	4	1.26	2350	34200	34900	35500	36200	36900	37600	38300	39000	39800	40600	41300
	BFL	1.68	1640	31300	31800	32300	32900	33400	33900	34500	35100	35700	36300	36900
	6	4.06	1380	30100	30500	31000	31400	31900	32400	32900	33400	33900	34400	35000
	7	6.88	1110	28700	29000	29400	29800	30200	30600	31000	31500	31900	32300	32800
W36×282	TFL	0	4150	37100	38000	38900	39800	40700	41600	42600	43600	44600	45600	46700
(19600)	2	0.393	3490	35600	36400	37200	38000	38900	39700	40600	41500	42400	43400	44300
	3	0.785	2840	33800	34500	35300	36000	36700	37500	38300	39100	39900	40800	41600
	4	1.18	2190	31700	32300	32900	33500	34200	34800	35500	36200	36900	37600	38300
	BFL	1.57	1540	29100	29600	30000	30500	31000	31500	32100	32600	33100	33700	34300
	6	4.00	1290	27900	28300	28700	29200	29600	30100	30500	31000	31500	31900	32400
	7	6.84	1040	26600	27000	27300	27700	28100	28400	28800	29200	29600	30000	30500

[a] Y1 = distance from top of the steel beam to plastic neutral axis
[b] Y2 = distance from top of the steel beam to concrete flange force
[c] See Figure 3-3c for PNA locations.
[d] Value in parentheses is I_x (in.4) of noncomposite steel shape.

Table 3-20 (continued)

Lower-Bound Elastic Moment of Inertia, I_{LB}, for Plastic Composite Sections

F_y = 50 ksi

I_{LB}

W36

Shape[d]	PNA[c]	Y1[a]	ΣQ_n	Y2[b], in.										
		in.	kip	2	2.5	3	3.5	4	4.5	5	5.5	6	6.5	7
W36×262	TFL	0	3860	34000	34800	35700	36500	37400	38200	39100	40000	41000	41900	42900
(17900)	2	0.360	3260	32700	33400	34200	34900	35700	36500	37300	38200	39000	39900	40800
	3	0.720	2660	31100	31700	32400	33100	33800	34500	35200	36000	36700	37500	38300
	4	1.08	2070	29200	29700	30300	30900	31500	32100	32700	33400	34000	34700	35400
	BFL	1.44	1470	26800	27200	27700	28200	28600	29100	29600	30100	30600	31200	31700
	6	3.96	1220	25700	26000	26400	26800	27200	27700	28100	28500	29000	29400	29900
	7	6.96	965	24400	24700	25000	25300	25700	26000	26400	26800	27100	27500	27900
W36×256	TFL	0	3770	32900	33700	34500	35400	36200	37100	38000	38900	39800	40700	41700
(16800)	2	0.433	3240	31700	32500	33200	34000	34700	35500	36400	37200	38000	38900	39800
	3	0.865	2710	30300	31000	31600	32300	33000	33800	34500	35300	36000	36800	37600
	4	1.30	2180	28600	29200	29800	30400	31000	31700	32300	33000	33600	34300	35000
	BFL	1.73	1650	26600	27100	27600	28100	28600	29100	29700	30200	30800	31400	32000
	6	5.18	1300	25100	25500	25900	26300	26800	27200	27700	28100	28600	29100	29600
	7	8.90	941	23300	23600	23900	24200	24600	24900	25300	25600	26000	26400	26700
W36×247	TFL	0	3630	31700	32500	33200	34000	34800	35600	36500	37300	38200	39100	40000
(16700)	2	0.338	3070	30500	31200	31900	32600	33300	34100	34800	35600	36400	37200	38100
	3	0.675	2510	29000	29600	30200	30900	31500	32200	32900	33600	34300	35000	35800
	4	1.01	1950	27200	27700	28300	28800	29400	29900	30500	31100	31700	32400	33000
	BFL	1.35	1400	25100	25500	25900	26300	26800	27200	27700	28200	28700	29200	29700
	6	3.95	1150	23900	24300	24700	25000	25400	25800	26200	26600	27100	27500	27900
	7	7.02	906	22700	23000	23300	23600	23900	24300	24600	24900	25300	25700	26000
W36×232	TFL	0	3400	29400	30100	30800	31500	32300	33100	33900	34700	35500	36300	37200
(15000)	2	0.393	2930	28300	28900	29600	30300	31000	31700	32500	33200	34000	34800	35500
	3	0.785	2450	27000	27600	28200	28800	29500	30100	30800	31500	32200	32900	33600
	4	1.18	1980	25600	26100	26600	27200	27700	28300	28900	29500	30100	30700	31300
	BFL	1.57	1500	23800	24200	24700	25100	25600	26100	26500	27000	27500	28100	28600
	6	5.04	1180	22400	22800	23100	23500	23900	24300	24700	25100	25600	26000	26400
	7	8.78	850	20700	21000	21300	21600	21900	22200	22500	22900	23200	23500	23900
W36×231	TFL	0	3410	29600	30300	31000	31700	32500	33200	34000	34800	35700	36500	37300
(15600)	2	0.315	2890	28400	29100	29700	30400	31100	31800	32500	33200	34000	34800	35500
	3	0.630	2370	27100	27600	28200	28800	29400	30100	30700	31400	32000	32700	33400
	4	0.945	1850	25400	25900	26400	26900	27500	28000	28600	29100	29700	30300	30900
	BFL	1.26	1330	23400	23800	24200	24700	25100	25500	25900	26400	26900	27300	27800
	6	3.88	1090	22400	22700	23100	23400	23800	24100	24500	24900	25300	25700	26100
	7	7.03	853	21200	21500	21800	22100	22400	22700	23000	23300	23600	24000	24300

[a] Y1 = distance from top of the steel beam to plastic neutral axis
[b] Y2 = distance from top of the steel beam to concrete flange force
[c] See Figure 3-3c for PNA locations.
[d] Value in parentheses is I_x (in.^{4}) of noncomposite steel shape.

Table 3-20 (continued)

I_{LB} W36 Lower-Bound Elastic Moment of Inertia, I_{LB}, for Plastic Composite Sections

F_y = 50 ksi

Shape[d]	PNA[c]	Y1[a]	ΣQ_n	Y2[b], in.										
		in.	kip	2	2.5	3	3.5	4	4.5	5	5.5	6	6.5	7
W36×210	TFL	0	3100	26000	26700	27300	28000	28700	29400	30100	30800	31600	32300	33100
(13200)	2	0.340	2680	25100	25700	26300	26900	27500	28200	28900	29500	30200	30900	31700
	3	0.680	2270	24000	24600	25100	25700	26300	26900	27500	28100	28700	29400	30000
	4	1.02	1850	22800	23300	23800	24300	24800	25300	25800	26400	26900	27500	28100
	BFL	1.36	1440	21300	21700	22200	22600	23000	23500	23900	24400	24900	25300	25800
	6	5.04	1100	19900	20300	20600	20900	21300	21700	22000	22400	22800	23200	23600
	7	9.03	774	18300	18600	18800	19100	19400	19700	20000	20200	20500	20800	21200
W36×194	TFL	0	2850	23800	24400	25000	25600	26200	26900	27500	28200	28900	29600	30300
(12100)	2	0.315	2470	23000	23500	24100	24600	25200	25800	26400	27000	27700	28300	29000
	3	0.630	2090	22000	22500	23000	23500	24000	24600	25100	25700	26300	26900	27500
	4	0.945	1710	20900	21300	21800	22200	22700	23200	23700	24200	24700	25200	25700
	BFL	1.26	1330	19500	19900	20300	20700	21100	21500	21900	22300	22800	23200	23700
	6	4.93	1020	18300	18600	18900	19200	19500	19900	20200	20600	20900	21300	21700
	7	8.94	713	16800	17000	17300	17500	17700	18000	18300	18500	18800	19100	19400
W36×182	TFL	0	2680	22200	22700	23300	23900	24400	25000	25700	26300	26900	27600	28300
(11300)	2	0.295	2320	21400	21900	22400	23000	23500	24100	24600	25200	25800	26400	27000
	3	0.590	1970	20500	21000	21500	21900	22400	22900	23500	24000	24500	25100	25700
	4	0.885	1610	19500	19900	20300	20700	21200	21600	22100	22600	23000	23500	24000
	BFL	1.18	1250	18200	18600	18900	19300	19700	20000	20400	20800	21200	21700	22100
	6	4.89	961	17000	17300	17600	17900	18200	18600	18900	19200	19600	19900	20200
	7	8.91	670	15700	15900	16100	16300	16600	16800	17000	17300	17600	17800	18100
W36×170	TFL	0	2500	20600	21100	21600	22200	22700	23300	23800	24400	25000	25600	26300
(10500)	2	0.275	2170	19900	20400	20800	21300	21800	22400	22900	23400	24000	24600	25100
	3	0.550	1840	19100	19500	19900	20400	20900	21300	21800	22300	22800	23300	23900
	4	0.825	1510	18100	18500	18900	19300	19700	20100	20500	21000	21400	21900	22400
	BFL	1.10	1180	17000	17300	17600	18000	18300	18700	19100	19400	19800	20200	20600
	6	4.83	903	15900	16100	16400	16700	17000	17300	17600	17900	18200	18500	18900
	7	8.91	625	14500	14700	15000	15200	15400	15600	15800	16100	16300	16600	16800
W36×160	TFL	0	2350	19200	19600	20100	20600	21100	21700	22200	22700	23300	23900	24400
(9760)	2	0.255	2040	18500	18900	19400	19900	20300	20800	21300	21800	22300	22900	23400
	3	0.510	1740	17800	18200	18600	19000	19400	19900	20300	20800	21300	21800	22300
	4	0.765	1430	16900	17200	17600	18000	18400	18800	19200	19600	20000	20400	20900
	BFL	1.02	1130	15900	16200	16500	16800	17100	17500	17800	18200	18600	18900	19300
	6	4.82	857	14800	15000	15300	15600	15800	16100	16400	16700	17000	17300	17600
	7	8.96	588	13500	13700	13900	14100	14300	14500	14700	15000	15200	15400	15600

[a] Y1 = distance from top of the steel beam to plastic neutral axis
[b] Y2 = distance from top of the steel beam to concrete flange force
[c] See Figure 3-3c for PNA locations.
[d] Value in parentheses is I_x (in.^{4}) of noncomposite steel shape.

Table 3-20 (continued)

Lower-Bound Elastic Moment of Inertia, I_{LB}, for Plastic Composite Sections

F_y = 50 ksi

I_{LB}

W36-W33

Shape[d]	PNA[c]	Y1[a]	ΣQ_n	Y2[b], in.										
		in.	kip	2	2.5	3	3.5	4	4.5	5	5.5	6	6.5	7
W36×150	TFL	0	2220	17900	18300	18800	19200	19700	20200	20700	21200	21800	22300	22800
(9040)	2	0.235	1930	17200	17700	18100	18500	19000	19400	19900	20400	20900	21400	21900
	3	0.470	1650	16600	16900	17300	17700	18200	18600	19000	19400	19900	20300	20800
	4	0.705	1370	15800	16100	16500	16800	17200	17600	18000	18300	18800	19200	19600
	BFL	0.940	1090	14900	15200	15500	15800	16100	16400	16700	17100	17400	17800	18100
	6	4.82	820	13800	14000	14300	14500	14800	15100	15300	15600	15900	16200	16500
	7	9.09	554	12600	12700	12900	13100	13300	13500	13700	13900	14100	14300	14600
W36×135	TFL	0	2000	15600	16000	16400	16900	17300	17700	18200	18600	19100	19600	20100
(7800)	2	0.198	1760	15100	15500	15900	16300	16700	17100	17500	18000	18400	18800	19300
	3	0.395	1520	14600	14900	15300	15600	16000	16400	16800	17200	17600	18000	18400
	4	0.593	1280	13900	14200	14500	14900	15200	15600	15900	16300	16600	17000	17400
	BFL	0.790	1050	13200	13500	13800	14000	14300	14600	15000	15300	15600	15900	16300
	6	4.92	773	12200	12400	12600	12900	13100	13300	13600	13800	14100	14400	14700
	7	9.49	499	10900	11100	11300	11400	11600	11800	11900	12100	12300	12500	12700
W33×221	TFL	0	3270	24600	25300	25900	26600	27200	27900	28600	29400	30100	30900	31600
(12900)	2	0.320	2760	23600	24200	24800	25400	26000	26700	27300	28000	28700	29300	30100
	3	0.640	2250	22500	23000	23500	24000	24600	25200	25700	26300	26900	27500	28200
	4	0.960	1750	21100	21500	22000	22400	22900	23400	23900	24400	24900	25400	26000
	BFL	1.28	1240	19400	19700	20100	20400	20800	21200	21600	22000	22400	22800	23200
	6	3.67	1030	18500	18800	19100	19400	19800	20100	20400	20800	21100	21500	21900
	7	6.42	816	17600	17800	18100	18400	18600	18900	19200	19500	19800	20100	20400
W33×201	TFL	0	2960	22100	22700	23300	23800	24500	25100	25700	26400	27000	27700	28400
(11600)	2	0.288	2500	21200	21700	22300	22800	23400	23900	24500	25100	25700	26400	27000
	3	0.575	2050	20200	20700	21100	21600	22100	22600	23200	23700	24200	24800	25400
	4	0.863	1600	19000	19400	19800	20200	20600	21100	21500	22000	22400	22900	23400
	BFL	1.15	1150	17500	17800	18100	18500	18800	19100	19500	19900	20200	20600	21000
	6	3.65	944	16700	17000	17200	17500	17800	18100	18400	18700	19100	19400	19700
	7	6.52	739	15800	16000	16300	16500	16700	17000	17200	17500	17800	18000	18300
W33×169	TFL	0	2480	18100	18600	19100	19600	20100	20600	21200	21700	22300	22900	23400
(9290)	2	0.305	2120	17400	17900	18300	18800	19300	19700	20200	20700	21300	21800	22300
	3	0.610	1770	16700	17100	17500	17900	18300	18700	19200	19600	20100	20600	21100
	4	0.915	1420	15700	16100	16400	16800	17200	17600	17900	18300	18800	19200	19600
	BFL	1.22	1070	14600	14900	15200	15500	15800	16100	16500	16800	17100	17500	17800
	6	4.28	845	13800	14000	14300	14500	14800	15100	15300	15600	15900	16200	16500
	7	7.66	619	12800	13000	13200	13400	13600	13800	14000	14300	14500	14700	14900

[a] Y1 = distance from top of the steel beam to plastic neutral axis
[b] Y2 = distance from top of the steel beam to concrete flange force
[c] See Figure 3-3c for PNA locations.
[d] Value in parentheses is I_x (in.^{4}) of noncomposite steel shape.

Table 3-20 (continued)

I_{LB} W33-W30 Lower-Bound Elastic Moment of Inertia, I_{LB}, for Plastic Composite Sections

F_y = 50 ksi

Shape[d]	PNA[c]	$Y1$[a]	ΣQ_n	$Y2$[b], in.										
		in.	kip	2	2.5	3	3.5	4	4.5	5	5.5	6	6.5	7
W33×152	TFL	0	2250	16100	16500	16900	17400	17800	18300	18800	19300	19800	20300	20800
(8160)	2	0.265	1940	15500	15900	16300	16700	17100	17600	18000	18500	18900	19400	19900
	3	0.530	1630	14800	15200	15500	15900	16300	16700	17100	17500	17900	18400	18800
	4	0.795	1320	14000	14300	14600	15000	15300	15700	16000	16400	16800	17100	17500
	BFL	1.06	1020	13100	13400	13600	13900	14200	14500	14800	15100	15400	15700	16100
	6	4.34	788	12300	12500	12700	12900	13200	13400	13700	13900	14200	14500	14700
	7	7.91	561	11300	11500	11700	11800	12000	12200	12400	12600	12800	13000	13200
W33×141	TFL	0	2080	14700	15100	15500	15900	16300	16700	17200	17600	18100	18600	19100
(7450)	2	0.240	1800	14200	14500	14900	15300	15700	16100	16500	16900	17300	17800	18200
	3	0.480	1520	13600	13900	14200	14600	14900	15300	15700	16100	16500	16900	17300
	4	0.720	1250	12900	13200	13500	13800	14100	14400	14800	15100	15500	15800	16200
	BFL	0.960	971	12100	12300	12600	12800	13100	13400	13700	13900	14200	14500	14800
	6	4.34	745	11300	11500	11700	11900	12100	12400	12600	12800	13100	13300	13600
	7	8.08	519	10300	10500	10700	10800	11000	11200	11300	11500	11700	11900	12100
W33×130	TFL	0	1920	13300	13700	14000	14400	14800	15200	15600	16000	16500	16900	17300
(6710)	2	0.214	1670	12800	13200	13500	13900	14200	14600	15000	15400	15800	16200	16600
	3	0.428	1420	12300	12600	12900	13300	13600	13900	14300	14600	15000	15400	15800
	4	0.641	1180	11700	12000	12300	12600	12900	13200	13500	13800	14100	14500	14800
	BFL	0.855	932	11000	11300	11500	11800	12000	12300	12500	12800	13100	13400	13700
	6	4.39	705	10300	10500	10600	10900	11100	11300	11500	11700	12000	12200	12400
	7	8.30	479	9350	9490	9640	9790	9950	10100	10300	10400	10600	10800	11000
W33×118	TFL	0	1740	11800	12100	12500	12800	13200	13500	13900	14300	14700	15100	15500
(5900)	2	0.185	1520	11400	11700	12000	12300	12700	13000	13400	13700	14100	14400	14800
	3	0.370	1310	11000	11300	11500	11800	12100	12500	12800	13100	13400	13800	14100
	4	0.555	1100	10500	10700	11000	11300	11500	11800	12100	12400	12700	13000	13300
	BFL	0.740	884	9890	10100	10300	10600	10800	11000	11300	11500	11800	12100	12300
	6	4.47	659	9150	9330	9510	9700	9890	10100	10300	10500	10700	10900	11200
	7	8.56	434	8260	8390	8530	8660	8800	8950	9090	9250	9400	9560	9720
W30×116	TFL	0	1710	9870	10200	10500	10800	11100	11400	11800	12100	12500	12800	13200
(4930)	2	0.213	1490	9530	9810	10100	10400	10700	11000	11300	11600	12000	12300	12600
	3	0.425	1260	9120	9370	9630	9900	10200	10400	10700	11000	11300	11600	12000
	4	0.638	1040	8670	8890	9120	9360	9600	9850	10100	10400	10600	10900	11200
	BFL	0.850	818	8130	8320	8520	8720	8920	9140	9360	9580	9810	10000	10300
	6	3.98	623	7570	7730	7890	8060	8230	8400	8580	8770	8960	9150	9350
	7	7.43	428	6910	7030	7150	7270	7400	7530	7670	7810	7950	8090	8240

[a] $Y1$ = distance from top of the steel beam to plastic neutral axis
[b] $Y2$ = distance from top of the steel beam to concrete flange force
[c] See Figure 3-3c for PNA locations.
[d] Value in parentheses is I_x (in.^{4}) of noncomposite steel shape.

Table 3-20 (continued)

Lower-Bound Elastic Moment of Inertia, I_{LB}, for Plastic Composite Sections

F_y = 50 ksi

I_{LB}

W30-W27

Shape[d]	PNA[c]	Y1[a]	ΣQ_n	Y2[b], in.										
		in.	kip	2	2.5	3	3.5	4	4.5	5	5.5	6	6.5	7
W30×108	TFL	0	1590	9000	9280	9560	9840	10100	10400	10800	11100	11400	11700	12100
(4470)	2	0.190	1390	8700	8950	9220	9480	9760	10000	10300	10600	10900	11300	11600
	3	0.380	1190	8350	8590	8830	9070	9330	9590	9850	10100	10400	10700	11000
	4	0.570	987	7940	8150	8370	8590	8820	9060	9290	9530	9780	10000	10300
	BFL	0.760	787	7470	7650	7840	8030	8230	8430	8640	8850	9060	9290	9510
	6	4.04	592	6930	7080	7230	7390	7550	7710	7880	8060	8240	8420	8600
	7	7.63	396	6280	6390	6500	6620	6730	6850	6980	7110	7240	7370	7510
W30×99	TFL	0	1450	8110	8350	8610	8870	9140	9420	9700	9980	10300	10600	10900
(3990)	2	0.168	1270	7830	8070	8300	8550	8800	9060	9330	9600	9880	10200	10500
	3	0.335	1100	7540	7760	7980	8200	8440	8670	8920	9170	9430	9690	9960
	4	0.503	922	7190	7380	7580	7790	8000	8210	8430	8660	8890	9130	9370
	BFL	0.670	747	6790	6960	7130	7310	7490	7680	7880	8070	8280	8480	8700
	6	4.19	555	6270	6410	6550	6690	6840	7000	7150	7310	7480	7650	7820
	7	7.88	363	5640	5740	5840	5950	6050	6160	6280	6390	6510	6640	6760
W30×90	TFL	0	1320	7310	7530	7760	8000	8240	8490	8750	9010	9280	9560	9840
(3610)	2	0.153	1160	7070	7280	7490	7720	7940	8180	8420	8660	8920	9180	9440
	3	0.305	998	6790	6990	7190	7390	7600	7820	8040	8260	8500	8730	8980
	4	0.458	839	6480	6660	6840	7020	7210	7410	7610	7810	8020	8240	8460
	BFL	0.610	681	6130	6280	6440	6600	6760	6940	7110	7290	7470	7660	7850
	6	4.01	505	5660	5780	5910	6040	6180	6310	6460	6600	6750	6910	7060
	7	7.76	329	5090	5180	5270	5360	5460	5560	5660	5770	5880	5990	6100
W27×102	TFL	0	1500	7250	7480	7730	7980	8240	8510	8780	9060	9350	9650	9950
(3620)	2	0.208	1290	6970	7190	7420	7650	7890	8140	8390	8650	8920	9200	9480
	3	0.415	1090	6670	6870	7080	7290	7510	7730	7960	8200	8450	8700	8950
	4	0.623	878	6300	6470	6650	6840	7030	7230	7430	7640	7850	8070	8300
	BFL	0.830	670	5860	6010	6160	6310	6470	6640	6810	6980	7160	7340	7530
	6	3.40	523	5500	5620	5740	5870	6010	6150	6290	6430	6580	6740	6900
	7	6.27	375	5070	5170	5260	5360	5470	5570	5680	5800	5910	6030	6150
W27×94	TFL	0	1380	6560	6780	7000	7230	7470	7720	7970	8230	8490	8760	9040
(3270)	2	0.186	1190	6320	6520	6730	6940	7160	7390	7620	7860	8100	8360	8610
	3	0.373	1010	6050	6240	6430	6620	6820	7030	7240	7460	7680	7910	8150
	4	0.559	821	5730	5890	6060	6230	6400	6590	6770	6970	7160	7370	7580
	BFL	0.745	635	5350	5480	5620	5770	5920	6070	6230	6390	6560	6730	6910
	6	3.45	490	5000	5110	5230	5350	5470	5600	5730	5870	6010	6150	6290
	7	6.41	345	4590	4670	4760	4860	4950	5050	5150	5250	5360	5470	5580

[a] Y1 = distance from top of the steel beam to plastic neutral axis
[b] Y2 = distance from top of the steel beam to concrete flange force
[c] See Figure 3-3c for PNA locations.
[d] Value in parentheses is I_x (in.^{4}) of noncomposite steel shape.

Table 3-20 (continued)

I_{LB} W27-W24 Lower-Bound Elastic Moment of Inertia, I_{LB}, for Plastic Composite Sections

F_y = 50 ksi

Shape[d]	PNA[c]	Y1[a]	ΣQ_n	Y2[b], in.										
		in.	kip	2	2.5	3	3.5	4	4.5	5	5.5	6	6.5	7
W27×84	TFL	0	1240	5770	5960	6160	6360	6580	6790	7020	7250	7480	7730	7970
(2850)	2	0.160	1080	5570	5740	5930	6120	6320	6520	6730	6940	7160	7390	7620
	3	0.320	915	5330	5490	5660	5830	6010	6200	6390	6590	6790	6990	7200
	4	0.480	755	5060	5200	5360	5510	5670	5840	6010	6180	6360	6540	6730
	BFL	0.640	595	4740	4870	5000	5130	5270	5410	5550	5700	5860	6010	6180
	6	3.53	452	4410	4510	4620	4730	4840	4960	5080	5200	5330	5460	5590
	7	6.64	309	4010	4090	4170	4250	4340	4430	4510	4610	4700	4800	4900
W24×94	TFL	0	1390	5480	5680	5880	6100	6320	6550	6780	7020	7270	7530	7790
(2700)	2	0.219	1190	5260	5450	5640	5840	6040	6250	6470	6690	6920	7150	7390
	3	0.438	988	5010	5180	5350	5520	5710	5900	6090	6290	6500	6710	6930
	4	0.656	790	4710	4860	5010	5160	5320	5490	5660	5830	6010	6200	6390
	BFL	0.875	591	4360	4480	4600	4730	4860	5000	5140	5280	5430	5580	5740
	6	3.05	469	4100	4200	4310	4420	4530	4640	4760	4880	5010	5140	5270
	7	5.43	346	3810	3890	3970	4060	4140	4230	4330	4420	4520	4630	4730
W24×84	TFL	0	1240	4810	4990	5170	5360	5560	5760	5970	6180	6400	6630	6860
(2370)	2	0.193	1060	4620	4790	4950	5130	5310	5490	5690	5880	6090	6300	6510
	3	0.385	888	4410	4560	4710	4870	5030	5200	5370	5550	5740	5930	6120
	4	0.578	714	4160	4290	4420	4560	4700	4850	5000	5160	5320	5480	5650
	BFL	0.770	540	3850	3960	4070	4190	4310	4430	4550	4680	4820	4960	5100
	6	3.02	425	3620	3710	3800	3900	4000	4100	4210	4320	4430	4550	4660
	7	5.48	309	3350	3420	3490	3570	3640	3720	3810	3890	3980	4070	4160
W24×76	TFL	0	1120	4280	4440	4600	4770	4950	5130	5320	5510	5710	5910	6120
(2100)	2	0.170	967	4120	4270	4420	4580	4740	4910	5080	5260	5440	5630	5830
	3	0.340	814	3930	4070	4210	4350	4500	4650	4810	4970	5140	5310	5490
	4	0.510	662	3720	3840	3960	4090	4220	4350	4490	4630	4780	4930	5090
	BFL	0.680	509	3460	3560	3660	3770	3880	3990	4110	4230	4360	4480	4610
	6	2.99	394	3230	3320	3400	3490	3580	3680	3770	3880	3980	4080	4190
	7	5.59	280	2970	3040	3100	3170	3240	3310	3390	3460	3540	3630	3710
W24×68	TFL	0	1010	3760	3900	4050	4200	4360	4520	4690	4860	5040	5220	5410
(1830)	2	0.146	874	3620	3760	3890	4030	4180	4330	4480	4640	4810	4980	5150
	3	0.293	743	3470	3590	3710	3840	3980	4110	4260	4400	4550	4710	4870
	4	0.439	611	3290	3390	3510	3620	3740	3860	3990	4120	4250	4390	4530
	BFL	0.585	480	3080	3170	3260	3360	3460	3570	3670	3790	3900	4020	4140
	6	3.04	366	2860	2930	3010	3090	3180	3260	3350	3450	3540	3640	3740
	7	5.80	251	2600	2660	2720	2780	2840	2900	2970	3040	3110	3180	3260

[a] $Y1$ = distance from top of the steel beam to plastic neutral axis
[b] $Y2$ = distance from top of the steel beam to concrete flange force
[c] See Figure 3-3c for PNA locations.
[d] Value in parentheses is I_x (in.^{4}) of noncomposite steel shape.

Table 3-20 (continued)

Lower-Bound Elastic Moment of Inertia, I_{LB}, for Plastic Composite Sections

F_y = 50 ksi

I_{LB}

W24-W21

Shape[d]	PNA[c]	Y1[a]	ΣQ_n	Y2[b], in.										
		in.	kip	2	2.5	3	3.5	4	4.5	5	5.5	6	6.5	7
W24×62	TFL	0	910	3300	3420	3560	3690	3840	3980	4130	4290	4450	4610	4780
(1550)	2	0.148	806	3190	3310	3440	3560	3700	3840	3980	4120	4270	4430	4590
	3	0.295	702	3070	3180	3300	3420	3540	3670	3800	3940	4080	4220	4370
	4	0.443	598	2930	3040	3140	3250	3360	3480	3600	3720	3850	3980	4110
	BFL	0.590	495	2780	2870	2960	3060	3160	3260	3370	3480	3590	3710	3830
	6	3.45	361	2540	2610	2690	2770	2850	2930	3020	3110	3200	3290	3390
	7	6.56	228	2250	2300	2350	2410	2470	2520	2590	2650	2710	2780	2850
W24×55	TFL	0	810	2890	3010	3120	3250	3370	3500	3640	3770	3920	4060	4210
(1350)	2	0.126	721	2800	2910	3020	3140	3250	3380	3500	3630	3770	3900	4050
	3	0.253	633	2700	2800	2910	3010	3120	3240	3360	3480	3600	3730	3860
	4	0.379	544	2590	2680	2780	2870	2970	3080	3190	3300	3410	3530	3650
	BFL	0.505	456	2460	2540	2630	2720	2810	2900	3000	3100	3200	3300	3410
	6	3.46	329	2240	2310	2370	2450	2520	2590	2670	2750	2830	2920	3000
	7	6.67	203	1970	2010	2060	2110	2160	2210	2270	2320	2380	2440	2500
W21×73	TFL	0	1080	3310	3450	3590	3740	3900	4060	4220	4390	4570	4750	4940
(1600)	2	0.185	921	3170	3300	3430	3570	3710	3860	4010	4170	4330	4500	4670
	3	0.370	768	3020	3140	3260	3380	3510	3640	3780	3920	4070	4220	4380
	4	0.555	614	2840	2940	3050	3150	3270	3380	3500	3630	3750	3890	4020
	BFL	0.740	461	2620	2710	2790	2880	2980	3070	3170	3270	3380	3490	3600
	6	2.58	365	2470	2540	2610	2680	2760	2840	2930	3010	3100	3190	3290
	7	4.69	269	2280	2340	2400	2460	2520	2580	2650	2720	2790	2860	2930
W21×68	TFL	0	1000	3060	3180	3320	3450	3600	3750	3900	4060	4220	4390	4560
(1480)	2	0.171	858	2930	3050	3180	3300	3440	3570	3710	3860	4010	4160	4320
	3	0.343	717	2800	2900	3010	3130	3250	3370	3500	3630	3770	3910	4050
	4	0.514	575	2630	2720	2820	2920	3030	3130	3250	3360	3480	3600	3730
	BFL	0.685	434	2430	2510	2590	2670	2760	2850	2940	3040	3140	3240	3340
	6	2.60	342	2280	2350	2420	2490	2560	2630	2710	2790	2880	2960	3050
	7	4.74	250	2110	2160	2210	2270	2330	2390	2450	2510	2580	2640	2710
W21×62	TFL	0	915	2760	2880	3000	3120	3250	3390	3530	3670	3820	3970	4130
(1330)	2	0.154	788	2650	2760	2870	2990	3110	3240	3360	3500	3640	3780	3920
	3	0.308	662	2530	2630	2730	2840	2950	3060	3180	3300	3420	3550	3680
	4	0.461	535	2390	2470	2560	2650	2750	2850	2950	3060	3170	3280	3400
	BFL	0.615	408	2210	2280	2360	2440	2520	2600	2690	2770	2870	2960	3060
	6	2.54	318	2070	2130	2190	2260	2320	2390	2460	2540	2610	2690	2780
	7	4.78	229	1900	1950	2000	2050	2100	2150	2210	2270	2330	2390	2450

[a] Y1 = distance from top of the steel beam to plastic neutral axis
[b] Y2 = distance from top of the steel beam to concrete flange force
[c] See Figure 3-3c for PNA locations.
[d] Value in parentheses is I_x (in.^{4}) of noncomposite steel shape.

Table 3-20 (continued)

I_{LB} W21 Lower-Bound Elastic Moment of Inertia, I_{LB}, for Plastic Composite Sections

F_y = 50 ksi

Shape[d]	PNA[c]	Y1[a]	ΣQ_n	Y2[b], in.										
		in.	kip	2	2.5	3	3.5	4	4.5	5	5.5	6	6.5	7
W21×57	TFL	0	835	2490	2590	2700	2820	2940	3060	3190	3320	3460	3600	3740
(1170)	2	0.163	728	2400	2490	2600	2710	2820	2930	3050	3170	3300	3430	3570
	3	0.325	622	2290	2380	2480	2580	2680	2780	2890	3010	3120	3240	3370
	4	0.488	515	2170	2250	2340	2430	2520	2610	2710	2810	2910	3020	3130
	BFL	0.650	409	2030	2110	2180	2250	2330	2410	2500	2580	2670	2770	2860
	6	2.93	309	1880	1940	2000	2060	2120	2190	2260	2330	2410	2480	2560
	7	5.40	209	1700	1740	1780	1830	1880	1930	1980	2030	2090	2140	2200
W21×55	TFL	0	810	2390	2490	2590	2710	2820	2940	3060	3190	3320	3450	3590
(1140)	2	0.131	703	2300	2390	2490	2590	2700	2810	2930	3040	3160	3290	3420
	3	0.261	595	2190	2280	2370	2470	2560	2660	2770	2870	2990	3100	3220
	4	0.392	488	2080	2150	2230	2320	2400	2490	2580	2680	2780	2880	2980
	BFL	0.522	381	1940	2000	2070	2140	2210	2290	2370	2450	2530	2620	2710
	6	2.62	292	1800	1850	1910	1970	2030	2090	2160	2230	2290	2370	2440
	7	5.00	203	1640	1680	1720	1770	1810	1860	1910	1960	2010	2070	2120
W21×50	TFL	0	735	2110	2210	2300	2400	2510	2620	2730	2840	2960	3080	3210
(984)	2	0.134	648	2040	2130	2220	2310	2410	2510	2620	2730	2840	2950	3070
	3	0.268	560	1960	2040	2130	2210	2300	2400	2490	2590	2690	2800	2910
	4	0.401	473	1870	1940	2020	2100	2180	2260	2350	2440	2530	2630	2730
	BFL	0.535	386	1760	1830	1890	1960	2030	2110	2180	2260	2350	2430	2520
	6	2.91	285	1620	1670	1720	1780	1840	1900	1960	2020	2090	2160	2230
	7	5.56	184	1440	1470	1510	1550	1590	1640	1680	1730	1780	1820	1880
W21×48	TFL	0	705	2030	2110	2210	2300	2400	2500	2610	2720	2830	2950	3070
(959)	2	0.108	617	1950	2040	2120	2210	2300	2400	2500	2600	2710	2820	2930
	3	0.215	530	1870	1950	2030	2110	2200	2280	2380	2470	2570	2670	2770
	4	0.323	442	1780	1850	1920	1990	2070	2150	2230	2320	2400	2490	2590
	BFL	0.430	355	1670	1730	1790	1860	1920	1990	2060	2140	2210	2290	2370
	6	2.71	266	1540	1590	1640	1690	1750	1810	1860	1920	1990	2050	2120
	7	5.26	176	1390	1420	1460	1500	1540	1580	1620	1660	1710	1750	1800
W21×44	TFL	0	650	1830	1920	2000	2090	2180	2280	2370	2480	2580	2690	2800
(843)	2	0.113	577	1780	1850	1930	2020	2100	2190	2280	2380	2480	2580	2680
	3	0.225	504	1710	1780	1850	1930	2010	2100	2180	2270	2360	2460	2550
	4	0.338	431	1630	1700	1770	1840	1910	1990	2060	2150	2230	2310	2400
	BFL	0.450	358	1550	1610	1670	1730	1790	1860	1930	2000	2080	2150	2230
	6	2.92	260	1410	1460	1500	1560	1610	1660	1720	1780	1840	1900	1960
	7	5.71	163	1240	1270	1310	1340	1380	1420	1460	1500	1540	1580	1630

[a] Y1 = distance from top of the steel beam to plastic neutral axis
[b] Y2 = distance from top of the steel beam to concrete flange force
[c] See Figure 3-3c for PNA locations.
[d] Value in parentheses is I_x (in.^{4}) of noncomposite steel shape.

Table 3-20 (continued)

Lower-Bound Elastic Moment of Inertia, I_{LB}, for Plastic Composite Sections

F_y = 50 ksi

I_{LB}

W18

Shape[d]	PNA[c]	Y1[a]	ΣQ_n	Y2[b], in.										
		in.	kip	2	2.5	3	3.5	4	4.5	5	5.5	6	6.5	7
W18×60	TFL	0	880	2070	2170	2270	2380	2490	2610	2730	2860	2990	3130	3270
(984)	2	0.174	749	1980	2070	2170	2270	2370	2480	2590	2710	2830	2950	3080
	3	0.348	617	1880	1960	2050	2140	2230	2330	2430	2530	2640	2750	2860
	4	0.521	486	1760	1830	1900	1980	2060	2140	2230	2320	2410	2510	2610
	BFL	0.695	355	1610	1660	1720	1790	1850	1920	1990	2060	2140	2220	2300
	6	2.18	287	1520	1570	1620	1670	1730	1780	1840	1910	1970	2040	2110
	7	3.80	220	1420	1460	1500	1540	1590	1640	1680	1730	1790	1840	1900
W18×55	TFL	0	810	1880	1970	2070	2170	2270	2380	2490	2600	2720	2850	2980
(890)	2	0.158	691	1800	1880	1970	2060	2160	2260	2360	2470	2580	2690	2810
	3	0.315	573	1710	1790	1860	1950	2030	2120	2210	2310	2410	2510	2620
	4	0.473	454	1600	1670	1730	1810	1880	1960	2040	2120	2210	2300	2390
	BFL	0.630	336	1470	1520	1580	1640	1700	1760	1830	1900	1970	2040	2110
	6	2.15	269	1380	1430	1480	1530	1580	1630	1690	1750	1800	1870	1930
	7	3.86	203	1290	1320	1360	1400	1440	1490	1530	1580	1630	1670	1730
W18×50	TFL	0	735	1690	1770	1860	1950	2040	2140	2240	2350	2450	2570	2680
(800)	2	0.143	628	1620	1700	1780	1860	1940	2030	2130	2220	2320	2430	2530
	3	0.285	521	1540	1610	1680	1750	1830	1910	2000	2080	2170	2260	2360
	4	0.428	414	1440	1500	1560	1630	1700	1770	1840	1910	1990	2070	2160
	BFL	0.570	308	1330	1370	1430	1480	1530	1590	1650	1710	1780	1840	1910
	6	2.08	246	1250	1290	1330	1380	1420	1470	1520	1580	1630	1690	1740
	7	3.82	184	1160	1190	1220	1260	1300	1340	1380	1420	1460	1510	1550
W18×46	TFL	0	675	1540	1610	1690	1780	1860	1950	2040	2140	2240	2340	2450
(712)	2	0.151	583	1480	1550	1620	1700	1780	1860	1950	2040	2130	2220	2320
	3	0.303	492	1410	1470	1540	1610	1680	1760	1840	1920	2000	2090	2180
	4	0.454	400	1330	1380	1440	1500	1570	1630	1700	1780	1850	1930	2010
	BFL	0.605	308	1230	1280	1330	1380	1430	1490	1550	1610	1670	1730	1800
	6	2.42	239	1140	1180	1220	1270	1310	1360	1410	1460	1510	1570	1620
	7	4.36	169	1040	1070	1100	1140	1170	1210	1250	1280	1320	1370	1410
W18×40	TFL	0	590	1320	1390	1450	1530	1600	1680	1760	1840	1930	2020	2110
(612)	2	0.131	511	1270	1330	1390	1460	1530	1600	1680	1760	1840	1920	2010
	3	0.263	432	1210	1270	1320	1390	1450	1510	1580	1650	1730	1800	1880
	4	0.394	353	1140	1190	1240	1300	1350	1410	1470	1530	1600	1670	1740
	BFL	0.525	274	1060	1100	1150	1190	1240	1290	1340	1390	1450	1510	1560
	6	2.26	211	985	1020	1060	1090	1130	1170	1220	1260	1310	1350	1400
	7	4.27	148	896	922	950	979	1010	1040	1070	1110	1140	1180	1210

[a] Y1 = distance from top of the steel beam to plastic neutral axis
[b] Y2 = distance from top of the steel beam to concrete flange force
[c] See Figure 3-3c for PNA locations.
[d] Value in parentheses is I_x (in.^{4}) of noncomposite steel shape.

Table 3-20 (continued)

I_{LB} Lower-Bound Elastic Moment of Inertia, I_{LB}, for Plastic Composite Sections

W18-W16 F_y = 50 ksi

Shape[d]	PNA[c]	Y1[a]	ΣQ_n	Y2[b], in.										
		in.	kip	2	2.5	3	3.5	4	4.5	5	5.5	6	6.5	7
W18×35	TFL	0	515	1120	1170	1230	1300	1360	1430	1500	1570	1650	1720	1800
(510)	2	0.106	451	1080	1130	1190	1240	1300	1370	1430	1500	1570	1640	1720
	3	0.213	388	1030	1080	1130	1190	1240	1300	1360	1420	1490	1550	1620
	4	0.319	324	978	1020	1070	1120	1170	1220	1270	1330	1390	1450	1510
	BFL	0.425	260	917	955	995	1040	1080	1130	1170	1220	1270	1320	1380
	6	2.37	194	842	873	906	940	975	1010	1050	1090	1130	1170	1220
	7	4.56	129	753	776	800	825	851	878	906	935	965	996	1030
W16×45	TFL	0	665	1260	1330	1400	1470	1550	1630	1720	1810	1900	1990	2090
(586)	2	0.141	566	1200	1270	1330	1400	1470	1550	1630	1710	1790	1880	1970
	3	0.283	466	1140	1200	1260	1320	1380	1450	1520	1590	1670	1750	1830
	4	0.424	367	1060	1110	1160	1220	1270	1330	1390	1450	1520	1590	1660
	BFL	0.565	267	971	1010	1050	1090	1140	1190	1230	1290	1340	1390	1450
	6	1.77	217	917	950	986	1020	1060	1100	1140	1190	1230	1280	1330
	7	3.23	166	854	882	910	940	972	1000	1040	1070	1110	1150	1190
W16×40	TFL	0	590	1110	1170	1230	1300	1370	1440	1520	1590	1670	1760	1850
(518)	2	0.126	502	1060	1120	1170	1240	1300	1370	1430	1510	1580	1660	1740
	3	0.253	413	1000	1050	1110	1160	1220	1280	1340	1400	1470	1540	1610
	4	0.379	325	937	980	1030	1070	1120	1170	1230	1280	1340	1400	1460
	BFL	0.505	237	856	891	927	965	1000	1050	1090	1130	1180	1230	1280
	6	1.70	192	808	837	869	901	935	971	1010	1050	1090	1130	1170
	7	3.16	148	755	779	804	831	859	888	918	949	982	1020	1050
W16×36	TFL	0	530	973	1030	1080	1140	1200	1270	1340	1410	1480	1550	1630
(448)	2	0.108	455	933	983	1040	1090	1150	1210	1270	1330	1400	1470	1540
	3	0.215	380	886	931	979	1030	1080	1130	1190	1250	1310	1370	1440
	4	0.323	305	831	871	912	956	1000	1050	1100	1150	1200	1260	1310
	BFL	0.430	229	765	797	831	867	905	944	984	1030	1070	1120	1160
	6	1.82	181	715	743	772	802	833	866	901	936	973	1010	1050
	7	3.46	133	659	680	703	727	752	778	805	833	862	892	923
W16×31	TFL	0	457	827	874	923	974	1030	1080	1140	1200	1260	1330	1400
(375)	2	0.110	396	795	838	884	931	981	1030	1090	1140	1200	1260	1320
	3	0.220	335	758	797	838	882	927	974	1020	1070	1130	1180	1240
	4	0.330	274	714	749	786	824	864	906	949	995	1040	1090	1140
	BFL	0.440	213	663	692	723	756	790	825	862	900	940	982	1020
	6	2.00	164	614	639	664	691	720	749	780	812	845	879	914
	7	3.80	114	556	574	594	614	636	658	681	705	730	756	783

[a] Y1 = distance from top of the steel beam to plastic neutral axis
[b] Y2 = distance from top of the steel beam to concrete flange force
[c] See Figure 3-3c for PNA locations.
[d] Value in parentheses is I_x (in.^{4}) of noncomposite steel shape.

Table 3-20 (continued)

Lower-Bound Elastic Moment of Inertia, I_{LB}, for Plastic Composite Sections

F_y = 50 ksi

I_{LB}

W16-W14

Shape[d]	PNA[c]	Y1[a]	ΣQ_n	Y2[b], in.										
		in.	kip	2	2.5	3	3.5	4	4.5	5	5.5	6	6.5	7
W16×26	TFL	0	384	674	712	753	796	840	887	935	985	1040	1090	1150
(301)	2	0.0863	337	649	686	724	763	805	849	894	941	990	1040	1090
	3	0.173	289	621	654	689	726	764	804	846	889	934	980	1030
	4	0.259	242	589	619	651	683	718	754	791	830	871	912	956
	BFL	0.345	194	551	577	604	633	663	694	727	760	795	832	869
	6	2.05	145	505	527	549	572	597	622	649	676	705	734	765
	7	4.01	96.0	450	466	482	499	517	535	555	575	596	617	640
W14×38	TFL	0	560	844	896	951	1010	1070	1130	1200	1270	1340	1410	1490
(385)	2	0.129	473	805	853	903	956	1010	1070	1130	1190	1260	1330	1400
	3	0.258	386	759	802	847	894	943	995	1050	1100	1160	1220	1290
	4	0.386	299	704	741	779	819	861	905	951	999	1050	1100	1150
	BFL	0.515	211	636	665	695	726	759	794	830	868	907	948	990
	6	1.38	176	604	629	656	683	712	742	774	807	841	877	914
	7	2.53	140	568	589	611	634	659	684	710	738	766	796	827
W14×34	TFL	0	500	745	791	840	891	945	1000	1060	1120	1190	1250	1320
(340)	2	0.114	423	711	754	798	845	895	946	1000	1060	1110	1180	1240
	3	0.228	346	671	709	749	791	835	881	929	979	1030	1090	1140
	4	0.341	270	624	656	691	727	764	804	845	888	933	979	1030
	BFL	0.455	193	566	591	618	647	677	708	741	775	811	848	886
	6	1.42	159	535	558	581	606	632	659	687	717	748	780	813
	7	2.61	125	502	521	540	561	582	605	628	653	678	705	732
W14×30	TFL	0	443	642	682	725	770	817	866	918	972	1030	1090	1150
(291)	2	0.0963	378	614	651	691	732	775	821	868	918	969	1020	1080
	3	0.193	313	581	615	650	688	727	767	810	855	901	949	999
	4	0.289	248	543	572	603	635	669	704	741	780	820	862	905
	BFL	0.385	183	496	520	545	571	599	627	658	689	722	756	791
	6	1.46	147	466	486	507	530	553	578	604	630	658	687	717
	7	2.80	111	432	448	465	483	502	522	542	564	586	610	634
W14×26	TFL	0	385	553	589	626	665	706	749	794	841	890	941	994
(245)	2	0.105	332	530	563	598	634	672	712	754	797	843	890	938
	3	0.210	279	504	534	565	598	633	669	707	746	787	830	874
	4	0.315	226	473	499	527	556	586	618	652	686	722	760	799
	BFL	0.420	173	436	458	481	506	531	558	586	615	645	677	709
	6	1.67	135	405	423	443	463	485	507	530	555	580	607	634
	7	3.18	96.1	368	382	397	413	429	447	465	483	503	523	544

[a] Y1 = distance from top of the steel beam to plastic neutral axis
[b] Y2 = distance from top of the steel beam to concrete flange force
[c] See Figure 3-3c for PNA locations.
[d] Value in parentheses is I_x (in.^{4}) of noncomposite steel shape.

Table 3-20 (continued)

I_{LB} W14-W12 Lower-Bound Elastic Moment of Inertia, I_{LB}, for Plastic Composite Sections

F_y = 50 ksi

Shape[d]	PNA[c]	Y1[a]	ΣQ_n	Y2[b], in.										
		in.	kip	2	2.5	3	3.5	4	4.5	5	5.5	6	6.5	7
W14×22	TFL	0	325	453	483	514	547	581	617	655	694	735	778	822
(199)	2	0.0838	283	436	463	492	523	555	588	624	660	698	738	779
	3	0.168	241	416	441	467	495	525	555	587	621	656	692	730
	4	0.251	199	392	415	438	463	489	517	545	575	606	639	672
	BFL	0.335	157	365	384	404	426	448	472	496	522	548	576	605
	6	1.67	119	335	351	368	386	404	423	444	465	487	509	533
	7	3.32	81.1	301	312	325	338	352	366	381	397	413	430	448
W12×30	TFL	0	440	530	567	606	648	691	737	785	835	887	942	998
(238)	2	0.110	368	504	538	573	611	651	692	736	782	829	879	931
	3	0.220	296	473	503	534	567	602	639	678	718	760	804	850
	4	0.330	224	435	460	486	514	544	575	607	641	676	713	751
	BFL	0.440	153	389	408	428	449	472	495	520	546	573	601	631
	6	1.10	131	372	389	407	426	446	467	489	512	536	561	587
	7	1.92	110	355	370	385	402	419	438	457	477	498	520	542
W12×26	TFL	0	383	455	487	521	557	594	634	676	719	764	812	861
(204)	2	0.0950	321	433	462	493	526	560	596	634	674	715	758	803
	3	0.190	259	407	432	460	489	519	551	585	620	656	694	734
	4	0.285	198	375	397	420	444	470	497	525	555	586	618	652
	BFL	0.380	136	336	352	370	389	409	429	451	474	498	523	548
	6	1.07	116	321	336	351	368	386	404	423	444	465	487	509
	7	1.94	95.6	304	317	331	345	360	376	392	410	428	447	467
W12×22	TFL	0	324	371	398	427	458	490	523	559	596	634	674	716
(156)	2	0.106	281	356	381	408	436	466	497	530	564	600	638	676
	3	0.213	238	338	361	386	412	439	467	497	528	561	595	631
	4	0.319	196	318	339	360	383	408	433	460	487	517	547	578
	BFL	0.425	153	294	312	330	350	370	392	414	438	463	489	515
	6	1.66	117	270	285	300	316	333	351	370	389	410	431	453
	7	3.03	81.0	242	253	265	277	290	303	317	332	347	363	380
W12×19	TFL	0	279	313	336	361	387	414	443	473	505	538	573	608
(130)	2	0.0875	243	300	322	345	369	395	422	450	479	510	542	575
	3	0.175	208	286	306	327	349	373	398	423	450	479	508	539
	4	0.263	173	270	288	307	327	348	370	393	417	442	469	496
	BFL	0.350	138	251	266	283	300	318	337	357	378	400	423	447
	6	1.68	104	229	242	255	270	284	300	317	334	352	370	390
	7	3.14	69.6	203	212	222	233	244	255	267	280	293	307	321

[a] $Y1$ = distance from top of the steel beam to plastic neutral axis
[b] $Y2$ = distance from top of the steel beam to concrete flange force
[c] See Figure 3-3c for PNA locations.
[d] Value in parentheses is I_x (in.^{4}) of noncomposite steel shape.

Table 3-20 (continued)

Lower-Bound Elastic Moment of Inertia, I_{LB}, for Plastic Composite Sections

F_y = 50 ksi

I_{LB}

W12-W10

Shape[d]	PNA[c]	Y1[a]	ΣQ_n	Y2[b], in.										
		in.	kip	2	2.5	3	3.5	4	4.5	5	5.5	6	6.5	7
W12×16	TFL	0	236	254	273	294	316	339	363	388	415	442	471	501
(103)	2	0.0663	209	245	263	282	303	324	347	371	396	422	449	477
	3	0.133	183	235	252	270	289	309	330	352	375	400	425	451
	4	0.199	156	223	239	255	272	291	310	330	351	373	396	420
	BFL	0.265	130	210	224	239	254	271	288	306	325	344	365	386
	6	1.71	94.3	189	200	212	225	238	251	266	281	297	313	331
	7	3.32	58.9	163	171	179	188	197	207	217	228	239	250	262
W12×14	TFL	0	208	220	237	255	274	295	316	338	361	386	411	437
(88.6)	2	0.0563	186	213	229	246	264	283	303	324	346	369	393	418
	3	0.113	163	204	219	235	252	270	288	308	328	350	372	395
	4	0.169	141	195	209	223	239	255	272	290	309	329	349	370
	BFL	0.225	119	184	197	210	224	238	254	270	287	305	323	342
	6	1.68	85.3	165	175	186	197	208	221	234	247	261	276	291
	7	3.35	52.0	141	148	155	163	171	179	188	198	207	218	228
W10×26	TFL	0	381	339	367	397	429	463	499	536	576	617	661	706
(144)	2	0.110	317	321	346	374	403	434	466	500	536	574	613	655
	3	0.220	254	300	322	346	372	399	428	458	490	523	557	594
	4	0.330	190	274	292	312	334	356	380	405	431	459	488	518
	BFL	0.440	127	241	255	270	286	303	321	340	360	381	402	425
	6	0.886	111	232	245	258	273	288	304	321	339	358	377	398
	7	1.49	95.1	222	233	245	258	271	286	301	317	333	351	369
W10×22	TFL	0	325	282	306	331	358	387	417	449	483	518	555	593
(118)	2	0.0900	273	267	289	313	337	364	391	420	451	483	517	552
	3	0.180	221	251	270	291	312	336	360	386	413	442	472	503
	4	0.270	169	230	246	264	282	302	323	345	368	392	417	443
	BFL	0.360	118	205	218	232	246	261	277	295	312	331	351	371
	6	0.962	99.3	195	206	218	230	244	258	273	289	305	323	341
	7	1.72	81.1	183	193	203	214	225	238	250	264	278	293	308
W10×19	TFL	0	281	238	259	281	304	329	355	383	412	443	474	508
(96.3)	2	0.0988	241	227	246	267	288	311	335	361	388	416	445	476
	3	0.198	202	215	232	251	270	291	313	336	360	386	413	440
	4	0.296	162	200	215	231	248	266	286	306	327	350	373	397
	BFL	0.395	122	182	195	208	222	237	253	270	287	306	325	345
	6	1.25	96.2	169	179	190	202	215	228	243	257	273	289	306
	7	2.29	70.3	153	161	170	179	189	200	211	223	235	248	261

[a] Y1 = distance from top of the steel beam to plastic neutral axis
[b] Y2 = distance from top of the steel beam to concrete flange force
[c] See Figure 3-3c for PNA locations.
[d] Value in parentheses is I_x (in.^{4}) of noncomposite steel shape.

Table 3-20 (continued)

I_{LB} W10 Lower-Bound Elastic Moment of Inertia, I_{LB}, for Plastic Composite Sections

F_y = 50 ksi

Shape[d]	PNA[c]	Y1[a]	ΣQ_n	Y2[b], in.										
		in.	kip	2	2.5	3	3.5	4	4.5	5	5.5	6	6.5	7
W10×17	TFL	0	250	206	224	244	264	286	310	334	360	387	415	445
(81.9)	2	0.0825	216	197	214	232	251	272	293	316	340	365	391	418
	3	0.165	183	187	202	219	236	255	274	295	317	340	364	388
	4	0.248	150	175	189	203	219	235	253	271	290	311	332	354
	BFL	0.330	117	161	173	185	198	212	227	243	259	276	294	313
	6	1.31	89.8	148	157	167	178	190	202	215	229	243	258	274
	7	2.45	62.4	132	139	147	155	164	173	183	193	204	215	227
W10×15	TFL	0	221	177	193	210	228	248	268	289	312	336	361	387
(68.9)	2	0.0675	194	170	185	201	218	236	255	275	296	318	342	366
	3	0.135	167	162	176	190	206	223	240	259	278	299	320	342
	4	0.203	140	153	165	178	192	207	223	240	258	276	295	315
	BFL	0.270	113	142	153	164	177	190	204	218	233	250	266	284
	6	1.35	83.8	128	137	147	157	167	178	190	203	216	229	244
	7	2.60	55.1	112	118	125	133	140	148	157	166	175	185	196
W10×12	TFL	0	177	139	152	165	180	195	211	229	247	265	285	306
(53.8)	2	0.0525	156	134	145	158	172	186	201	217	234	252	271	290
	3	0.105	135	127	138	150	163	176	190	205	221	237	254	272
	4	0.158	115	121	131	142	153	165	178	191	206	221	236	252
	BFL	0.210	93.8	113	122	131	141	152	163	175	187	200	214	228
	6	1.30	69.0	102	109	116	124	133	142	152	162	173	184	195
	7	2.61	44.3	87.9	93.0	98.4	104	110	117	124	131	139	146	155

[a] Y1 = distance from top of the steel beam to plastic neutral axis
[b] Y2 = distance from top of the steel beam to concrete flange force
[c] See Figure 3-3c for PNA locations.
[d] Value in parentheses is I_x (in.^{4}) of noncomposite steel shape.

Table 3-21

Shear Stud Anchor

F_u = 65 ksi

Q_n

Nominal Horizontal Shear Strength for One Steel Headed Stud Anchor, Q_n, kips

Deck condition			Stud anchor diameter, in.	Normal weight concrete w_c = 145 pcf		Lightweight concrete w_c = 110 pcf	
				f'_c = 3 ksi	f'_c = 4 ksi	f'_c = 3 ksi	f'_c = 4 ksi
No deck			3/8	5.26	5.38	4.28	5.31
			1/2	9.35	9.57	7.60	9.43
			5/8	14.6	15.0	11.9	14.7
			3/4	21.0	21.5	17.1	21.2
Deck Parallel	$\frac{w_r}{h_r} \geq 1.5$		3/8	5.26	5.38	4.28	5.31
			1/2	9.35	9.57	7.60	9.43
			5/8	14.6	15.0	11.9	14.7
			3/4	21.0	21.5	17.1	21.2
	$\frac{w_r}{h_r} < 1.5$		3/8	4.58	4.58	4.28	4.58
			1/2	8.14	8.14	7.60	8.14
			5/8	12.7	12.7	11.9	12.7
			3/4	18.3	18.3	17.1	18.3
Deck Perpendicular	Weak studs per rib (R_p = 0.60)	1	3/8	4.31	4.31	4.28	4.31
			1/2	7.66	7.66	7.60	7.66
			5/8	12.0	12.0	11.9	12.0
			3/4	17.2	17.2	17.1	17.2
		2	3/8	3.66	3.66	3.66	3.66
			1/2	6.51	6.51	6.51	6.51
			5/8	10.2	10.2	10.2	10.2
			3/4	14.6	14.6	14.6	14.6
		3	3/8	3.02	3.02	3.02	3.02
			1/2	5.36	5.36	5.36	5.36
			5/8	8.38	8.38	8.38	8.38
			3/4	12.1	12.1	12.1	12.1
	Strong studs per rib (R_p = 0.75)	1	3/8	5.26	5.38	4.28	5.31
			1/2	9.35	9.57	7.60	9.43
			5/8	14.6	15.0	11.9	14.7
			3/4	21.0	21.5	17.1	21.2
		2	3/8	4.58	4.58	4.28	4.58
			1/2	8.14	8.14	7.60	8.14
			5/8	12.7	12.7	11.9	12.7
			3/4	18.3	18.3	17.1	18.3
		3	3/8	3.77	3.77	3.77	3.77
			1/2	6.70	6.70	6.70	6.70
			5/8	10.5	10.5	10.5	10.5
			3/4	15.1	15.1	15.1	15.1

Note:
Tabulated values are applicable only to concrete made with ASTM C33 aggregates for normal weight concrete and ASTM C330 aggregates for lightweight concrete.
After-weld steel headed stud anchor lengths assumed to be ≥ Deck height + 1.5 in.

Table 3-22a
Concentrated Load Equivalents

n	Loading	Coeff.	Simple Beam	Beam Fixed One End, Supported at Other	Beam Fixed Both Ends
				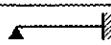	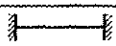
∞	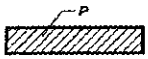	a	0.125	0.070	0.042
		b	—	0.125	0.083
		c	0.500	0.375	—
		d	—	0.625	0.500
		e	0.013	0.005	0.003
		f	1.000	1.000	0.667
		g	1.000	0.415	0.300
2	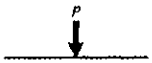	a	0.250	0.156	0.125
		b	—	0.188	0.125
		c	0.500	0.313	—
		d	—	0.688	0.500
		e	0.021	0.009	0.005
		f	2.000	1.500	1.000
		g	0.800	0.477	0.400
3		a	0.333	0.222	0.111
		b	—	0.333	0.222
		c	1.000	0.667	—
		d	—	1.333	1.000
		e	0.036	0.015	0.008
		f	2.667	2.667	1.778
		g	1.022	0.438	0.333
4		a	0.500	0.266	0.188
		b	—	0.469	0.313
		c	1.500	1.031	—
		d	—	1.969	1.500
		e	0.050	0.021	0.010
		f	4.000	3.750	2.500
		g	0.950	0.428	0.320
5	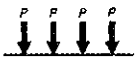	a	0.600	0.360	0.200
		b	—	0.600	0.400
		c	2.000	1.400	—
		d	—	2.600	2.000
		e	0.063	0.027	0.013
		f	4.800	4.800	3.200
		g	1.008	0.424	0.312

Maximum positive moment (kip-ft): aPL
Maximum negative moment (kip-ft): bPL
Pinned end reaction (kips): cP
Fixed end reaction (kips): dP
Maximum deflection (in.): $eP l^3 / EI$

Equivalent simple span uniform load (kips): fP
Deflection coefficient for equivalent simple span uniform load: g
Number of equal load spaces: n
Span of beam (ft): L
Span of beam (in.): l

Table 3-22b
Cantilevered Beams
Beam Diagrams and Formulas—Equal Loads, Equally Spaced

No. Spans	System
2	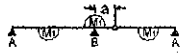
3	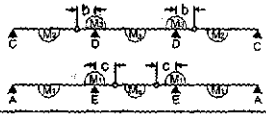
4	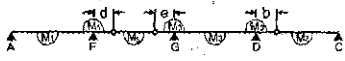
5	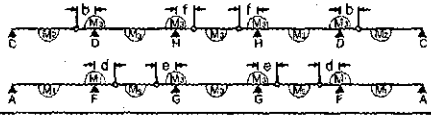
≥6 (even)	
≥7 (odd)	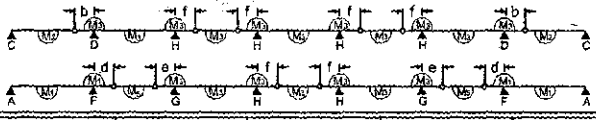

n		∞	2	3	4	5
Typical Span Loading		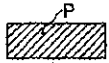				
Moments	M_1	0.086×PL	0.167×PL	0.250×PL	0.333×PL	0.429×PL
	M_2	0.096×PL	0.188×PL	0.278×PL	0.375×PL	0.480×PL
	M_3	0.063×PL	0.125×PL	0.167×PL	0.250×PL	0.300×PL
	M_4	0.039×PL	0.083×PL	0.083×PL	0.167×PL	0.171×PL
	M_5	0.051×PL	0.104×PL	0.139×PL	0.208×PL	0.249×PL
Reactions	A	0.414×P	0.833×P	1.250×P	1.667×P	2.071×P
	B	1.172×P	2.333×P	3.500×P	4.667×P	5.857×P
	C	0.438×P	0.875×P	1.333×P	1.750×P	2.200×P
	D	1.063×P	2.125×P	3.167×P	4.250×P	5.300×P
	E	1.086×P	2.167×P	3.250×P	4.333×P	5.429×P
	F	1.109×P	2.208×P	3.333×P	4.417×P	5.557×P
	G	0.977×P	1.958×P	2.917×P	3.917×P	4.871×P
	H	1.000×P	2.000×P	3.000×P	4.000×P	5.000×P
Cantilever Dimensions	a	0.172×L	0.250×L	0.200×L	0.182×L	0.176×L
	b	0.125×L	0.200×L	0.143×L	0.143×L	0.130×L
	c	0.220×L	0.333×L	0.250×L	0.222×L	0.229×L
	d	0.204×L	0.308×L	0.231×L	0.211×L	0.203×L
	e	0.157×L	0.273×L	0.182×L	0.176×L	0.160×L
	f	0.147×L	0.250×L	0.167×L	0.167×L	0.150×L

Table 3-22c
Continuous Beams
Moments and Shear Coefficients— Equal Spans, Equally Loaded

Moment — Uniform Load — Shear

in terms of wl^2 | in terms of wl

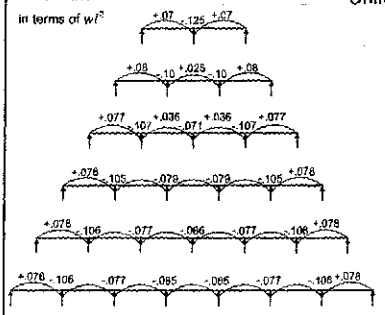

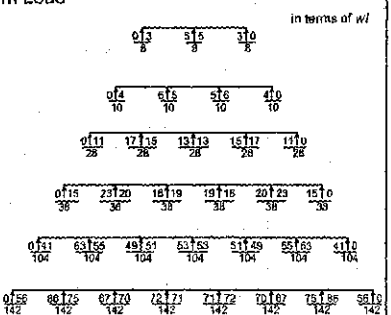

Moment — Concentrated Loads at center — Shear

in terms of Pl | in terms of P

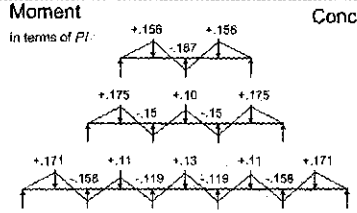

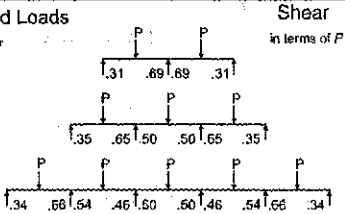

Moment — Concentrated Loads at third points — Shear

in terms of Pl | in terms of P

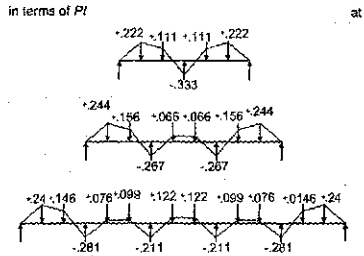

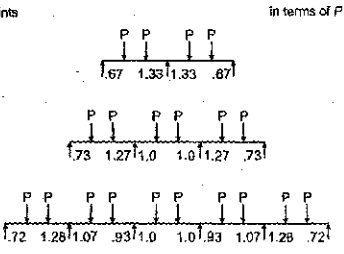

Moment — Concentrated Loads at quarter points — Shear

in terms of Pl | in terms of P

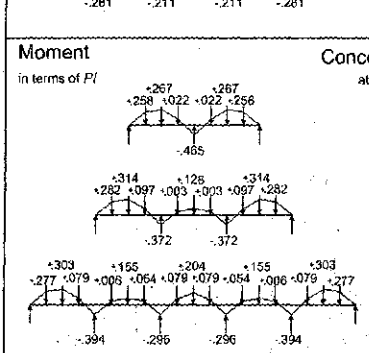

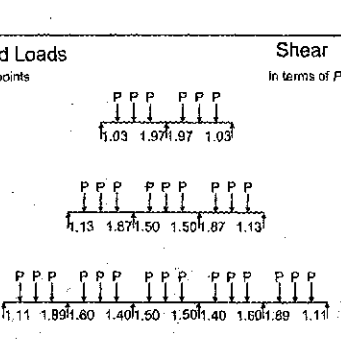

Table 3-23
Shears, Moments and Deflections

1. SIMPLE BEAM — UNIFORMLY DISTRIBUTED LOAD

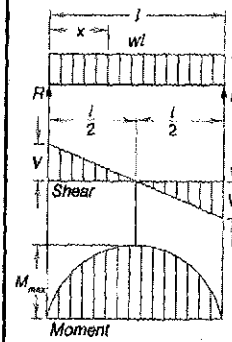

Total Equiv. Uniform Load ..... $= wl$

$R = V$ ..... $= \frac{wl}{2}$

V_x ..... $= w\left(\frac{l}{2} - x\right)$

M_{max} (at center) ..... $= \frac{wl^2}{8}$

M_x ..... $= \frac{wx}{2}(l - x)$

Δ_{max} (at center) ..... $= \frac{5wl^4}{384\,EI}$

Δ_x ..... $= \frac{wx}{24\,EI}\left(l^3 - 2lx^2 + x^3\right)$

2. SIMPLE BEAM — LOAD INCREASING UNIFORMLY TO ONE END

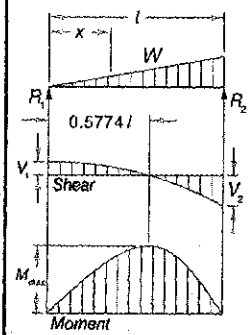

Total Equiv. Uniform Load ..... $= \frac{16\,W}{9\sqrt{3}} = 1.03\,W$

$R_1 = V_1$ ..... $= \frac{W}{3}$

$R_2 = V_2 = V_{max}$ ..... $= \frac{2W}{3}$

V_x ..... $= \frac{W}{3} - \frac{Wx^2}{l^2}$

M_{max} $\left(\text{at } x = \frac{l}{\sqrt{3}} = 0.557\,l\right)$ ..... $= \frac{2Wl}{9\sqrt{3}} = 0.128\,Wl$

M_x ..... $= \frac{Wx}{3l^2}\left(l^2 - x^2\right)$

Δ_{max} $\left(\text{at } x = l\sqrt{1 - \sqrt{\frac{8}{15}}} = 0.519\,l\right)$ ..... $= 0.0130\,\frac{Wl^3}{EI}$

Δ_x ..... $= \frac{Wx}{180\,EIl^2}\left(3x^4 - 10l^2x^2 + 7l^4\right)$

3. SIMPLE BEAM — LOAD INCREASING UNIFORMLY TO CENTER

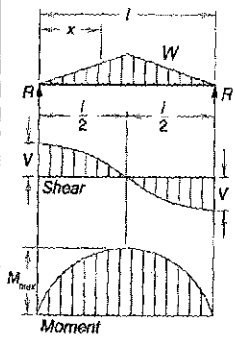

Total Equiv. Uniform Load ..... $= \frac{4\,W}{3}$

$R = V$ ..... $= \frac{W}{2}$

V_x (when $x < \frac{l}{2}$) ..... $= \frac{W}{2l^2}\left(l^2 - 4x^2\right)$

M_{max} (at center) ..... $= \frac{Wl}{6}$

M_x (when $x < \frac{l}{2}$) ..... $= Wx\left(\frac{1}{2} - \frac{2x^2}{3l^2}\right)$

Δ_{max} (at center) ..... $= \frac{Wl^3}{60\,EI}$

Δ_x (when $x < \frac{l}{2}$) ..... $= \frac{Wx}{480\,EIl^2}\left(5l^2 - 4x^2\right)^2$

Table 3-23 (continued)
Shears, Moments and Deflections

4. SIMPLE BEAM — UNIFORM LOAD PARTIALLY DISTRIBUTED

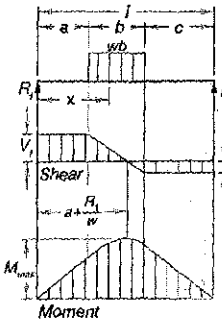

$R_1 = V_1$ (max. when $a < c$) ..... $= \frac{wb}{2l}(2c+b)$

$R_2 = V_2$ (max. when $a > c$) ..... $= \frac{wb}{2l}(2a+b)$

V_x (when $x > a$ and $< (a+b)$) .... $= R_1 - w(x-a)$

M_{max} $\left(\text{at } x = a+\frac{R_1}{w}\right)$ ..... $= R_1\left(a+\frac{R_1}{2w}\right)$

M_x (when $x < a$) ..... $= R_1 x$

M_x (when $x > a$ and $< (a+b)$) .... $= R_1 x - \frac{w}{2}(x-a)^2$

M_x (when $x > (a+b)$) ..... $= R_2(l-x)$

5. SIMPLE BEAM — UNIFORM LOAD PARTIALLY DISTRIBUTED AT ONE END

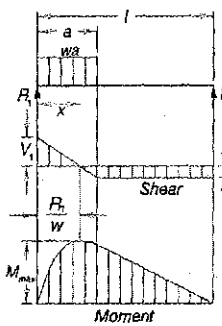

$R_1 = V_1 = V_{max}$ ..... $= \frac{wa}{2l}(2l-a)$

$R_2 = V_2$ ..... $= \frac{wa^2}{2l}$

V_x (when $x < a$) ..... $= R_1 - wx$

M_{max} $\left(\text{at } x = \frac{R_1}{w}\right)$ ..... $= \frac{R_1^2}{2w}$

M_x (when $x < a$) ..... $= R_1 x - \frac{wx^2}{2}$

M_x (when $x > a$) ..... $= R_2(l-x)$

Δ_x (when $x < a$) ..... $= \frac{wx}{24EIl}\left(a^2(2l-a)^2 - 2ax^2(2l-a) + lx^3\right)$

Δ_x (when $x > a$) ..... $= \frac{wa^2(l-x)}{24EIl}\left(4xl - 2x^2 - a^2\right)$

6. SIMPLE BEAM — UNIFORM LOAD PARTIALLY DISTRIBUTED AT EACH END

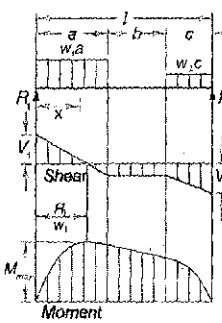

$R_1 = V_1$ ..... $= \frac{w_1 a(2l-a) + w_2 c^2}{2l}$

$R_2 = V_2$ ..... $= \frac{w_2 c(2l-c) + w_1 a^2}{2l}$

V_x (when $x < a$) ..... $= R_1 - w_1 x$

V_x (when $a < x < (a+b)$) ..... $= R_1 - w_1 a$

V_x (when $x > (a+b)$) ..... $= R_2 - w_2(l-x)$

M_{max} $\left(\text{at } x = \frac{R_1}{w_1}, \text{when } R_1 < w_1 a\right)$ .... $= \frac{R_1^2}{2w_1}$

M_{max} $\left(\text{at } x = l - \frac{R_2}{w_2}, \text{when } R_2 < w_2 c\right)$ $= \frac{R_2^2}{2w_2}$

M_x (when $x < a$) ..... $= R_1 x - \frac{w_1 x^2}{2}$

M_x (when $a < x < (a+b)$) ..... $= R_1 x - \frac{w_1 a}{2}(2x-a)$

M_x (when $x > (a+b)$) ..... $= R_2(l-x) - \frac{w_2(l-x)^2}{2}$

Table 3-23 (continued)
Shears, Moments and Deflections

7. SIMPLE BEAM — CONCENTRATED LOAD AT CENTER

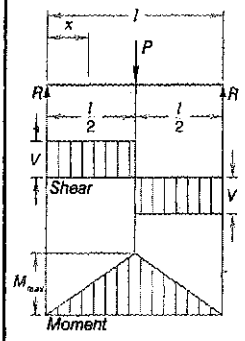

Total Equiv. Uniform Load ..... $= 2P$

$R = V$ ..... $= \frac{P}{2}$

M_{max} (at point of load) ..... $= \frac{Pl}{4}$

M_x (when $x < \frac{l}{2}$) ..... $= \frac{Px}{2}$

Δ_{max} (at point of load) ..... $= \frac{Pl^3}{48EI}$

Δ_x (when $x < \frac{l}{2}$) ..... $= \frac{Px}{48EI}\left(3l^2 - 4x^2\right)$

8. SIMPLE BEAM — CONCENTRATED LOAD AT ANY POINT

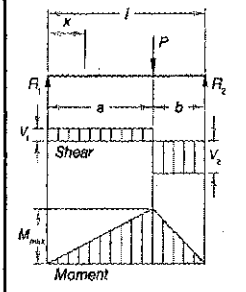

Total Equiv. Uniform Load ..... $= \frac{8Pab}{l^2}$

$R_1 = V_1$ ($= V_{max}$ when $a < b$) ..... $= \frac{Pb}{l}$

$R_2 = V_2$ ($= V_{max}$ when $a > b$) ..... $= \frac{Pa}{l}$

M_{max} (at point of load) ..... $= \frac{Pab}{l}$

M_x (when $x < a$) ..... $= \frac{Pbx}{l}$

Δ_{max} $\left(\text{at } x = \sqrt{\frac{a(a+2b)}{3}}, \text{when } a > b\right)$ ..... $= \frac{Pab(a+2b)\sqrt{3a(a+2b)}}{27EIl}$

Δ_a (at point of load) ..... $= \frac{Pa^2b^2}{3EIl}$

Δ_x (when $x < a$) ..... $= \frac{Pbx}{6EIl}\left(l^2 - b^2 - x^2\right)$

9. SIMPLE BEAM — TWO EQUAL CONCENTRATED LOADS SYMMETRICALLY PLACED

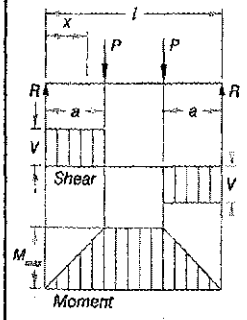

Total Equiv. Uniform Load ..... $= \frac{8Pa}{l}$

$R = V$ ..... $= P$

M_{max} (between loads) ..... $= Pa$

M_x (when $x < a$) ..... $= Px$

Δ_{max} (at center) ..... $= \frac{Pa}{24EI}\left(3l^2 - 4a^2\right)$

Δ_{max} (when $a = \frac{l}{3}$) ..... $= \frac{Pl^3}{28EI}$

Δ_x (when $x < a$) ..... $= \frac{Px}{6EI}\left(3la - 3a^2 - x^2\right)$

Δ_x (when $a < x < (l - a)$) ..... $= \frac{Pa}{6EI}\left(3lx - 3x^2 - a^2\right)$

Table 3-23 (continued)
Shears, Moments and Deflections

10. SIMPLE BEAM — TWO EQUAL CONCENTRATED LOADS UNSYMMETRICALLY PLACED

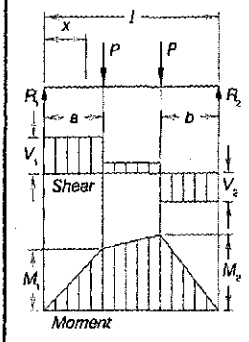

$R_1 = V_1$ ($= V_{max}$ when $a < b$) ..... $= \frac{P}{l}(l - a + b)$

$R_2 = V_2$ ($= V_{max}$ when $a > b$) ..... $= \frac{P}{l}(l - b + a)$

V_x (when $a < x < (l - b)$) ..... $= \frac{P}{l}(b - a)$

M_1 ($= M_{max}$ when $a > b$) ..... $= R_1 a$

M_2 ($= M_{max}$ when $a < b$) ..... $= R_2 b$

M_x (when $x < a$) ..... $= R_1 x$

M_x (when $a < x < (l - b)$) ..... $= R_1 x - P(x - a)$

11. SIMPLE BEAM — TWO UNEQUAL CONCENTRATED LOADS UNSYMMETRICALLY PLACED

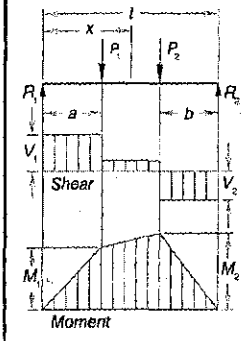

$R_1 = V_1$ ..... $= \frac{P_1(l - a) + P_2 b}{l}$

$R_2 = V_2$ ..... $= \frac{P_1 a + P_2(l - b)}{l}$

V_x (when $a < x < (l - b)$) ..... $= R_1 - P_1$

M_1 ($= M_{max}$ when $R_1 < P_1$) ..... $= R_1 a$

M_2 ($= M_{max}$ when $R_2 < P_2$) ..... $= R_2 b$

M_x (when $x < a$) ..... $= R_1 x$

M_x (when $a < x < (l - b)$) ..... $= R_1 x - P_1(x - a)$

12. BEAM FIXED AT ONE END, SUPPORTED AT OTHER — UNIFORMLY DISTRUBTED LOAD

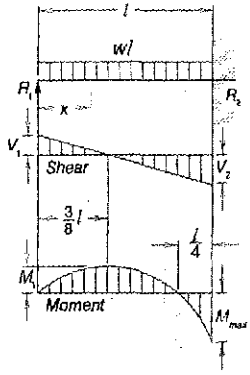

Total Equiv. Uniform Load ..... $= wl$

$R_1 = V_1$ ..... $= \frac{3wl}{8}$

$R_2 = V_2 = V_{max}$ ..... $= \frac{5wl}{8}$

V_x ..... $= R_1 - wx$

M_{max} ..... $= \frac{wl^2}{8}$

M_1 (at $x = \frac{3}{8}l$) ..... $= \frac{9}{128}wl^2$

M_x ..... $= R_1 x - \frac{wx^2}{2}$

Δ_{max} (at $x = \frac{l}{16}\left(1 + \sqrt{33}\right) = 0.422\,l$) ..... $= \frac{wl^4}{185\,EI}$

Δ_x ..... $= \frac{wx}{48\,EI}\left(l^3 - 3lx^2 + 2x^3\right)$

Table 3-23 (continued)
Shears, Moments and Deflections

13. BEAM FIXED AT ONE END, SUPPORTED AT OTHER — CONCENTRATED LOAD AT CENTER

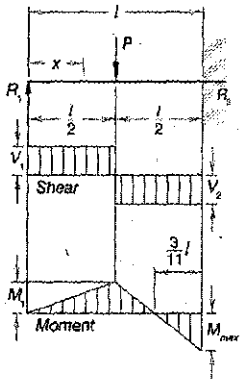

Total Equiv. Uniform Load ..... $= \frac{3P}{2}$

$R_1 = V_1$ ..... $= \frac{5P}{16}$

$R_2 = V_2 = V_{max}$ ..... $= \frac{11P}{16}$

M_{max} (at fixed end) ..... $= \frac{3Pl}{16}$

M_1 (at point of load) ..... $= \frac{5Pl}{32}$

M_x (at $x < \frac{l}{2}$) ..... $= \frac{5Px}{16}$

M_x (when $x > \frac{l}{2}$) ..... $= P\left(\frac{l}{2} - \frac{11x}{16}\right)$

Δ_{max} (at $x = \frac{l}{\sqrt{5}} = 0.447l$) ..... $= \frac{Pl^3}{48\,EI\sqrt{5}} = 0.00932\,\frac{Pl^3}{EI}$

Δ_1 (at point of load) ..... $= \frac{7Pl^3}{768\,EI}$

Δ_x (at $x < \frac{l}{2}$) ..... $= \frac{Px}{96\,EI}\left(3l^2 - 5x^2\right)$

Δ_x (at $x > \frac{l}{2}$) ..... $= \frac{P}{96\,EI}(x-l)^2(11x-2l)$

14. BEAM FIXED AT ONE END, SUPPORTED AT THE OTHER — CONCENTRATED LOAD AT ANY POINT

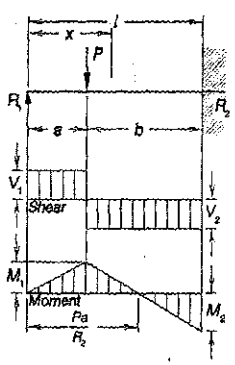

$R_1 = V_1$ ..... $= \frac{Pb^2}{2l^3}(a+2l)$

$R_2 = V_2$ ..... $= \frac{Pa}{2l^3}\left(3l^2 - a^2\right)$

M_1 (at point of load) ..... $= R_1 a$

M_2 (at fixed end) ..... $= \frac{Pab}{2l^2}(a+l)$

M_x (at $x < a$) ..... $= R_1 x$

M_x (when $x > a$) ..... $= R_1 x - P(x-a)$

Δ_{max} $\left(\text{when } a < 0.414l \text{ at } x = l\sqrt{\frac{\left(l^2 + a^2\right)}{\left(3l^2 - a^2\right)}}\right)$ ..... $= \frac{Pa\left(l^2 - a^2\right)^3}{3EI\left(3l^2 - a^2\right)^2}$

Δ_{max} $\left(\text{when } a > 0.414l \text{ at } x = l\sqrt{\frac{a}{2l+a}}\right)$ ..... $= \frac{Pab^2}{6\,EI}\sqrt{\frac{a}{2l+a}}$

Δ_a (at point of load) ..... $= \frac{Pa^2b^3}{12\,EIl^3}(3l+a)$

Δ_x (when $x < a$) ..... $= \frac{Pb^2x}{12\,EIl^3}\left(3al^2 - 2lx^2 - ax^2\right)$

Δ_x (when $x > a$) ..... $= \frac{Pa}{12\,EIl^3}(l-x)^2\left(3l^2x - a^2x - 2a^2l\right)$

Table 3-23 (continued)
Shears, Moments and Deflections

15. BEAM FIXED AT BOTH ENDS — UNIFORMLY DISTRIBUTED LOADS

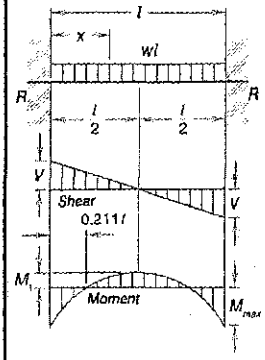

Total Equiv. Uniform Load ..... $= \frac{2wl}{3}$

$R = V$ ..... $= \frac{wl}{2}$

V_x ..... $= w\left(\frac{l}{2} - x\right)$

M_{max} (at ends) ..... $= \frac{wl^2}{12}$

M_1 (at center) ..... $= \frac{wl^2}{24}$

M_x ..... $= \frac{w}{12}\left(6lx - l^2 - 6x^2\right)$

Δ_{max} (at center) ..... $= \frac{wl^4}{384\,EI}$

Δ_x ..... $= \frac{wx^2}{24\,EI}(l - x)^2$

16. BEAM FIXED AT BOTH ENDS — CONCENTRATED LOAD AT CENTER

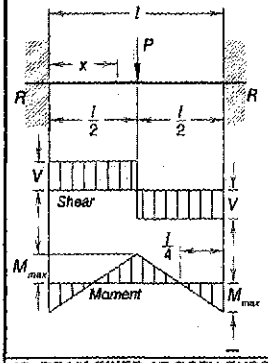

Total Equiv. Uniform Load ..... $= P$

$R = V$ ..... $= \frac{P}{2}$

M_{max} (at center and ends) ..... $= \frac{Pl}{8}$

M_x (when $x < \frac{l}{2}$) ..... $= \frac{P}{8}(4x - l)$

Δ_{max} (at center) ..... $= \frac{Pl^3}{192\,EI}$

Δ_x (when $x < \frac{l}{2}$) ..... $= \frac{Px^2}{48\,EI}(3l - 4x)$

17. BEAM FIXED AT BOTH ENDS — CONCENTRATED LOAD AT ANY POINT

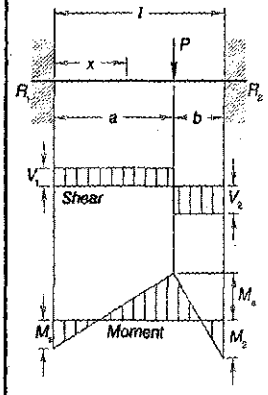

$R_1 = V_1$ ($= V_{max}$ when $a < b$) ..... $= \frac{Pb^2}{l^3}(3a + b)$

$R_2 = V_2$ ($= V_{max}$ when $a > b$) ..... $= \frac{Pa^2}{l^3}(a + 3b)$

M_1 ($= M_{max}$ when $a < b$) ..... $= \frac{Pab^2}{l^2}$

M_2 ($= M_{max}$ when $a > b$) ..... $= \frac{Pa^2b}{l^2}$

M_a (at point of load) ..... $= \frac{2Pa^2b^2}{l^3}$

M_x (when $x < a$) ..... $= R_1x - \frac{Pab^2}{l^2}$

Δ_{max} (when $a > b$ at $x = \frac{2al}{3a + b}$) ..... $= \frac{2Pa^3b^2}{3EI(3a + b)^2}$

Δ_a (at point of load) ..... $= \frac{Pa^3b^3}{3EIl^3}$

Δ_x (when $x < a$) ..... $= \frac{Pb^2x^2}{6EIl^3}(3al - 3ax - bx)$

Table 3-23 (continued)
Shears, Moments and Deflections

18. CANTILEVERED BEAM — LOAD INCREASING UNIFORMLY TO FIXED END

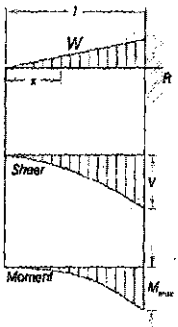

Total Equiv. Uniform Load ..... $= \frac{3}{8}W$

$R = V$ ..... $= W$

V_x ..... $= W\frac{x^2}{l^2}$

M_{max} (at fixed end) ..... $= \frac{Wl}{3}$

M_x ..... $= \frac{Wx^3}{3l^2}$

Δ_{max} (at free end) ..... $= \frac{Wl^3}{15\,EI}$

Δ_x ..... $= \frac{W}{60\,EIl^2}\left(x^5 - 5l^4x + 4l^5\right)$

19. CANTILEVERED BEAM — UNIFORMLY DISTRIBUTED LOAD

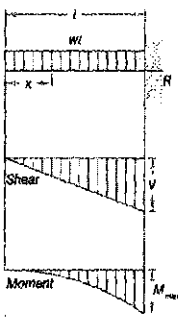

Total Equiv. Uniform Load ..... $= 4wl$

$R = V$ ..... $= wl$

V_x ..... $= wx$

M_{max} (at fixed end) ..... $= \frac{wl^2}{2}$

M_x ..... $= \frac{wx^2}{2}$

Δ_{max} (at free end) ..... $= \frac{wl^4}{8\,EI}$

Δ_x ..... $= \frac{w}{24\,EI}\left(x^4 - 4l^3x + 3l^4\right)$

20. BEAM FIXED AT ONE END, FREE TO DEFLECT VERTICALLY BUT NOT ROTATE AT OTHER — UNIFORMLY DISTRIBUTED LOAD

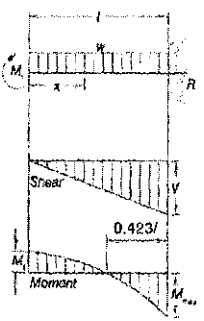

Total Equiv. Uniform Load ..... $= \frac{5}{8}wl$

$R = V$ ..... $= wl$

V_x ..... $= wx$

M_x (at deflected end) ..... $= \frac{wl^2}{6}$

M_{max} (at fixed end) ..... $= \frac{wl^2}{3}$

M_x ..... $= \frac{w}{6}\left(l^2 - 3x^2\right)$

Δ_{max} (at deflected end) ..... $= \frac{wl^4}{24\,EI}$

Δ_x ..... $= \frac{w\left(l^2 - x^2\right)^2}{24\,EI}$

Table 3-23 (continued)
Shears, Moments and Deflections

21. CANTILEVERED BEAM — CONCENTRATED LOAD AT ANY POINT

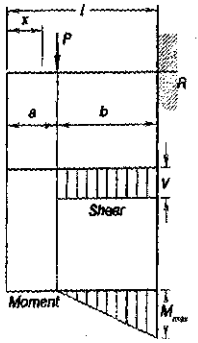

Total Equiv. Uniform Load ..... $= \frac{8Pb}{l}$

$R = V$ ..... $= P$

M_{max} (at fixed end) ..... $= Pb$

M_x (when $x > a$) ..... $= P(x-a)$

Δ_{max} (at free end) ..... $= \frac{Pb^2}{6EI}(3l-b)$

Δ_a (at point of load) ..... $= \frac{Pb^3}{3EI}$

Δ_x (when $x < a$) ..... $= \frac{Pb^2}{6EI}(3l-3x-b)$

Δ_x (when $x > a$) ..... $= \frac{P(l-x)^2}{6EI}(3b-l+x)$

22. CANTILEVERED BEAM — CONCENTRATED LOAD AT FREE END

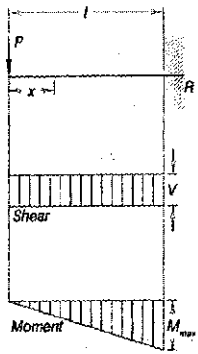

Total Equiv. Uniform Load ..... $= 8P$

$R = V$ ..... $= P$

M_{max} (at fixed end) ..... $= Pl$

M_x ..... $= Px$

Δ_{max} (at free end) ..... $= \frac{Pl^3}{3EI}$

Δ_x ..... $= \frac{P}{6EI}\left(2l^3 - 3l^2x + x^3\right)$

23. BEAM FIXED AT ONE END, FREE TO DEFLECT VERTICALLY BUT NOT ROTATE AT OTHER — CONCENTRATED LOAD AT DEFLECTED END

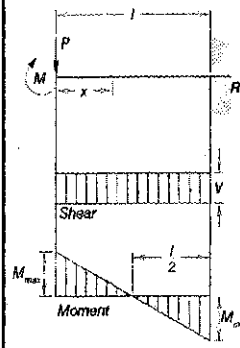

Total Equiv. Uniform Load ..... $= 4P$

$R = V$ ..... $= P$

M_{max} (at both ends) ..... $= \frac{Pl}{2}$

M_x ..... $= P\left(\frac{l}{2} - x\right)$

Δ_{max} (at deflected end) ..... $= \frac{Pl^3}{12EI}$

Δ_x ..... $= \frac{P(l-x)^2}{12EI}(l+2x)$

Table 3-23 (continued)
Shears, Moments and Deflections

24. BEAM OVERHANGING ONE SUPPORT — UNIFORMLY DISTRIBUTED LOAD

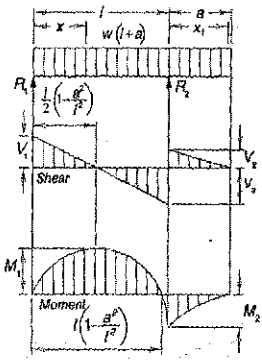

$R_1 = V_1$ ..... $= \frac{w}{2l}(l^2 - a^2)$

$R_2 = V_2 + V_3$ ..... $= \frac{w}{2l}(l+a)^2$

V_2 ..... $= wa$

V_3 ..... $= \frac{w}{2l}(l^2 + a^2)$

V_x (between supports) ..... $= R_1 - wx$

V_{x_1} (for overhang) ..... $= w(a - x_1)$

M_1 $\left(\text{at } x = \frac{l}{2}\left[1 - \frac{a^2}{l^2}\right]\right)$ ..... $= \frac{w}{8l^2}(l+a)^2(l-a)^2$

M_2 (at R_2) ..... $= \frac{wa^2}{2}$

M_x (between supports) ..... $= \frac{wx}{2l}(l^2 - a^2 - xl)$

M_{x_1} (for overhang) ..... $= \frac{w}{2}(a - x_1)^2$

Δ_x (between supports) ..... $= \frac{wx}{24El}\left(l^4 - 2l^2x^2 + lx^3 - 2a^2l^2 + 2a^2x^2\right)$

Δ_{x_1} (for overhang) ..... $= \frac{wx_1}{24El}\left(4a^2l - l^3 + 6a^2x_1 - 4ax_1^2 + x_1^3\right)$

NOTE: For a negative value of Δ_x deflection is upward.

25. BEAM OVERHANGING ONE SUPPORT — UNIFORMLY DISTRIBUTED LOAD ON OVERHANG

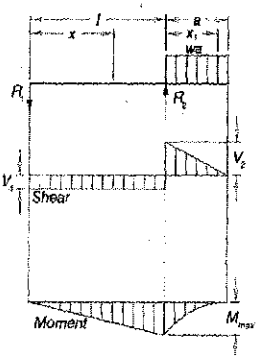

$R_1 = V_1$ ..... $= \frac{wa^2}{2l}$

$R_2 = V_1 + V_2$ ..... $= \frac{wa}{2l}(2l+a)$

V_2 ..... $= wa$

V_{x_1} (for overhang) ..... $= w(a - x_1)$

M_{max} (at R_2) ..... $= \frac{wa^2}{2}$

M_x (between supports) ..... $= \frac{wa^2x}{2l}$

M_{x_1} (for overhang) ..... $= \frac{w}{2}(a - x_1)^2$

Δ_{max} $\left(\text{between supports at } x = \frac{l}{\sqrt{3}}\right) = \frac{wa^2l^2}{18\sqrt{3}El} = 0.0321\frac{wa^2l^2}{El}$

Δ_{max} (for overhang at $x_1 = a$) ..... $= \frac{wa^3}{24El}(4l + 3a)$

Δ_x (between supports) ..... $= \frac{wa^2x}{12El}(l^2 - x^2)$

Δ_{x_1} (for overhang) ..... $= \frac{wx_1}{24El}\left(4a^2l + 6a^2x_1 - 4ax_1^2 + x_1^3\right)$

Table 3-23 (continued)
Shears, Moments and Deflections

26. BEAM OVERHANGING ONE SUPPORT — CONCENTRATED LOAD AT END OF OVERHANG

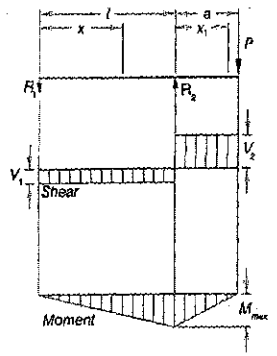

$R_1 = V_1 = \frac{Pa}{l}$

$R_2 = V_1 + V_2 = \frac{P}{l}(l+a)$

$V_2 = P$

M_{max} (at R_2) $= Pa$

M_x (between supports) $= \frac{Pax}{l}$

M_{x_1} (for overhang) $= P(a - x_1)$

Δ_{max} (between supports at $x = \frac{l}{\sqrt{3}}$) $= \frac{Pal^2}{9\sqrt{3}EI} = 0.0642\frac{Pal^2}{EI}$

Δ_{max} (for overhang at $x_1 = a$) $= \frac{Pa^2}{3EI}(l+a)$

Δ_x (between supports) $= \frac{Pax}{6EIl}\left(l^2 - x^2\right)$

Δ_{x_1} (for overhang) $= \frac{Px_1}{6EI}\left(2al + 3ax_1 - x_1^2\right)$

27. BEAM OVERHANGING ONE SUPPORT — UNIFORMLY DISTRIBUTED LOAD BETWEEN SUPPORTS

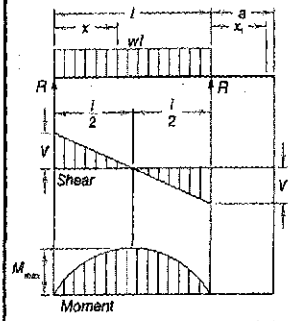

Total Equiv. Uniform Load $= wl$

$R = V = \frac{wl}{2}$

$V_x = w\left(\frac{l}{2} - x\right)$

M_{max} (at center) $= \frac{wl^2}{8}$

$M_x = \frac{wx}{2}(l - x)$

Δ_{max} (at center) $= \frac{5wl^4}{384\,EI}$

$\Delta_x = \frac{wx}{24\,EI}\left(l^3 - 2lx^2 + x^3\right)$

$\Delta_{x_1} = \frac{wl^3 x_1}{24\,EI}$

28. BEAM OVERHANGING ONE SUPPORT — CONCENTRATED LOAD AT ANY POINT BETWEEN SUPPORTS

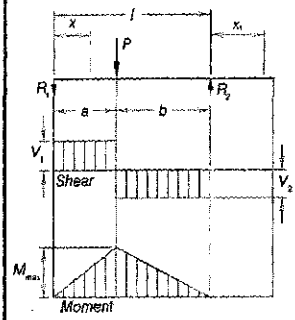

Total Equiv. Uniform Load $= \frac{8Pab}{l^2}$

$R_1 = V_1$ ($= V_{max}$ when $a < b$) $= \frac{Pb}{l}$

$R_2 = V_2$ ($= V_{max}$ when $a > b$) $= \frac{Pa}{l}$

M_{max} (at point of load) $= \frac{Pab}{l}$

M_x (when $x < a$) $= \frac{Pbx}{l}$

Δ_{max} $\left(\text{at } x = \sqrt{\frac{a(a+2b)}{3}} \text{ when } a > b\right)$ $= \frac{Pab(a+2b)\sqrt{3a(a+2b)}}{27\,EIl}$

Δ_a (at point of load) $= \frac{Pa^2b^2}{3EIl}$

Δ_x (when $x < a$) $= \frac{Pbx}{6EIl}\left(l^2 - b^2 - x^2\right)$

Δ_x (when $x > a$) $= \frac{Pa(l-x)}{6EIl}\left(2lx - x^2 - a^2\right)$

$\Delta_{x_1} = \frac{Pabx_1}{6EIl}(l+a)$

Table 3-23 (continued)
Shears, Moments and Deflections

29. CONTINUOUS BEAM — TWO EQUAL SPANS — UNIFORM LOAD ON ONE SPAN

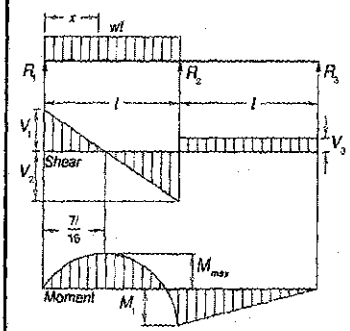

Total Equiv. Uniform Load ..... $= \frac{49}{64}wl$

$R_1 = V_1$ ..... $= \frac{7}{16}wl$

$R_2 = V_2 + V_3$ ..... $= \frac{5}{8}wl$

$R_3 = V_3$ ..... $= -\frac{1}{16}wl$

V_2 ..... $= \frac{9}{16}wl$

M_{max} (at $x = \frac{7}{16}l$) ..... $= \frac{49}{512}wl^2$

M_1 (at support R_2) ..... $= \frac{1}{16}wl^2$

M_x (when $x < l$) ..... $= \frac{wx}{16}(7l - 8x)$

Δ_{max} (at 0.472 l from R_1) ..... $= \frac{0.0092\,wl^4}{EI}$

30. CONTINUOUS BEAM — TWO EQUAL SPANS — CONCENTRATED LOAD AT CENTER OF ONE SPAN

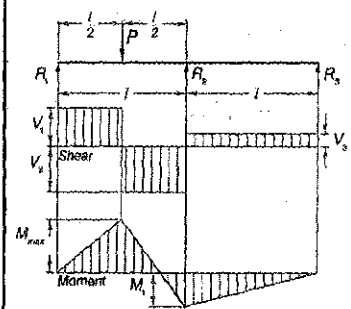

Total Equiv. Uniform Load ..... $= \frac{13}{8}P$

$R_1 = V_1$ ..... $= \frac{13}{32}P$

$R_2 = V_2 + V_3$ ..... $= \frac{11}{16}P$

$R_3 = V_3$ ..... $= -\frac{3}{32}P$

V_2 ..... $= \frac{19}{32}P$

M_{max} (at point of load) ..... $= \frac{13}{64}Pl$

M_1 (at support R_2) ..... $= \frac{3}{32}Pl$

Δ_{max} (at 0.480 l from R_1) ..... $= \frac{0.015\,Pl^3}{EI}$

31. CONTINUOUS BEAM — TWO EQUAL SPANS — CONCENTRATED LOAD AT ANY POINT

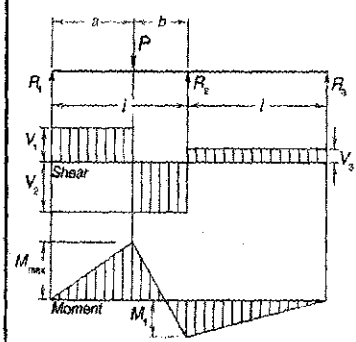

$R_1 = V_1$ ..... $= \frac{Pb}{4l^3}\left(4l^2 - a(l+a)\right)$

$R_2 = V_2 + V_3$ ..... $= \frac{Pa}{2l^3}\left(2l^2 + b(l+a)\right)$

$R_3 = V_3$ ..... $= -\frac{Pab}{4l^3}(l+a)$

V_2 ..... $= \frac{Pa}{4l^3}\left(4l^2 + b(l+a)\right)$

M_{max} (at point of load) ..... $= \frac{Pab}{4l^3}\left(4l^2 - a(l+a)\right)$

M_1 (at support R_2) ..... $= \frac{Pab}{4l^2}(l+a)$

Table 3-23 (continued)
Shears, Moments and Deflections

32. BEAM — UNIFORMLY DISTRIBUTED LOAD AND VARIABLE END MOMENTS

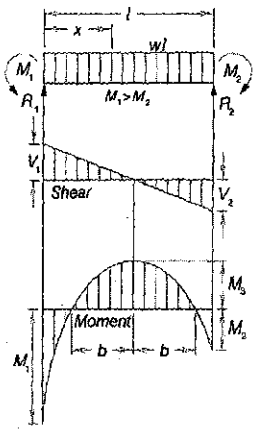

$$R_1 = V_1 \quad = \frac{wl}{2} + \frac{M_1 - M_2}{l}$$

$$R_2 = V_2 \quad = \frac{wl}{2} - \frac{M_1 - M_2}{l}$$

$$V_x \quad = w\left(\frac{l}{2} - x\right) + \frac{M_1 - M_2}{l}$$

$$M_s \quad \left(\text{at } x = \frac{l}{2} + \frac{M_1 - M_2}{wl}\right) \quad = \frac{wl^2}{8} - \frac{M_1 + M_2}{2} + \frac{(M_1 - M_2)^2}{2wl^2}$$

$$M_x \quad = \frac{wx}{2}(l - x) + \left(\frac{M_1 - M_2}{l}\right)x - M_1$$

$$b \text{ (to locate inflection points)} \quad = \sqrt{\frac{l^2}{4} - \left(\frac{M_1 + M_2}{w}\right) + \left(\frac{M_1 - M_2}{wl}\right)^2}$$

$$\Delta_x = \frac{wx}{24EI}\left[x^3 - \left(2l + \frac{4M_1}{wl} - \frac{4M_2}{wl}\right)x^2 + \frac{12M_1}{w}x + l^3 - \frac{8M_1 l}{w} - \frac{4M_2 l}{w}\right]$$

33. BEAM — CONCENTRATED LOAD AT CENTER AND VARIABLE END MOMENTS

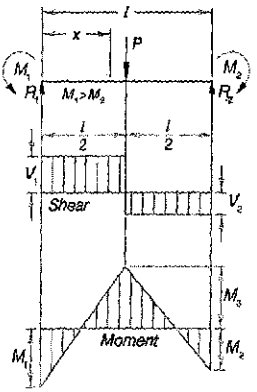

$$R_1 = V_1 \quad = \frac{P}{2} + \frac{M_1 - M_2}{l}$$

$$R_2 = V_2 \quad = \frac{P}{2} - \frac{M_1 - M_2}{l}$$

$$M_s \quad \text{(at center)} \quad = \frac{Pl}{4} - \frac{M_1 + M_2}{2}$$

$$M_x \quad \left(\text{when } x < \frac{l}{2}\right) \quad = \left(\frac{P}{2} + \frac{M_1 - M_2}{l}\right)x - M_1$$

$$M_x \quad \left(\text{when } x > \frac{l}{2}\right) \quad = \frac{P}{2}(l - x) + \frac{(M_1 - M_2)x}{l} - M_1$$

$$\Delta_x \quad \left(\text{when } x < \frac{l}{2}\right) = \frac{Px}{48EI}\left(3l^2 - 4x^2 - \frac{8(l - x)}{Pl}\left[M_1(2l - x) + M_2(l + x)\right]\right)$$

Table 3-23 (continued)
Shears, Moments and Deflections

34. SIMPLE BEAM — LOAD INCREASING UNIFORMLY FROM CENTER

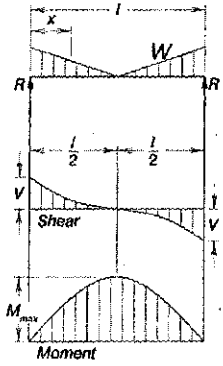

Total Equiv. Uniform Load ..... $= \frac{2W}{3}$

$R = V$ ..... $= \frac{W}{2}$

V_x (when $x < \frac{l}{2}$) ..... $= \frac{W}{2}\left(\frac{l-2x}{l}\right)^2$

M_{max} (at center) ..... $= \frac{Wl}{12}$

M_x (when $x < \frac{l}{2}$) ..... $= \frac{W}{2}\left(x - \frac{2x^2}{l} + \frac{4x^3}{3l^2}\right)$

Δ_{max} (at center) ..... $= \frac{3Wl^3}{320EI}$

Δ_x (when $x < \frac{l}{2}$) ..... $= \frac{W}{12EI}\left(x^3 - \frac{x^4}{l} + \frac{2x^5}{5l^2} - \frac{3l^2x}{8}\right)$

35. SIMPLE BEAM — CONCENTRATED MOMENT AT END

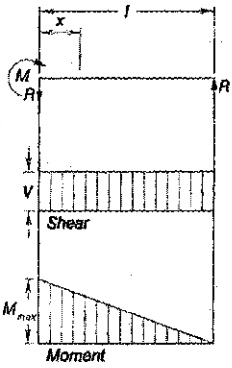

Total Equiv. Uniform Load ..... $= \frac{6M}{l}$

$R = V$ ..... $= \frac{M}{l}$

M_{max} ..... $= M$

M_x ..... $= M\left(1 - \frac{x}{l}\right)$

Δ_{max} (at $x = 0.423\ l$) ..... $= 0.0642\frac{Ml^2}{EI}$

Δ_x ..... $= \frac{M}{6EI}\left(3x^2 - \frac{x^3}{l} - 2lx\right)$

36. SIMPLE BEAM — CONCENTRATED MOMENT AT ANY POINT

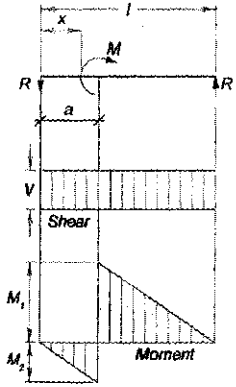

Total Equiv. Uniform Load ..... $= \frac{6M}{l}$

$R = V$ ..... $= \frac{M}{l}$

M_x (when $x < a$) ..... $= Rx$

M_x (when $x > a$) ..... $= R(l - x)$

Δ_x (when $x < a$) ..... $= \frac{M}{6EI}\left[\left(6a - \frac{3a^2}{l} - 2l\right)x - \frac{x^3}{l}\right]$

Δ_x (when $x > a$) ..... $= \frac{M}{6EI}\left[3\left(a^2 + x^2\right) - \frac{x^3}{l} - \left(2l + \frac{3a^2}{l}\right)x\right]$

Table 3-23 (continued)
Shears, Moments and Deflections

37. CONTINUOUS BEAM — THREE EQUAL SPANS — ONE END SPAN UNLOADED

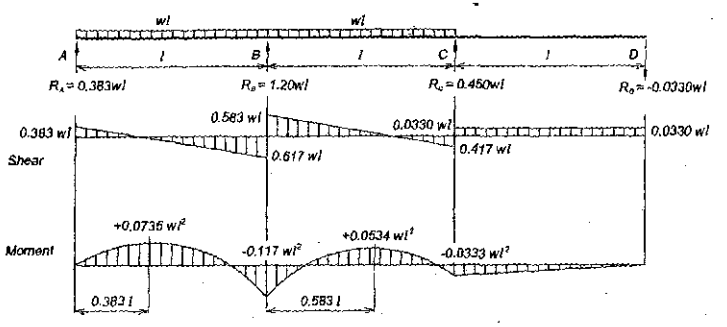

Δ_{max} (0.430l from A) = 0.0059 wl⁴/EI

38. CONTINUOUS BEAM — THREE EQUAL SPANS — END SPANS LOADED

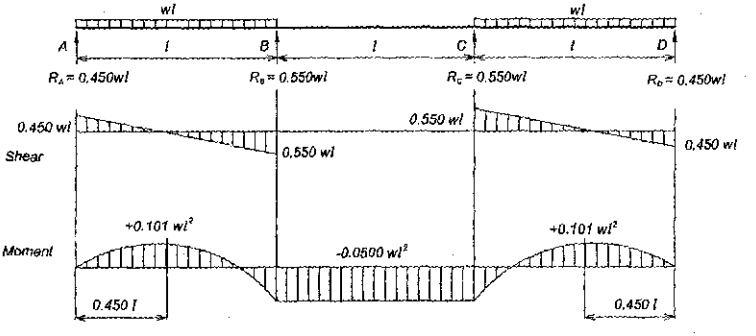

Δ_{max} (0.479l from A or D) = 0.0099 wl⁴/EI

39. CONTINUOUS BEAM — THREE EQUAL SPANS — ALL SPANS LOADED

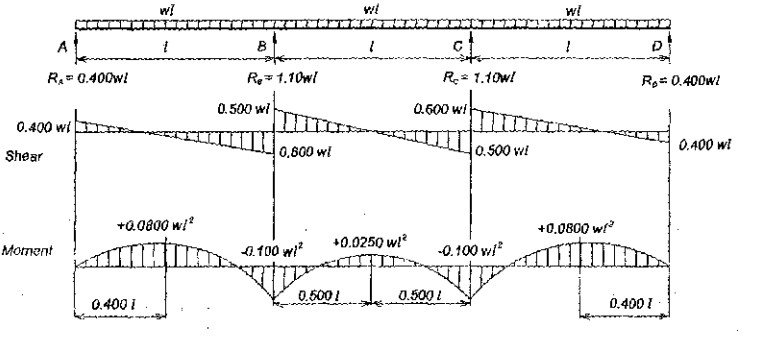

Δ_{max} (0.446l from A or D) = 0.0069 wl⁴/EI

Table 3-23 (continued)
Shears, Moments and Deflections

40. CONTINUOUS BEAM — FOUR EQUAL SPANS — THIRD SPAN UNLOADED

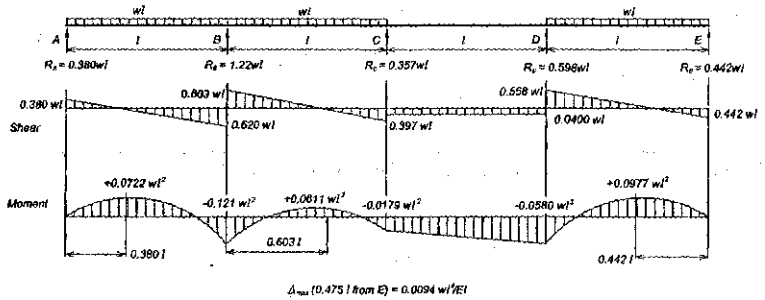

41. CONTINUOUS BEAM — FOUR EQUAL SPANS — LOAD FIRT AND THIRD SPANS

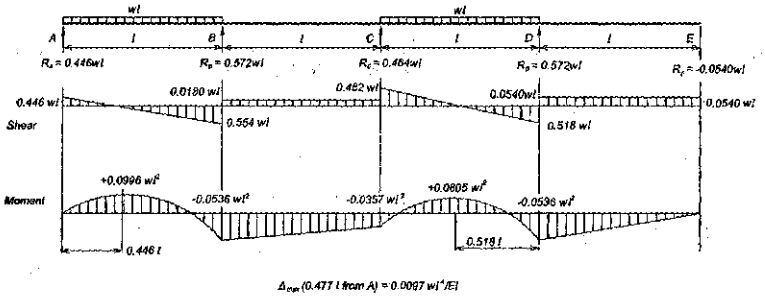

42. CONTINUOUS BEAM — FOUR EQUAL SPANS — ALL SPANS LOADED

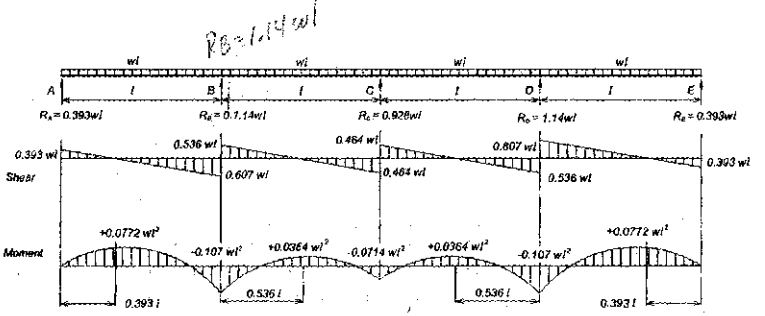

Table 3-23 (continued)
Shears, Moments and Deflections

43. SIMPLE BEAM — ONE CONCENTRATED MOVING LOAD

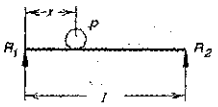

$$R_{1\,max} = V_{1\,max} (\text{at } x = 0) \quad \ldots\ldots = P$$

$$M_{max} \left(\text{at point of load, when } x = \frac{l}{2} \right) \quad \ldots\ldots = \frac{Pl}{4}$$

44. SIMPLE BEAM — TWO EQUAL CONCENTRATED MOVING LOADS

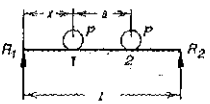

$$R_{1\,max} = V_{1\,max} (\text{at } x = 0) \quad \ldots\ldots = P\left(2 - \frac{a}{l}\right)$$

$$M_{max} \begin{cases} \left[\begin{array}{l}\text{when } a < (2 - \sqrt{2})l = 0.586l \\ \text{under load 1 at } x = \frac{1}{2}\left(l - \frac{a}{2}\right)\end{array}\right] \quad \ldots\ldots = \frac{P}{2l}\left(l - \frac{a}{2}\right)^2 \\ \left[\begin{array}{l}\text{when } a > (2 - \sqrt{2})l = 0.586l \\ \text{with one load at center of span (Case 43)}\end{array}\right] \quad \ldots\ldots = \frac{Pl}{4} \end{cases}$$

45. SIMPLE BEAM — TWO UNEQUAL CONCENTRATED MOVING LOADS

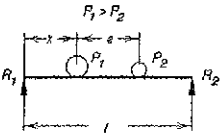

$$R_{1\,max} = V_{1\,max} (\text{at } x = 0) \quad \ldots\ldots = P_1 + P_2\frac{l - a}{l}$$

$$M_{max} \begin{cases} \left[\text{under } P_1, \text{ at } x = \frac{1}{2}\left(l - \frac{P_2 a}{P_1 + P_2}\right)\right] \quad \ldots\ldots = (P_1 + P_2)\frac{x^2}{l} \\ \left[\begin{array}{l}M_{max} \text{ may occur with larger} \\ \text{load at center of span and other} \\ \text{load off span (Case 43)}\end{array}\right] \quad \ldots\ldots = \frac{P_1 l}{4} \end{cases}$$

GENERAL RULES FOR SIMPLE BEAMS CARRYING MOVING CONCENTRATED LOADS

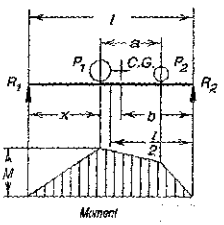

The maximum shear due to moving concentrated loads occurs at one support when one of the loads is at that support. With several moving loads, the location that will produce maximum shear must be determined by trial.

The maximum bending moment produced by moving concentrated loads occurs under one of the loads when that load is as far from one support as the center of gravity of all the moving loads on the beam is from the other support.

In the accompanying diagram, the maximum bending moment occurs under load P_1 when $x = b$. It should also be noted that this condition occurs when the centerline of the span is midway between the center of gravity of loads and the nearest concentrated load.

PART 4
DESIGN OF COMPRESSION MEMBERS

SCOPE 4–3
AVAILABLE COMPRESSIVE STRENGTH 4–3
LOCAL BUCKLING 4–3
Determining the Width-to-Thickness Ratios of the Cross Section 4–3
Determining the Slenderness of the Cross Section 4–3
EFFECTIVE LENGTH AND COLUMN SLENDERNESS 4–3
COMPOSITE COMPRESSION MEMBERS 4–4
DESIGN TABLE DISCUSSION 4–4
Steel Compression—Member Selection Tables 4–4
Composite Compression—Member Selection Tables 4–9
PART 4 REFERENCES 4–11
STEEL COMPRESSION—MEMBER SELECTION TABLES 4–12
Table 4-1. W-Shapes in Axial Compression 4–12
Table 4-2. HP-Shapes in Axial Compression 4–24
Table 4-3. Rectangular HSS in Axial Compression 4–28
Table 4-4. Square HSS in Axial Compression 4–52
Table 4-5. Round HSS in Axial Compression 4–68
Table 4-6. Pipe in Axial Compression 4–85
Table 4-7. WT-Shapes in Axial Compression 4–89
Table 4-8. Equal-Leg Double Angles in Axial Compression 4–122
Table 4-9. LLBB Double Angles in Axial Compression 4–131
Table 4-10. SLBB Double Angles in Axial Compression 4–146
Table 4-11. Concentrically Loaded Single Angles in Axial Compression 4–161
Table 4-12. Eccentrically Loaded Single Angles in Axial Compression 4–183
COMPOSITE COMPRESSION—MEMBER SELECTION TABLES 4–205
Table 4-13. Rectangular HSS Filled with 4-ksi Normal Weight Concrete in Axial Compression 4–205
Table 4-14. Rectangular HSS Filled with 5-ksi Normal Weight Concrete in Axial Compression 4–226
Table 4-15. Square HSS Filled with 4-ksi Normal Weight Concrete in Axial Compression 4–247

Table 4-16. Square HSS Filled with 5-ksi Normal Weight Concrete in Axial Compression 4–263
Table 4-17. Round HSS Filled with 4-ksi Normal Weight Concrete in Axial Compression 4–279
Table 4-18. Round HSS Filled with 5-ksi Normal Weight Concrete in Axial Compression 4–296
Table 4-19. Pipe Filled with 4-ksi Normal Weight Concrete in Axial Compression 4–313
Table 4-20. Pipe Filled with 5-ksi Normal Weight Concrete in Axial Compression 4–317
Table 4-21. Stiffness Reduction Factor τ_b 4–321
Table 4-22. Available Critical Stress for Compression Members 4–322

SCOPE

The specification requirements and other design considerations summarized in this Part apply to the design of members subject to axial compression. For the design of members subject to eccentric compression or combined axial compression and flexure, see Part 6.

AVAILABLE COMPRESSIVE STRENGTH

The available strength of compression members, ϕP_n or P_n/Ω, which must equal or exceed the required strength, P_u or P_a, respectively, is determined according to AISC *Specification* Chapter E.

LOCAL BUCKLING

Determining the Width-to-Thickness Ratios of the Cross Section

Steel compression members are classified on the basis of the width-to-thickness ratios of the various elements of the cross section. The width-to-thickness ratio is calculated for each element of the cross section per AISC *Specification* Section B4.

Determining the Slenderness of the Cross Section

When the width-to-thickness ratios of all compression elements are less than or equal to λ_r, the cross section is nonslender, and Q, the reduction factor for slender compression elements (elastic local buckling effects), equals 1.0. When the width-to-thickness ratio of a compression element is greater than λ_r, the cross section is a slender-element cross section and Q must be included in the calculation of the available compressive strength. Q is determined per AISC *Specification* Section E7, and λ_r is determined per AISC *Specification* Section B4 and Table B4.1a.

EFFECTIVE LENGTH AND COLUMN SLENDERNESS

Columns are designed for their slenderness, KL/r, per AISC *Specification* Section E2. The effective length, KL, is equal to the effective length factor, K, multiplied by L, the physical length between braced points (see AISC *Specification* Appendix 6).

When a stability analysis is performed using the direct analysis method per AISC *Specification* Chapter C, $K = 1$.

When a stability analysis is performed using the first-order analysis method in AISC *Specification* Appendix Section 7.3, $K = 1$.

When a stability analysis is performed using the effective length method in AISC *Specification* Appendix Section 7.2, the following applies:

$K = 1$ for columns braced at each end and whose flexural stiffnesses are not considered to contribute to lateral stability and resistance to lateral loads.

$K = 1$ for all columns when the ratio of maximum second-order drift to first-order drift in all stories is less than 1.1.

K shall be determined from a sidesway buckling analysis for all columns whose flexural stiffnesses are considered to contribute to lateral stability and resistance to lateral

loads. Guidance on the proper determination of the value of K is given in AISC *Specification* Commentary to Appendix Section 7.2.

As indicated in the User Note in AISC *Specification* Section E2, compression member slenderness, KL/r, should preferably be limited to a maximum of 200. Note that this recommendation does not apply to members that are primarily tension members, but subject to incidental compression under other load combinations.

Additional information is available in the SSRC *Guide to Stability Design Criteria for Metal Structures* (Ziemian, 2010).

COMPOSITE COMPRESSION MEMBERS

For the design of encased composite and filled composite compression members, see AISC *Specification* Section I2. See also AISC Design Guide 6, *Load and Resistance Factor Design of W-Shapes Encased in Concrete* (Griffis, 1992). For further information on composite design and construction, see also Viest et al. (1997).

DESIGN TABLE DISCUSSION

Steel Compression—Member Selection Tables

Table 4-1. W-Shapes in Axial Compression

Available strengths in axial compression are given for W-shapes with $F_y = 50$ ksi (ASTM A992). The tabulated values are given for the effective length with respect to the y-axis $(KL)_y$. However, the effective length with respect to the x-axis $(KL)_x$ must also be investigated. To determine the available strength in axial compression, the table should be entered at the larger of $(KL)_y$ and $(KL)_{y\,eq}$, where

$$(KL)_{y\,eq} = \frac{(KL)_x}{\frac{r_x}{r_y}} \tag{4-1}$$

Values of the ratio r_x/r_y and other properties useful in the design of W-shape compression members are listed at the bottom of Table 4-1.

Variables P_{wo}, P_{wi}, P_{wb} and P_{fb} shown in Table 4-1 can be used to determine the strength of W-shapes without stiffeners to resist concentrated forces applied normal to the face(s) of the flange(s). In these tables it is assumed that the concentrated forces act far enough away from the member ends that end effects are not considered (end effects are addressed in Chapter 9). When $P_r \le \phi R_n$ or R_n/Ω, column web stiffeners are not required. Figures 4-1, 4-2 and 4-3 illustrate the limit states and the applicable variables for each.

Web Local Yielding: The variables P_{wo} and P_{wi} can be used in the calculation of the available web local yielding strength for the column as follows:

LRFD	ASD
$\phi R_n = P_{wo} + P_{wi} l_b$ (4-2a)	$R_n/\Omega = P_{wo} + P_{wi} l_b$ (4-2b)

where

$R_n = F_{yw}t_w(5k + l_b) = 5F_{yw}t_wk + F_{yw}t_wl_b$, kips (AISC *Specification* Equation J10-2)
$P_{wo} = \phi 5F_{yw}t_wk$ for LRFD and $5F_{yw}t_wk/\Omega$ for ASD, kips
$P_{wi} = \phi F_{yw}t_w$ for LRFD and $F_{yw}t_w/\Omega$ for ASD, kips/in.
k = distance from outer face of flange to the web toe of fillet, in.
l_b = length of bearing, in.
t_w = thickness of web, in.
ϕ = 1.00
Ω = 1.50

Web Compression Buckling: The variable P_{wb} is the available web compression buckling strength for the column as follows:

LRFD	ASD
$\phi R_n = P_{wb}$ (4-3a)	$R_n/\Omega = P_{wb}$ (4-3b)

where

$$R_n = \frac{24t_w^3\sqrt{EF_{yw}}}{h}$$ (AISC *Specification* Equation J10-8)

$$P_{wb} = \frac{\phi 24t_w^3\sqrt{EF_{yw}}}{h}$$ for LRFD and $$\frac{24t_w^3\sqrt{EF_{yw}}}{\Omega h}$$ for ASD, kips

F_{yw} = specified minimum yield stress of the web, ksi
h = clear distance between flanges less the fillet or corner radius for rolled shapes, in.
ϕ = 0.90
Ω = 1.67

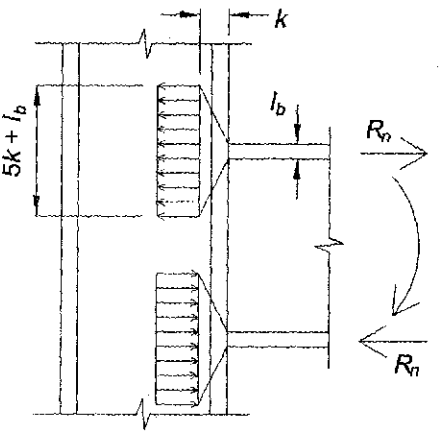

Fig. 4-1. Illustration of web local yielding limit state (AISC Specification Section J10.2).

Flange Local Buckling: The variable P_{fb} is the available flange local bending strength for the column as follows:

LRFD		ASD	
$\phi R_n = P_{fb}$	(4-4a)	$R_n/\Omega = P_{fb}$	(4-4b)

where

$R_n = 6.25F_{yf}t_f^2$, kips (AISC *Specification* Equation J10-1)

$P_{fb} = \phi 6.25F_{yf}t_f^2$ for LRFD and $6.25F_{yf}t_f^2/\Omega$ for ASD, kips

$\phi = 0.90$

$\Omega = 1.67$

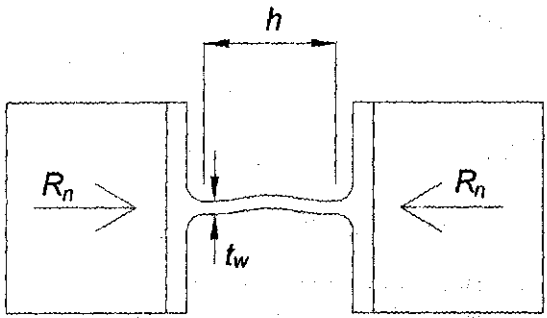

Fig. 4-2. Illustration of web compression buckling limit state (AISC Specification Section J10.5).

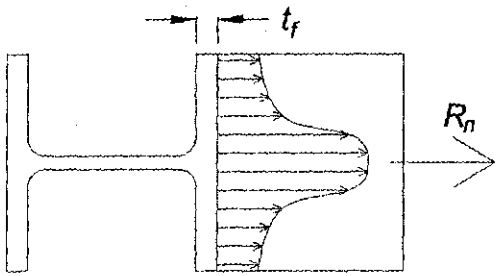

Fig. 4-3. Illustration of flange local bending limit state (AISC Specification Section J10.1).

Table 4-2. HP-Shapes in Axial Compression

Table 4-2 is similar to Table 4-1, except it covers HP-shapes with $F_y = 50$ ksi (ASTM A572 Grade 50).

Table 4-3. Rectangular HSS in Axial Compression

Available strengths in axial compression are given for rectangular HSS with $F_y = 46$ ksi (ASTM A500 Grade B). The tabulated values are given for the effective length with respect to the y-axis, $(KL)_y$. However, the effective length with respect to the x-axis $(KL)_x$ must also be investigated. To determine the available strength in axial compression, the table should be entered at the larger of $(KL)_y$ and $(KL)_{y\,eq}$, where

$$(KL)_{y\,eq} = \frac{(KL)_x}{\frac{r_x}{r_y}} \tag{4-1}$$

Values of the ratio r_x/r_y and other properties useful in the design of rectangular HSS compression members are listed at the bottom of Table 4-3.

Table 4-4. Square HSS in Axial Compression

Table 4-4 is similar to Table 4-3, except that it covers square HSS.

Table 4-5. Round HSS in Axial Compression

Available strengths in axial compression are given for round HSS with $F_y = 42$ ksi (ASTM A500 Grade B). To determine the available strength in axial compression, the table should be entered at KL. Other properties useful in the design of compression members are listed at the bottom of the available column strength tables.

Table 4-6. Pipe in Axial Compression

Table 4-6 is similar to Table 4-5, except it covers pipe with $F_y = 35$ ksi (ASTM A53 Grade B).

Table 4-7. WT-Shapes in Axial Compression

Available strengths in axial compression, including the limit state of flexural-torsional buckling, are given for WT-shapes with $F_y = 50$ ksi (ASTM A992). Separate tabulated values are given for the effective lengths with respect to the x- and y-axes, $(KL)_x$ and $(KL)_y$, respectively. Other properties useful in the design of WT-shape compression members are listed at the bottom of Table 4-7.

Table 4-8. Equal-Leg Double Angles in Axial Compression

Available strengths in axial compression, including the limit state of flexural-torsional buckling, are given for equal-leg double angles with $F_y = 36$ ksi (ASTM A36), assuming $^3/_8$-in. separation between the angles. These values can be used conservatively when a larger separation is provided. Alternatively, the value of $(KL)_y$ can be multiplied by the ratio of (r_y for a $^3/_8$-in. separation) to (r_y for the actual separation).

Separate tabulated values are given for the effective lengths with respect to the x- and y-axes, $(KL)_x$ and $(KL)_y$, respectively. For buckling about the x-axis, the available strength

is not affected by the number of intermediate connectors. However, for buckling about the y-axis, the effects of shear deformations of the intermediate connectors must be considered. The tabulated values for $(KL)_y$ have been adjusted for the shear deformations in accordance with AISC *Specification* Equations E6-2a and E6-2b, which is applicable to welded and pretensioned bolted intermediate shear connectors. The number of intermediate connectors, n, is given in the table and the line of demarcation between the required connector values is dashed. Intermediate connectors are selected such that the available compression buckling strength about the y-axis is equal to or greater than 90% of that for compression buckling of the two angles as a unit. If fewer connectors or snug-tightened bolted intermediate connectors are used, the available strength must be recalculated per AISC *Specification* Section E6. Per AISC *Specification* Section E6.2, the slenderness of the individual components of the built-up member based upon the distance between intermediate connectors, a, must not exceed three-quarters of the controlling slenderness of the overall built-up compression member.

Other properties useful in the design of double-angle compression members are listed at the bottom of Table 4-8.

Table 4-9. LLBB Double Angles in Axial Compression

Table 4-9 is the same as Table 4-8, except that it provides available strengths in axial compression for double angles with long legs back-to-back.

Table 4-10. SLBB Double Angles in Axial Compression

Table 4-10 is the same as Table 4-8, except that it provides available strengths in axial compression for double angles with short legs back-to-back.

Table 4-11. Concentrically Loaded Single Angles in Axial Compression

Available strengths in axial compression are given for single angles, loaded through the centroid of the cross section, with $F_y = 36$ ksi (ASTM A36) based upon the effective length with respect to the z-axis, $(KL)_z$. Single angles may be assumed to be loaded through the centroid when the requirements of AISC *Specification* Section E5 are met, as in these cases the eccentricity is accounted for and the slenderness is reduced by the restraining effects of the support at both ends of the member.

Table 4-12. Eccentrically Loaded Single Angles in Axial Compression

Available strengths in axial compression are given for eccentrically loaded single angles with $F_y = 36$ ksi (ASTM A36).

The long leg of the angle is assumed to be attached to a gusset plate with a thickness of $1.5t$. The tabulated values assume a load placed at the mid-width of the long leg of the angle at a distance of $0.75t$ from the face of this leg.

Effective length, KL, is assumed to be the same on all axes (r_x, r_y, r_z and r_w). Table 4-12 considers the combined bending stresses at the heel and the tips of the angle (points A, B and C in Figure 4-4) produced by axial compression plus biaxial bending moments about

the principal *w*- and *z*-axes using AISC *Specification* Equation H2-1. Points A and C are assumed at the angle mid-thickness at distances *b* and *d* (respectively) from the heel.

Note that for some sections, such as L3½×3×5/16, the calculated available strength can increase slightly as the unbraced length increases from zero, and then decrease as the unbraced length further increases.

Composite Compression—Member Selection Tables

Table 4-13. Rectangular HSS Filled with 4-ksi Normal Weight Concrete in Axial Compression

Available strengths in axial compression are given for rectangular HSS with $F_y = 46$ ksi (ASTM A500 Grade B) filled with 4-ksi normal weight concrete. The tabulated values are given for the effective length with respect to the *y*-axis $(KL)_y$. However, the effective length with respect to the *x*-axis $(KL)_x$ must also be investigated. To determine the available strength in axial compression, the table should be entered at the larger of $(KL)_y$ and $(KL)_{y\,eq}$, where

$$(KL)_{y\,eq} = \frac{(KL)_x}{\frac{r_{mx}}{r_{my}}} \tag{4-5}$$

Values of the ratio r_{mx}/r_{my} and other properties useful in the design of composite HSS compression members are listed at the bottom of Table 4-13. The variables r_{mx} and r_{my} are the radii of gyration for the composite cross section. The ratio r_{mx}/r_{my} is determined as

$$\frac{r_{mx}}{r_{my}} = \sqrt{\frac{P_{ex}(K_xL_x)^2}{P_{cy}(K_yL_y)^2}} \tag{4-6}$$

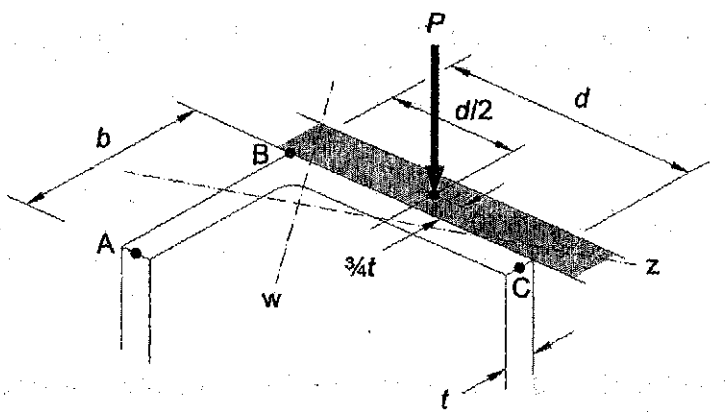

Fig. 4-4. Eccentrically loaded single angle.

For compact composite sections, the values of ϕM_n and M_n/Ω were calculated using the nominal moment strength equations for point B of the interaction diagram in Table C of the *Discussion of Limit State Response of Composite Columns and Beam-Columns Part II: Application of Design Provisions for the 2005 AISC Specification* (Geschwindner, 2010). For noncompact sections, the values of ϕM_n and M_n/Ω were calculated using the closed formed equations presented in the Commentary Figure C-I3-7.

The available strengths tabulated in Tables 4-13 through 4-20 are given for the indicated shape with the associated concrete fill. AISC *Specification* Section I2.2b stipulates that the available compressive strength of a filled composite member need not be less than that specified for a bare steel member. In these tables, available strengths controlled by the bare steel acting alone are identified. Additionally, there is no longitudinal reinforcement provided, because there is no requirement for minimum reinforcement in the AISC *Specification*. The use of filled shapes without longitudinal reinforcement is a common industry practice.

Table 4-14. Square HSS Filled with 4-ksi Normal Weight Concrete in Axial Compression

Table 4-14 is the same as Table 4-13, except that it provides available strengths in axial compression for square HSS filled with 4-ksi normal weight concrete.

Table 4-15. Rectangular HSS Filled with 5-ksi Normal Weight Concrete in Axial Compression

Table 4-15 is the same as Table 4-13, except that it provides available strengths in axial compression for rectangular HSS filled with 5-ksi normal weight concrete.

Table 4-16. Square HSS Filled with 5-ksi Normal Weight Concrete in Axial Compression

Table 4-16 is the same as Table 4-13, except that it provides available strengths in axial compression for square HSS filled with 5-ksi normal weight concrete.

Table 4-17. Round HSS Filled with 4-ksi Normal Weight Concrete in Axial Compression

Available strengths in axial compression are given for round HSS with $F_y = 42$ ksi (ASTM A500 Grade B) filled with 4-ksi normal weight concrete. To determine the available strength in axial compression, the table should be entered at the largest effective length, KL. Other properties useful in the design of compression members are listed at the bottom of Table 4-5.

The values of ϕM_n and M_n/Ω were calculated using the nominal moment strength equations for point B of the interaction diagram in Table D of the *Discussion of Limit State Response of Composite Columns and Beam-Columns Part II: Application of Design Provisions for the 2005 AISC Specification* (Geschwindner, 2010).

Table 4-18. Round HSS Filled with 5-ksi Normal Weight Concrete in Axial Compression

Table 4-18 is the same as Table 4-17, except that it provides available strengths in axial compression for round HSS filled with 5-ksi normal weight concrete.

Table 4-19. Pipe Filled with 4-ksi Normal Weight Concrete in Axial Compression

Available strengths in axial compression are given for pipe with F_y = 35 ksi (ASTM A53 Grade B) filled with 4-ksi normal weight concrete. To determine the available strength in axial compression, the table should be entered at the largest effective length, *KL*. Other properties useful in the design of compression members are listed at the bottom of Table 4-6.

Table 4-20. Pipe Filled with 5-ksi Normal Weight Concrete in Axial Compression

Table 4-20 is the same as Table 4-19, except that it provides available strengths in axial compression for pipe filled with 5-ksi normal weight concrete.

Table 4-21. Stiffness Reduction Factor τ_b

When an analysis is performed using the effective length method in AISC *Specification* Appendix Section 7.2, that procedure requires determination of the effective length factor, *K*. A common method of determining *K* is through the use of alignment charts provided in the AISC *Specification* Commentary.

When column buckling occurs in the inelastic range, the alignment charts usually give conservative results. For more accurate solutions, inelastic *K*-factors can be determined from the alignment chart by using τ_b times the elastic modulus of the columns in the equation for *G*. The stiffness reduction factor, τ_b, is the ratio of the tangent modulus, E_T, to the elastic modulus, *E*. Values are tabulated for steels with F_y = 35 ksi, 36 ksi, 42 ksi, 46 ksi and 50 ksi.

Table 4-22. Available Critical Stress for Compression Members

Table 4-22 provides the available critical stress for various ratios of Kl/r, for materials with a minimum specified yield strength of 35 ksi, 36 ksi, 42 ksi, 46 ksi and 50 ksi.

PART 4 REFERENCES

Geschwindner, L.F. (2010), "Discussion of Limit State Responses of Composite Columns and Beam-Columns Part II: Application of Design Provisions for the 2005 AISC Specification," *Engineering Journal*, AISC, Vol. 47, No. 2, 2nd Quarter, pp. 131–139, Chicago, IL.

Griffis, L.G. (1992), *Load and Resistance Factor Design of W-Shapes Encased in Concrete*, Design Guide 6, AISC, Chicago, IL.

Sakla, S. (2001), "Tables for the Design Strength of Eccentrically-Loaded Single Angle Struts," *Engineering Journal*, AISC, Vol. 38, No. 3, 3rd Quarter, pp. 127–136, Chicago, IL.

Viest, I.M., Colaco, J.P., Furlong, R.W., Griffis, L.G., Leon, R.T. and Wyllie, L.A. (1997), *Composite Construction Design for Buildings*, ASCE, New York, NY.

Ziemian, R.D. (ed.) (2010), *Guide to Stability Design Criteria for Metal Structures*, 6th Ed., John Wiley and Sons, Hoboken, NJ.

W14

Table 4-1
Available Strength in Axial Compression, kips
W-Shapes

F_y = 50 ksi

Shape		W14×											
lb/ft		730[h]		665[h]		605[h]		550[h]		500[h]		455[h]	
Design		P_n/Ω_c	$\phi_c P_n$	P_n/Ω_c	$\phi_c P_n$	P_n/Ω_c	$\phi_c P_n$	P_n/Ω_c	$\phi_c P_n$	P_n/Ω_c	$\phi_c P_n$	P_n/Ω_c	$\phi_c P_n$
		ASD	LRFD	ASD	LRFD	ASD	LRFD	ASD	LRFD	ASD	LRFD	ASD	LRFD
Effective length, KL (ft), with respect to least radius of gyration, r_y	0	6440	9670	5870	8820	5330	8010	4850	7290	4400	6610	4010	6030
	11	6070	9130	5530	8310	5010	7530	4550	6840	4120	6200	3750	5640
	12	6010	9030	5470	8220	4950	7440	4500	6760	4070	6120	3710	5570
	13	5940	8920	5400	8110	4890	7350	4440	6670	4020	6040	3660	5500
	14	5860	8810	5330	8010	4820	7250	4380	6580	3960	5950	3600	5420
	15	5780	8690	5250	7890	4750	7140	4310	6480	3900	5860	3550	5330
	16	5690	8560	5170	7770	4680	7030	4240	6380	3840	5770	3490	5240
	17	5610	8430	5090	7650	4600	6920	4170	6270	3770	5660	3420	5150
	18	5510	8290	5000	7520	4520	6790	4100	6160	3700	5560	3360	5050
	19	5420	8140	4910	7380	4440	6670	4020	6040	3630	5450	3290	4950
	20	5320	7990	4820	7240	4360	6540	3940	5920	3550	5340	3220	4840
	22	5110	7670	4620	6950	4170	6260	3770	5660	3390	5100	3080	4620
	24	4890	7340	4420	6640	3980	5980	3590	5400	3230	4860	2920	4400
	26	4660	7000	4200	6320	3780	5680	3410	5120	3060	4600	2770	4160
	28	4420	6650	3990	5990	3580	5380	3220	4840	2890	4340	2610	3920
	30	4180	6290	3760	5660	3370	5070	3030	4560	2720	4080	2450	3680
	32	3940	5930	3540	5320	3170	4760	2840	4270	2540	3820	2290	3440
	34	3700	5560	3320	4990	2980	4450	2650	3990	2370	3560	2130	3200
	36	3460	5200	3100	4650	2760	4140	2460	3700	2200	3300	1970	2960
	38	3220	4850	2880	4330	2560	3840	2280	3430	2030	3050	1820	2730
	40	2990	4500	2670	4010	2360	3550	2100	3160	1870	2800	1670	2510
	42	2770	4160	2460	3690	2170	3270	1930	2900	1710	2570	1520	2290
	44	2550	3830	2260	3390	1990	2990	1760	2650	1560	2340	1390	2080
	46	2330	3510	2060	3100	1820	2730	1610	2420	1420	2140	1270	1910
	48	2140	3220	1900	2850	1670	2510	1480	2220	1310	1960	1160	1750
	50	1970	2970	1750	2630	1540	2310	1360	2050	1200	1810	1070	1610
Properties													
P_{wo}, kips		2820	4230	2410	3620	2060	3090	1750	2630	1500	2240	1280	1920
P_{wi}, kips/in.		102	154	94.3	142	86.7	130	79.3	119	73.0	110	67.3	101
P_{wb}, kips		44000	66100	34400	51700	26600	40100	20500	30800	15900	23900	12500	18800
P_{fb}, kips		4510	6780	3820	5750	3240	4870	2730	4100	2290	3450	1930	2900
L_p, ft		16.6		16.3		16.1		15.9		15.6		15.5	
L_r, ft		275		253		232		213		196		179	
A_g, in.^{2}		215		196		178		162		147		134	
I_x, in.^{4}		14300		12400		10800		9430		8210		7190	
I_y, in.^{4}		4720		4170		3680		3250		2880		2560	
r_y, in.		4.69		4.62		4.55		4.49		4.43		4.38	
r_x/r_y		1.74		1.73		1.71		1.70		1.69		1.67	
$P_{ex}(KL)^2/10^4$, k-in.^{2}		409000		355000		309000		270000		235000		206000	
$P_{ey}(KL)^2/10^4$, k-in.^{2}		135000		119000		105000		93000		82400		73300	

ASD	LRFD
$\Omega_c = 1.67$	$\phi_c = 0.90$

[h] Flange thickness is greater than 2 in. Special requirements may apply per AISC *Specification* Section A3.1c.

Table 4-1 (continued)

Available Strength in Axial Compression, kips

W-Shapes

F_y = 50 ksi

W14

Shape		W14×											
lb/ft		426[h]		398[h]		370[h]		342[h]		311[h]		283[h]	
Design		P_n/Ω_c	$\phi_c P_n$	P_n/Ω_c	$\phi_c P_n$	P_n/Ω_c	$\phi_c P_n$	P_n/Ω_c	$\phi_c P_n$	P_n/Ω_c	$\phi_c P_n$	P_n/Ω_c	$\phi_c P_n$
		ASD	LRFD	ASD	LRFD	ASD	LRFD	ASD	LRFD	ASD	LRFD	ASD	LRFD
Effective length, KL (ft), with respect to least radius of gyration, r_y	0	3740	5620	3500	5260	3260	4900	3020	4540	2740	4110	2490	3750
	11	3500	5260	3270	4920	3040	4570	2820	4230	2550	3830	2320	3480
	12	3450	5190	3230	4850	3000	4510	2780	4180	2510	3770	2290	3440
	13	3410	5120	3180	4780	2960	4450	2740	4120	2470	3720	2250	3380
	14	3350	5040	3130	4710	2910	4380	2700	4050	2430	3660	2210	3330
	15	3300	4960	3080	4630	2870	4310	2650	3980	2390	3600	2180	3270
	16	3240	4870	3030	4550	2810	4230	2600	3910	2350	3530	2140	3210
	17	3180	4790	2970	4470	2760	4150	2550	3840	2300	3460	2090	3150
	18	3120	4690	2920	4380	2710	4070	2500	3760	2260	3390	2050	3080
	19	3060	4600	2850	4290	2650	3980	2450	3680	2210	3320	2000	3010
	20	2990	4500	2790	4200	2590	3890	2390	3600	2160	3240	1960	2940
	22	2860	4290	2660	4000	2470	3710	2280	3420	2050	3080	1860	2800
	24	2710	4080	2530	3800	2340	3520	2160	3240	1940	2920	1760	2640
	26	2560	3850	2390	3590	2210	3320	2040	3060	1830	2750	1660	2490
	28	2410	3630	2250	3380	2080	3120	1910	2870	1710	2580	1550	2330
	30	2260	3400	2100	3160	1940	2920	1790	2680	1600	2400	1450	2170
	32	2110	3170	1960	2950	1810	2720	1660	2500	1490	2230	1340	2020
	34	1960	2950	1820	2730	1670	2520	1540	2310	1370	2060	1240	1860
	36	1810	2730	1680	2530	1540	2320	1420	2130	1260	1900	1140	1710
	38	1670	2510	1550	2320	1420	2130	1300	1950	1160	1740	1040	1560
	40	1530	2300	1410	2130	1300	1950	1180	1780	1050	1580	945	1420
	42	1390	2090	1290	1930	1180	1770	1070	1610	954	1430	857	1290
	44	1270	1910	1170	1760	1070	1610	979	1470	869	1310	781	1170
	46	1160	1750	1070	1610	980	1470	896	1350	795	1200	715	1070
	48	1070	1600	985	1480	900	1350	823	1240	730	1100	656	986
	50	983	1480	907	1360	830	1250	758	1140	673	1010	605	909
Properties													
P_{wo}, kips		1140	1710	1010	1520	902	1350	788	1180	672	1010	574	861
P_{wi}, kips/in.		62.7	94.0	59.0	88.5	55.3	83.0	51.3	77.0	47.0	70.5	43.0	64.5
P_{wb}, kips		10100	15100	8420	12700	6920	10400	5540	8320	4250	6390	3260	4900
P_{fb}, kips		1730	2600	1520	2280	1320	1990	1140	1720	956	1440	802	1210
L_p, ft		15.3		15.2		15.1		15.0		14.8		14.7	
L_r, ft		168		158		148		138		125		114	
A_g, in.^{2}		125		117		109		101		91.4		83.3	
I_x, in.^{4}		6600		6000		5440		4900		4330		3840	
I_y, in.^{4}		2360		2170		1990		1810		1610		1440	
r_y, in.		4.34		4.31		4.27		4.24		4.20		4.17	
r_x/r_y		1.67		1.66		1.66		1.65		1.64		1.63	
$P_{ex}(KL)^2/10^6$, k-in.^{2}		189000		172000		156000		140000		124000		110000	
$P_{ey}(KL)^2/10^6$, k-in.^{2}		67500		62100		57000		51800		46100		41200	

ASD	LRFD
Ω_c = 1.67	ϕ_c = 0.90

[h] Flange thickness is greater than 2 in. Special requirements may apply per AISC *Specification* Section A3.1c.

W14

Table 4-1 (continued)
Available Strength in Axial Compression, kips
W-Shapes

F_y = 50 ksi

Shape		W14×											
lb/ft		257		233		211		193		176		159	
Design		P_n/Ω_c ASD	$\phi_c P_n$ LRFD	P_n/Ω_c ASD	$\phi_c P_n$ LRFD	P_n/Ω_c ASD	$\phi_c P_n$ LRFD	P_n/Ω_c ASD	$\phi_c P_n$ LRFD	P_n/Ω_c ASD	$\phi_c P_n$ LRFD	P_n/Ω_c ASD	$\phi_c P_n$ LRFD
Effective length, KL (ft), with respect to least radius of gyration, r_y	0	2260	3400	2050	3080	1860	2790	1700	2560	1550	2330	1400	2100
	6	2210	3330	2010	3010	1810	2730	1660	2500	1510	2280	1370	2050
	7	2200	3300	1990	2990	1800	2700	1650	2480	1500	2260	1350	2030
	8	2180	3270	1970	2960	1780	2680	1630	2450	1490	2240	1340	2010
	9	2150	3240	1950	2930	1760	2650	1610	2430	1470	2210	1330	1990
	10	2130	3200	1930	2900	1740	2620	1590	2400	1450	2180	1310	1970
	11	2100	3160	1900	2860	1720	2580	1570	2360	1430	2150	1290	1940
	12	2070	3110	1870	2820	1690	2550	1550	2330	1410	2120	1270	1910
	13	2040	3060	1840	2770	1670	2510	1530	2290	1390	2090	1250	1880
	14	2010	3010	1810	2730	1640	2460	1500	2250	1360	2050	1230	1850
	15	1970	2960	1780	2680	1610	2420	1470	2210	1340	2010	1210	1810
	16	1930	2900	1750	2630	1580	2370	1440	2170	1310	1970	1180	1780
	17	1890	2850	1710	2570	1540	2320	1410	2120	1280	1930	1160	1740
	18	1850	2790	1670	2520	1510	2270	1380	2080	1260	1890	1130	1700
	19	1810	2720	1640	2460	1480	2220	1350	2030	1230	1840	1100	1660
	20	1770	2660	1600	2400	1440	2160	1320	1980	1200	1800	1070	1620
	22	1680	2520	1510	2280	1360	2050	1250	1870	1130	1700	1020	1530
	24	1590	2380	1430	2150	1290	1930	1170	1770	1070	1600	957	1440
	26	1490	2240	1340	2020	1210	1820	1100	1660	998	1500	896	1350
	28	1400	2100	1260	1890	1130	1700	1030	1550	931	1400	835	1250
	30	1300	1950	1170	1750	1050	1570	954	1430	863	1300	773	1160
	32	1200	1810	1080	1620	968	1460	881	1320	796	1200	713	1070
	34	1110	1670	994	1490	890	1340	810	1220	730	1100	653	982
	36	1020	1530	911	1370	815	1220	740	1110	667	1000	596	896
	38	928	1400	830	1250	741	1110	673	1010	605	909	540	812
	40	841	1260	751	1130	670	1010	608	914	546	821	487	733
Properties													
P_{wo}, kips		490	735	414	621	353	529	303	454	264	396	222	333
P_{wi}, kips/in.		39.3	59.0	35.7	53.5	32.7	49.0	29.7	44.5	27.7	41.5	24.8	37.3
P_{wb}, kips		2480	3730	1850	2780	1430	2150	1070	1610	870	1310	628	944
P_{fb}, kips		668	1000	554	832	455	684	388	583	321	483	265	398
L_p, ft		14.6		14.5		14.4		14.3		14.2		14.1	
L_r, ft		104		95.0		86.6		79.4		73.2		66.7	
A_g, in.^{2}		75.6		68.5		62.0		56.8		51.8		46.7	
I_x, in.^{4}		3400		3010		2660		2400		2140		1900	
I_y, in.^{4}		1290		1150		1030		931		838		748	
r_y, in.		4.13		4.10		4.07		4.05		4.02		4.00	
r_x/r_y		1.62		1.62		1.61		1.60		1.60		1.60	
$P_{ex}(KL)^2/10^4$, k-in.^{2}		97300		86200		76100		68700		61300		54400	
$P_{ey}(KL)^2/10^4$, k-in.^{2}		36900		32900		29500		26600		24000		21400	

ASD	LRFD
Ω_c = 1.67	ϕ_c = 0.90

Table 4-1 (continued)

Available Strength in Axial Compression, kips

W-Shapes

F_y = 50 ksi

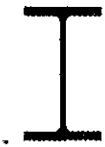

W14

Shape		W14×											
lb/ft		145		132		120		109		99		90	
Design		P_n/Ω_c ASD	$\phi_c P_n$ LRFD	P_n/Ω_c ASD	$\phi_c P_n$ LRFD	P_n/Ω_c ASD	$\phi_c P_n$ LRFD	P_n/Ω_c ASD	$\phi_c P_n$ LRFD	P_n/Ω_c ASD	$\phi_c P_n$ LRFD	P_n/Ω_c ASD	$\phi_c P_n$ LRFD
Effective length, KL (ft), with respect to least radius of gyration, r_y	0	1280	1920	1160	1750	1060	1590	958	1440	871	1310	793	1190
	6	1250	1880	1130	1700	1030	1550	932	1400	848	1270	772	1160
	7	1240	1860	1120	1680	1020	1530	923	1390	839	1260	764	1150
	8	1230	1840	1110	1660	1010	1510	913	1370	830	1250	755	1140
	9	1210	1820	1090	1640	994	1490	901	1350	819	1230	745	1120
	10	1200	1800	1080	1620	980	1470	888	1340	807	1210	735	1100
	11	1180	1770	1060	1600	965	1450	874	1310	794	1190	723	1090
	12	1160	1750	1040	1570	948	1430	859	1290	780	1170	710	1070
	13	1140	1720	1020	1540	931	1400	843	1270	766	1150	697	1050
	14	1120	1690	1000	1510	912	1370	826	1240	750	1130	682	1030
	15	1100	1650	982	1480	892	1340	808	1210	733	1100	667	1000
	16	1080	1620	960	1440	872	1310	789	1190	716	1080	652	979
	17	1060	1590	937	1410	850	1280	770	1160	698	1050	635	955
	18	1030	1550	913	1370	828	1240	750	1130	680	1020	618	929
	19	1010	1510	888	1330	805	1210	729	1100	661	994	601	903
	20	980	1470	862	1300	782	1180	708	1060	642	964	583	877
	22	927	1390	810	1220	734	1100	664	998	602	904	547	822
	24	872	1310	756	1140	685	1030	620	931	561	843	509	766
	26	816	1230	702	1060	635	955	574	863	519	781	472	709
	28	759	1140	648	974	586	880	529	796	478	719	434	653
	30	703	1060	594	893	537	807	485	729	438	658	397	597
	32	647	973	542	814	489	735	441	663	398	598	361	543
	34	593	891	491	738	443	665	399	600	360	541	326	490
	36	540	812	442	664	398	598	359	539	323	485	292	439
	38	489	735	397	596	357	536	322	484	290	435	262	394
	40	441	663	358	538	322	484	290	437	261	393	237	356
Properties													
P_{wo}, kips		192	287	175	263	151	227	128	192	112	167	96.1	144
P_{wi}, kips/in.		22.7	34.0	21.5	32.3	19.7	29.5	17.5	26.3	16.2	24.3	14.7	22.0
P_{wb}, kips		476	716	407	611	312	469	220	330	173	260	129	194
P_{fb}, kips		222	334	199	298	165	249	138	208	114	171	94.3	142
L_p, ft		14.1		13.3		13.2		13.2		13.5		15.1	
L_r, ft		61.7		55.8		51.9		48.5		45.3		42.5	
A_g, in.^{2}		42.7		38.8		35.3		32.0		29.1		26.5	
I_x, in.^{4}		1710		1530		1380		1240		1110		999	
I_y, in.^{4}		677		548		495		447		402		362	
r_y, in.		3.98		3.76		3.74		3.73		3.71		3.70	
r_x/r_y		1.59		1.67		1.67		1.67		1.66		1.66	
$P_{ex}(KL)^2/10^4$, k-in.^{2}		48900		43800		39500		35500		31800		28600	
$P_{ey}(KL)^2/10^4$, k-in.^{2}		19400		15700		14200		12800		11500		10400	

ASD	LRFD
Ω_c = 1.67	ϕ_c = 0.90

W14

Table 4-1 (continued)
Available Strength in Axial Compression, kips
W-Shapes

F_y = 50 ksi

Shape		W14×													
lb/ft		82		74		68		61		53		48		43[c]	
Design		P_n/Ω_c ASD	$\phi_c P_n$ LRFD	P_n/Ω_c ASD	$\phi_c P_n$ LRFD	P_n/Ω_c ASD	$\phi_c P_n$ LRFD	P_n/Ω_c ASD	$\phi_c P_n$ LRFD	P_n/Ω_c ASD	$\phi_c P_n$ LRFD	P_n/Ω_c ASD	$\phi_c P_n$ LRFD	P_n/Ω_c ASD	$\phi_c P_n$ LRFD
Effective length, KL (ft), with respect to least radius of gyration, r_y	0	719	1080	653	981	599	900	536	805	467	702	422	634	374	562
	6	676	1020	614	922	562	845	503	756	421	633	380	572	339	510
	7	661	993	600	902	550	826	492	739	406	610	366	551	327	491
	8	644	968	585	879	536	805	479	720	389	585	351	527	312	470
	9	626	940	568	854	520	782	465	699	371	557	334	502	297	447
	10	606	910	550	827	503	756	450	676	351	528	316	475	281	422
	11	584	878	531	797	485	729	433	651	331	497	298	447	264	397
	12	562	844	510	767	466	701	416	626	310	465	279	419	247	371
	13	538	809	489	735	446	671	398	599	288	433	259	390	229	345
	14	514	772	467	701	426	640	380	571	267	401	240	360	212	318
	15	489	735	444	667	405	608	361	543	246	369	221	331	194	292
	16	464	697	421	633	384	577	342	514	225	338	202	303	177	267
	17	438	659	398	598	362	544	323	485	205	308	183	276	161	242
	18	413	620	375	563	341	512	304	456	185	278	166	249	145	218
	19	387	582	352	529	320	480	285	428	166	250	149	224	130	196
	20	362	545	329	495	299	449	266	399	150	226	134	202	117	177
	22	314	472	285	428	258	388	229	345	124	186	111	167	97.1	146
	24	267	402	243	365	219	330	195	293	104	157	93.2	140	81.6	123
	26	228	343	207	311	187	281	166	249	88.8	133	79.4	119	69.5	104
	28	197	295	179	268	161	242	143	215	76.6	115	68.5	103	59.9	90.1
	30	171	257	156	234	140	211	125	187	66.7	100	59.7	89.7	52.2	78.5
	32	150	226	137	205	123	185	110	165	58.6	88.1				
	34	133	200	121	182	109	164	97.0	146						
	36	119	179	108	162	97.5	147	86.5	130						
	38	107	160	96.9	146	87.5	131	77.7	117						
	40	96.3	145	87.5	131	79.0	119	70.1	105						
Properties															
P_{wo}, kips		123	185	104	155	90.6	136	77.5	116	77.1	116	67.4	101	56.9	85.4
P_{wi}, kips/in.		17.0	25.5	15.0	22.5	13.8	20.8	12.5	18.8	12.3	18.5	11.3	17.0	10.2	15.3
P_{wb}, kips		201	302	138	207	108	163	80.1	120	76.7	115	59.5	89.5	43.0	64.7
P_{fb}, kips		137	206	115	173	97.0	146	77.8	117	81.5	123	66.2	99.6	52.6	79.0
L_p, ft		8.76		8.76		8.69		8.65		6.78		6.75		6.68	
L_r, ft		33.2		31.0		29.3		27.5		22.3		21.1		20.0	
A_g, in.^{2}		24.0		21.8		20.0		17.9		15.6		14.1		12.6	
I_x, in.^{4}		881		795		722		640		541		484		428	
I_y, in.^{4}		148		134		121		107		57.7		51.4		45.2	
r_y, in.		2.48		2.48		2.46		2.45		1.92		1.91		1.89	
r_x/r_y		2.44		2.44		2.44		2.44		3.07		3.06		3.08	
$P_{ex}(KL)^2/10^4$, k-in.^{2}		25200		22800		20700		18300		15500		13900		12300	
$P_{ey}(KL)^2/10^4$, k-in.^{2}		4240		3840		3460		3060		1650		1470		1290	

ASD	LRFD
$\Omega_c = 1.67$	$\phi_c = 0.90$

[c] Shape is slender for compression with F_y = 50 ksi.
Note: Heavy line indicates KL/r_y equal to or greater than 200.

Table 4-1 (continued)
Available Strength in Axial Compression, kips
W-Shapes

F_y = 50 ksi

W12

Shape		W12×											
lb/ft		336[h]		305[h]		279[h]		252[h]		230[h]		210	
Design		P_n/Ω_c ASD	$\phi_c P_n$ LRFD	P_n/Ω_c ASD	$\phi_c P_n$ LRFD	P_n/Ω_c ASD	$\phi_c P_n$ LRFD	P_n/Ω_c ASD	$\phi_c P_n$ LRFD	P_n/Ω_c ASD	$\phi_c P_n$ LRFD	P_n/Ω_c ASD	$\phi_c P_n$ LRFD
Effective length, KL (ft), with respect to least radius of gyration, r_y	0	2960	4450	2680	4030	2450	3690	2220	3330	2030	3050	1850	2780
	6	2870	4310	2590	3900	2370	3570	2140	3220	1960	2940	1790	2680
	7	2840	4260	2566	3850	2340	3520	2120	3180	1930	2910	1760	2650
	8	2800	4210	2530	3800	2310	3470	2090	3140	1910	2860	1740	2610
	9	2760	4150	2490	3740	2280	3420	2060	3090	1880	2820	1710	2570
	10	2710	4080	2450	3680	2240	3360	2020	3030	1840	2770	1680	2520
	11	2660	4000	2400	3610	2190	3300	1980	2970	1800	2710	1640	2470
	12	2610	3920	2350	3540	2150	3230	1940	2910	1760	2650	1610	2420
	13	2550	3840	2300	3460	2100	3150	1890	2840	1720	2590	1570	2360
	14	2490	3750	2250	3380	2050	3080	1840	2770	1680	2520	1530	2300
	15	2430	3660	2190	3290	1990	3000	1790	2700	1630	2450	1480	2230
	16	2370	3560	2130	3200	1940	2910	1740	2620	1580	2380	1440	2160
	17	2300	3460	2070	3100	1880	2820	1690	2540	1540	2310	1390	2100
	18	2230	3350	2000	3010	1820	2730	1630	2460	1480	2230	1350	2030
	19	2160	3250	1940	2910	1760	2640	1580	2370	1430	2150	1300	1950
	20	2090	3140	1870	2810	1700	2550	1520	2290	1380	2070	1250	1880
	22	1940	2910	1730	2610	1570	2360	1410	2110	1270	1910	1150	1730
	24	1790	2690	1600	2400	1440	2170	1290	1940	1170	1750	1050	1580
	26	1640	2460	1460	2190	1320	1980	1170	1760	1060	1590	955	1440
	28	1490	2240	1320	1990	1190	1790	1060	1590	954	1430	859	1290
	30	1350	2030	1190	1790	1070	1610	949	1430	854	1280	767	1150
	32	1210	1820	1070	1600	954	1430	843	1270	756	1140	678	1020
	34	1080	1620	945	1420	845	1270	746	1120	670	1010	600	902
	36	959	1440	843	1270	754	1130	666	1000	597	898	535	805
	38	861	1290	757	1140	676	1020	598	898	536	806	481	722
	40	777	1170	683	1030	610	917	539	811	484	727	434	652
Properties													
P_{wo}, kips		1050	1580	897	1340	783	1170	665	998	574	861	492	738
P_{wi}, kips/in.		59.3	89.0	54.3	81.5	51.0	76.5	46.7	70.0	43.0	64.5	39.3	59.0
P_{wb}, kips		10000	15100	7690	11600	6380	9590	4870	7320	3810	5730	2930	4400
P_{fb}, kips		1640	2460	1370	2070	1140	1720	947	1420	802	1210	676	1020
L_p, ft		12.3		12.1		11.9		11.8		11.7		11.6	
L_r, ft		150		137		126		114		105		95.8	
A_g, in.^{2}		98.9		89.5		81.9		74.1		67.7		61.8	
I_x, in.^{4}		4060		3550		3110		2720		2420		2140	
I_y, in.^{4}		1190		1050		937		828		742		664	
r_y, in.		3.47		3.42		3.38		3.34		3.31		3.28	
r_x/r_y		1.85		1.84		1.82		1.81		1.80		1.80	
$P_{ex}(KL)^2/10^4$, k-in.^{2}		116000		102000		89000		77900		69300		61300	
$P_{ey}(KL)^2/10^4$, k-in.^{2}		34100		30100		26800		23700		21200		19000	

ASD	LRFD
Ω_c = 1.67	ϕ_c = 0.90

[h] Flange thickness is greater than 2 in. Special requirements may apply per AISC *Specification* Section A3.1c.

W12

Table 4-1 (continued)
Available Strength in Axial Compression, kips
W-Shapes

F_y = 50 ksi

Shape		W12×											
lb/ft		190		170		152		136		120		106	
Design		P_n/Ω_c ASD	$\phi_c P_n$ LRFD	P_n/Ω_c ASD	$\phi_c P_n$ LRFD	P_n/Ω_c ASD	$\phi_c P_n$ LRFD	P_n/Ω_c ASD	$\phi_c P_n$ LRFD	P_n/Ω_c ASD	$\phi_c P_n$ LRFD	P_n/Ω_c ASD	$\phi_c P_n$ LRFD
Effective length, KL (ft), with respect to least radius of gyration, r_y	0	1680	2520	1500	2250	1340	2010	1190	1800	1050	1580	934	1400
	6	1620	2430	1440	2170	1290	1940	1150	1730	1010	1520	898	1350
	7	1600	2400	1420	2140	1270	1910	1130	1710	1000	1500	886	1330
	8	1570	2360	1400	2110	1250	1880	1120	1680	984	1480	871	1310
	9	1550	2320	1380	2070	1230	1850	1100	1650	966	1450	855	1290
	10	1520	2280	1350	2030	1210	1810	1080	1620	947	1420	838	1260
	11	1490	2230	1320	1990	1180	1770	1050	1580	925	1390	819	1230
	12	1450	2180	1290	1940	1150	1730	1030	1540	903	1360	799	1200
	13	1420	2130	1260	1900	1120	1690	1000	1500	879	1320	774	1170
	14	1380	2070	1230	1840	1090	1640	972	1460	854	1280	755	1130
	15	1340	2010	1190	1790	1060	1590	942	1420	828	1240	731	1100
	16	1300	1950	1150	1730	1030	1540	912	1370	800	1200	707	1060
	17	1260	1890	1120	1680	992	1490	881	1320	773	1160	682	1030
	18	1210	1820	1080	1620	957	1440	849	1280	744	1120	656	987
	19	1170	1760	1040	1560	921	1380	816	1230	715	1070	631	948
	20	1130	1690	997	1500	885	1330	784	1180	686	1030	604	908
	22	1050	1560	916	1380	811	1220	717	1080	626	942	552	829
	24	944	1420	834	1250	737	1110	651	978	567	853	499	750
	26	855	1280	754	1130	665	999	586	880	510	766	448	673
	28	767	1150	675	1010	595	894	523	786	454	682	398	598
	30	684	1030	600	902	527	793	462	695	400	601	350	526
	32	603	906	528	794	464	697	406	610	352	528	308	462
	34	534	803	468	704	411	617	360	541	311	468	272	410
	36	476	716	418	628	366	551	321	482	278	417	243	365
	38	428	643	375	563	329	494	288	433	249	375	218	328
	40	386	580	338	508	297	446	260	391	225	338	197	296
Properties													
P_{wa}, kips		412	617	346	518	290	435	244	365	201	302	162	242
P_{wi}, kips/in.		35.3	53.0	32.0	48.0	29.0	43.5	26.3	39.5	23.7	35.5	20.3	30.5
P_{wb}, kips		2120	3190	1580	2370	1170	1760	878	1320	637	957	405	609
P_{fb}, kips		567	852	455	684	367	551	292	439	231	347	183	276
L_p, ft		11.5		11.4		11.3		11.2		11.1		11.0	
L_r, ft		87.3		78.5		70.6		63.2		56.5		50.7	
A_g, in.^{2}		56.0		50.0		44.7		39.9		35.2		31.2	
I_x, in.^{4}		1890		1650		1430		1240		1070		933	
I_y, in.^{4}		589		517		454		398		345		301	
r_y, in.		3.25		3.22		3.19		3.16		3.13		3.11	
r_x/r_y		1.79		1.78		1.77		1.77		1.76		1.76	
$P_{ex}(KL)^2/10^4$, k-in.^{2}		54100		47200		40900		35500		30600		26700	
$P_{ey}(KL)^2/10^4$, k-in.^{2}		16900		14800		13000		11400		9870		8620	

ASD	LRFD
$\Omega_c = 1.67$	$\phi_c = 0.90$

Table 4-1 (continued)
Available Strength in Axial Compression, kips
W-Shapes

F_y = 50 ksi

W12

Shape		W12×									
lb/ft		96		87		79		72		65	
Design		P_n/Ω_c ASD	$\phi_c P_n$ LRFD	P_n/Ω_c ASD	$\phi_c P_n$ LRFD	P_n/Ω_c ASD	$\phi_c P_n$ LRFD	P_n/Ω_c ASD	$\phi_c P_n$ LRFD	P_n/Ω_c ASD	$\phi_c P_n$ LRFD
Effective length, KL (ft), with respect to least radius of gyration, r_y	0	844	1270	766	1150	695	1040	632	949	572	859
	6	811	1220	736	1110	667	1000	606	911	549	825
	7	800	1200	726	1090	657	988	597	898	540	812
	8	787	1180	714	1070	646	971	587	883	531	798
	9	772	1160	700	1050	634	953	576	866	521	783
	10	756	1140	685	1030	620	932	564	847	510	766
	11	739	1110	670	1010	606	910	550	827	497	747
	12	720	1080	653	981	590	887	536	806	484	728
	13	701	1050	635	954	574	862	521	783	470	707
	14	680	1020	616	925	556	836	505	759	456	685
	15	659	990	596	896	538	809	489	735	441	663
	16	637	957	576	865	520	781	472	709	426	640
	17	614	923	555	834	501	753	455	683	410	616
	18	591	888	534	802	481	723	437	656	393	591
	19	567	852	512	770	462	694	419	629	377	567
	20	543	816	490	737	442	664	401	602	360	542
	22	495	744	446	671	402	604	364	547	327	492
	24	447	672	403	605	362	544	328	493	294	442
	26	401	602	360	541	323	486	292	440	262	394
	28	356	535	319	480	286	430	259	389	231	348
	30	312	469	280	421	250	376	226	340	202	304
	32	274	413	246	370	220	331	199	299	178	267
	34	243	365	218	327	195	293	176	265	157	236
	36	217	326	194	292	174	261	157	236	140	211
	38	195	293	174	262	156	234	141	212	126	189
	40	176	264	157	237	141	212	127	191	114	171
Properties											
P_{wo}, kips		138	206	121	182	104	156	91.0	137	78.0	117
P_{wi}, kips/in.		18.3	27.5	17.2	25.8	15.7	23.5	14.3	21.5	13.0	19.5
P_{wb}, kips		296	445	243	365	185	278	142	213	106	159
P_{fb}, kips		152	228	123	185	101	152	84.0	126	68.5	103
L_p, ft		10.9		10.8		10.8		10.7		11.9	
L_r, ft		46.7		43.1		39.9		37.5		35.1	
A_g, in.^{2}		28.2		25.6		23.2		21.1		19.1	
I_x, in.^{4}		833		740		662		597		533	
I_y, in.^{4}		270		241		216		195		174	
r_y, in.		3.09		3.07		3.05		3.04		3.02	
r_x/r_y		1.76		1.75		1.75		1.75		1.75	
$P_{ex}(KL)^2/10^4$, k-in.^{2}		23800		21200		18900		17100		15300	
$P_{ey}(KL)^2/10^4$, k-in.^{2}		7730		6900		6180		5580		4980	

ASD	LRFD
$\Omega_c = 1.67$	$\phi_c = 0.90$

W12

Table 4-1 (continued)
Available Strength in Axial Compression, kips
W-Shapes

F_y = 50 ksi

Shape		W12×									
lb/ft		58		53		50		45		40	
Design		P_n/Ω_c ASD	$\phi_c P_n$ LRFD	P_n/Ω_c ASD	$\phi_c P_n$ LRFD	P_n/Ω_c ASD	$\phi_c P_n$ LRFD	P_n/Ω_c ASD	$\phi_c P_n$ LRFD	P_n/Ω_c ASD	$\phi_c P_n$ LRFD
Effective length, KL (ft), with respect to least radius of gyration, r_y	0	509	765	467	702	437	657	392	589	350	526
	6	479	720	439	660	396	595	355	534	317	476
	7	469	705	429	646	382	574	342	515	305	459
	8	457	687	419	629	367	551	329	494	293	440
	9	445	668	407	611	350	526	313	471	279	420
	10	431	647	394	592	332	500	297	447	265	398
	11	416	625	380	571	314	472	281	422	250	375
	12	400	601	365	549	295	443	263	396	234	352
	13	384	577	350	526	275	413	246	369	218	328
	14	367	551	334	502	255	384	228	343	202	304
	15	349	525	318	478	236	355	210	316	187	281
	16	332	499	301	453	217	326	193	290	171	257
	17	314	472	285	428	198	298	176	265	156	235
	18	296	445	268	403	180	270	160	240	142	213
	19	278	418	252	378	162	244	144	216	127	191
	20	261	392	235	354	146	220	130	195	115	173
	22	227	341	204	307	121	182	107	161	95.0	143
	24	194	292	174	261	102	153	90.3	136	79.8	120
	26	165	249	148	223	86.6	130	76.9	116	68.0	102
	28	143	214	128	192	74.7	112	66.3	99.7	58.6	88.1
	30	124	187	111	167	65.0	97.8	57.8	86.8	51.1	76.8
	32	109	164	97.8	147	57.2	85.9	50.8	76.3	44.9	67.5
	34	96.7	145	86.6	130						
	36	86.3	130	77.3	116						
	38	77.4	116	69.4	104						
	40	69.9	105	62.6	94.1						
Properties											
P_{wo}, kips		74.4	112	67.9	102	70.3	105	60.3	90.5	50.2	75.2
P_{wi}, kips/in.		12.0	18.0	11.5	17.3	12.3	18.5	11.2	16.8	9.83	14.8
P_{wb}, kips		83.1	125	73.3	110	88.4	133	65.6	98.6	44.8	67.4
P_{fb}, kips		76.6	115	61.9	93.0	76.6	115	61.9	93.0	49.6	74.6
L_p, ft		8.87		8.76		6.92		6.89		6.85	
L_r, ft		29.8		28.2		23.8		22.4		21.1	
A_g, in.^{2}		17.0		15.6		14.6		13.1		11.7	
I_x, in.^{4}		475		425		391		348		307	
I_y, in.^{4}		107		95.8		56.3		50.0		44.1	
r_y, in.		2.51		2.48		1.96		1.95		1.94	
r_x/r_y		2.10		2.11		2.64		2.64		2.64	
$P_{ex}(KL)^2/10^4$, k-in.^{2}		13600		12200		11200		9960		8790	
$P_{ey}(KL)^2/10^4$, k-in.^{2}		3060		2740		1610		1430		1260	
ASD		LRFD		Note: Heavy line indicates KL/r_y equal to or greater than 200.							
Ω_c = 1.67		ϕ_c = 0.90									

Table 4-1 (continued)

Available Strength in Axial Compression, kips

W-Shapes

F_y = 50 ksi

W10

Shape		W10×											
lb/ft		112		100		88		77		68		60	
Design		P_n/Ω_c ASD	$\phi_c P_n$ LRFD	P_n/Ω_c ASD	$\phi_c P_n$ LRFD	P_n/Ω_c ASD	$\phi_c P_n$ LRFD	P_n/Ω_c ASD	$\phi_c P_n$ LRFD	P_n/Ω_c ASD	$\phi_c P_n$ LRFD	P_n/Ω_c ASD	$\phi_c P_n$ LRFD
Effective length, KL (ft), with respect to least radius of gyration, r_y	0	985	1480	877	1320	778	1170	680	1020	596	895	530	796
	6	934	1400	831	1250	737	1110	643	966	563	846	500	752
	7	917	1380	815	1230	722	1090	630	946	552	829	490	737
	8	897	1350	797	1200	706	1060	615	925	539	810	479	719
	9	875	1310	777	1170	688	1030	599	900	525	789	466	700
	10	851	1280	755	1130	669	1000	582	874	509	765	452	679
	11	825	1240	732	1100	647	973	563	846	493	741	437	657
	12	798	1200	707	1060	625	940	543	816	475	714	421	633
	13	769	1160	681	1020	602	905	522	785	457	687	405	608
	14	739	1110	654	983	578	868	501	753	438	658	388	583
	15	708	1060	626	941	553	831	479	720	419	629	370	556
	16	677	1020	598	898	527	792	456	686	399	599	352	530
	17	645	969	569	855	501	754	433	651	379	569	334	502
	18	613	921	540	811	475	714	410	617	358	539	316	475
	19	580	872	511	767	449	675	387	582	338	508	298	448
	20	548	824	482	724	423	636	365	548	318	478	280	421
	22	485	728	425	638	373	560	320	481	279	419	245	368
	24	423	636	370	556	324	487	277	417	241	363	212	318
	26	365	548	318	478	278	417	237	356	206	310	181	271
	28	315	473	274	412	239	360	204	307	178	267	156	234
	30	274	412	239	359	209	313	178	267	155	233	136	204
	32	241	362	210	315	183	276	156	235	136	205	119	179
	34	213	321	186	279	162	244	139	208	121	181	106	159
	36	190	286	166	249	145	218	124	186	108	162	94.2	142
	38	171	257	149	224	130	195	111	167	96.5	145	84.5	127
	40	154	232	134	202	117	176	100	150	87.1	131	76.3	115
Properties													
P_{wo}, kips		220	330	184	275	150	225	121	182	99.5	149	82.6	124
P_{wi}, kips/in.		25.2	37.8	22.7	34.0	20.2	30.3	17.7	26.5	15.7	23.5	14.0	21.0
P_{wb}, kips		949	1430	690	1040	487	732	328	494	229	344	163	245
P_{fb}, kips		292	439	235	353	183	276	142	213	111	167	86.5	130
L_p, ft		9.47		9.36		9.29		9.18		9.15		9.08	
L_r, ft		64.1		57.9		51.2		45.3		40.6		36.6	
A_g, in.^{2}		32.9		29.3		26.0		22.7		19.9		17.7	
I_x, in.^{4}		716		623		534		455		394		341	
I_y, in.^{4}		236		207		179		154		134		116	
r_y, in.		2.68		2.65		2.63		2.60		2.59		2.57	
r_x/r_y		1.74		1.74		1.73		1.73		1.71		1.71	
$P_{ex}(KL)^2/10^4$, k-in.^{2}		20500		17800		15300		13000		11300		9760	
$P_{ey}(KL)^2/10^4$, k-in.^{2}		6750		5920		5120		4410		3840		3320	

ASD	LRFD
Ω_c = 1.67	ϕ_c = 0.90

W10

Table 4-1 (continued)
Available Strength in Axial Compression, kips
W-Shapes

F_y = 50 ksi

Shape		W10×									
lb/ft		54		49		45		39		33	
Design		P_n/Ω_c ASD	$\phi_c P_n$ LRFD	P_n/Ω_c ASD	$\phi_c P_n$ LRFD	P_n/Ω_c ASD	$\phi_c P_n$ LRFD	P_n/Ω_c ASD	$\phi_c P_n$ LRFD	P_n/Ω_c ASD	$\phi_c P_n$ LRFD
Effective length, KL (ft), with respect to least radius of gyration, r_y	0	473	711	431	648	398	598	344	517	291	437
	6	446	671	407	611	363	545	313	470	263	395
	7	437	657	398	598	350	527	302	454	253	381
	8	427	642	388	584	337	507	290	436	243	365
	9	415	624	378	568	322	485	277	416	232	348
	10	403	605	366	550	307	461	263	396	220	330
	11	389	585	354	532	291	437	249	374	207	311
	12	375	564	341	512	274	411	234	352	194	292
	13	361	542	327	492	256	385	219	329	181	272
	14	345	519	313	471	239	359	203	306	168	253
	15	330	495	299	449	222	333	188	283	155	233
	16	314	471	284	427	204	307	173	260	142	214
	17	297	447	269	404	188	282	158	238	130	195
	18	281	422	254	382	171	257	144	217	117	177
	19	265	398	239	360	155	234	130	196	106	159
	20	249	374	224	337	140	211	118	177	95.4	143
	22	217	327	196	294	116	174	97.2	146	78.8	118
	24	188	282	168	253	97.4	146	81.7	123	66.2	99.5
	26	160	240	143	216	83.0	125	69.5	105	56.4	84.8
	28	138	207	124	186	71.5	108	60.0	90.2	48.7	73.1
	30	120	180	108	162	62.3	93.7	52.3	78.6	42.4	63.7
	32	106	159	94.7	142	54.8	82.3	46.0	69.1	37.3	56.0
	34	93.5	141	83.9	126						
	36	83.4	125	74.8	112						
	38	74.8	112	67.2	101						
	40	67.6	102	60.6	91.1						
Properties											
P_{wo}, kips		69.1	104	60.1	90.1	65.3	98.0	54.1	81.1	45.2	67.8
P_{wi}, kips/in.		12.3	18.5	11.3	17.0	11.7	17.5	10.5	15.8	9.67	14.5
P_{wb}, kips		112	168	86.6	130	94.2	142	68.7	103	53.7	80.7
P_{fb}, kips		70.8	106	58.7	88.2	71.9	108	52.6	79.0	35.4	53.2
L_p, ft		9.04		8.97		7.10		6.99		6.85	
L_r, ft		33.6		31.6		26.9		24.2		21.8	
A_g, in.^{2}		15.8		14.4		13.3		11.5		9.71	
I_x, in.^{4}		303		272		248		209		171	
I_y, in.^{4}		103		93.4		53.4		45.0		36.6	
r_y, in.		2.56		2.54		2.01		1.98		1.94	
r_x/r_y		1.71		1.71		2.15		2.16		2.16	
$P_{ex}(KL)^2/10^4$, k-in.^{2}		8670		7790		7100		5980		4890	
$P_{ey}(KL)^2/10^4$, k-in.^{2}		2950		2670		1530		1290		1050	
ASD		LRFD		Note: Heavy line indicates KL/r_y equal to or greater than 200.							
Ω_c = 1.67		ϕ_c = 0.90									

Table 4-1 (continued)
Available Strength in Axial Compression, kips
W-Shapes

F_y = 50 ksi

Shape		W8×											
lb/ft		67		58		48		40		35		31	
Design		P_n/Ω_c ASD	$\phi_c P_n$ LRFD	P_n/Ω_c ASD	$\phi_c P_n$ LRFD	P_n/Ω_c ASD	$\phi_c P_n$ LRFD	P_n/Ω_c ASD	$\phi_c P_n$ LRFD	P_n/Ω_c ASD	$\phi_c P_n$ LRFD	P_n/Ω_c ASD	$\phi_c P_n$ LRFD
Effective length, KL (ft), with respect to least radius of gyration, r_y	0	590	886	512	769	422	634	350	526	308	463	273	411
	6	542	815	470	706	387	581	320	481	281	423	249	374
	7	526	790	455	685	375	563	309	465	272	409	241	362
	8	508	763	439	660	361	543	298	448	262	394	232	348
	9	488	733	422	634	347	521	285	429	251	377	222	333
	10	467	701	403	606	331	497	272	409	239	359	211	317
	11	444	668	384	576	314	473	258	388	226	340	200	301
	12	421	633	363	546	297	447	243	366	213	321	189	283
	13	397	597	342	514	280	421	228	343	200	301	177	266
	14	373	560	321	482	262	394	213	321	187	281	165	248
	15	348	523	299	450	244	367	198	298	174	261	153	230
	16	324	487	278	418	226	340	183	275	160	241	141	212
	17	300	450	257	386	209	314	169	253	147	221	130	195
	18	276	415	236	355	192	288	154	232	135	203	118	178
	19	253	381	216	325	175	264	141	211	123	184	108	162
	20	231	347	197	296	159	239	127	191	111	166	97.2	146
	22	191	287	163	244	132	198	105	158	91.5	138	80.3	121
	24	160	241	137	205	111	166	88.2	133	76.9	116	67.5	101
	26	137	205	116	175	94.2	142	75.2	113	65.5	98.5	57.5	86.5
	28	118	177	100	151	81.2	122	64.8	97.4	56.5	84.9	49.6	74.5
	30	103	154	87.5	131	70.7	106	56.5	84.9	49.2	74.0	43.2	64.9
	32	90.3	136	76.9	116	62.2	93.5	49.6	74.6	43.3	65.0	38.0	57.1
	34	79.9	120	68.1	102	55.1	82.8	44.0	66.1				
Properties													
P_{wa}, kips		126	190	102	153	72.0	108	57.2	85.9	45.9	68.9	39.4	59.1
P_{wi}, kips/in.		19.0	28.5	17.0	25.5	13.3	20.0	12.0	18.0	10.3	15.5	9.50	14.3
P_{wb}, kips		507	761	363	546	174	262	127	192	81.1	122	63.0	94.7
P_{fb}, kips		164	246	123	185	87.8	132	58.7	88.2	45.9	68.9	35.4	53.2
L_p, ft		7.49		7.42		7.35		7.21		7.17		7.18	
L_r, ft		47.6		41.6		35.2		29.9		27.0		24.8	
A_g, in.^{2}		19.7		17.1		14.1		11.7		10.3		9.13	
I_x, in.^{4}		272		228		184		146		127		110	
I_y, in.^{4}		88.6		75.1		60.9		49.1		42.6		37.1	
r_y, in.		2.12		2.10		2.08		2.04		2.03		2.02	
r_x/r_y		1.75		1.74		1.74		1.73		1.73		1.72	
$P_{ex}(KL)^2/10^4$, k-in.^{2}		7790		6530		5270		4180		3630		3150	
$P_{ey}(KL)^2/10^4$, k-in.^{2}		2540		2150		1740		1410		1220		1060	

ASD	LRFD
Ω_c = 1.67	ϕ_c = 0.90

Note: Heavy line indicates KL/r_y equal to or greater than 200.

HP18

Table 4-2
Available Strength in Axial Compression, kips
HP-Shapes

F_y = 50 ksi

Shape		HP18×							
lb/ft		204		181		157		135	
Design		P_n/Ω_c ASD	$\phi_c P_n$ LRFD	P_n/Ω_c ASD	$\phi_c P_n$ LRFD	P_n/Ω_c ASD	$\phi_c P_n$ LRFD	P_n/Ω_c ASD	$\phi_c P_n$ LRFD
Effective length, KL (ft), with respect to least radius of gyration, r_y	0	1800	2710	1590	2390	1380	2080	1190	1800
	6	1770	2650	1560	2340	1350	2040	1170	1760
	7	1750	2630	1550	2330	1340	2020	1160	1740
	8	1740	2610	1540	2310	1330	2000	1150	1730
	9	1720	2590	1520	2290	1320	1980	1140	1710
	10	1700	2560	1500	2260	1300	1960	1130	1690
	11	1680	2530	1490	2230	1290	1940	1110	1670
	12	1660	2500	1470	2200	1270	1910	1100	1650
	13	1640	2460	1450	2170	1250	1880	1080	1620
	14	1610	2420	1420	2140	1230	1850	1060	1600
	15	1590	2380	1400	2100	1210	1820	1050	1570
	16	1560	2340	1370	2070	1190	1790	1030	1540
	17	1530	2300	1350	2030	1170	1760	1010	1510
	18	1500	2250	1320	1990	1150	1720	985	1480
	19	1470	2210	1290	1950	1120	1680	964	1450
	20	1440	2160	1270	1900	1100	1650	942	1420
	22	1370	2060	1210	1810	1040	1570	896	1350
	24	1300	1950	1140	1720	989	1490	848	1280
	26	1230	1850	1080	1620	933	1400	800	1200
	28	1160	1740	1010	1530	876	1320	750	1130
	30	1080	1630	950	1430	819	1230	700	1050
	32	1010	1520	884	1330	761	1140	650	977
	34	936	1410	820	1230	705	1060	601	904
	36	865	1300	756	1140	650	977	553	831
	38	795	1190	695	1040	596	896	507	761
	40	728	1090	635	954	544	818	461	693
Properties									
P_{wo}, kips		435	653	363	545	297	446	241	362
P_{wl}, kips/in.		37.7	56.5	33.3	50.0	29.0	43.5	25.0	37.5
P_{wb}, kips		1830	2740	1270	1910	840	1260	535	804
P_{lb}, kips		239	359	187	281	142	213	105	158
L_p, ft		15.2		15.1		18.1		21.4	
L_r, ft		67.8		61.3		55.8		50.5	
A_g, in.^{2}		60.2		53.2		46.2		39.9	
I_x, in.^{4}		3480		3020		2570		2200	
I_y, in.^{4}		1120		974		833		706	
r_y, in.		4.31		4.28		4.25		4.21	
r_x/r_y		1.76		1.76		1.75		1.76	
$P_{ex}(KL)^2/10^4$, k-in.^{2}		99600		86400		73600		63000	
$P_{ey}(KL)^2/10^4$, k-in.^{2}		32100		27900		23800		20200	
ASD	LRFD								
$\Omega_c = 1.67$	$\phi_c = 0.90$								

Table 4-2 (continued)
Available Strength in Axial Compression, kips
HP-Shapes

F_y = 50 ksi

HP16

Shape		HP16×											
lb/ft		183		162		141		121		101		88[c]	
Design		P_n/Ω_c ASD	$\phi_c P_n$ LRFD	P_n/Ω_c ASD	$\phi_c P_n$ LRFD	P_n/Ω_c ASD	$\phi_c P_n$ LRFD	P_n/Ω_c ASD	$\phi_c P_n$ LRFD	P_n/Ω_c ASD	$\phi_c P_n$ LRFD	P_n/Ω_c ASD	$\phi_c P_n$ LRFD
Effective length, KL (ft), with respect to least radius of gyration, r_y	0	1610	2430	1430	2150	1250	1880	1070	1610	895	1350	749	1130
	6	1570	2360	1390	2090	1220	1830	1040	1570	871	1310	729	1100
	7	1560	2340	1380	2070	1200	1810	1030	1550	862	1300	722	1080
	8	1540	2320	1360	2050	1190	1790	1020	1540	852	1280	714	1070
	9	1520	2290	1350	2020	1180	1770	1010	1520	841	1260	705	1060
	10	1500	2260	1330	2000	1160	1740	995	1490	829	1250	694	1040
	11	1480	2230	1310	1970	1140	1720	979	1470	816	1230	684	1030
	12	1460	2190	1290	1930	1120	1690	962	1450	802	1210	672	1010
	13	1430	2150	1260	1900	1100	1660	944	1420	787	1180	659	991
	14	1410	2110	1240	1860	1080	1630	926	1390	771	1160	646	971
	15	1380	2070	1210	1820	1060	1590	906	1360	754	1130	632	950
	16	1350	2020	1190	1780	1030	1560	885	1330	736	1110	617	928
	17	1320	1980	1160	1740	1010	1520	863	1300	718	1080	602	905
	18	1280	1930	1130	1700	985	1480	841	1260	699	1050	587	882
	19	1250	1880	1100	1650	958	1440	818	1230	679	1020	570	857
	20	1220	1830	1070	1610	931	1400	794	1190	659	991	554	833
	22	1150	1720	1010	1510	876	1320	746	1120	618	929	520	782
	24	1070	1610	942	1420	819	1230	696	1050	576	866	485	729
	26	1000	1500	877	1320	761	1140	646	971	534	802	450	676
	28	927	1390	811	1220	703	1060	596	896	491	739	415	623
	30	854	1280	746	1120	645	970	546	821	450	676	380	571
	32	783	1180	682	1030	589	886	498	748	409	615	346	520
	34	713	1070	620	932	535	804	451	678	370	556	313	471
	36	646	971	561	843	482	725	405	609	331	498	281	423
	38	581	873	503	756	433	651	364	547	297	447	253	380
	40	524	787	454	682	391	587	328	494	268	404	228	343
Properties													
P_{wo}, kips		435	653	363	545	300	451	241	362	189	283	155	232
P_{wi}, kips/in.		37.7	56.5	33.3	50.0	29.2	43.8	25.0	37.5	20.8	31.3	18.0	27.0
P_{wb}, kips		2100	3160	1450	2190	974	1460	612	920	356	535	229	345
P_{fb}, kips		239	359	187	281	143	215	105	158	73.1	110	54.6	82.0
L_p, ft		13.6		13.5		13.4		16.7		20.2		22.9	
L_r, ft		67.6		60.2		54.5		48.6		43.6		40.6	
A_g, in.^{2}		53.9		47.7		41.7		35.8		29.9		25.8	
I_x, in.^{4}		2490		2190		1870		1590		1300		1110	
I_y, in.^{4}		803		697		599		504		412		349	
r_y, in.		3.86		3.82		3.79		3.75		3.71		3.68	
r_x/r_y		1.76		1.77		1.77		1.78		1.78		1.78	
$P_{ex}(KL)^2/10^4$, k-in.^{2}		71300		62700		53500		45500		37200		31800	
$P_{ey}(KL)^2/10^4$, k-in.^{2}		23000		19900		17100		14400		11800		9990	

ASD	LRFD
$\Omega_c = 1.67$	$\phi_c = 0.90$

[c] Shape is slender for compression with F_y = 50 ksi.

HP14-HP12

Table 4-2 (continued)
Available Strength in Axial Compression, kips
HP-Shapes

F_y = 50 ksi

Shape		HP14×								HP12×			
lb/ft		117		102		89		73[c]		84		74	
Design		P_n/Ω_c ASD	$\phi_c P_n$ LRFD	P_n/Ω_c ASD	$\phi_c P_n$ LRFD	P_n/Ω_c ASD	$\phi_c P_n$ LRFD	P_n/Ω_c ASD	$\phi_c P_n$ LRFD	P_n/Ω_c ASD	$\phi_c P_n$ LRFD	P_n/Ω_c ASD	$\phi_c P_n$ LRFD
Effective length, KL (ft), with respect to least radius of gyration, r_y	0	1030	1550	901	1350	781	1170	623	937	737	1110	653	981
	6	1000	1500	875	1310	758	1140	605	909	705	1060	624	938
	7	990	1490	865	1300	750	1130	598	899	694	1040	614	923
	8	977	1470	855	1280	740	1110	590	887	681	1020	603	906
	9	964	1450	843	1270	730	1100	582	875	667	1000	591	888
	10	949	1430	829	1250	718	1080	573	861	652	980	577	867
	11	933	1400	815	1220	705	1060	563	846	636	955	562	845
	12	916	1380	800	1200	692	1040	552	830	618	929	546	821
	13	897	1350	783	1180	677	1020	541	813	599	901	530	796
	14	878	1320	766	1150	662	995	528	794	580	872	512	770
	15	857	1290	748	1120	646	971	516	775	560	842	494	743
	16	836	1260	729	1100	629	946	502	755	539	810	476	715
	17	813	1220	709	1070	612	920	489	735	518	779	457	687
	18	790	1190	689	1030	594	893	475	713	496	746	437	658
	19	767	1150	668	1000	576	866	460	691	474	713	418	628
	20	743	1120	646	972	557	838	445	669	452	680	398	599
	22	694	1040	603	906	519	780	415	623	408	614	359	540
	24	643	967	558	839	480	722	384	577	365	549	320	482
	26	593	891	514	772	441	663	353	531	323	486	283	426
	28	543	816	470	706	403	606	322	484	283	425	247	372
	30	494	742	427	641	365	549	292	439	247	371	216	324
	32	446	671	385	579	329	494	263	396	217	326	189	285
	34	400	602	344	518	294	441	235	354	192	289	168	252
	36	357	537	307	462	262	394	210	316	171	257	150	225
	38	320	482	276	414	235	353	188	283	154	231	134	202
	40	289	435	249	374	212	319	170	256	139	208	121	182
Properties													
P_{wo}, kips		201	302	162	243	134	201	100	150	158	236	132	198
P_{wi}, kips/in.		26.8	40.3	23.5	35.3	20.5	30.8	16.8	25.3	22.8	34.3	20.2	30.3
P_{wb}, kips		790	1190	531	798	354	532	195	294	572	859	393	591
P_{fb}, kips		121	182	93.0	140	70.8	106	47.7	71.7	87.8	132	69.6	105
L_p, ft		12.9		15.6		17.8		21.2		10.4		11.9	
L_r, ft		50.5		45.7		41.7		37.6		41.3		37.9	
A_g, in.^{2}		34.4		30.1		26.1		21.4		24.6		21.8	
I_x, in.^{4}		1220		1050		904		729		650		569	
I_y, in.^{4}		443		380		326		261		213		186	
r_y, in.		3.59		3.56		3.53		3.49		2.94		2.92	
r_x/r_y		1.66		1.66		1.67		1.67		1.75		1.75	
$P_{ex}(KL)^2/10^4$, k-in.^{2}		34900		30100		25900		20900		18600		16300	
$P_{ey}(KL)^2/10^4$, k-in.^{2}		12700		10900		9330		7470		6100		5320	

ASD	LRFD
Ω_c = 1.67	ϕ_c = 0.90

[c] Shape is slender for compression with F_y = 50 ksi.

Table 4-2 (continued)

Available Strength in Axial Compression, kips

HP-Shapes

F_y = 50 ksi

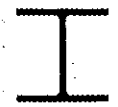

HP12-HP8

Shape		HP12×				HP10×				HP8×	
lb/ft		63		53[c]		57		42		36	
Design		P_n/Ω_c ASD	$\phi_c P_n$ LRFD	P_n/Ω_c ASD	$\phi_c P_n$ LRFD	P_n/Ω_c ASD	$\phi_c P_n$ LRFD	P_n/Ω_c ASD	$\phi_c P_n$ LRFD	P_n/Ω_c ASD	$\phi_c P_n$ LRFD
Effective length, KL (ft), with respect to least radius of gyration, r_y	0	551	828	460	691	500	751	371	558	317	477
	6	526	791	439	660	469	706	348	523	287	432
	7	518	778	432	649	459	690	340	511	277	416
	8	508	763	424	637	447	672	331	497	266	400
	9	497	747	415	623	434	652	321	482	254	381
	10	485	729	405	608	420	631	310	465	241	362
	11	472	710	394	592	404	608	298	448	227	341
	12	459	690	383	575	388	584	286	430	213	320
	13	445	668	371	557	372	559	273	411	199	299
	14	430	646	358	538	355	533	260	391	184	277
	15	414	622	345	519	337	506	247	371	170	256
	16	398	598	332	499	319	480	233	351	156	235
	17	382	574	318	478	301	453	220	330	143	214
	18	365	549	304	457	283	426	206	310	129	194
	19	348	524	290	436	265	399	193	290	117	175
	20	332	498	276	415	248	373	180	270	105	158
	22	298	448	248	373	214	322	154	232	86.9	131
	24	265	399	221	332	182	273	131	196	73.0	110
	26	234	351	194	292	155	233	111	167	62.2	93.5
	28	203	305	169	254	133	201	95.9	144	53.7	80.7
	30	177	266	147	221	116	175	83.5	126	46.7	70.3
	32	156	234	129	194	102	154	73.4	110	41.1	61.8
	34	138	207	114	172	90.5	136	65.0	97.7		
	36	123	185	102	153	80.7	121	58.0	87.2		
	38	110	166	91.6	138	72.5	109	52.1	78.2		
	40	99.6	150	82.7	124	65.4	98.3	47.0	70.6		
Properties											
P_{wo}, kips		107	161	81.9	123	118	177	78.2	117	83.8	126
P_{wi}, kips/in.		17.2	25.8	14.5	21.8	18.8	28.3	13.8	20.8	14.8	22.3
P_{wb}, kips		243	365	147	221	397	597	158	237	241	363
P_{fb}, kips		49.6	74.6	35.4	53.2	59.7	89.8	33.0	49.6	37.1	55.7
L_p, ft		14.4		16.6		8.65		12.3		6.90	
L_r, ft		34.0		31.1		34.8		28.3		27.3	
A_g, in.^{2}		18.4		15.5		16.7		12.4		10.6	
I_x, in.^{4}		472		393		294		210		119	
I_y, in.^{4}		153		127		101		71.7		40.3	
r_y, in.		2.88		2.86		2.45		2.41		1.95	
r_x/r_y		1.76		1.76		1.71		1.71		1.72	
$P_{ex}(KL)^2/10^4$, k-in.^{2}		13500		11200		8410		6010		3410	
$P_{ey}(KL)^2/10^4$, k-in.^{2}		4380		3630		2890		2050		1150	

ASD	LRFD
$\Omega_c = 1.67$	$\phi_c = 0.90$

[c] Shape is slender for compression with F_y = 50 ksi.

Note: Heavy line indicates KL/r_y equal to or greater than 200.

HSS20-HSS16

Table 4-3
Available Strength in Axial Compression, kips
Rectangular HSS

F_y = 46 ksi

Shape		HSS20×12×								HSS16×12×			
		5/8		1/2[c]		3/8[c]		5/16[c]		5/8		1/2	
t_{design}, in.		0.581		0.465		0.349		0.291		0.581		0.465	
lb/ft		127		103		78.5		65.9		110		89.7	
Design		P_n/Ω_c ASD	$\phi_c P_n$ LRFD	P_n/Ω_c ASD	$\phi_c P_n$ LRFD	P_n/Ω_c ASD	$\phi_c P_n$ LRFD	P_n/Ω_c ASD	$\phi_c P_n$ LRFD	P_n/Ω_c ASD	$\phi_c P_n$ LRFD	P_n/Ω_c ASD	$\phi_c P_n$ LRFD
Effective length, KL (ft), with respect to least radius of gyration, r_y	0	964	1450	740	1110	495	743	375	563	835	1250	678	1020
	6	950	1430	732	1100	490	737	372	560	822	1240	668	1000
	7	945	1420	730	1100	488	734	372	558	818	1230	664	998
	8	940	1410	726	1090	487	731	370	557	812	1220	660	992
	9	933	1400	723	1090	484	728	369	555	807	1210	655	985
	10	926	1390	719	1080	482	725	368	553	800	1200	650	978
	11	919	1380	714	1070	480	721	367	551	793	1190	645	969
	12	910	1370	709	1070	477	717	365	549	786	1180	639	960
	13	901	1350	704	1060	474	712	363	546	777	1170	632	950
	14	892	1340	698	1050	470	707	361	543	769	1160	625	940
	15	881	1320	692	1040	467	702	360	540	759	1140	618	929
	16	871	1310	685	1030	463	696	357	537	749	1130	610	917
	17	859	1290	678	1020	459	690	355	534	739	1110	602	905
	18	847	1270	671	1010	455	684	353	530	728	1090	593	892
	19	835	1250	663	997	451	677	350	526	717	1080	584	878
	20	822	1240	655	985	446	670	347	522	705	1060	575	864
	21	809	1220	647	972	441	663	345	518	693	1040	565	850
	22	795	1190	638	959	436	656	342	513	681	1020	556	835
	23	781	1170	629	945	431	648	338	509	668	1000	545	820
	24	766	1150	619	931	425	639	335	504	655	985	535	804
	25	752	1130	610	916	420	631	331	497	642	965	524	788
	26	736	1110	599	901	414	622	327	491	628	944	514	772
	27	721	1080	587	882	408	613	322	485	614	923	503	755
	28	705	1060	575	864	402	604	318	478	600	902	491	738
	29	690	1040	562	845	395	594	313	471	586	881	480	721
	30	673	1010	549	826	389	584	309	464	572	859	468	704
	32	641	963	523	787	375	563	299	449	543	816	445	669
	34	608	914	497	747	361	542	289	434	513	772	422	634
	36	575	864	471	708	346	519	278	418	484	727	398	599
	38	542	815	444	668	330	496	267	401	455	684	375	563
	40	510	766	418	629	314	472	255	384	426	640	352	528
Properties													
A_g, in.^{2}		35.0		28.3		21.5		18.1		30.3		24.6	
I_x, in.^{4}		1880		1550		1200		1010		1090		904	
I_y, in.^{4}		851		705		547		464		700		581	
r_y, in.		4.93		4.99		5.04		5.07		4.80		4.86	
r_x/r_y		1.49		1.48		1.48		1.48		1.25		1.25	

ASD	LRFD
$\Omega_c = 1.67$	$\phi_c = 0.90$

[c] Shape is slender for compression with F_y = 46 ksi.

Table 4-3 (continued)

Available Strength in Axial Compression, kips

Rectangular HSS

F_y = 46 ksi

HSS16

Shape		HSS16×12×				HSS16×8×							
		3/8[c]		5/16[c]		5/8		1/2		3/8[c]		5/16[c]	
t_{design}, in.		0.349		0.291		0.581		0.465		0.349		0.291	
lb/ft		68.3		57.4		93.3		76.1		58.1		48.9	
Design		P_n/Ω_c ASD	$\phi_c P_n$ LRFD	P_n/Ω_c ASD	$\phi_c P_n$ LRFD	P_n/Ω_c ASD	$\phi_c P_n$ LRFD	P_n/Ω_c ASD	$\phi_c P_n$ LRFD	P_n/Ω_c ASD	$\phi_c P_n$ LRFD	P_n/Ω_c ASD	$\phi_c P_n$ LRFD
Effective length, KL (ft), with respect to least radius of gyration, r_y	0	479	720	364	547	708	1060	676	865	405	609	310	466
	6	474	712	361	543	685	1030	558	838	396	595	304	457
	7	472	710	360	541	677	1020	551	829	393	590	302	454
	8	470	706	359	540	668	1000	544	818	389	585	299	450
	9	468	703	358	537	658	989	536	806	385	579	297	446
	10	465	699	356	535	647	972	527	792	380	572	294	441
	11	462	694	354	533	634	954	518	778	375	564	290	436
	12	459	689	353	530	621	934	507	762	370	556	286	430
	13	455	684	351	527	607	913	496	746	364	547	282	424
	14	451	678	348	524	593	891	485	728	358	537	278	418
	15	447	672	346	520	577	868	472	710	351	527	273	411
	16	443	665	344	516	561	844	460	691	344	516	268	403
	17	438	658	341	512	545	819	447	671	336	505	263	395
	18	433	651	338	508	528	793	433	651	328	493	258	387
	19	428	644	335	504	510	767	419	630	320	480	252	378
	20	423	635	332	499	493	741	405	609	311	467	246	369
	21	417	627	329	494	475	714	391	587	302	453	239	360
	22	411	618	325	489	457	686	376	565	292	438	233	350
	23	405	609	321	482	438	659	362	544	281	422	226	340
	24	399	600	316	475	420	631	347	522	270	405	219	329
	25	393	590	312	468	402	604	332	500	259	389	212	319
	26	386	580	307	461	384	577	318	478	248	372	205	307
	27	379	570	302	454	366	550	303	456	237	356	197	296
	28	372	559	297	446	348	523	289	434	226	339	189	284
	29	365	548	292	438	330	497	275	413	215	323	181	273
	30	357	537	286	430	313	471	261	392	205	307	173	260
	32	341	513	275	414	280	421	234	352	184	277	156	235
	34	324	487	264	396	248	373	208	313	164	247	140	210
	36	306	460	252	378	221	333	186	279	146	220	125	188
	38	288	433	239	360	199	299	167	250	131	197	112	168
	40	271	407	227	341	179	269	150	226	119	178	101	152
Properties													
A_g, in.^{2}		18.7		15.7		25.7		20.9		16.0		13.4	
I_x, in.^{4}		702		595		815		679		531		451	
I_y, in.^{4}		452		384		274		230		181		155	
r_y, in.		4.91		4.94		3.27		3.32		3.37		3.40	
r_x/r_y		1.25		1.24		1.72		1.72		1.71		1.71	

ASD	LRFD
Ω_c = 1.67	ϕ_c = 0.90

[c] Shape is slender for compression with F_y = 46 ksi.

HSS16-HSS14

Table 4-3 (continued)
Available Strength in Axial Compression, kips
Rectangular HSS

F_y = 46 ksi

Shape		HSS16×8×		HSS14×10×									
		1/4[c]		5/8		1/2		3/8[c]		5/16[c]		1/4[c]	
t_{design}, in.		0.233		0.581		0.465		0.349		0.291		0.233	
lb/ft		39.4		93.3		76.1		58.1		48.9		39.4	
Design		P_n/Ω_c	$\phi_c P_n$	P_n/Ω_c	$\phi_c P_n$	P_n/Ω_c	$\phi_c P_n$	P_n/Ω_c	$\phi_c P_n$	P_n/Ω_c	$\phi_c P_n$	P_n/Ω_c	$\phi_c P_n$
		ASD	LRFD	ASD	LRFD	ASD	LRFD	ASD	LRFD	ASD	LRFD	ASD	LRFD
Effective length, KL (ft), with respect to least radius of gyration, r_y	0	224	337	708	1060	576	865	432	649	336	505	237	356
	6	220	331	692	1040	564	847	425	639	331	497	235	353
	7	219	329	687	1030	559	840	422	635	329	495	234	351
	8	217	327	681	1020	554	833	419	630	327	492	233	350
	9	216	324	674	1010	549	825	416	625	325	488	232	348
	10	214	321	666	1000	543	815	412	620	322	484	230	346
	11	211	318	657	988	536	805	408	613	319	480	229	344
	12	209	314	648	974	529	794	404	607	316	475	227	342
	13	206	310	638	960	521	783	399	599	313	470	226	339
	14	203	306	628	944	512	770	393	591	309	464	224	336
	15	200	301	617	927	504	757	387	581	305	459	222	333
	16	197	297	605	910	495	743	380	571	301	452	219	330
	17	194	291	593	892	485	729	373	560	297	446	217	326
	18	190	286	581	873	475	714	365	549	292	439	215	323
	19	187	281	568	853	465	698	358	537	287	431	212	319
	20	183	275	554	833	454	682	350	525	282	424	209	315
	21	179	269	541	812	443	666	341	513	277	416	206	310
	22	175	262	527	791	432	649	333	500	271	408	203	306
	23	170	256	512	770	421	632	324	488	266	399	200	301
	24	166	249	498	748	409	615	316	475	260	390	196	295
	25	161	242	483	726	397	597	307	461	254	381	192	289
	26	156	235	468	704	385	579	298	448	248	372	188	282
	27	151	227	453	681	374	561	289	434	241	362	184	276
	28	146	220	438	659	362	543	280	421	235	353	179	269
	29	141	212	423	636	349	525	271	407	228	343	175	263
	30	136	204	408	614	337	507	262	393	221	332	170	256
	32	125	187	378	569	314	471	244	366	206	309	161	242
	34	113	171	349	525	290	436	226	339	191	287	151	227
	36	102	153	320	482	267	401	208	313	176	265	141	212
	38	91.3	137	293	440	244	367	191	287	162	243	131	196
	40	82.4	124	266	399	223	334	174	262	148	223	120	181
Properties													
A_g, in.^{2}		10.8		25.7		20.9		16.0		13.4		10.8	
I_x, in.^{4}		368		687		573		447		380		310	
I_y, in.^{4}		127		407		341		267		227		186	
r_y, in.		3.42		3.98		4.04		4.09		4.12		4.14	
r_x/r_y		1.70		1.30		1.29		1.29		1.29		1.29	

ASD	LRFD
Ω_c = 1.67	ϕ_c = 0.90

[c] Shape is slender for compression with F_y = 46 ksi.

Table 4-3 (continued)

Available Strength in Axial Compression, kips

Rectangular HSS

F_y = 46 ksi

HSS12

Shape		HSS12×10×								HSS12×8×			
		1/2		3/8		5/16[c]		1/4[c]		5/8		1/2	
t_{design}, in.		0.465		0.349		0.291		0.233		0.581		0.465	
lb/ft		69.3		53.0		44.6		36.0		76.3		62.5	
Design		P_n/Ω_c ASD	$\phi_c P_n$ LRFD	P_n/Ω_c ASD	$\phi_c P_n$ LRFD	P_n/Ω_c ASD	$\phi_c P_n$ LRFD	P_n/Ω_c ASD	$\phi_c P_n$ LRFD	P_n/Ω_c ASD	$\phi_c P_n$ LRFD	P_n/Ω_c ASD	$\phi_c P_n$ LRFD
Effective length, KL (ft), with respect to least radius of gyration, r_y	0	523	787	402	604	327	491	234	351	578	869	474	712
	6	512	769	394	591	321	482	231	347	559	840	458	688
	7	508	763	390	587	319	479	230	346	552	829	452	680
	8	503	756	387	582	317	476	229	344	544	817	446	671
	9	498	748	383	576	314	472	228	342	535	804	439	660
	10	492	739	379	569	311	468	226	340	525	789	431	648
	11	486	730	374	562	308	463	225	337	514	773	423	636
	12	479	720	369	554	305	458	223	335	503	756	414	622
	13	471	709	363	546	301	452	221	332	491	738	404	607
	14	464	697	357	537	297	446	219	329	478	719	394	592
	15	455	685	351	528	293	440	216	325	465	699	383	576
	16	447	672	345	518	288	433	214	322	451	678	372	560
	17	438	658	338	508	283	425	211	318	437	657	361	543
	18	428	644	331	497	277	417	209	314	422	635	349	525
	19	419	629	324	486	271	408	206	309	408	613	337	507
	20	409	614	316	475	265	398	203	305	392	590	325	489
	21	399	599	308	463	259	389	199	300	377	567	313	470
	22	388	583	300	452	252	379	196	294	362	544	301	452
	23	377	567	292	439	246	369	192	288	346	520	288	433
	24	367	551	284	427	239	359	187	282	331	497	276	414
	25	356	535	276	415	232	349	183	275	315	474	263	396
	26	345	518	268	402	225	338	179	268	300	451	251	377
	27	334	501	259	390	218	328	174	261	285	429	239	359
	28	322	485	251	377	211	317	169	254	270	406	227	341
	29	311	468	242	364	204	307	164	247	256	385	215	323
	30	300	451	234	351	197	296	159	240	242	363	203	306
	32	278	418	217	326	183	275	149	224	214	321	181	272
	34	256	385	200	301	169	254	139	208	189	285	160	241
	36	235	353	184	277	156	234	128	192	169	254	143	215
	38	214	322	169	253	143	214	117	176	152	228	128	193
	40	194	292	153	230	130	195	107	161	137	206	116	174
Properties													
A_g, in.^{2}		19.0		14.6		12.2		9.90		21.0		17.2	
I_x, in.^{4}		395		310		264		216		397		333	
I_y, in.^{4}		298		234		200		164		210		178	
r_y, in.		3.96		4.01		4.04		4.07		3.16		3.21	
r_x/r_y		1.15		1.15		1.15		1.15		1.37		1.37	

ASD	LRFD
Ω_c = 1.67	ϕ_c = 0.90

[c] Shape is slender for compression with F_y = 46 ksi.

HSS12

Table 4-3 (continued)
Available Strength in Axial Compression, kips
Rectangular HSS

F_y = 46 ksi

Shape		HSS12×8×								HSS12×6×			
		3/8		5/16[c]		1/4[c]		3/16[c]		5/8		1/2	
t_{design}, in.		0.349		0.291		0.233		0.174		0.581		0.465	
lb/ft		47.9		40.4		32.6		24.7		67.8		55.7	
Design		P_n/Ω_c ASD	$\phi_c P_n$ LRFD	P_n/Ω_c ASD	$\phi_c P_n$ LRFD	P_n/Ω_c ASD	$\phi_c P_n$ LRFD	P_n/Ω_c ASD	$\phi_c P_n$ LRFD	P_n/Ω_c ASD	$\phi_c P_n$ LRFD	P_n/Ω_c ASD	$\phi_c P_n$ LRFD
Effective length, KL (ft), with respect to least radius of gyration, r_y	0	364	546	296	445	218	327	136	204	515	774	421	633
	6	352	529	289	434	213	320	134	201	485	728	397	597
	7	348	523	286	430	211	317	133	200	474	712	389	585
	8	343	516	283	425	209	314	132	199	462	695	380	571
	9	338	508	280	420	207	311	131	197	449	675	369	555
	10	332	499	276	415	204	307	130	196	435	653	358	538
	11	326	490	272	408	202	303	129	194	420	631	346	520
	12	319	480	267	401	199	298	128	192	403	606	333	501
	13	312	469	262	394	195	294	127	190	387	581	320	481
	14	304	458	257	386	192	288	125	188	369	555	306	460
	15	297	446	250	376	188	283	124	186	352	529	292	439
	16	288	433	243	365	184	277	122	183	334	502	278	418
	17	280	421	236	355	180	271	120	180	316	474	263	396
	18	271	407	229	344	176	265	118	177	297	447	249	374
	19	262	394	221	333	172	258	116	174	279	420	234	352
	20	253	380	214	321	167	251	114	171	261	393	220	330
	21	244	367	206	310	162	244	111	167	244	366	206	309
	22	235	352	198	298	157	236	109	164	227	341	192	288
	23	225	338	190	286	152	228	106	160	210	316	178	268
	24	216	324	183	274	147	220	103	156	194	291	165	248
	25	206	310	175	263	141	212	100	151	178	268	152	229
	26	197	296	167	251	136	204	97.0	146	165	248	141	211
	27	188	282	159	239	130	195	93.6	141	153	230	130	196
	28	179	269	152	228	124	186	90.2	136	142	214	121	182
	29	170	255	144	217	118	177	86.7	130	133	199	113	170
	30	161	242	137	205	112	168	83.2	125	124	186	106	159
	32	144	216	122	184	100	151	75.9	114	109	164	92.9	140
	34	127	192	108	163	89.2	134	68.5	103	96.4	145	82.2	124
	36	114	171	96.8	145	79.5	120	61.1	91.8	86.0	129	73.4	110
	38	102	153	86.8	131	71.4	107	54.8	82.4	77.2	116	65.8	99.0
	40	92.1	138	78.4	118	64.4	96.8	49.5	74.4			59.4	89.3
Properties													
A_g, in.^{2}		13.2		11.1		8.96		6.76		18.7		15.3	
I_x, in.^{4}		262		224		184		140		321		271	
I_y, in.^{4}		140		120		98.8		75.7		107		91.1	
r_y, in.		3.27		3.29		3.32		3.35		2.39		2.44	
r_x/r_y		1.37		1.37		1.36		1.36		1.73		1.73	

ASD	LRFD
Ω_c = 1.67	ϕ_c = 0.90

[c] Shape is slender for compression with F_y = 46 ksi.
Note: Heavy line indicates KL/r_y equal to or greater than 200.

F_y = 46 ksi

Table 4-3 (continued)
Available Strength in Axial Compression, kips
Rectangular HSS

HSS12-HSS10

Shape		HSS12×6×								HSS10×8×			
		3/8		5/16[c]		1/4[c]		3/16[c]		5/8		1/2	
t_{design}, in.		0.349		0.291		0.233		0.174		0.581		0.465	
lb/ft		42.8		36.1		29.2		22.2		67.8		55.7	
Design		P_n/Ω_c ASD	$\phi_c P_n$ LRFD	P_n/Ω_c ASD	$\phi_c P_n$ LRFD	P_n/Ω_c ASD	$\phi_c P_n$ LRFD	P_n/Ω_c ASD	$\phi_c P_n$ LRFD	P_n/Ω_c ASD	$\phi_c P_n$ LRFD	P_n/Ω_c ASD	$\phi_c P_n$ LRFD
Effective length, KL (ft), with respect to least radius of gyration, r_y	0	325	489	264	396	192	288	126	189	515	774	421	633
	6	307	462	253	380	185	278	122	183	497	746	407	611
	7	301	453	249	374	183	274	120	181	490	737	402	604
	8	294	442	244	367	180	270	119	179	483	726	396	595
	9	286	430	239	360	177	265	117	176	474	713	389	585
	10	278	418	234	352	173	260	115	173	465	699	382	574
	11	269	404	227	341	169	254	113	170	456	685	374	562
	12	260	390	219	330	165	248	111	166	445	669	366	550
	13	250	375	211	317	160	241	108	162	434	652	357	537
	14	239	360	203	305	156	234	105	158	422	635	348	522
	15	229	344	194	291	150	226	103	154	410	616	338	508
	16	218	327	185	278	145	218	99.5	150	397	597	328	493
	17	207	311	176	264	139	209	96.3	145	384	577	317	477
	18	196	294	167	251	133	200	92.9	140	371	557	307	461
	19	185	278	158	237	127	191	89.4	134	357	537	296	444
	20	174	262	148	223	121	182	85.8	129	343	516	284	428
	21	163	245	139	210	114	171	82.1	123	329	495	273	411
	22	153	229	131	196	107	161	78.2	118	315	474	262	394
	23	142	214	122	183	100	150	74.2	112	301	453	251	377
	24	132	199	113	171	93.1	140	70.1	105	287	432	239	360
	25	122	184	105	158	86.5	130	66.0	99.2	273	411	228	343
	26	113	170	97.3	146	80.0	120	61.7	92.8	259	390	217	326
	27	105	157	90.2	136	74.2	111	57.3	86.1	246	370	206	309
	28	97.4	146	83.9	126	69.0	104	53.3	80.1	233	349	195	293
	29	90.8	136	78.2	118	64.3	96.6	49.7	74.7	219	330	184	277
	30	84.9	128	73.1	110	60.1	90.3	46.4	69.8	207	311	174	262
	32	74.8	112	64.2	96.5	52.8	79.4	40.8	61.3	182	274	154	231
	34	66.1	99.3	56.9	85.5	46.8	70.3	36.1	54.3	161	242	136	205
	36	58.9	88.6	50.7	76.3	41.7	62.7	32.2	46.5	144	216	121	183
	38	52.9	79.5	45.5	68.4	37.4	56.3	28.9	43.5	129	194	109	164
	40	47.7	71.7	41.1	61.8	33.8	50.8	26.1	39.2	116	175	98.4	148
Properties													
A_g, in.^{2}		11.8		9.92		8.03		6.06		18.7		15.3	
I_x, in.^{4}		215		184		151		116		253		214	
I_y, in.^{4}		72.9		62.8		51.9		40.0		178		151	
r_y, in.		2.49		2.52		2.54		2.57		3.09		3.14	
r_x/r_y		1.72		1.71		1.71		1.70		1.19		1.19	

ASD	LRFD
Ω_c = 1.67	ϕ_c = 0.90

[c] Shape is slender for compression with F_y = 46 ksi.

HSS10

Table 4-3 (continued)
Available Strength in Axial Compression, kips
Rectangular HSS

F_y = 46 ksi

Shape		HSS10×8×								HSS10×6×	
		3/8		5/16		1/4[c]		3/16[c]		5/8	
t_{design}, in.		0.349		0.291		0.233		0.174		0.581	
lb/ft		42.8		36.1		29.2		22.2		59.3	
Design		P_n/Ω_c ASD	$\phi_c P_n$ LRFD	P_n/Ω_c ASD	$\phi_c P_n$ LRFD	P_n/Ω_c ASD	$\phi_c P_n$ LRFD	P_n/Ω_c ASD	$\phi_c P_n$ LRFD	P_n/Ω_c ASD	$\phi_c P_n$ LRFD
Effective length, KL (ft), with respect to least radius of gyration, r_y	0	325	489	273	411	212	318	133	200	452	679
	6	314	472	264	397	206	310	131	197	424	637
	7	310	466	261	392	204	307	130	196	414	623
	8	306	460	257	387	202	303	129	194	403	606
	9	301	452	253	381	199	300	128	193	391	588
	10	296	444	249	374	197	295	127	191	378	569
	11	290	435	244	367	194	291	126	189	365	548
	12	283	426	239	359	190	286	124	187	350	526
	13	277	416	233	351	187	280	123	185	335	504
	14	270	405	228	342	183	275	121	182	319	480
	15	262	394	221	333	179	269	119	179	303	456
	16	255	383	215	323	174	262	117	176	287	432
	17	247	371	209	314	170	255	115	173	271	407
	18	239	359	202	303	164	247	113	170	255	383
	19	231	346	195	293	159	239	111	166	239	359
	20	222	334	188	283	153	230	108	162	223	335
	21	214	321	181	272	148	222	105	158	207	311
	22	205	308	174	261	142	213	103	154	192	288
	23	196	295	167	251	136	205	99.4	149	177	266
	24	188	282	160	240	130	196	95.9	144	163	245
	25	179	269	152	229	125	187	92.4	139	150	225
	26	171	257	145	218	119	179	88.9	134	139	208
	27	162	244	138	208	113	170	85.2	128	129	193
	28	154	232	131	197	108	162	81.5	123	120	180
	29	146	219	125	187	102	154	77.8	117	111	168
	30	138	207	118	177	96.9	146	74.0	111	104	157
	32	122	184	105	158	86.5	130	66.4	99.8	91.5	138
	34	108	163	92.9	140	76.6	115	58.9	88.5	81.1	122
	36	96.7	145	82.8	125	68.3	103	52.5	78.9	72.3	109
	38	86.8	130	74.3	112	61.3	92.1	47.1	70.8	64.9	97.6
	40	78.3	118	67.1	101	55.3	83.2	42.5	63.9		
Properties											
A_g, in.^{2}		11.8		9.92		8.03		6.06		16.4	
I_x, in.^{4}		169		145		119		91.4		201	
I_y, in.^{4}		120		103		84.7		65.1		89.4	
r_y, in.		3.19		3.22		3.25		3.28		2.34	
r_x/r_y		1.19		1.19		1.18		1.18		1.50	

ASD	LRFD
Ω_c = 1.67	ϕ_c = 0.90

[c] Shape is slender for compression with F_y = 46 ksi.
Note: Heavy line indicates KL/r_y equal to or greater than 200.

Table 4-3 (continued)

Available Strength in Axial Compression, kips

Rectangular HSS

$F_y = 46$ ksi

HSS10

Shape		HSS10×6×									
		1/2		3/8		5/16		1/4[c]		3/16[c]	
t_{design}, in.		0.465		0.349		0.291		0.233		0.174	
lb/ft		48.9		37.7		31.8		25.8		19.6	
Design		P_n/Ω_c ASD	$\phi_c P_n$ LRFD	P_n/Ω_c ASD	$\phi_c P_n$ LRFD	P_n/Ω_c ASD	$\phi_c P_n$ LRFD	P_n/Ω_c ASD	$\phi_c P_n$ LRFD	P_n/Ω_c ASD	$\phi_c P_n$ LRFD
Effective length, KL (ft), with respect to least radius of gyration, r_y	0	372	559	286	431	241	363	186	279	123	185
	6	350	526	270	406	228	343	178	268	119	179
	7	342	514	265	398	223	336	175	263	117	176
	8	334	501	258	388	218	328	172	259	116	174
	9	324	487	251	377	212	319	168	253	114	171
	10	314	472	243	366	206	309	164	247	111	167
	11	303	455	235	354	199	299	160	241	109	164
	12	291	438	227	341	192	289	155	234	106	160
	13	279	420	218	327	185	277	150	226	103	155
	14	267	401	208	313	177	266	144	216	100	151
	15	254	382	199	299	169	254	138	207	97.0	146
	16	241	362	189	284	161	242	131	197	93.5	141
	17	228	342	179	269	152	229	125	187	90.0	135
	18	215	323	169	254	144	217	118	177	86.2	130
	19	202	303	159	239	136	204	111	167	82.4	124
	20	189	284	149	225	128	192	105	157	78.4	118
	21	176	265	140	210	120	180	98.2	148	74.3	112
	22	164	246	130	196	112	168	91.8	138	70.1	105
	23	152	228	121	182	104	157	85.6	129	65.8	98.9
	24	140	210	112	169	96.7	145	79.5	120	61.4	92.3
	25	129	194	103	155	89.3	134	73.5	110	57.0	85.6
	26	119	179	95.6	144	82.5	124	68.0	102	52.7	79.1
	27	110	166	88.7	133	76.5	115	63.0	94.7	48.8	73.4
	28	103	154	82.4	124	71.2	107	58.6	88.1	45.4	68.2
	29	95.7	144	76.8	116	66.3	99.7	54.6	82.1	42.3	63.6
	30	89.4	134	71.8	108	62.0	93.2	51.1	76.7	39.6	59.4
	32	78.6	118	63.1	94.9	54.5	81.9	44.9	67.4	34.8	52.2
	34	69.6	105	55.9	84.0	48.3	72.5	39.7	59.7	30.8	46.3
	36	62.1	93.3	49.9	75.0	43.0	64.7	35.5	53.3	27.5	41.3
	38	55.7	83.8	44.8	67.3	38.6	58.1	31.8	47.8	24.7	37.0
	40			40.4	60.7	34.9	52.4	28.7	43.2	22.2	33.4
Properties											
A_g, in.^{2}		13.5		10.4		8.76		7.10		5.37	
I_x, in.^{4}		171		137		118		96.9		74.6	
I_y, in.^{4}		76.8		61.8		53.3		44.1		34.1	
r_y, in.		2.39		2.44		2.47		2.49		2.52	
r_x/r_y		1.49		1.49		1.48		1.48		1.48	
ASD		LRFD		[c] Shape is slender for compression with $F_y = 46$ ksi.							
$\Omega_c = 1.67$		$\phi_c = 0.90$		Note: Heavy line indicates KL/r_y equal to or greater than 200.							

Table 4-3 (continued)
Available Strength in Axial Compression, kips
Rectangular HSS

F_y = 46 ksi

HSS10-HSS9

Shape		HSS10×5×								HSS9×7×	
		3/8		5/16		1/4[c]		3/16[c]		5/8	
t_{design}, in.		0.349		0.291		0.233		0.174		0.581	
lb/ft		35.1		29.7		24.1		18.4		59.3	
Design		P_n/Ω_c ASD	$\phi_c P_n$ LRFD	P_n/Ω_c ASD	$\phi_c P_n$ LRFD	P_n/Ω_c ASD	$\phi_c P_n$ LRFD	P_n/Ω_c ASD	$\phi_c P_n$ LRFD	P_n/Ω_c ASD	$\phi_c P_n$ LRFD
Effective length, KL (ft), with respect to least radius of gyration, r_y	0	266	400	225	338	173	260	114	171	452	679
	6	245	368	207	312	163	245	108	163	430	647
	7	238	358	201	303	159	240	106	160	423	636
	8	230	345	195	293	155	233	104	156	414	623
	9	221	332	187	282	151	227	102	153	405	609
	10	212	318	180	270	146	219	98.7	148	395	593
	11	202	303	171	257	140	210	95.7	144	384	577
	12	191	287	163	244	133	200	92.4	139	372	559
	13	180	271	154	231	126	189	88.9	134	360	541
	14	170	255	144	217	119	178	85.1	128	347	521
	15	159	238	135	203	111	167	81.2	122	334	501
	16	148	222	126	190	104	156	77.0	116	320	481
	17	137	206	117	176	96.8	145	72.7	109	306	460
	18	126	190	108	163	89.6	135	68.2	103	292	439
	19	116	174	99.5	150	82.6	124	63.6	95.5	278	417
	20	106	159	91.1	137	75.9	114	58.8	88.4	263	396
	21	96.2	145	82.9	125	69.2	104	53.9	81.0	249	375
	22	87.6	132	75.5	113	63.1	94.8	49.1	73.8	235	353
	23	80.2	121	69.1	104	57.7	86.7	44.9	67.5	221	333
	24	73.6	111	63.4	95.3	53.0	79.6	41.3	62.0	208	312
	25	67.9	102	58.5	87.9	48.8	73.4	38.0	57.2	194	292
	26	62.7	94.3	54.1	81.2	45.1	67.9	35.2	52.9	182	273
	27	58.2	87.5	50.1	75.3	41.9	62.9	32.6	49.0	169	253
	28	54.1	81.3	46.6	70.1	38.9	58.5	30.3	45.6	157	236
	29	50.4	75.8	43.4	65.3	36.3	54.5	28.3	42.5	146	220
	30	47.1	70.8	40.6	61.0	33.9	51.0	26.4	39.7	137	205
	32	41.4	62.3	35.7	53.6	29.8	44.8	23.2	34.9	120	180
	34	36.7	55.2	31.6	47.5	26.4	39.7	20.6	30.9	106	160
	36									94.9	143
	38									85.1	128
	40									76.8	115
Properties											
A_g, in.^{2}		9.67		8.17		6.63		5.02		16.4	
I_x, in.^{4}		120		104		85.8		66.2		174	
I_y, in.^{4}		40.6		35.2		29.3		22.7		117	
r_y, in.		2.05		2.07		2.10		2.13		2.68	
r_x/r_y		1.72		1.72		1.71		1.70		1.22	

ASD: Ω_c = 1.67 | LRFD: ϕ_c = 0.90

[c] Shape is slender for compression with F_y = 46 ksi.

Note: Heavy line indicates KL/r_y equal to or greater than 200.

Table 4-3 (continued)
Available Strength in Axial Compression, kips
Rectangular HSS

F_y = 46 ksi

HSS9

Shape		HSS9×7×									
		1/2		3/8		5/16		1/4[c]		3/16[c]	
t_{design}, in.		0.465		0.349		0.291		0.233		0.174	
lb/ft		48.9		37.7		31.8		25.8		19.6	
Design		P_n/Ω_c ASD	$\phi_c P_n$ LRFD	P_n/Ω_c ASD	$\phi_c P_n$ LRFD	P_n/Ω_c ASD	$\phi_c P_n$ LRFD	P_n/Ω_c ASD	$\phi_c P_n$ LRFD	P_n/Ω_c ASD	$\phi_c P_n$ LRFD
Effective length, KL (ft), with respect to least radius of gyration, r_y	0	372	559	286	431	241	363	195	293	129	194
	6	355	533	274	412	231	347	187	282	126	189
	7	349	524	269	405	227	342	184	277	125	188
	8	342	514	264	397	223	335	181	272	123	186
	9	335	503	259	389	218	328	177	267	122	183
	10	327	491	253	380	213	321	173	261	120	181
	11	318	478	246	370	208	313	169	254	118	178
	12	308	464	239	359	202	304	165	247	116	174
	13	299	449	232	348	196	295	160	240	113	170
	14	288	433	224	337	190	285	155	232	110	166
	15	278	417	216	325	183	275	149	224	108	162
	16	267	401	208	312	176	265	144	216	104	157
	17	255	384	199	300	169	254	138	208	101	152
	18	244	367	191	287	162	244	133	199	97.8	147
	19	233	350	182	274	155	233	127	191	94.3	142
	20	221	332	174	261	148	222	121	182	90.7	136
	21	210	315	165	248	140	211	115	173	86.9	131
	22	198	298	156	235	133	200	109	164	83.1	125
	23	187	281	148	222	126	190	104	156	79.2	119
	24	176	264	139	209	119	179	97.9	147	75.1	113
	25	165	248	131	197	112	168	92.3	139	70.9	107
	26	154	232	123	185	105	158	86.8	131	66.8	100
	27	144	217	115	173	98.7	148	81.5	122	62.8	94.3
	28	134	201	107	161	92.1	138	76.2	115	58.8	88.4
	29	125	188	99.8	150	85.8	129	71.1	107	54.9	82.5
	30	117	175	93.2	140	80.2	121	66.4	99.8	51.3	77.1
	32	103	154	81.9	123	70.5	106	58.4	87.7	45.1	67.8
	34	90.8	137	72.6	109	62.5	93.9	51.7	77.7	39.9	60.0
	36	81.0	122	64.7	97.3	55.7	83.7	46.1	69.3	35.6	53.5
	38	72.7	109	58.1	87.3	50.0	75.1	41.4	62.2	32.0	48.1
	40	65.6	98.7	52.4	78.8	45.1	67.8	37.4	56.2	28.9	43.4
Properties											
A_g, in.^{2}		13.5		10.4		8.76		7.10		5.37	
I_x, in.^{4}		149		119		102		84.1		64.7	
I_y, in.^{4}		100		80.4		69.2		57.2		44.1	
r_y, in.		2.73		2.78		2.81		2.84		2.87	
r_x/r_y		1.22		1.22		1.21		1.21		1.21	

ASD: Ω_c = 1.67 | LRFD: ϕ_c = 0.90

[c] Shape is slender for compression with F_y = 46 ksi.

HSS9

Table 4-3 (continued)
Available Strength in Axial Compression, kips
Rectangular HSS

F_y = 46 ksi

Shape		HSS9×5×											
		5/8		1/2		3/8		5/16		1/4[c]		3/16[c]	
t_{design}, in.		0.581		0.465		0.349		0.291		0.233		0.174	
lb/ft		50.8		42.1		32.6		27.6		22.4		17.1	
Design		P_n/Ω_c	$\phi_c P_n$	P_n/Ω_c	$\phi_c P_n$	P_n/Ω_c	$\phi_c P_n$	P_n/Ω_c	$\phi_c P_n$	P_n/Ω_c	$\phi_c P_n$	P_n/Ω_c	$\phi_c P_n$
		ASD	LRFD	ASD	LRFD	ASD	LRFD	ASD	LRFD	ASD	LRFD	ASD	LRFD
Effective length, KL (ft), with respect to least radius of gyration, r_y	0	386	580	320	480	247	371	209	314	169	254	112	168
	6	351	527	292	439	227	341	192	289	157	236	106	159
	7	339	510	283	425	220	331	187	281	152	229	104	156
	8	326	490	272	409	213	319	180	271	147	221	102	153
	9	312	468	261	392	204	307	173	261	142	213	98.8	149
	10	297	446	249	374	195	294	166	250	136	204	95.8	144
	11	281	422	236	355	186	279	158	238	130	195	92.6	139
	12	264	397	223	335	176	265	150	225	123	185	89.0	134
	13	247	372	210	315	166	250	142	213	116	175	85.2	128
	14	230	346	196	294	156	234	133	200	110	165	81.2	122
	15	214	321	182	274	146	219	124	187	103	154	77.0	116
	16	197	296	169	253	135	203	116	174	95.8	144	72.6	109
	17	180	271	155	233	125	188	107	161	89.0	134	68.1	102
	18	165	247	142	214	115	173	99.1	149	82.3	124	63.1	94.9
	19	149	224	130	195	106	159	91.0	137	75.7	114	58.2	87.5
	20	135	202	117	177	96.5	145	83.2	125	69.4	104	53.4	80.3
	21	122	184	107	160	87.5	131	75.5	113	63.2	95.0	48.7	73.3
	22	111	167	97.1	146	79.7	120	68.8	103	57.6	86.5	44.4	66.8
	23	102	153	88.8	134	72.9	110	62.9	94.6	52.7	79.2	40.6	61.1
	24	93.5	141	81.6	123	67.0	101	57.8	86.9	48.4	72.7	37.3	56.1
	25	86.2	130	75.2	113	61.7	92.8	53.3	80.1	44.6	67.0	34.4	51.7
	26	79.7	120	69.5	104	57.1	85.8	49.3	74.0	41.2	62.0	31.8	47.8
	27	73.9	111	64.5	96.9	52.9	79.5	45.7	68.6	38.2	57.4	29.5	44.3
	28	68.7	103	59.9	90.1	49.2	74.0	42.5	63.8	35.5	53.4	27.4	41.2
	29	64.1	96.3	55.9	84.0	45.9	69.0	39.6	59.5	33.1	49.8	25.6	38.4
	30	59.9	90.0	52.2	78.5	42.9	64.4	37.0	55.6	31.0	46.5	23.9	35.9
	32	52.6	79.1	45.9	69.0	37.7	56.6	32.5	48.9	27.2	40.9	21.0	31.6
	34							28.8	43.3	24.1	36.2	18.6	27.9
Properties													
A_g, in.^{2}		14.0		11.6		8.97		7.59		6.17		4.67	
I_x, in.^{4}		133		115		92.5		79.8		66.1		51.1	
I_y, in.^{4}		52.0		45.2		36.8		32.0		26.6		20.7	
r_y, in.		1.92		1.97		2.03		2.05		2.08		2.10	
r_x/r_y		1.60		1.59		1.58		1.58		1.57		1.58	

ASD	LRFD
Ω_c = 1.67	ϕ_c = 0.90

[c] Shape is slender for compression with F_y = 46 ksi.
Note: Heavy line indicates KL/r_y equal to or greater than 200.

Table 4-3 (continued)

Available Strength in Axial Compression, kips

Rectangular HSS

F_y = 46 ksi

HSS8

Shape		HSS8×6×									
		5/8		1/2		3/8		5/16		1/4	
t_{design}, in.		0.581		0.465		0.349		0.291		0.233	
lb/ft		50.8		42.1		32.6		27.6		22.4	
Design		P_n/Ω_c ASD	$\phi_c P_n$ LRFD	P_n/Ω_c ASD	$\phi_c P_n$ LRFD	P_n/Ω_c ASD	$\phi_c P_n$ LRFD	P_n/Ω_c ASD	$\phi_c P_n$ LRFD	P_n/Ω_c ASD	$\phi_c P_n$ LRFD
Effective length, KL (ft), with respect to least radius of gyration, r_y	0	386	580	320	480	247	371	209	314	170	255
	6	360	542	299	450	232	349	197	296	160	241
	7	352	529	293	440	227	342	193	289	157	236
	8	342	514	285	428	221	333	188	282	153	230
	9	331	498	276	415	215	323	182	274	149	224
	10	320	480	267	401	208	313	177	266	144	217
	11	307	462	257	386	201	302	171	256	139	209
	12	294	442	247	371	193	290	164	247	134	202
	13	281	422	236	354	185	278	157	236	129	194
	14	267	401	225	337	177	266	150	226	123	185
	15	253	380	213	320	168	253	143	215	117	177
	16	238	358	202	303	159	240	136	204	112	168
	17	224	337	190	285	151	227	129	193	106	159
	18	210	315	178	268	142	213	121	182	99.9	150
	19	196	294	167	251	133	200	114	171	94.0	141
	20	182	273	156	234	125	187	107	160	88.2	133
	21	168	253	144	217	116	175	99.6	150	82.4	124
	22	155	233	134	201	108	162	92.6	139	76.8	115
	23	142	214	123	185	100	150	85.9	129	71.4	107
	24	131	196	113	170	92.1	138	79.2	119	66.0	99.2
	25	120	181	104	157	84.9	128	73.0	110	60.8	91.5
	26	111	167	96.4	145	78.5	118	67.5	101	56.3	84.6
	27	103	155	89.4	134	72.8	109	62.6	94.1	52.2	78.4
	28	96.0	144	83.1	125	67.6	102	58.2	87.5	48.5	72.9
	29	89.5	135	77.5	116	63.1	94.8	54.3	81.6	45.2	68.0
	30	83.7	126	72.4	109	58.9	88.6	50.7	76.2	42.3	63.5
	32	73.5	111	63.6	95.7	51.8	77.8	44.6	67.0	37.1	55.8
	34	65.1	97.9	56.4	84.7	45.9	69.0	39.5	59.3	32.9	49.4
	36	58.1	87.3	50.3	75.6	40.9	61.5	35.2	52.9	29.3	44.1
	38			45.1	67.8	36.7	55.2	31.6	47.5	26.3	39.6
	40							28.5	42.9	23.8	35.7
Properties											
A_g, in.^{2}		14.0		11.6		8.97		7.59		6.17	
I_x, in.^{4}		114		98.2		79.1		68.3		56.6	
I_y, in.^{4}		72.3		62.5		50.6		43.8		36.4	
r_y, in.		2.27		2.32		2.38		2.40		2.43	
r_x/r_y		1.26		1.25		1.25		1.25		1.25	
ASD		LRFD		Note: Heavy line indicates KL/r_y equal to or greater than 200.							
Ω_c = 1.67		ϕ_c = 0.90									

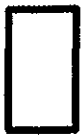

HSS8

Table 4-3 (continued)
Available Strength in Axial Compression, kips
Rectangular HSS

F_y = 46 ksi

Shape		HSS8×6×		HSS8×4×							
		3/16[c]		5/8		1/2		3/8		5/16	
t_{design}, in.		0.174		0.581		0.465		0.349		0.291	
lb/ft		17.1		42.3		35.2		27.5		23.3	
Design		P_n/Ω_c	$\phi_c P_n$	P_n/Ω_c	$\phi_c P_n$	P_n/Ω_c	$\phi_c P_n$	P_n/Ω_c	$\phi_c P_n$	P_n/Ω_c	$\phi_c P_n$
		ASD	LRFD	ASD	LRFD	ASD	LRFD	ASD	LRFD	ASD	LRFD
Effective length, KL (ft), with respect to least radius of gyration, r_y	0	119	180	322	484	268	403	209	314	177	266
	6	114	172	277	416	232	349	183	274	155	233
	7	113	169	262	393	221	332	174	261	148	223
	8	110	166	246	369	208	313	164	247	140	211
	9	108	162	228	343	194	292	154	232	132	198
	10	105	159	211	317	180	271	144	216	123	185
	11	103	154	193	290	166	249	133	200	114	171
	12	99.6	150	175	263	151	227	122	183	105	157
	13	96.3	145	157	236	137	206	111	167	95.6	144
	14	92.9	140	140	211	123	185	100	151	86.7	130
	15	89.2	134	124	186	110	165	90.1	135	78.0	117
	16	85.4	128	109	163	96.6	145	80.1	120	69.6	105
	17	81.0	122	96.4	145	85.6	129	71.0	107	61.7	92.7
	18	76.6	115	85.9	129	76.4	115	63.3	95.1	55.0	82.7
	19	72.2	108	77.1	116	68.5	103	56.8	85.4	49.4	74.2
	20	67.8	102	69.6	105	61.9	93.0	51.3	77.1	44.6	67.0
	21	63.5	95.4	63.1	94.9	56.1	84.3	46.5	69.9	40.4	60.8
	22	59.3	89.1	57.5	86.5	51.1	76.8	42.4	63.7	36.8	55.4
	23	55.2	82.9	52.6	79.1	46.8	70.3	38.8	58.3	33.7	50.7
	24	51.2	76.9	48.3	72.7	43.0	64.6	35.6	53.5	31.0	46.5
	25	47.2	70.9	44.6	67.0	39.6	59.5	32.8	49.3	28.5	42.9
	26	43.6	65.6			36.6	55.0	30.3	45.6	26.4	39.6
	27	40.5	60.8							24.5	36.8
	28	37.6	56.6								
	29	35.1	52.7								
	30	32.8	49.3								
	32	28.8	43.3								
	34	25.5	38.4								
	36	22.8	34.2								
	38	20.4	30.7								
	40	18.4	27.7								
Properties											
A_g, in.^{2}		4.67		11.7		9.74		7.58		6.43	
I_x, in.^{4}		43.7		82.0		71.8		58.7		51.0	
I_y, in.^{4}		28.2		26.6		23.6		19.6		17.2	
r_y, in.		2.46		1.51		1.56		1.61		1.63	
r_x/r_y		1.24		1.75		1.74		1.73		1.73	

ASD	LRFD
Ω_c = 1.67	ϕ_c = 0.90

[c] Shape is slender for compression with F_y = 46 ksi.

Note: Heavy line indicates KL/r_y equal to or greater than 200.

Table 4-3 (continued)
Available Strength in Axial Compression, kips
Rectangular HSS

F_y = 46 ksi

HSS8-HSS7

Shape		HSS8×4×						HSS7×5×			
		1/4		3/16[c]		1/8[c]		1/2		3/8	
t_{design}, in.		0.233		0.174		0.116		0.465		0.349	
lb/ft		19.0		14.5		9.86		35.2		27.5	
Design		P_n/Ω_c	$\phi_c P_n$	P_n/Ω_c	$\phi_c P_n$	P_n/Ω_c	$\phi_c P_n$	P_n/Ω_c	$\phi_c P_n$	P_n/Ω_c	$\phi_c P_n$
		ASD	LRFD	ASD	LRFD	ASD	LRFD	ASD	LRFD	ASD	LRFD
Effective length, KL (ft), with respect to least radius of gyration, r_y	0	144	217	100	151	56.0	84.2	268	403	209	314
	6	127	191	91.9	138	52.2	78.4	244	366	191	287
	7	121	183	88.8	134	50.8	76.4	236	354	185	278
	8	115	173	85.4	128	49.3	74.1	226	340	178	267
	9	109	163	81.6	123	47.6	71.5	216	325	171	256
	10	102	153	77.3	116	45.7	68.6	206	309	163	244
	11	94.3	142	72.7	109	43.6	65.5	195	292	154	232
	12	87.0	131	67.3	101	41.4	62.2	183	275	146	219
	13	79.7	120	61.8	92.9	39.0	58.6	171	257	137	206
	14	72.5	109	56.4	84.8	36.5	54.9	159	240	128	192
	15	65.4	98.4	51.1	76.8	33.9	50.9	148	222	119	179
	16	58.7	88.2	46.0	69.2	31.2	46.8	136	204	110	166
	17	52.2	78.4	41.1	61.7	28.4	42.6	125	187	101	153
	18	46.5	69.9	36.6	55.0	25.4	38.2	113	171	93.0	140
	19	41.8	62.8	32.9	49.4	22.8	34.3	103	154	84.8	127
	20	37.7	56.6	29.7	44.6	20.6	31.0	92.7	139	76.8	115
	21	34.2	51.4	26.9	40.4	18.7	28.1	84.1	126	69.6	105
	22	31.1	46.8	24.5	36.8	17.0	25.6	76.6	115	63.4	95.4
	23	28.5	42.8	22.4	33.7	15.6	23.4	70.1	105	58.0	87.2
	24	26.2	39.3	20.6	31.0	14.3	21.5	64.4	96.8	53.3	80.1
	25	24.1	36.2	19.0	28.5	13.2	19.8	59.3	89.2	49.1	73.8
	26	22.3	33.5	17.6	26.4	12.2	18.3	54.9	82.5	45.4	68.3
	27	20.7	31.1	16.3	24.5	11.3	17.0	50.9	76.5	42.1	63.3
	28			15.1	22.7	10.5	15.8	47.3	71.1	39.2	58.9
	29							44.1	66.3	36.5	54.9
	30							41.2	61.9	34.1	51.3
	32									30.0	45.1
Properties											
A_g, in.^{2}		5.24		3.98		2.70		9.74		7.58	
I_x, in.^{4}		42.5		33.1		22.9		60.6		49.5	
I_y, in.^{4}		14.4		11.3		7.90		35.6		29.3	
r_y, in.		1.66		1.69		1.71		1.91		1.97	
r_x/r_y		1.72		1.70		1.71		1.31		1.30	

ASD	LRFD
Ω_c = 1.67	ϕ_c = 0.90

[c] Shape is slender for compression with F_y = 46 ksi.

Note: Heavy line indicates KL/r_y equal to or greater than 200.

HSS7

Table 4-3 (continued)
Available Strength in Axial Compression, kips
Rectangular HSS

F_y = 46 ksi

Shape		HSS7×5×								HSS7×4×	
		5/16		1/4		3/16[c]		1/8[c]		1/2	
t_{design}, in.		0.291		0.233		0.174		0.116		0.465	
lb/ft		23.3		19.0		14.5		9.86		31.8	
Design		P_n/Ω_c	$\phi_c P_n$	P_n/Ω_c	$\phi_c P_n$	P_n/Ω_c	$\phi_c P_n$	P_n/Ω_c	$\phi_c P_n$	P_n/Ω_c	$\phi_c P_n$
		ASD	LRFD	ASD	LRFD	ASD	LRFD	ASD	LRFD	ASD	LRFD
Effective length, KL (ft), with respect to least radius of gyration, r_y	0	177	266	144	217	107	161	59.2	89.0	243	365
	6	162	244	133	199	100	151	56.7	85.2	209	314
	7	157	236	128	193	97.9	147	55.8	83.9	198	298
	8	151	228	124	186	94.6	142	54.8	82.3	186	280
	9	145	218	119	179	91.0	137	53.6	80.5	174	261
	10	139	208	114	171	87.1	131	52.2	78.5	160	241
	11	132	198	108	163	82.9	125	50.8	76.3	147	221
	12	125	187	103	154	78.7	118	49.0	73.7	134	201
	13	117	176	96.6	145	74.3	112	47.0	70.6	121	181
	14	110	165	90.6	136	69.8	105	44.8	67.3	108	162
	15	102	154	84.6	127	65.3	98.1	42.5	63.9	95.6	144
	16	94.7	142	78.6	118	60.8	91.3	40.2	60.4	84.1	126
	17	87.3	131	72.7	109	56.3	84.6	37.7	56.7	74.5	112
	18	80.2	121	66.9	101	52.0	78.1	35.2	52.9	66.4	99.9
	19	73.2	110	61.3	92.1	47.7	71.7	32.7	49.1	59.6	89.6
	20	66.4	99.9	55.8	83.9	43.6	65.5	30.1	45.2	53.8	80.9
	21	60.3	90.6	50.6	76.1	39.6	59.5	27.4	41.2	48.8	73.4
	22	54.9	82.5	46.1	69.3	36.1	54.2	25.0	37.5	44.5	66.8
	23	50.2	75.5	42.2	63.4	33.0	49.6	22.8	34.3	40.7	61.2
	24	46.1	69.4	38.7	58.2	30.3	45.6	21.0	31.5	37.4	56.2
	25	42.5	63.9	35.7	53.7	27.9	42.0	19.3	29.0	34.4	51.8
	26	39.3	59.1	33.0	49.6	25.8	38.8	17.9	26.8		
	27	36.5	54.8	30.6	46.0	23.9	36.0	16.6	24.9		
	28	33.9	51.0	28.5	42.8	22.3	33.5	15.4	23.2		
	29	31.6	47.5	26.5	39.9	20.8	31.2	14.4	21.6		
	30	29.5	44.4	24.8	37.3	19.4	29.2	13.4	20.2		
	32	26.0	39.0	21.8	32.8	17.0	25.6	11.8	17.7		
	34					15.1	22.7	10.4	15.7		
Properties											
A_g, in.^{2}		6.43		5.24		3.98		2.70		8.81	
I_x, in.^{4}		43.0		35.9		27.9		19.3		50.7	
I_y, in.^{4}		25.5		21.3		16.6		11.6		20.7	
r_y, in.		1.99		2.02		2.05		2.07		1.53	
r_x/r_y		1.30		1.30		1.29		1.29		1.57	

ASD	LRFD
Ω_c = 1.67	ϕ_c = 0.90

[c] Shape is slender for compression with F_y = 46 ksi.
Note: Heavy line indicates KL/r_y equal to or greater than 200.

F_y = 46 ksi

Table 4-3 (continued)
Available Strength in Axial Compression, kips
Rectangular HSS

HSS7

Shape		HSS7×4×									
		3/8		5/16		1/4		3/16[c]		1/8[c]	
t_{design}, in.		0.349		0.291		0.233		0.174		0.116	
lb/ft		24.9		21.2		17.3		13.3		9.01	
Design		P_n/Ω_c ASD	$\phi_c P_n$ LRFD	P_n/Ω_c ASD	$\phi_c P_n$ LRFD	P_n/Ω_c ASD	$\phi_c P_n$ LRFD	P_n/Ω_c ASD	$\phi_c P_n$ LRFD	P_n/Ω_c ASD	$\phi_c P_n$ LRFD
Effective length, KL (ft), with respect to least radius of gyration, r_y	0	190	285	161	242	131	197	97.7	147	55.1	82.8
	6	165	248	141	212	115	173	88.1	132	50.9	76.4
	7	157	236	134	202	110	166	84.2	127	49.4	74.2
	8	148	222	127	191	104	157	79.8	120	47.7	71.7
	9	138	208	119	179	98.1	148	75.2	113	45.8	68.9
	10	129	193	111	167	91.7	138	70.4	106	43.8	65.8
	11	119	178	103	154	85.0	128	65.3	98.2	41.5	62.4
	12	108	163	94.1	141	78.2	118	60.3	90.6	39.1	58.8
	13	98.4	148	85.7	129	71.5	107	55.2	83.0	36.6	55.0
	14	88.6	133	77.5	116	64.9	97.5	50.2	75.5	33.9	51.0
	15	79.2	119	69.5	104	58.4	87.8	45.3	68.1	31.2	46.9
	16	70.0	105	61.8	92.9	52.3	78.5	40.7	61.1	28.3	42.6
	17	62.0	93.2	54.8	82.3	46.3	69.6	36.1	54.3	25.4	38.1
	18	55.3	83.2	48.9	73.4	41.3	62.1	32.2	48.4	22.6	34.0
	19	49.7	74.6	43.8	65.9	37.1	55.8	28.9	43.5	20.3	30.5
	20	44.8	67.4	39.6	59.5	33.5	50.3	26.1	39.2	18.3	27.6
	21	40.7	61.1	35.9	53.9	30.4	45.6	23.7	35.6	16.6	25.0
	22	37.0	55.7	32.7	49.2	27.7	41.6	21.6	32.4	15.2	22.8
	23	33.9	50.9	29.9	45.0	25.3	38.0	19.7	29.7	13.9	20.8
	24	31.1	46.8	27.5	41.3	23.2	34.9	18.1	27.2	12.7	19.1
	25	28.7	43.1	25.3	38.1	21.4	32.2	16.7	25.1	11.7	17.6
	26	26.5	39.9	23.4	35.2	19.8	29.8	15.4	23.2	10.8	16.3
	27					18.4	27.6	14.3	21.5	10.1	15.1
	28									9.35	14.1

Properties					
A_g, in.^{2}	6.88	5.85	4.77	3.63	2.46
I_x, in.^{4}	41.8	36.5	30.5	23.8	16.6
I_y, in.^{4}	17.3	15.2	12.8	10.0	7.03
r_y, in.	1.58	1.61	1.64	1.66	1.69
r_x/r_y	1.56	1.55	1.54	1.54	1.53

ASD	LRFD
Ω_c = 1.67	ϕ_c = 0.90

[c] Shape is slender for compression with F_y = 46 ksi.
Note: Heavy line indicates KL/r_y equal to or greater than 200.

HSS6

Table 4-3 (continued)
Available Strength in Axial Compression, kips
Rectangular HSS

F_y = 46 ksi

Shape		HSS6×5×											
		1/2		3/8		5/16		1/4		3/16		1/8[c]	
t_{design}, in.		0.465		0.349		0.291		0.233		0.174		0.116	
lb/ft		31.8		24.9		21.2		17.3		13.3		9.01	
Design		P_n/Ω_c	$\phi_c P_n$	P_n/Ω_c	$\phi_c P_n$	P_n/Ω_c	$\phi_c P_n$	P_n/Ω_c	$\phi_c P_n$	P_n/Ω_c	$\phi_c P_n$	P_n/Ω_c	$\phi_c P_n$
		ASD	LRFD	ASD	LRFD	ASD	LRFD	ASD	LRFD	ASD	LRFD	ASD	LRFD
Effective length, KL (ft), with respect to least radius of gyration, r_y	0	243	365	190	285	161	242	131	197	100	150	57.9	87.0
	1	242	364	189	284	161	242	131	197	99.7	150	57.8	86.9
	2	240	361	188	282	160	240	130	196	99.0	149	57.5	86.6
	3	237	356	185	278	157	237	128	193	97.9	147	57.2	86.0
	4	232	349	182	273	155	233	126	190	96.2	145	56.7	85.2
	5	226	340	177	267	151	227	124	186	94.2	142	56.0	84.2
	6	220	330	172	259	147	221	120	181	91.7	138	55.2	82.9
	7	212	318	167	250	142	214	116	175	88.9	134	54.2	81.4
	8	203	305	160	241	137	206	112	169	85.8	129	53.0	79.7
	9	194	291	153	230	131	197	108	162	82.3	124	51.7	77.7
	10	184	276	146	219	125	188	103	154	78.7	118	50.2	75.5
	11	174	261	138	207	118	178	97.4	146	74.8	112	48.6	73.0
	12	163	245	130	195	112	168	92.1	138	70.8	106	46.5	69.8
	13	152	228	122	183	105	157	86.5	130	66.7	100	44.2	66.5
	14	141	212	113	170	97.8	147	81.0	122	62.5	93.9	41.9	63.0
	15	130	196	105	158	90.8	137	75.4	113	58.3	87.6	39.5	59.3
	16	119	179	96.7	145	83.9	126	69.8	105	54.1	81.3	37.0	55.6
	17	109	164	88.7	133	77.2	116	64.3	96.7	50.0	75.2	34.4	51.6
	18	98.9	149	80.9	122	70.6	106	59.0	88.7	46.0	69.1	31.6	47.6
	19	89.1	134	73.3	110	64.2	96.6	53.8	80.9	42.1	63.2	29.0	43.6
	20	80.4	121	66.2	99.5	58.0	87.2	48.6	73.3	38.3	57.5	26.5	39.8
	21	72.9	110	60.0	90.2	52.7	79.1	44.3	66.5	34.7	52.2	24.0	36.1
	22	66.4	99.9	54.7	82.2	48.0	72.1	40.3	60.6	31.6	47.5	21.9	32.9
	23	60.8	91.4	50.0	75.2	43.9	66.0	36.9	55.5	28.9	43.5	20.0	30.1
	24	55.8	83.9	46.0	69.1	40.3	60.6	33.9	50.9	26.6	39.9	18.3	27.6
	25	51.5	77.3	42.4	63.7	37.2	55.8	31.2	46.9	24.5	36.8	16.9	25.4
	26	47.6	71.5	39.2	58.9	34.3	51.6	28.9	43.4	22.6	34.0	15.7	23.5
	27	44.1	66.3	36.3	54.6	31.9	47.9	26.8	40.2	21.0	31.6	14.5	21.8
	28	41.0	61.6	33.8	50.8	29.6	44.5	24.9	37.4	19.5	29.3	13.5	20.3
	29	38.2	57.5	31.5	47.3	27.6	41.5	23.2	34.9	18.2	27.4	12.6	18.9
	30	35.7	53.7	29.4	44.2	25.8	38.8	21.7	32.6	17.0	25.6	11.8	17.7
Properties													
A_g, in.^{2}		8.81		6.88		5.85		4.77		3.63		2.46	
I_x, in.^{4}		41.1		33.9		29.6		24.7		19.3		13.4	
I_y, in.^{4}		30.8		25.5		22.3		18.7		14.6		10.2	
r_y, in.		1.87		1.92		1.95		1.98		2.01		2.03	
r_x/r_y		1.16		1.16		1.15		1.15		1.15		1.15	

ASD	LRFD
Ω_c = 1.67	ϕ_c = 0.90

[c] Shape is slender for compression with F_y = 46 ksi.

F_y = 46 ksi

Table 4-3 (continued)
Available Strength in Axial Compression, kips
Rectangular HSS

HSS6

Shape		HSS6×4×											
		1/2		3/8		5/16		1/4		3/16		1/8[c]	
t_{design}, in.		0.465		0.349		0.291		0.233		0.174		0.116	
lb/ft		28.4		22.4		19.1		15.6		12.0		8.16	
Design		P_n/Ω_c ASD	$\phi_c P_n$ LRFD	P_n/Ω_c ASD	$\phi_c P_n$ LRFD	P_n/Ω_c ASD	$\phi_c P_n$ LRFD	P_n/Ω_c ASD	$\phi_c P_n$ LRFD	P_n/Ω_c ASD	$\phi_c P_n$ LRFD	P_n/Ω_c ASD	$\phi_c P_n$ LRFD
Effective length, KL (ft), with respect to least radius of gyration, r_y	0	217	326	170	256	145	218	118	178	90.3	136	54.1	81.3
	1	216	325	170	255	144	217	118	177	90.0	135	53.9	81.0
	2	213	321	168	252	143	214	117	175	89.0	134	53.5	80.4
	3	209	314	164	247	140	210	115	172	87.4	131	52.9	79.5
	4	203	305	160	240	136	205	112	168	85.2	128	51.9	78.1
	5	195	293	154	231	131	198	108	162	82.5	124	50.8	76.3
	6	186	279	147	221	126	189	104	156	79.2	119	49.4	74.2
	7	176	264	140	210	120	180	98.6	148	75.6	114	47.7	71.7
	8	165	248	132	198	113	170	93.2	140	71.5	108	45.8	68.9
	9	153	230	123	185	106	159	87.5	132	67.2	101	43.8	65.8
	10	141	212	114	171	98.3	148	81.5	123	62.7	94.3	41.5	62.4
	11	129	194	105	157	90.6	136	75.4	113	58.1	87.4	39.1	58.7
	12	117	176	95.3	143	82.9	125	69.2	104	53.4	80.3	36.5	54.8
	13	105	158	86.1	129	75.2	113	63.0	94.7	48.8	73.3	33.7	50.7
	14	93.3	140	77.2	116	67.7	102	56.9	85.6	44.2	66.5	30.8	46.4
	15	82.3	124	68.7	103	60.5	91.0	51.1	76.8	39.8	59.8	27.9	41.9
	16	72.3	109	60.5	91.0	53.5	80.5	45.4	68.3	35.5	53.4	25.0	37.5
	17	64.0	96.2	53.6	80.6	47.4	71.3	40.3	60.5	31.5	47.3	22.2	33.4
	18	57.1	85.9	47.8	71.9	42.3	63.6	35.9	54.0	28.1	42.2	19.8	29.8
	19	51.3	77.1	42.9	64.5	38.0	57.1	32.2	48.4	25.2	37.9	17.8	26.7
	20	46.3	69.5	38.7	58.2	34.3	51.5	29.1	43.7	22.7	34.2	16.0	24.1
	21	42.0	63.1	35.1	52.8	31.1	46.7	26.4	39.7	20.6	31.0	14.5	21.9
	22	38.2	57.5	32.0	48.1	28.3	42.6	24.0	36.1	18.8	28.2	13.3	19.9
	23	35.0	52.6	29.3	44.0	25.9	38.9	22.0	33.1	17.2	25.8	12.1	18.2
	24	32.1	48.3	26.9	40.4	23.8	35.8	20.2	30.4	15.8	23.7	11.1	16.7
	25	29.6	44.5	24.8	37.3	21.9	33.0	18.6	28.0	14.6	21.9	10.3	15.4
	26					20.3	30.5	17.2	25.9	13.5	20.2	9.49	14.3
	27									12.5	18.8	8.80	13.2
Properties													
A_g, in.^{2}		7.88		6.18		5.26		4.30		3.28		2.23	
I_x, in.^{4}		34.0		28.3		24.8		20.9		16.4		11.4	
I_y, in.^{4}		17.8		14.9		13.2		11.1		8.76		6.15	
r_y, in.		1.50		1.55		1.58		1.61		1.63		1.66	
r_x/r_y		1.39		1.38		1.37		1.37		1.37		1.36	

ASD	LRFD
Ω_c = 1.67	ϕ_c = 0.90

[c] Shape is slender for compression with F_y = 46 ksi.
Note: Heavy line indicates KL/r_y equal to or greater than 200.

HSS6

Table 4-3 (continued)
Available Strength in Axial Compression, kips
Rectangular HSS

F_y = 46 ksi

Shape		HSS6×3×											
		1/2		3/8		5/16		1/4		3/16		1/8[c]	
t_{design}, in.		0.465		0.349		0.291		0.233		0.174		0.116	
lb/ft		25.0		19.8		17.0		13.9		10.7		7.31	
Design		P_n/Ω_c ASD	$\phi_c P_n$ LRFD	P_n/Ω_c ASD	$\phi_c P_n$ LRFD	P_n/Ω_c ASD	$\phi_c P_n$ LRFD	P_n/Ω_c ASD	$\phi_c P_n$ LRFD	P_n/Ω_c ASD	$\phi_c P_n$ LRFD	P_n/Ω_c ASD	$\phi_c P_n$ LRFD
Effective length, KL (ft), with respect to least radius of gyration, r_y	0	191	288	151	227	129	194	106	159	80.7	121	47.7	71.7
	1	190	286	150	225	128	192	105	158	80.2	121	47.5	71.4
	2	186	279	147	221	125	189	103	155	78.7	118	47.0	70.6
	3	179	268	142	213	121	182	99.8	150	76.3	115	46.0	69.2
	4	169	254	135	203	116	174	95.3	143	73.1	110	44.7	67.2
	5	158	237	126	190	109	163	89.9	135	69.1	104	43.0	64.7
	6	145	218	117	176	101	151	83.7	126	64.6	97.0	41.0	61.6
	7	131	197	107	160	92.2	139	76.9	116	59.6	89.5	38.7	58.1
	8	117	176	96.0	144	83.2	125	69.7	105	54.3	81.6	36.1	54.2
	9	102	154	85.1	128	74.1	111	62.4	93.8	48.8	73.4	33.2	49.9
	10	88.4	133	74.4	112	65.0	97.8	55.2	82.9	43.4	65.3	30.1	45.2
	11	75.2	113	64.1	96.4	56.3	84.7	48.1	72.3	38.1	57.3	26.6	40.0
	12	63.2	95.0	54.4	81.7	48.0	72.2	41.4	62.3	33.1	49.7	23.2	34.9
	13	53.8	80.9	46.3	69.6	40.9	61.5	35.3	53.1	28.3	42.5	19.9	29.9
	14	46.4	69.8	39.9	60.0	35.3	53.0	30.4	45.7	24.4	36.6	17.2	25.8
	15	40.4	60.8	34.8	52.3	30.7	46.2	26.5	39.9	21.2	31.9	15.0	22.5
	16	35.5	53.4	30.6	46.0	27.0	40.6	23.3	35.0	18.7	28.1	13.2	19.8
	17	31.5	47.3	27.1	40.7	23.9	36.0	20.6	31.0	16.5	24.9	11.7	17.5
	18	28.1	42.2	24.2	36.3	21.4	32.1	18.4	27.7	14.7	22.2	10.4	15.6
	19			21.7	32.6	19.2	28.8	16.5	24.8	13.2	19.9	9.33	14.0
	20							14.9	22.4	11.9	18.0	8.42	12.7
	21											7.64	11.5
Properties													
A_g, in.^{2}		6.95		5.48		4.68		3.84		2.93		2.00	
I_x, in.^{4}		26.8		22.7		20.1		17.0		13.4		9.43	
I_y, in.^{4}		8.69		7.48		6.67		5.70		4.55		3.23	
r_y, in.		1.12		1.17		1.19		1.22		1.25		1.27	
r_x/r_y		1.76		1.74		1.74		1.72		1.71		1.71	

ASD	LRFD
Ω_c = 1.67	ϕ_c = 0.90

[c] Shape is slender for compression with F_y = 46 ksi.

Note: Heavy line indicates KL/r_y equal to or greater than 200.

Table 4-3 (continued)

Available Strength in Axial Compression, kips

Rectangular HSS

F_y = 46 ksi

HSS5

Shape		HSS5×4×											
		1/2		3/8		5/16		1/4		3/16		1/8[c]	
t_{design}, in.		0.465		0.349		0.291		0.233		0.174		0.116	
lb/ft		25.0		19.8		17.0		13.9		10.7		7.31	
Design		P_n/Ω_c ASD	$\phi_c P_n$ LRFD	P_n/Ω_c ASD	$\phi_c P_n$ LRFD	P_n/Ω_c ASD	$\phi_c P_n$ LRFD	P_n/Ω_c ASD	$\phi_c P_n$ LRFD	P_n/Ω_c ASD	$\phi_c P_n$ LRFD	P_n/Ω_c ASD	$\phi_c P_n$ LRFD
Effective length, KL (ft), with respect to least radius of gyration, r_y	0	191	288	151	227	129	194	106	159	80.7	121	52.6	79.1
	1	191	286	150	226	128	193	105	158	80.4	121	52.4	78.8
	2	188	283	148	223	127	191	104	156	79.5	119	52.0	78.1
	3	184	276	145	218	124	187	102	153	78.0	117	51.2	77.0
	4	178	268	141	212	121	181	99.3	149	76.0	114	50.2	75.4
	5	171	257	136	204	116	175	95.9	144	73.4	110	48.9	73.4
	6	163	244	130	195	111	167	91.8	138	70.4	106	47.3	71.0
	7	153	230	123	185	106	159	87.2	131	67.0	101	45.4	68.3
	8	143	215	115	173	99.3	149	82.3	124	63.3	95.2	43.3	65.1
	9	132	199	107	162	92.6	139	76.9	116	59.4	89.3	40.9	61.4
	10	122	183	99.3	149	85.7	129	71.4	107	55.3	83.1	38.1	57.2
	11	110	166	90.9	137	78.6	118	65.7	98.8	51.1	76.7	35.2	53.0
	12	99.5	150	82.5	124	71.6	108	60.1	90.3	46.8	70.3	32.4	48.7
	13	88.8	133	74.3	112	64.6	97.2	54.4	81.8	42.6	64.0	29.5	44.4
	14	78.6	118	66.4	99.7	57.9	87.0	49.0	73.6	38.4	57.8	26.7	40.2
	15	68.7	103	58.7	88.3	51.4	77.3	43.7	65.7	34.4	51.8	24.0	36.1
	16	60.4	90.8	51.6	77.6	45.3	68.0	38.6	58.0	30.6	46.0	21.4	32.2
	17	53.5	80.4	45.7	68.7	40.1	60.3	34.2	51.4	27.1	40.7	19.0	28.5
	18	47.7	71.7	40.8	61.3	35.8	53.7	30.5	45.8	24.2	36.3	16.9	25.4
	19	42.8	64.4	36.6	55.0	32.1	48.2	27.4	41.1	21.7	32.6	15.2	22.8
	20	38.7	58.1	33.0	49.7	29.0	43.5	24.7	37.1	19.6	29.4	13.7	20.6
	21	35.1	52.7	30.0	45.0	26.3	39.5	22.4	33.7	17.8	26.7	12.4	18.7
	22	31.9	48.0	27.3	41.0	23.9	36.0	20.4	30.7	16.2	24.3	11.3	17.0
	23	29.2	43.9	25.0	37.5	21.9	32.9	18.7	28.1	14.8	22.2	10.4	15.6
	24	26.8	40.4	22.9	34.5	20.1	30.2	17.2	25.8	13.6	20.4	9.51	14.3
	25			21.1	31.8	18.5	27.9	15.8	23.8	12.5	18.8	8.77	13.2
	26							14.6	22.0	11.6	17.4	8.10	12.2
	27											7.52	11.3
Properties													
A_g, in.^{2}		6.95		5.48		4.68		3.84		2.93		2.00	
I_x, in.^{4}		21.2		17.9		15.8		13.4		10.6		7.42	
I_y, in.^{4}		14.9		12.6		11.1		9.46		7.48		5.27	
r_y, in.		1.46		1.52		1.54		1.57		1.60		1.62	
r_x/r_y		1.20		1.19		1.19		1.19		1.19		1.19	

ASD	LRFD
Ω_c = 1.67	ϕ_c = 0.90

[c] Shape is slender for compression with F_y = 46 ksi.

Note: Heavy line indicates KL/r_y equal to or greater than 200.

HSS5

Table 4-3 (continued)
Available Strength in Axial Compression, kips
Rectangular HSS

F_y = 46 ksi

Shape		HSS5×3×											
		1/2		3/8		5/16		1/4		3/16		1/8[c]	
t_{design}, in.		0.465		0.349		0.291		0.233		0.174		0.116	
lb/ft		21.6		17.3		14.8		12.2		9.42		6.46	
Design		P_n/Ω_c ASD	$\phi_c P_n$ LRFD	P_n/Ω_c ASD	$\phi_c P_n$ LRFD	P_n/Ω_c ASD	$\phi_c P_n$ LRFD	P_n/Ω_c ASD	$\phi_c P_n$ LRFD	P_n/Ω_c ASD	$\phi_c P_n$ LRFD	P_n/Ω_c ASD	$\phi_c P_n$ LRFD
Effective length, KL (ft), with respect to least radius of gyration, r_y	0	166	249	132	198	113	170	92.8	140	71.1	107	46.3	69.5
	1	164	247	131	196	112	169	92.2	139	70.8	106	46.0	69.2
	2	160	241	128	192	110	165	90.3	136	69.2	104	45.4	68.2
	3	154	232	123	185	106	159	87.3	131	67.0	101	44.3	66.6
	4	146	219	117	176	101	152	83.2	125	64.0	96.2	42.8	64.4
	5	135	203	109	164	94.6	142	78.2	118	60.4	90.8	41.0	61.6
	6	124	186	101	151	87.5	132	72.6	109	56.2	84.5	38.7	58.2
	7	111	167	91.4	137	79.8	120	66.4	99.8	51.7	77.6	36.0	54.1
	8	98.4	148	81.7	123	71.8	108	59.9	90.1	46.9	70.4	32.8	49.3
	9	85.7	129	72.0	108	63.7	95.7	53.3	80.2	41.9	63.0	29.5	44.3
	10	73.4	110	62.5	93.9	55.7	83.7	46.8	70.4	37.1	55.7	26.2	39.4
	11	61.7	92.7	53.4	80.3	48.0	72.1	40.6	61.0	32.3	48.6	23.0	34.6
	12	51.8	77.9	45.0	67.7	40.7	61.1	34.6	52.0	27.8	41.8	20.0	30.0
	13	44.2	66.4	38.4	57.7	34.7	52.1	29.5	44.3	23.7	35.6	17.1	25.7
	14	38.1	57.2	33.1	49.7	29.9	44.9	25.4	38.2	20.5	30.7	14.7	22.1
	15	33.2	49.9	28.8	43.3	26.0	39.1	22.1	33.3	17.8	26.8	12.8	19.3
	16	29.2	43.8	25.3	38.1	22.9	34.4	19.5	29.2	15.7	23.5	11.3	16.9
	17	25.8	38.8	22.4	33.7	20.3	30.5	17.2	25.9	13.9	20.8	9.99	15.0
	18	23.0	34.6	20.0	30.1	18.1	27.2	15.4	23.1	12.4	18.6	8.91	13.4
	19			18.0	27.0	16.2	24.4	13.8	20.7	11.1	16.7	8.00	12.0
	20									10.0	15.1	7.22	10.8
Properties													
A_g, in.^{2}		6.02		4.78		4.10		3.37		2.58		1.77	
I_x, in.^{4}		16.4		14.1		12.6		10.7		8.53		6.03	
I_y, in.^{4}		7.18		6.25		5.60		4.81		3.85		2.75	
r_y, in.		1.09		1.14		1.17		1.19		1.22		1.25	
r_x/r_y		1.51		1.51		1.50		1.50		1.49		1.48	

ASD	LRFD
Ω_c = 1.67	ϕ_c = 0.90

[c] Shape is slender for compression with F_y = 46 ksi.
Note: Heavy line indicates KL/r_y equal to or greater than 200.

F_y = 46 ksi

Table 4-3 (continued)
Available Strength in Axial Compression, kips
Rectangular HSS

HSS5-HSS4

Shape		HSS5×2½×						HSS4×3×					
		1/4		3/16		1/8[c]		3/8		5/16		1/4	
t_{design}, in.		0.233		0.174		0.116		0.349		0.291		0.233	
lb/ft		11.4		8.78		6.03		14.7		12.7		10.5	
Design		P_n/Ω_c	$\phi_c P_n$	P_n/Ω_c	$\phi_c P_n$	P_n/Ω_c	$\phi_c P_n$	P_n/Ω_c	$\phi_c P_n$	P_n/Ω_c	$\phi_c P_n$	P_n/Ω_c	$\phi_c P_n$
		ASD	LRFD	ASD	LRFD	ASD	LRFD	ASD	LRFD	ASD	LRFD	ASD	LRFD
Effective length, KL (ft), with respect to least radius of gyration, r_y	0	86.5	130	66.4	99.8	43.0	64.6	113	169	97.0	146	80.2	120
	1	85.7	129	65.8	98.8	42.7	64.1	112	168	96.2	145	79.6	120
	2	83.2	125	64.0	96.1	41.8	62.9	109	164	94.1	141	77.9	117
	3	79.3	119	61.0	91.7	40.5	60.8	105	158	90.6	136	75.1	113
	4	74.0	111	57.2	86.0	38.6	58.0	99.3	149	85.9	129	71.4	107
	5	67.8	102	52.6	79.0	36.2	54.4	92.5	139	80.2	121	66.9	101
	6	61.0	91.7	47.5	71.4	33.1	49.8	84.9	128	73.8	111	61.9	93.0
	7	53.8	80.8	42.1	63.2	29.5	44.4	76.6	115	66.9	100	56.3	84.7
	8	46.5	69.8	36.6	55.0	25.9	38.9	68.1	102	59.7	89.7	50.6	76.0
	9	39.4	59.2	31.2	46.9	22.3	33.5	59.6	89.6	52.4	78.8	44.7	67.2
	10	32.7	49.2	26.2	39.3	18.9	28.4	51.3	77.1	45.4	68.2	39.0	58.6
	11	27.0	40.6	21.6	32.5	15.7	23.6	43.5	65.3	38.7	58.2	33.5	50.4
	12	22.7	34.1	18.2	27.3	13.2	19.8	36.5	54.9	32.6	49.0	28.4	42.7
	13	19.4	29.1	15.5	23.3	11.2	16.9	31.1	46.8	27.8	41.7	24.2	36.3
	14	16.7	25.1	13.4	20.1	9.69	14.6	26.8	40.3	23.9	36.0	20.9	31.3
	15	14.5	21.9	11.6	17.5	8.44	12.7	23.4	35.1	20.9	31.3	18.2	27.3
	16	12.8	19.2	10.2	15.4	7.42	11.1	20.5	30.9	18.3	27.5	16.0	24.0
	17			9.06	13.6	6.57	9.88	18.2	27.4	16.2	24.4	14.1	21.3
	18							16.2	24.4	14.5	21.8	12.6	19.0
	19											11.3	17.0
Properties													
A_g, in.^{2}		3.14		2.41		1.65		4.09		3.52		2.91	
I_x, in.^{4}		9.40		7.51		5.34		7.93		7.14		6.15	
I_y, in.^{4}		3.13		2.53		1.82		5.01		4.52		3.91	
r_y, in.		0.999		1.02		1.05		1.11		1.13		1.16	
r_x/r_y		1.73		1.74		1.71		1.25		1.26		1.25	

ASD	LRFD
Ω_c = 1.67	ϕ_c = 0.90

[c] Shape is slender for compression with F_y = 46 ksi.
Note: Heavy line indicates KL/r_y equal to or greater than 200.

HSS4

Table 4-3 (continued)
Available Strength in Axial Compression, kips
Rectangular HSS

F_y = 46 ksi

Shape		HSS4×3×				HSS4×2½×							
		3/16		1/8		3/8		5/16		1/4		3/16	
t_{design}, in.		0.174		0.116		0.349		0.291		0.233		0.174	
lb/ft		8.15		5.61		13.4		11.6		9.66		7.51	
Design		P_n/Ω_c	$\phi_c P_n$	P_n/Ω_c	$\phi_c P_n$	P_n/Ω_c	$\phi_c P_n$	P_n/Ω_c	$\phi_c P_n$	P_n/Ω_c	$\phi_c P_n$	P_n/Ω_c	$\phi_c P_n$
		ASD	LRFD	ASD	LRFD	ASD	LRFD	ASD	LRFD	ASD	LRFD	ASD	LRFD
Effective length, KL (ft), with respect to least radius of gyration, r_y	0	61.7	92.7	42.4	63.8	103	155	89.0	134	73.5	111	56.7	85.3
	1	61.3	92.1	42.1	63.3	102	153	88.0	132	72.8	109	56.2	84.5
	2	60.0	90.2	41.3	62.1	98.4	148	85.2	128	70.6	106	54.6	82.0
	3	58.0	87.2	40.0	60.1	93.0	140	80.7	121	67.1	101	52.0	78.1
	4	55.3	83.1	38.2	57.3	85.8	129	74.8	112	62.4	93.8	48.6	73.0
	5	52.0	78.2	36.0	54.0	77.5	116	67.9	102	56.9	85.6	44.5	66.9
	6	48.2	72.5	33.4	50.2	68.4	103	60.3	90.6	50.9	76.5	40.0	60.1
	7	44.1	66.3	30.7	46.1	58.9	88.6	52.4	78.8	44.5	67.0	35.3	53.0
	8	39.8	59.9	27.8	41.7	49.7	74.7	44.6	67.0	38.2	57.4	30.5	45.8
	9	35.5	53.3	24.8	37.3	40.9	61.5	37.1	55.7	32.1	48.3	25.9	38.9
	10	31.1	46.8	21.9	32.9	33.2	49.9	30.2	45.4	26.4	39.7	21.5	32.3
	11	27.0	40.5	19.0	28.6	27.4	41.2	25.0	37.6	21.8	32.8	17.7	26.7
	12	23.0	34.6	16.3	24.6	23.0	34.6	21.0	31.6	18.3	27.5	14.9	22.4
	13	19.6	29.4	13.9	20.9	19.6	29.5	17.9	26.9	15.6	23.5	12.7	19.1
	14	16.9	25.4	12.0	18.0	16.9	25.4	15.4	23.2	13.5	20.2	10.9	16.5
	15	14.7	22.1	10.5	15.7	14.7	22.2	13.4	20.2	11.7	17.6	9.54	14.3
	16	12.9	19.4	9.19	13.8					10.3	15.5	8.38	12.6
	17	11.5	17.2	8.14	12.2								
	18	10.2	15.4	7.26	10.9								
	19	9.17	13.8	6.52	9.80								
	20			5.88	8.84								
Properties													
A_g, in.^{2}		2.24		1.54		3.74		3.23		2.67		2.06	
I_x, in.^{4}		4.93		3.52		6.77		6.13		5.32		4.30	
I_y, in.^{4}		3.16		2.27		3.17		2.89		2.53		2.06	
r_y, in.		1.19		1.21		0.922		0.947		0.973		0.999	
r_x/r_y		1.25		1.26		1.46		1.46		1.45		1.44	

ASD	LRFD
Ω_c = 1.67	ϕ_c = 0.90

Note: Heavy line indicates KL/r_y equal to or greater than 200.

F_y = 46 ksi

Table 4-3 (continued)
Available Strength in Axial Compression, kips
Rectangular HSS

HSS4

Shape		HSS4×2½×		HSS4×2×									
		1/8		3/8		5/16		1/4		3/16		1/8	
t_{design}, in.		0.116		0.349		0.291		0.233		0.174		0.116	
lb/ft		5.18		12.2		10.6		8.81		6.87		4.75	
Design		P_n/Ω_c	$\phi_c P_n$	P_n/Ω_c	$\phi_c P_n$	P_n/Ω_c	$\phi_c P_n$	P_n/Ω_c	$\phi_c P_n$	P_n/Ω_c	$\phi_c P_n$	P_n/Ω_c	$\phi_c P_n$
		ASD	LRFD	ASD	LRFD	ASD	LRFD	ASD	LRFD	ASD	LRFD	ASD	LRFD
Effective length, KL (ft), with respect to least radius of gyration, r_y	0	39.1	58.8	93.4	140	81.0	122	67.2	101	52.1	78.2	35.8	53.8
	1	38.8	58.3	91.7	138	79.6	120	66.1	99.4	51.3	77.1	35.3	53.1
	2	37.7	56.7	86.8	130	75.6	114	63.0	94.8	49.0	73.7	33.8	50.9
	3	36.0	54.1	79.2	119	69.5	104	58.2	87.5	45.5	68.4	31.5	47.4
	4	33.8	50.8	69.7	105	61.7	92.7	52.1	78.2	41.0	61.6	28.6	43.0
	5	31.1	46.8	59.2	89.0	52.9	79.5	45.1	67.8	35.8	53.8	25.2	37.9
	6	28.2	42.3	48.4	72.8	43.9	65.9	37.8	56.9	30.4	45.6	21.6	32.4
	7	25.0	37.6	38.2	57.5	35.1	52.8	30.7	46.2	25.0	37.5	18.0	27.0
	8	21.8	32.8	29.4	44.2	27.3	41.0	24.1	36.3	19.9	29.9	14.6	21.9
	9	18.7	28.1	23.2	34.9	21.5	32.4	19.1	28.7	15.7	23.7	11.5	17.3
	10	15.7	23.6	18.8	28.3	17.4	26.2	15.5	23.2	12.8	19.2	9.35	14.1
	11	13.0	19.5	15.5	23.4	14.4	21.7	12.8	19.2	10.5	15.8	7.73	11.6
	12	10.9	16.4	13.1	19.6	12.1	18.2	10.7	16.1	8.86	13.3	6.49	9.76
	13	9.30	14.0							7.55	11.3	5.53	8.31
	14	8.02	12.1										
	15	6.99	10.5										
	16	6.14	9.23										
	17	5.44	8.18										
Properties													
A_g, in.^{2}		1.42		3.39		2.94		2.44		1.89		1.30	
I_x, in.^{4}		3.09		5.60		5.13		4.49		3.66		2.65	
I_y, in.^{4}		1.49		1.80		1.67		1.48		1.22		0.898	
r_y, in.		1.03		0.729		0.754		0.779		0.804		0.830	
r_x/r_y		1.43		1.77		1.75		1.75		1.73		1.72	

ASD	LRFD
Ω_c = 1.67	ϕ_c = 0.90

Note: Heavy line indicates KL/r_y equal to or greater than 200.

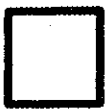

HSS16-HSS14

Table 4-4
Available Strength in Axial Compression, kips
Square HSS

F_y = 46 ksi

Shape		HSS16×16×						HSS14×14×					
		1/2		3/8[c]		5/16[c]		5/8		1/2		3/8[c]	
t_{design}, in.		0.465		0.349		0.291		0.581		0.465		0.349	
lb/ft		103		78.5		65.9		110		89.7		68.3	
Design		P_n/Ω_c	$\phi_c P_n$	P_n/Ω_c	$\phi_c P_n$	P_n/Ω_c	$\phi_c P_n$	P_n/Ω_c	$\phi_c P_n$	P_n/Ω_c	$\phi_c P_n$	P_n/Ω_c	$\phi_c P_n$
		ASD	LRFD	ASD	LRFD	ASD	LRFD	ASD	LRFD	ASD	LRFD	ASD	LRFD
Effective length, KL (ft), with respect to least radius of gyration, r_y	0	780	1170	521	782	381	572	835	1250	678	1020	498	748
	6	773	1160	518	779	379	570	825	1240	670	1010	494	743
	7	770	1160	517	777	379	569	821	1230	667	1000	493	741
	8	767	1150	516	776	378	568	817	1230	664	998	491	738
	9	764	1150	515	774	377	567	813	1220	660	992	489	736
	10	761	1140	513	772	376	566	808	1210	656	986	487	733
	11	757	1140	512	769	375	564	802	1210	652	980	485	729
	12	753	1130	510	767	374	563	796	1200	647	972	483	726
	13	748	1120	508	764	373	561	790	1190	642	965	480	722
	14	743	1120	506	761	372	559	783	1180	636	956	477	718
	15	738	1110	504	758	371	557	775	1170	630	947	474	713
	16	732	1100	502	755	370	555	768	1150	624	938	471	708
	17	727	1090	500	751	368	553	759	1140	618	928	468	703
	18	720	1080	497	747	367	551	751	1130	611	918	464	697
	19	714	1070	495	743	365	549	742	1110	603	907	460	691
	20	707	1060	492	739	363	546	732	1100	596	896	454	683
	21	700	1050	489	735	361	543	722	1090	588	884	448	674
	22	693	1040	486	730	360	540	712	1070	580	872	442	665
	23	685	1030	482	725	358	537	702	1050	572	859	436	656
	24	678	1020	479	720	356	534	691	1040	563	846	430	646
	25	670	1010	475	714	353	531	680	1020	554	833	423	636
	26	661	994	472	709	351	528	669	1010	545	820	416	626
	27	653	981	468	703	349	524	657	988	536	806	410	616
	28	644	968	464	697	346	520	646	970	527	792	403	605
	29	635	955	459	691	344	517	634	953	517	777	395	594
	30	626	941	455	684	341	513	622	934	507	763	388	583
	32	608	913	446	670	336	504	597	897	488	733	373	561
	34	588	884	436	656	330	495	572	859	467	702	358	538
	36	569	855	426	640	323	486	546	821	447	671	343	515
	38	549	825	415	623	316	476	520	782	426	640	327	492
	40	528	794	403	606	309	465	494	743	405	609	311	468
Properties													
A_g, in.^{2}		28.3		21.5		18.1		30.3		24.6		18.7	
$I_x = I_y$, in.^{4}		1130		873		739		897		743		577	
$r_x = r_y$, in.		6.31		6.37		6.39		5.44		5.49		5.55	

ASD	LRFD
$\Omega_c = 1.67$	$\phi_c = 0.90$

[c] Shape is slender for compression with F_y = 46 ksi.

Table 4-4 (continued)

Available Strength in Axial Compression, kips

Square HSS

F_y = 46 ksi

HSS14-HSS12

Shape		HSS14×14×		HSS12×12×									
		5/16[c]		5/8		1/2		3/8		5/16[c]		1/4[c]	
t_{design}, in.		0.291		0.581		0.465		0.349		0.291		0.233	
lb/ft		57.4		93.3		76.1		58.1		48.9		39.4	
Design		P_a/Ω_c	$\phi_c P_n$	P_a/Ω_c	$\phi_c P_n$	P_a/Ω_c	$\phi_c P_n$	P_a/Ω_c	$\phi_c P_n$	P_a/Ω_c	$\phi_c P_n$	P_a/Ω_c	$\phi_c P_n$
		ASD	LRFD	ASD	LRFD	ASD	LRFD	ASD	LRFD	ASD	LRFD	ASD	LRFD
Effective length, KL (ft), with respect to least radius of gyration, r_y	0	366	551	708	1060	576	865	441	662	350	526	239	359
	6	364	547	696	1050	567	852	434	652	347	521	237	356
	7	363	546	692	1040	563	847	431	648	345	519	236	355
	8	362	545	688	1030	560	841	429	644	344	517	236	354
	9	361	543	682	1030	555	835	426	640	342	515	235	353
	10	360	541	676	1020	551	828	422	634	340	512	234	351
	11	359	539	670	1010	546	820	418	629	338	509	233	350
	12	357	537	663	997	540	812	414	622	336	505	232	348
	13	356	535	656	985	534	803	410	616	334	502	230	346
	14	354	532	648	973	528	793	405	609	331	498	229	344
	15	352	529	639	961	521	783	400	601	328	494	227	342
	16	350	526	630	947	514	773	394	593	325	489	226	339
	17	348	523	621	933	507	761	389	584	322	484	224	337
	18	346	520	611	918	499	750	383	576	319	479	222	334
	19	344	516	601	903	491	738	377	567	315	474	220	331
	20	341	513	590	887	482	725	371	557	311	468	218	328
	21	339	509	580	871	474	712	364	547	306	459	216	325
	22	336	505	568	854	465	699	357	537	300	451	214	321
	23	333	500	557	837	456	685	351	527	294	442	211	318
	24	330	496	545	819	446	671	343	516	289	434	209	314
	25	327	491	533	801	437	656	336	505	283	425	206	310
	26	323	486	521	783	427	642	329	494	276	416	203	306
	27	320	481	509	764	417	627	321	483	270	406	201	301
	28	316	476	496	745	407	612	314	472	264	397	198	297
	29	313	470	483	726	397	597	306	460	258	387	194	292
	30	309	464	471	707	387	581	298	449	251	378	191	287
	32	301	452	445	669	366	550	283	425	238	358	184	277
	34	292	439	419	630	345	519	267	402	225	338	177	266
	36	283	425	393	591	325	488	251	378	212	319	169	254
	38	273	411	368	552	304	457	236	354	199	299	161	242
	40	263	395	342	515	284	426	220	331	186	280	151	228
Properties													
A_g, in.^{2}		15.7		25.7		20.9		16.0		13.4		10.8	
$I_x = I_y$, in.^{4}		490		548		457		357		304		248	
$r_x = r_y$, in.		5.58		4.62		4.68		4.73		4.76		4.79	

ASD	LRFD
Ω_c = 1.67	ϕ_c = 0.90

[c] Shape is slender for compression with F_y = 46 ksi.

HSS12-HSS10

Table 4-4 (continued)
Available Strength in Axial Compression, kips
Square HSS

$F_y = 46$ ksi

Shape		HSS12×12×		HSS10×10×									
		3/16[c]		5/8		1/2		3/8		5/16		1/4[c]	
t_{design}, in.		0.174		0.581		0.465		0.349		0.291		0.233	
lb/ft		29.8		76.3		62.5		47.9		40.4		32.6	
Design		P_n/Ω_c	$\phi_c P_n$	P_n/Ω_c	$\phi_c P_n$	P_n/Ω_c	$\phi_c P_n$	P_n/Ω_c	$\phi_c P_n$	P_n/Ω_c	$\phi_c P_n$	P_n/Ω_c	$\phi_c P_n$
		ASD	LRFD	ASD	LRFD	ASD	LRFD	ASD	LRFD	ASD	LRFD	ASD	LRFD
Effective length, KL (ft), with respect to least radius of gyration, r_y	0	142	213	578	869	474	712	364	546	306	460	228	342
	6	141	212	565	849	463	696	355	534	299	449	224	337
	7	141	212	560	841	459	690	353	530	297	446	223	336
	8	140	211	554	833	454	683	349	525	294	442	222	334
	9	140	211	548	823	449	676	345	519	291	437	221	331
	10	140	210	541	813	444	667	341	513	287	432	219	329
	11	139	209	533	802	438	658	337	506	284	426	217	326
	12	139	208	525	789	431	648	332	499	279	420	215	323
	13	138	208	516	776	424	638	327	491	275	414	213	320
	14	137	207	507	762	417	627	321	483	271	407	211	316
	15	137	206	497	748	409	615	316	474	266	399	208	313
	16	136	205	487	732	401	603	309	465	261	392	205	308
	17	135	203	477	716	393	590	303	455	255	384	202	304
	18	135	202	465	700	384	577	296	446	250	375	199	299
	19	134	201	454	682	375	563	290	435	244	367	196	295
	20	133	200	442	665	365	549	283	425	238	358	193	289
	21	132	198	430	647	356	535	275	414	232	349	188	283
	22	131	197	418	628	346	520	268	403	226	340	183	275
	23	130	195	406	610	336	505	260	392	220	330	178	268
	24	129	193	393	591	326	490	253	380	213	321	173	260
	25	128	192	380	572	316	474	245	369	207	311	168	253
	26	126	190	368	552	305	459	237	357	201	301	163	245
	27	125	188	355	533	295	443	230	345	194	292	158	237
	28	124	186	342	514	285	428	222	333	187	282	152	229
	29	122	184	329	495	274	412	214	322	181	272	147	221
	30	121	182	316	475	264	397	206	310	174	262	142	213
	32	118	177	291	437	243	366	191	287	161	243	132	198
	34	115	173	266	400	223	336	175	264	149	223	121	182
	36	111	167	242	364	204	307	161	241	136	205	111	167
	38	108	162	219	329	185	278	146	220	124	187	102	153
	40	104	156	198	297	167	251	132	199	112	169	92.1	138
Properties													
A_g, in.[2]		8.15		21.0		17.2		13.2		11.1		8.96	
$I_x = I_y$, in.[4]		189		304		256		202		172		141	
$r_x = r_y$, in.		4.82		3.80		3.86		3.92		3.94		3.97	

ASD	LRFD
$\Omega_c = 1.67$	$\phi_c = 0.90$

[c] Shape is slender for compression with $F_y = 46$ ksi.

Table 4-4 (continued)
Available Strength in Axial Compression, kips
Square HSS

F_y = 46 ksi

HSS10-HSS9

Shape		HSS10×10×		HSS9×9×									
		3/16[c]		5/8		1/2		3/8		5/16		1/4[c]	
t_{design}, in.		0.174		0.581		0.465		0.349		0.291		0.233	
lb/ft		24.7		67.8		55.7		42.8		36.1		29.2	
Design		P_n/Ω_c	$\phi_c P_n$	P_n/Ω_c	$\phi_c P_n$	P_n/Ω_c	$\phi_c P_n$	P_n/Ω_c	$\phi_c P_n$	P_n/Ω_c	$\phi_c P_n$	P_n/Ω_c	$\phi_c P_n$
		ASD	LRFD	ASD	LRFD	ASD	LRFD	ASD	LRFD	ASD	LRFD	ASD	LRFD
Effective length, KL (ft), with respect to least radius of gyration, r_y	0	137	206	515	774	421	633	325	489	273	411	219	330
	6	136	204	500	751	409	615	316	475	266	399	215	323
	7	135	203	494	743	405	609	313	470	263	395	213	320
	8	135	202	488	734	400	601	309	465	260	391	211	317
	9	134	201	481	723	395	593	305	458	257	386	208	312
	10	133	200	474	712	388	584	300	452	253	380	205	308
	11	132	199	465	700	382	574	296	444	249	374	202	303
	12	132	198	457	686	375	563	290	436	244	367	198	298
	13	131	196	447	672	367	552	285	428	240	360	194	292
	14	130	195	437	657	359	540	279	419	235	353	190	286
	15	128	193	427	641	351	527	272	409	230	345	186	280
	16	127	191	416	625	342	514	266	399	224	337	182	273
	17	126	189	404	608	333	501	259	389	219	328	177	267
	18	125	187	393	590	324	487	252	379	213	320	173	260
	19	123	185	381	572	314	472	245	368	207	311	168	252
	20	122	183	368	554	304	457	237	357	201	301	163	245
	21	120	180	356	535	294	442	230	345	194	292	158	237
	22	118	178	343	516	284	427	222	334	188	283	153	230
	23	116	175	331	497	274	412	214	322	182	273	148	222
	24	115	172	318	478	264	396	207	311	175	263	142	214
	25	113	169	305	459	253	381	199	299	169	253	137	206
	26	111	166	292	439	243	365	191	287	162	244	132	198
	27	108	163	280	420	233	350	183	275	156	234	127	190
	28	106	159	267	401	223	335	175	264	149	224	121	183
	29	104	156	255	383	213	319	168	252	143	214	116	175
	30	101	152	242	364	203	305	160	241	136	205	111	167
	32	96.0	144	218	328	183	275	145	218	124	186	101	152
	34	90.3	136	195	293	164	247	131	197	112	168	91.4	137
	36	84.2	127	174	262	147	220	117	176	100	150	82.0	123
	38	77.7	117	156	235	132	198	105	158	89.9	135	73.6	111
	40	70.6	106	141	212	119	179	94.8	143	81.1	122	66.4	99.8
Properties													
A_g, in.^{2}		6.76		18.7		15.3		11.8		9.92		8.03	
$I_x = I_y$, in.^{4}		108		216		183		145		124		102	
$r_x = r_y$, in.		4.00		3.40		3.45		3.51		3.54		3.56	

ASD	LRFD
Ω_c = 1.67	ϕ_c = 0.90

[c] Shape is slender for compression with F_y = 46 ksi.

HSS9-HSS8

Table 4-4 (continued)
Available Strength in Axial Compression, kips
Square HSS

F_y = 46 ksi

Shape		HSS9×9×				HSS8×8×							
		3/16[c]		1/8[c]		5/8		1/2		3/8		5/16	
t_{design}, in.		0.174		0.116		0.581		0.465		0.349		0.291	
lb/ft		22.2		15.0		59.3		48.9		37.7		31.8	
Design		P_n/Ω_c	$\phi_c P_n$	P_n/Ω_c	$\phi_c P_n$	P_n/Ω_c	$\phi_c P_n$	P_n/Ω_c	$\phi_c P_n$	P_n/Ω_c	$\phi_c P_n$	P_n/Ω_c	$\phi_c P_n$
		ASD	LRFD	ASD	LRFD	ASD	LRFD	ASD	LRFD	ASD	LRFD	ASD	LRFD
Effective length, KL (ft), with respect to least radius of gyration, r_y	0	134	201	64.4	96.8	452	679	372	559	286	431	241	363
	6	132	198	63.8	95.9	434	653	358	538	276	415	233	350
	7	131	197	63.6	95.6	428	644	353	531	273	410	230	346
	8	130	196	63.4	95.2	421	633	348	523	269	404	226	340
	9	130	195	63.1	94.8	414	622	342	513	264	397	223	335
	10	129	193	62.8	94.4	405	609	335	503	259	389	219	329
	11	128	192	62.4	93.9	396	596	328	492	254	381	214	322
	12	126	190	62.1	93.3	386	581	320	481	248	372	209	315
	13	125	188	61.7	92.7	376	565	311	468	242	363	204	307
	14	124	186	61.2	92.0	365	549	303	455	235	353	199	299
	15	122	184	60.7	91.3	354	532	294	441	228	343	193	290
	16	120	181	60.2	90.5	342	514	284	427	221	333	187	282
	17	119	178	59.7	89.7	330	496	275	413	214	322	181	273
	18	117	176	59.1	88.8	318	478	265	398	207	311	175	263
	19	115	173	58.5	87.9	306	459	255	383	199	299	169	254
	20	113	170	57.8	86.9	293	440	245	367	191	288	162	244
	21	111	166	57.1	85.9	280	421	234	352	184	276	156	234
	22	108	163	56.4	84.8	267	402	224	337	176	264	150	225
	23	106	159	55.6	83.6	255	383	214	321	168	253	143	215
	24	103	155	54.8	82.4	242	364	203	306	160	241	137	205
	25	101	151	54.0	81.1	230	345	193	290	153	229	130	195
	26	97.7	147	53.1	79.8	217	326	183	275	145	218	124	186
	27	94.7	142	52.1	78.3	205	308	173	260	137	206	117	176
	28	91.6	138	51.1	76.9	193	290	163	246	130	195	111	167
	29	88.4	133	50.1	75.3	182	273	154	231	123	184	105	158
	30	84.9	128	49.0	73.7	170	256	145	217	116	174	99.1	149
	32	77.3	116	46.7	70.2	149	225	127	191	102	153	87.5	131
	34	70.0	105	44.2	66.4	132	199	113	169	90.2	136	77.6	116
	36	62.9	94.5	41.4	62.2	118	177	100	151	80.5	121	69.1	104
	38	56.5	84.9	38.4	57.7	106	159	90.2	136	72.2	109	62.0	93.2
	40	51.0	76.6	35.0	52.6	95.6	144	81.4	122	65.2	98.0	56.0	84.1
Properties													
A_g, in.^{2}		6.06		4.09		16.4		13.5		10.4		8.76	
$I_x = I_y$, in.^{4}		78.2		53.5		146		125		100		85.6	
$r_x = r_y$, in.		3.59		3.62		2.99		3.04		3.10		3.13	

ASD	LRFD
Ω_c = 1.67	ϕ_c = 0.90

[c] Shape is slender for compression with F_y = 46 ksi.

Table 4-4 (continued)

Available Strength in Axial Compression, kips

Square HSS

F_y = 46 ksi

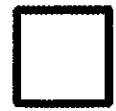

HSS8-HSS7

Shape		HSS8×8×						HSS7×7×					
		1/4		3/16[c]		1/8[c]		5/8		1/2		3/8	
t_{design}, in.		0.233		0.174		0.116		0.581		0.465		0.349	
lb/ft		25.8		19.6		13.3		50.8		42.1		32.6	
Design		P_n/Ω_c	$\phi_c P_n$	P_n/Ω_c	$\phi_c P_n$	P_n/Ω_c	$\phi_c P_n$	P_n/Ω_c	$\phi_c P_n$	P_n/Ω_c	$\phi_c P_n$	P_n/Ω_c	$\phi_c P_n$
		ASD	LRFD	ASD	LRFD	ASD	LRFD	ASD	LRFD	ASD	LRFD	ASD	LRFD
Effective length, KL (ft), with respect to least radius of gyration, r_y	0	196	294	130	195	63.0	94.7	386	580	320	480	247	371
	6	189	284	127	191	62.2	93.5	366	550	304	457	235	354
	7	186	280	126	190	61.9	93.0	359	540	298	448	231	348
	8	184	276	125	188	61.6	92.5	351	528	292	439	227	341
	9	181	272	124	186	61.2	92.0	343	515	285	429	222	333
	10	177	267	122	184	60.8	91.3	333	501	278	417	216	325
	11	174	261	121	182	60.3	90.6	323	486	270	405	210	316
	12	170	255	119	179	59.7	89.8	313	470	261	393	204	306
	13	166	249	117	176	59.2	88.9	302	453	252	379	197	296
	14	162	243	115	174	58.5	88.0	290	436	243	365	190	286
	15	157	236	113	170	57.9	87.0	278	418	233	350	183	275
	16	152	229	111	167	57.2	85.9	266	399	223	336	175	264
	17	147	222	109	163	56.4	84.7	253	381	213	320	168	252
	18	143	214	106	159	55.6	83.5	241	362	203	305	160	241
	19	137	207	103	155	54.7	82.2	228	343	193	290	152	229
	20	132	199	100	151	53.7	80.8	215	324	182	274	145	217
	21	127	191	97.0	146	52.7	79.3	203	305	172	259	137	206
	22	122	183	93.0	140	51.7	77.7	191	287	162	244	129	194
	23	117	175	89.1	134	50.6	76.0	179	268	152	229	122	183
	24	111	168	85.2	128	49.4	74.3	167	251	143	214	114	172
	25	106	160	81.3	122	48.2	72.4	155	233	133	200	107	161
	26	101	152	77.4	116	46.9	70.5	144	216	124	186	100	150
	27	96.0	144	73.6	111	45.5	68.4	133	201	115	173	92.9	140
	28	91.0	137	69.8	105	44.1	66.2	124	186	107	161	86.4	130
	29	86.0	129	66.1	99.3	42.6	64.0	116	174	99.6	150	80.6	121
	30	81.2	122	62.5	93.9	41.0	61.6	108	162	93.1	140	75.3	113
	32	71.8	108	55.4	83.2	37.5	56.4	95.0	143	81.8	123	66.2	99.4
	34	63.6	95.6	49.0	73.7	33.7	50.6	84.1	126	72.4	109	58.6	88.1
	36	56.7	85.3	43.7	65.7	30.0	45.2	75.1	113	64.6	97.1	52.3	78.6
	38	50.9	76.5	39.3	59.0	27.0	40.5	67.4	101	58.0	87.2	46.9	70.5
	40	46.0	69.1	35.4	53.2	24.3	36.6	60.8	91.4	52.3	78.7	42.3	63.6
Properties													
A_g, in.^{2}		7.10		5.37		3.62		14.0		11.6		8.97	
$I_x = I_y$, in.^{4}		70.7		54.4		37.4		93.4		80.5		65.0	
$r_x = r_y$, in.		3.15		3.18		3.21		2.58		2.63		2.69	

ASD	LRFD
Ω_c = 1.67	ϕ_c = 0.90

[c] Shape is slender for compression with F_y = 46 ksi.

HSS7-HSS6

Table 4-4 (continued)
Available Strength in Axial Compression, kips
Square HSS

F_y = 46 ksi

Shape		HSS7×7×								HSS6×6×			
		5/16		1/4		3/16[c]		1/8[c]		5/8		1/2	
t_{design}, in.		0.291		0.233		0.174		0.116		0.581		0.465	
lb/ft		27.6		22.4		17.1		11.6		42.3		35.2	
Design		P_n/Ω_c	$\phi_c P_n$	P_n/Ω_c	$\phi_c P_n$	P_n/Ω_c	$\phi_c P_n$	P_n/Ω_c	$\phi_c P_n$	P_n/Ω_c	$\phi_c P_n$	P_n/Ω_c	$\phi_c P_n$
		ASD	LRFD	ASD	LRFD	ASD	LRFD	ASD	LRFD	ASD	LRFD	ASD	LRFD
Effective length, KL (ft), with respect to least radius of gyration, r_y	0	209	314	170	255	124	187	61.7	92.7	322	484	268	403
	6	199	300	162	244	120	181	60.5	90.9	299	450	250	376
	7	196	295	160	240	119	179	60.0	90.2	291	438	244	367
	8	192	289	157	235	117	177	59.5	89.5	283	425	237	356
	9	188	283	153	230	116	174	59.0	88.6	273	410	229	344
	10	183	276	150	225	113	170	58.3	87.6	262	394	221	332
	11	178	268	146	219	110	166	57.6	86.6	251	378	212	319
	12	173	260	141	212	107	161	56.8	85.4	240	360	203	305
	13	168	252	137	206	104	156	56.0	84.1	228	342	193	290
	14	162	243	132	199	100	151	55.0	82.7	215	324	183	275
	15	156	234	127	191	96.8	146	54.0	81.2	203	305	173	260
	16	150	225	122	184	93.1	140	52.9	79.6	190	286	163	245
	17	143	215	117	176	89.3	134	51.8	77.8	178	267	153	230
	18	137	206	112	169	85.5	128	50.5	75.9	165	249	143	215
	19	130	196	107	161	81.6	123	49.2	73.9	153	231	133	200
	20	124	186	102	153	77.6	117	47.8	71.8	142	213	123	185
	21	117	176	96.6	145	73.7	111	46.3	69.5	130	196	114	171
	22	111	167	91.4	137	69.8	105	44.7	67.1	119	179	104	157
	23	105	157	86.3	130	66.0	99.1	43.0	64.6	109	163	95.6	144
	24	98.3	148	81.3	122	62.2	93.4	41.2	61.9	99.8	150	87.8	132
	25	92.2	139	76.3	115	58.4	87.8	39.3	59.1	92.0	138	80.9	122
	26	86.3	130	71.5	107	54.8	82.4	37.3	56.1	85.1	128	74.8	112
	27	80.4	121	66.8	100	51.2	77.0	35.2	52.9	78.9	119	69.4	104
	28	74.8	112	62.1	93.4	47.7	71.7	33.0	49.6	73.4	110	64.5	96.9
	29	69.7	105	57.9	87.0	44.5	66.8	30.7	46.2	68.4	103	60.1	90.4
	30	65.1	97.9	54.1	81.3	41.6	62.5	28.7	43.2	63.9	96.0	56.2	84.4
	32	57.2	86.0	47.6	71.5	36.5	54.9	25.3	38.0	56.2	84.4	49.4	74.2
	34	50.7	76.2	42.1	63.3	32.4	48.6	22.4	33.6	49.7	74.8	43.7	65.7
	36	45.2	68.0	37.6	56.5	28.9	43.4	20.0	30.0	44.4	66.7	39.0	58.6
	38	40.6	61.0	33.7	50.7	25.9	38.9	17.9	26.9				
	40	36.6	55.1	30.4	45.8	23.4	35.1	16.2	24.3				
Properties													
A_g, in.^{2}		7.59		6.17		4.67		3.16		11.7		9.74	
$I_x = I_y$, in.^{4}		56.1		46.5		36.0		24.8		55.2		48.3	
$r_x = r_y$, in.		2.72		2.75		2.77		2.80		2.17		2.23	

ASD	LRFD
Ω_c = 1.67	ϕ_c = 0.90

[c] Shape is slender for compression with F_y = 46 ksi.

Note: Heavy line indicates KL/r_y equal to or greater than 200.

Table 4-4 (continued)

Available Strength in Axial Compression, kips

Square HSS

F_y = 46 ksi

HSS6

Shape		HSS6×6×									
		3/8		5/16		1/4		3/16		1/8[c]	
t_{design}, in.		0.349		0.291		0.233		0.174		0.116	
lb/ft		27.5		23.3		19.0		14.5		9.86	
Design		P_n/Ω_c	$\phi_c P_n$	P_n/Ω_c	$\phi_c P_n$	P_n/Ω_c	$\phi_c P_n$	P_n/Ω_c	$\phi_c P_n$	P_n/Ω_c	$\phi_c P_n$
		ASD	LRFD	ASD	LRFD	ASD	LRFD	ASD	LRFD	ASD	LRFD
Effective length, KL (ft), with respect to least radius of gyration, r_y	0	209	314	177	266	144	217	110	165	59.6	89.6
	6	195	293	166	249	135	204	103	155	57.8	86.8
	7	191	286	162	244	132	199	101	151	57.1	85.8
	8	185	279	158	237	129	194	98.2	148	56.3	84.6
	9	180	270	153	230	125	188	95.3	143	55.4	83.3
	10	173	260	148	222	121	182	92.3	139	54.4	81.8
	11	167	250	142	214	117	175	89.0	134	53.3	80.1
	12	160	240	136	205	112	168	85.5	129	52.1	78.3
	13	152	229	130	196	107	161	81.9	123	50.7	76.2
	14	145	218	124	187	102	153	78.2	118	49.3	74.0
	15	137	206	118	177	96.9	146	74.4	112	47.7	71.6
	16	130	195	111	167	91.8	138	70.5	106	46.0	69.1
	17	122	183	105	158	86.6	130	66.6	100	44.1	66.3
	18	114	172	98.4	148	81.4	122	62.7	94.2	42.2	63.4
	19	107	160	92.0	138	76.2	115	58.8	88.4	40.1	60.2
	20	99.1	149	85.7	129	71.1	107	55.0	82.7	37.7	56.7
	21	91.8	138	79.5	120	66.2	99.4	51.2	77.0	35.2	52.9
	22	84.7	127	73.6	111	61.3	92.1	47.6	71.5	32.7	49.2
	23	77.8	117	67.7	102	56.6	85.1	44.0	66.2	30.3	45.6
	24	71.4	107	62.2	93.5	52.0	78.1	40.5	60.9	27.9	42.0
	25	65.8	98.9	57.3	86.1	47.9	72.0	37.3	56.1	25.8	38.7
	26	60.8	91.4	53.0	79.6	44.3	66.6	34.5	51.9	23.8	35.8
	27	56.4	84.8	49.1	73.8	41.1	61.7	32.0	48.1	22.1	33.2
	28	52.5	78.8	45.7	68.7	38.2	57.4	29.8	44.7	20.5	30.9
	29	48.9	73.5	42.6	64.0	35.6	53.5	27.7	41.7	19.1	28.8
	30	45.7	68.7	39.8	59.8	33.3	50.0	25.9	39.0	17.9	26.9
	32	40.2	60.4	35.0	52.6	29.2	44.0	22.8	34.2	15.7	23.6
	34	35.6	53.5	31.0	46.6	25.9	38.9	20.2	30.3	13.9	20.9
	36	31.7	47.7	27.6	41.5	23.1	34.7	18.0	27.1	12.4	18.7
	38	28.5	42.8	24.8	37.3	20.7	31.2	16.2	24.3	11.1	16.8
Properties											
A_g, in.^{2}		7.58		6.43		5.24		3.98		2.70	
$I_x = I_y$, in.^{4}		39.5		34.3		28.6		22.3		15.5	
$r_x = r_y$, in.		2.28		2.31		2.34		2.37		2.39	
ASD		LRFD		[c] Shape is slender for compression with F_y = 46 ksi.							
Ω_c = 1.67		ϕ_c = 0.90									

HSS5½-HSS5

Table 4-4 (continued)
Available Strength in Axial Compression, kips
Square HSS

F_y = 46 ksi

Shape		HSS5½×5½×										HSS5×5×	
		3/8		5/16		1/4		3/16		1/8[c]		1/2	
t_{design}, in.		0.349		0.291		0.233		0.174		0.116		0.465	
lb/ft		24.9		21.2		17.3		13.3		9.01		28.4	
Design		P_n/Ω_c ASD	$\phi_c P_n$ LRFD	P_n/Ω_c ASD	$\phi_c P_n$ LRFD	P_n/Ω_c ASD	$\phi_c P_n$ LRFD	P_n/Ω_c ASD	$\phi_c P_n$ LRFD	P_n/Ω_c ASD	$\phi_c P_n$ LRFD	P_n/Ω_c ASD	$\phi_c P_n$ LRFD
Effective length, KL (ft), with respect to least radius of gyration, r_y	0	190	285	161	242	131	197	100	150	58.0	87.2	217	326
	1	189	284	161	242	131	197	99.8	150	58.0	87.1	216	325
	2	188	282	160	240	130	196	99.2	149	57.8	86.9	215	322
	3	186	279	158	237	129	194	98.1	147	57.5	86.4	211	318
	4	183	275	156	234	127	191	96.7	145	57.0	85.7	207	311
	5	179	269	153	229	125	187	94.9	143	56.4	84.8	202	303
	6	175	263	149	224	122	183	92.8	139	55.7	83.7	195	294
	7	170	255	145	218	118	178	90.3	136	54.8	82.4	188	283
	8	164	247	140	211	115	172	87.5	132	53.8	80.9	180	271
	9	158	238	135	203	111	166	84.5	127	52.7	79.2	171	257
	10	151	228	130	195	106	160	81.2	122	51.4	77.3	162	244
	11	145	217	124	186	101	153	77.8	117	50.0	75.2	152	229
	12	137	206	118	177	96.6	145	74.1	111	48.5	72.8	142	214
	13	130	195	112	168	91.6	138	70.4	106	46.7	70.3	132	199
	14	122	184	105	158	86.5	130	66.6	100	44.9	67.5	122	184
	15	115	172	98.8	148	81.3	122	62.7	94.2	42.9	64.5	112	169
	16	107	161	92.3	139	76.1	114	58.8	88.3	40.4	60.7	103	154
	17	99.2	149	85.9	129	70.9	107	54.9	82.5	37.8	56.8	93.2	140
	18	91.7	138	79.6	120	65.8	98.9	51.0	76.7	35.2	52.9	84.1	126
	19	84.5	127	73.5	110	60.8	91.4	47.3	71.0	32.7	49.1	75.5	113
	20	77.4	116	67.5	101	55.9	84.1	43.6	65.5	30.2	45.4	68.1	102
	21	70.5	106	61.6	92.7	51.2	77.0	40.0	60.2	27.8	41.8	61.8	92.9
	22	64.2	96.5	56.2	84.4	46.7	70.1	36.5	54.9	25.4	38.2	56.8	84.6
	23	58.7	88.3	51.4	77.2	42.7	64.2	33.4	50.2	23.3	35.0	51.5	77.4
	24	53.9	81.1	47.2	70.9	39.2	58.9	30.7	46.1	21.4	32.1	47.3	71.1
	25	49.7	74.7	43.5	65.4	36.1	54.3	28.3	42.5	19.7	29.6	43.6	65.5
	26	46.0	69.1	40.2	60.4	33.4	50.2	26.2	39.3	18.2	27.4	40.3	60.6
	27	42.6	64.1	37.3	56.0	31.0	46.6	24.2	36.4	16.9	25.4	37.4	56.2
	28	39.6	59.6	34.7	52.1	28.8	43.3	22.5	33.9	15.7	23.6	34.8	52.2
	29	36.9	55.5	32.3	48.6	26.9	40.4	21.0	31.6	14.6	22.0	32.4	48.7
	30	34.5	51.9	30.2	45.4	25.1	37.7	19.6	29.5	13.7	20.6	30.3	45.5
Properties													
A_g, in.^{2}		6.88		5.85		4.77		3.63		2.46		7.88	
$I_x = I_y$, in.^{4}		29.7		25.9		21.7		17.0		11.8		26.0	
$r_x = r_y$, in.		2.08		2.11		2.13		2.16		2.19		1.82	

ASD	LRFD
$\Omega_c = 1.67$	$\phi_c = 0.90$

[c] Shape is slender for compression with F_y = 46 ksi.

Table 4-4 (continued)

Available Strength in Axial Compression, kips

Square HSS

F_y = 46 ksi

HSS5-HSS4½

Shape		HSS5×5×										HSS4½×4½×	
		3/8		5/16		1/4		3/16		1/8[c]		1/2	
t_{design}, in.		0.349		0.291		0.233		0.174		0.116		0.465	
lb/ft		22.4		19.1		15.6		12.0		8.16		25.0	
Design		P_n/Ω_c ASD	$\phi_c P_n$ LRFD	P_n/Ω_c ASD	$\phi_c P_n$ LRFD	P_n/Ω_c ASD	$\phi_c P_n$ LRFD	P_n/Ω_c ASD	$\phi_c P_n$ LRFD	P_n/Ω_c ASD	$\phi_c P_n$ LRFD	P_n/Ω_c ASD	$\phi_c P_n$ LRFD
Effective length, KL (ft), with respect to least radius of gyration, r_y	0	170	256	145	218	118	178	90.3	136	56.4	84.8	191	288
	1	170	255	144	217	118	178	90.1	135	56.4	84.7	191	287
	2	168	253	143	215	117	176	89.4	134	56.1	84.3	189	283
	3	166	250	141	213	116	174	88.3	133	55.7	83.7	185	278
	4	163	245	139	209	114	171	86.8	130	55.1	82.8	180	271
	5	159	239	135	204	111	167	84.8	127	54.3	81.6	174	262
	6	154	232	132	198	108	162	82.5	124	53.4	80.2	167	252
	7	149	223	127	191	104	157	79.8	120	52.3	78.5	159	240
	8	143	214	122	183	100	151	76.9	116	51.0	76.6	151	227
	9	136	204	117	175	95.9	144	73.7	111	49.5	74.4	141	213
	10	129	194	111	167	91.3	137	70.2	106	47.8	71.9	132	198
	11	122	183	105	157	86.5	130	66.6	100	45.7	68.7	122	183
	12	114	172	98.5	148	81.4	122	62.8	94.4	43.2	64.9	112	168
	13	107	160	92.1	138	76.3	115	59.0	88.7	40.6	61.1	102	153
	14	98.9	149	85.6	129	71.1	107	55.1	82.8	38.0	57.2	92.0	138
	15	91.3	137	79.2	119	66.0	99.2	51.2	77.0	35.4	53.2	82.6	124
	16	83.8	126	72.9	110	60.9	91.5	47.4	71.2	32.8	49.4	73.5	110
	17	76.4	115	66.7	100	55.9	84.0	43.6	65.5	30.3	45.5	65.1	97.8
	18	69.4	104	60.7	91.3	51.0	76.7	39.9	60.0	27.8	41.8	58.0	87.2
	19	62.5	93.9	54.9	82.5	46.3	69.6	36.4	54.6	25.4	38.2	52.1	78.3
	20	56.4	84.8	49.6	74.5	41.8	62.8	32.9	49.4	23.0	34.6	47.0	70.7
	21	51.2	76.9	44.9	67.6	37.9	57.0	29.8	44.8	20.9	31.4	42.6	64.1
	22	46.6	70.0	41.0	61.5	34.5	51.9	27.2	40.8	19.0	28.6	38.9	58.4
	23	42.6	64.1	37.5	56.3	31.6	47.5	24.9	37.4	17.4	26.2	35.5	53.4
	24	39.2	58.9	34.4	51.7	29.0	43.6	22.8	34.3	16.0	24.1	32.6	49.1
	25	36.1	54.2	31.7	47.7	26.7	40.2	21.0	31.6	14.7	22.2	30.1	45.2
	26	33.4	50.2	29.3	44.1	24.7	37.2	19.5	29.2	13.6	20.5	27.8	41.8
	27	30.9	46.5	27.2	40.9	22.9	34.5	18.0	27.1	12.6	19.0		
	28	28.8	43.2	25.3	38.0	21.3	32.1	16.8	25.2	11.8	17.7		
	29	26.8	40.3	23.6	35.4	19.9	29.9	15.6	23.5	11.0	16.5		
Properties													
A_g, in.^{2}		6.18		5.26		4.30		3.28		2.23		6.95	
$I_x = I_y$, in.^{4}		21.7		19.0		16.0		12.6		8.80		18.1	
$r_x = r_y$, in.		1.87		1.90		1.93		1.96		1.99		1.61	

ASD	LRFD
Ω_c = 1.67	ϕ_c = 0.90

[c] Shape is slender for compression with F_y = 46 ksi.

Note: Heavy line indicates KL/r_y equal to or greater than 200.

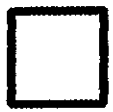

HSS4½-HSS4

Table 4-4 (continued)
Available Strength in Axial Compression, kips
Square HSS

F_y = 46 ksi

Shape		HSS4½×4½×										HSS4×4×	
		3/8		5/16		1/4		3/16		1/8[c]		1/2	
t_{design}, in.		0.349		0.291		0.233		0.174		0.116		0.465	
lb/ft		19.8		17.0		13.9		10.7		7.31		21.6	
Design		P_n/Ω_c ASD	$\phi_c P_n$ LRFD	P_n/Ω_c ASD	$\phi_c P_n$ LRFD	P_n/Ω_c ASD	$\phi_c P_n$ LRFD	P_n/Ω_c ASD	$\phi_c P_n$ LRFD	P_n/Ω_c ASD	$\phi_c P_n$ LRFD	P_n/Ω_c ASD	$\phi_c P_n$ LRFD
Effective length, KL (ft), with respect to least radius of gyration, r_y	0	151	227	129	194	106	159	80.7	121	54.4	81.8	166	249
	1	150	226	128	193	105	158	80.5	121	54.3	81.6	165	248
	2	149	224	127	191	104	157	79.7	120	54.0	81.1	163	244
	3	146	220	125	188	103	154	78.4	118	53.4	80.3	159	239
	4	143	215	122	184	100	151	76.7	115	52.5	78.8	153	231
	5	138	208	119	178	97.5	147	74.6	112	51.0	76.7	147	221
	6	133	200	114	172	94.1	141	72.0	108	49.3	74.2	139	209
	7	127	191	109	164	90.3	136	69.1	104	47.4	71.3	131	196
	8	121	182	104	156	86.0	129	65.9	99.1	45.3	68.1	121	182
	9	114	171	98.3	148	81.4	122	62.5	93.9	43.0	64.6	112	168
	10	107	160	92.2	139	76.5	115	58.8	88.4	40.6	61.0	102	153
	11	99.2	149	85.9	129	71.5	107	55.0	82.7	38.1	57.2	92.0	138
	12	91.5	138	79.6	120	66.4	99.8	51.2	76.9	35.5	53.3	82.2	124
	13	83.9	126	73.2	110	61.2	92.0	47.3	71.1	32.9	49.4	72.8	109
	14	76.4	115	66.8	100	56.1	84.3	43.4	65.3	30.3	45.5	63.7	95.8
	15	69.1	104	60.6	91.1	51.1	76.7	39.6	59.5	27.7	41.6	55.5	83.5
	16	62.0	93.2	54.7	82.1	46.2	69.4	35.9	54.0	25.2	37.9	48.8	73.3
	17	55.2	83.0	48.8	73.4	41.5	62.4	32.4	48.6	22.8	34.2	43.2	65.0
	18	49.2	74.0	43.6	65.5	37.0	55.6	28.9	43.4	20.4	30.7	38.6	58.0
	19	44.2	66.4	39.1	58.8	33.2	49.9	25.9	39.0	18.3	27.5	34.6	52.0
	20	39.9	59.9	35.3	53.0	30.0	45.1	23.4	35.2	16.5	24.9	31.2	46.9
	21	36.2	54.4	32.0	48.1	27.2	40.9	21.2	31.9	15.0	22.5	28.3	42.6
	22	33.0	49.5	29.2	43.8	24.8	37.3	19.4	29.1	13.7	20.5	25.8	38.8
	23	30.2	45.3	26.7	40.1	22.7	34.1	17.7	26.6	12.5	18.8	23.6	35.5
	24	27.7	41.6	24.5	36.8	20.8	31.3	16.3	24.4	11.5	17.3		
	25	25.5	38.4	22.6	34.0	19.2	28.8	15.0	22.5	10.6	15.9		
	26	23.6	35.5	20.9	31.4	17.7	26.7	13.9	20.8	9.78	14.7		
	27	21.9	32.9	19.4	29.1	16.5	24.7	12.8	19.3	9.07	13.6		
	28			18.0	27.1	15.3	23.0	11.9	18.0	8.44	12.7		
	29							11.1	16.7	7.86	11.8		
Properties													
A_g, in.^{2}		5.48		4.68		3.84		2.93		2.00		6.02	
$I_x = I_y$, in.^{4}		15.3		13.5		11.4		9.02		6.35		11.9	
$r_x = r_y$, in.		1.67		1.70		1.73		1.75		1.78		1.41	

ASD	LRFD
Ω_c = 1.67	ϕ_c = 0.90

[c] Shape is slender for compression with F_y = 46 ksi.

Note: Heavy line indicates KL/r_y equal to or greater than 200.

Table 4-4 (continued)

Available Strength in Axial Compression, kips

Square HSS

F_y = 46 ksi

HSS4

Shape		HSS4×4×									
		3/8		5/16		1/4		3/16		1/8	
t_{design}, in.		0.349		0.291		0.233		0.174		0.116	
lb/ft		17.3		14.8		12.2		9.42		6.46	
Design		P_n/Ω_c	$\phi_c P_n$	P_n/Ω_c	$\phi_c P_n$	P_n/Ω_c	$\phi_c P_n$	P_n/Ω_c	$\phi_c P_n$	P_n/Ω_c	$\phi_c P_n$
		ASD	LRFD	ASD	LRFD	ASD	LRFD	ASD	LRFD	ASD	LRFD
Effective length, KL (ft), with respect to least radius of gyration, r_y	0	132	198	113	170	92.8	140	71.1	107	48.8	73.3
	1	131	197	112	169	92.4	139	70.8	106	48.6	73.0
	2	129	194	111	167	91.3	137	69.9	105	48.0	72.1
	3	126	190	109	163	89.4	134	68.5	103	47.1	70.8
	4	123	184	105	158	86.8	130	66.6	100	45.8	68.9
	5	118	177	101	152	83.6	126	64.2	96.6	44.2	66.5
	6	112	168	96.5	145	79.8	120	61.5	92.4	42.4	63.7
	7	106	159	91.2	137	75.6	114	58.3	87.7	40.3	60.6
	8	98.8	149	85.4	128	71.0	107	54.9	82.5	38.0	57.2
	9	91.6	138	79.3	119	66.1	99.3	51.3	77.1	35.6	53.5
	10	84.1	126	73.0	110	61.0	91.7	47.5	71.4	33.1	49.7
	11	76.5	115	66.6	100	55.9	84.0	43.6	65.6	30.5	45.8
	12	69.0	104	60.3	90.6	50.8	76.3	39.8	59.8	27.9	41.9
	13	61.7	92.8	54.0	81.2	45.7	68.7	36.0	54.0	25.3	38.0
	14	54.7	82.2	48.0	72.2	40.8	61.3	32.2	48.5	22.8	34.3
	15	47.9	72.0	42.2	63.5	36.1	54.3	28.7	43.1	20.4	30.6
	16	42.1	63.3	37.1	55.8	31.7	47.7	25.3	38.0	18.0	27.1
	17	37.3	56.1	32.9	49.4	28.1	42.3	22.4	33.6	16.0	24.0
	18	33.3	50.0	29.3	44.1	25.1	37.7	20.0	30.0	14.2	21.4
	19	29.9	44.9	26.3	39.6	22.5	33.8	17.9	26.9	12.8	19.2
	20	27.0	40.5	23.8	35.7	20.3	30.5	16.2	24.3	11.5	17.3
	21	24.4	36.7	21.5	32.4	18.4	27.7	14.7	22.1	10.5	15.7
	22	22.3	33.5	19.6	29.5	16.8	25.2	13.4	20.1	9.53	14.3
	23	20.4	30.6	18.0	27.0	15.4	23.1	12.2	18.4	8.72	13.1
	24	18.7	28.1	16.5	24.8	14.1	21.2	11.2	16.9	8.01	12.0
	25					13.0	19.5	10.4	15.6	7.38	11.1
	26									6.82	10.3

Properties					
A_g, in.^{2}	4.78	4.10	3.37	2.58	1.77
$I_x = I_y$, in.^{4}	10.3	9.14	7.80	6.21	4.40
$r_x = r_y$, in.	1.47	1.49	1.52	1.55	1.58

ASD	LRFD
Ω_c = 1.67	ϕ_c = 0.90

Note: Heavy line indicates KL/r_y equal to or greater than 200.

HSS3½

Table 4-4 (continued)
Available Strength in Axial Compression, kips
Square HSS

F_y = 46 ksi

Shape		HSS3½×3½×									
		3/8		5/16		1/4		3/16		1/8	
t_{design}, in.		0.349		0.291		0.233		0.174		0.116	
lb/ft		14.7		12.7		10.5		8.15		5.61	
Design		P_n/Ω_c	$\phi_c P_n$	P_n/Ω_c	$\phi_c P_n$	P_n/Ω_c	$\phi_c P_n$	P_n/Ω_c	$\phi_c P_n$	P_n/Ω_c	$\phi_c P_n$
		ASD	LRFD	ASD	LRFD	ASD	LRFD	ASD	LRFD	ASD	LRFD
Effective length, KL (ft), with respect to least radius of gyration, r_y	0	113	169	97.0	146	80.2	120	61.7	92.7	42.4	63.8
	1	112	168	96.4	145	79.7	120	61.4	92.2	42.2	63.4
	2	110	165	94.7	142	78.4	118	60.4	90.8	41.6	62.5
	3	107	160	92.0	138	76.2	115	58.8	88.4	40.5	60.9
	4	102	154	88.3	133	73.3	110	56.7	85.2	39.1	58.7
	5	96.7	145	83.8	126	69.8	105	54.0	81.2	37.3	56.0
	6	90.4	136	78.6	118	65.6	98.6	51.0	76.6	35.2	52.9
	7	83.5	126	72.9	110	61.0	91.7	47.6	71.5	32.9	49.5
	8	76.2	115	66.8	100	56.2	84.4	43.9	66.0	30.5	45.8
	9	68.7	103	60.5	90.9	51.1	76.8	40.1	60.3	27.9	42.0
	10	61.2	92.0	54.2	81.4	46.0	69.1	36.3	54.5	25.3	38.1
	11	53.8	80.9	47.9	72.1	40.9	61.5	32.4	48.7	22.7	34.1
	12	46.8	70.3	41.9	63.0	36.0	54.1	28.7	43.1	20.2	30.3
	13	40.1	60.3	36.2	54.4	31.3	47.1	25.1	37.8	17.7	26.7
	14	34.6	52.0	31.2	46.9	27.0	40.6	21.7	32.7	15.4	23.1
	15	30.1	45.3	27.2	40.8	23.5	35.4	18.9	28.5	13.4	20.2
	16	26.5	39.8	23.9	35.9	20.7	31.1	16.6	25.0	11.8	17.7
	17	23.5	35.2	21.2	31.8	18.3	27.5	14.7	22.2	10.4	15.7
	18	20.9	31.4	18.9	28.4	16.3	24.6	13.2	19.8	9.31	14.0
	19	18.8	28.2	16.9	25.5	14.7	22.0	11.8	17.7	8.36	12.6
	20	16.9	25.5	15.3	23.0	13.2	19.9	10.7	16.0	7.54	11.3
	21	15.4	23.1	13.9	20.8	12.0	18.0	9.66	14.5	6.84	10.3
	22					10.9	16.4	8.80	13.2	6.23	9.37

Properties					
A_g, in.^{2}	4.09	3.52	2.91	2.24	1.54
$I_x = I_y$, in.^{4}	6.49	5.84	5.04	4.05	2.90
$r_x = r_y$, in.	1.26	1.29	1.32	1.35	1.37

ASD	LRFD	Note: Heavy line indicates KL/r_y equal to or greater than 200.
$\Omega_c = 1.67$	$\phi_c = 0.90$	

Table 4-4 (continued)

Available Strength in Axial Compression, kips

Square HSS

F_y = 46 ksi

HSS3

Shape		HSS3×3×									
		3/8		5/16		1/4		3/16		1/8	
t_{design}, in.		0.349		0.291		0.233		0.174		0.116	
lb/ft		12.2		10.6		8.81		6.87		4.75	
Design		P_n/Ω_c ASD	$\phi_c P_n$ LRFD	P_n/Ω_c ASD	$\phi_c P_n$ LRFD	P_n/Ω_c ASD	$\phi_c P_n$ LRFD	P_n/Ω_c ASD	$\phi_c P_n$ LRFD	P_n/Ω_c ASD	$\phi_c P_n$ LRFD
Effective length, KL (ft), with respect to least radius of gyration, r_y	0	93.4	140	81.0	122	67.2	101	52.1	78.2	35.8	53.8
	1	92.6	139	80.3	121	66.7	100	51.7	77.7	35.6	53.4
	2	90.2	136	78.3	118	65.1	97.9	50.5	75.9	34.8	52.3
	3	86.4	130	75.1	113	62.6	94.1	48.7	73.2	33.6	50.5
	4	81.3	122	70.9	107	59.3	89.1	46.2	69.4	32.0	48.1
	5	75.3	113	65.8	98.9	55.2	83.0	43.2	64.9	30.0	45.1
	6	68.5	103	60.1	90.3	50.6	76.1	39.8	59.8	27.8	41.7
	7	61.2	92.0	53.9	81.0	45.7	68.7	36.1	54.3	25.3	38.1
	8	53.8	80.8	47.6	71.5	40.6	61.1	32.3	48.6	22.8	34.2
	9	46.4	69.8	41.3	62.1	35.6	53.4	28.5	42.8	20.2	30.3
	10	39.4	59.3	35.3	53.0	30.6	46.0	24.7	37.1	17.6	26.5
	11	32.9	49.4	29.6	44.5	25.9	39.0	21.1	31.8	15.2	22.9
	12	27.6	41.5	24.9	37.4	21.8	32.8	17.8	26.8	12.9	19.4
	13	23.5	35.4	21.2	31.8	18.6	27.9	15.2	22.8	11.0	16.5
	14	20.3	30.5	18.3	27.4	16.0	24.1	13.1	19.7	9.48	14.2
	15	17.7	26.6	15.9	23.9	13.9	21.0	11.4	17.1	8.26	12.4
	16	15.5	23.3	14.0	21.0	12.3	18.4	10.0	15.1	7.26	10.9
	17	13.8	20.7	12.4	18.6	10.9	16.3	8.87	13.3	6.43	9.66
	18			11.0	16.6	9.69	14.6	7.91	11.9	5.73	8.62
	19							7.10	10.7	5.15	7.73
Properties											
A_g, in.^{2}		3.39		2.94		2.44		1.89		1.30	
$I_x = I_y$, in.^{4}		3.78		3.45		3.02		2.46		1.78	
$r_x = r_y$, in.		1.06		1.08		1.11		1.14		1.17	
ASD		LRFD		Note: Heavy line indicates KL/r_y equal to or greater than 200.							
Ω_c = 1.67		ϕ_c = 0.90									

Table 4-4 (continued)
Available Strength in Axial Compression, kips

F_y = 46 ksi

HSS2½-HSS2¼

Square HSS

Shape		HSS2½×2½×								HSS2¼×2¼×	
		5/16		1/4		3/16		1/8		1/4	
t_{design}, in.		0.291		0.233		0.174		0.116		0.233	
lb/ft		8.45		7.11		5.59		3.90		6.26	
Design		P_n/Ω_c	$\phi_c P_n$	P_n/Ω_c	$\phi_c P_n$	P_n/Ω_c	$\phi_c P_n$	P_n/Ω_c	$\phi_c P_n$	P_n/Ω_c	$\phi_c P_n$
		ASD	LRFD	ASD	LRFD	ASD	LRFD	ASD	LRFD	ASD	LRFD
Effective length, KL (ft), with respect to least radius of gyration, r_y	0	64.7	97.3	54.3	81.6	42.4	63.8	29.5	44.3	47.9	72.0
	1	63.9	96.1	53.6	80.6	42.0	63.1	29.2	43.8	47.2	71.0
	2	61.6	92.5	51.8	77.8	40.6	61.0	28.3	42.5	45.2	67.9
	3	57.8	86.9	48.8	73.4	38.4	57.7	26.8	40.3	41.9	63.0
	4	53.0	79.6	45.0	67.6	35.6	53.4	25.0	37.5	37.8	56.7
	5	47.3	71.2	40.4	60.8	32.2	48.4	22.7	34.2	33.0	49.6
	6	41.3	62.0	35.5	53.4	28.5	42.9	20.3	30.5	28.0	42.1
	7	35.1	52.7	30.5	45.9	24.7	37.1	17.7	26.6	23.1	34.7
	8	29.1	43.7	25.6	38.5	20.9	31.5	15.1	22.8	18.4	27.7
	9	23.5	35.2	20.9	31.5	17.4	26.1	12.7	19.1	14.6	21.9
	10	19.0	28.6	17.0	25.5	14.1	21.2	10.4	15.6	11.8	17.7
	11	15.7	23.6	14.0	21.1	11.7	17.5	8.60	12.9	9.75	14.7
	12	13.2	19.8	11.8	17.7	9.80	14.7	7.22	10.9	8.19	12.3
	13	11.2	16.9	10.0	15.1	8.35	12.6	6.15	9.25	6.98	10.5
	14	9.69	14.6	8.65	13.0	7.20	10.8	5.31	7.98		
	15			7.53	11.3	6.27	9.43	4.62	6.95		
	16							4.06	6.11		
Properties											
A_g, in.^{2}		2.35		1.97		1.54		1.07		1.74	
$I_x = I_y$, in.^{4}		1.82		1.63		1.35		0.998		1.13	
$r_x = r_y$, in.		0.880		0.908		0.937		0.965		0.806	
ASD		LRFD		Note: Heavy line indicates KL/r_y equal to or greater than 200.							
$\Omega_c = 1.67$		$\phi_c = 0.90$									

Table 4-4 (continued)

Available Strength in Axial Compression, kips

Square HSS

F_y = 46 ksi

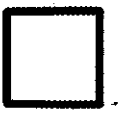

HSS2¼-HSS2

Shape		HSS2¼×2¼×				HSS2×2×					
		3/16		1/8		1/4		3/16		1/8	
t_{design}, in.		0.174		0.116		0.233		0.174		0.116	
lb/ft		4.96		3.48		5.41		4.32		3.05	
Design		P_n/Ω_c	$\phi_c P_n$	P_n/Ω_c	$\phi_c P_n$	P_n/Ω_c	$\phi_c P_n$	P_n/Ω_c	$\phi_c P_n$	P_n/Ω_c	$\phi_c P_n$
		ASD	LRFD	ASD	LRFD	ASD	LRFD	ASD	LRFD	ASD	LRFD
Effective length, KL (ft), with respect to least radius of gyration, r_y	0	37.7	56.7	26.3	39.6	41.6	62.5	32.8	49.3	23.1	34.8
	1	37.2	55.9	26.0	39.1	40.8	61.3	32.2	48.4	22.8	34.2
	2	35.7	53.6	25.0	37.6	38.5	57.8	30.5	45.8	21.6	32.5
	3	33.3	50.0	23.4	35.2	34.9	52.4	27.9	41.9	19.9	29.9
	4	30.2	45.4	21.4	32.1	30.4	45.7	24.6	36.9	17.7	26.6
	5	26.7	40.1	19.0	28.6	25.5	38.3	20.9	31.4	15.2	22.9
	6	22.9	34.4	16.5	24.8	20.6	30.9	17.1	25.7	12.7	19.0
	7	19.1	28.7	13.9	20.9	15.9	24.0	13.5	20.4	10.2	15.3
	8	15.5	23.3	11.5	17.2	12.2	18.3	10.4	15.7	7.93	11.9
	9	12.3	18.5	9.18	13.8	9.64	14.5	8.24	12.4	6.27	9.42
	10	9.97	15.0	7.43	11.2	7.81	11.7	6.67	10.0	5.08	7.63
	11	8.24	12.4	6.14	9.23	6.46	9.70	5.52	8.29	4.20	6.31
	12	6.92	10.4	5.16	7.76			4.63	6.97	3.53	5.30
	13	5.90	8.87	4.40	6.61						
	14			3.79	5.70						
Properties											
A_g, in.^{2}		1.37		0.956		1.51		1.19		0.840	
$I_x = I_y$, in.^{4}		0.953		0.712		0.747		0.641		0.486	
$r_x = r_y$, in.		0.835		0.863		0.704		0.733		0.761	

ASD	LRFD
Ω_c = 1.67	ϕ_c = 0.90

Note: Heavy line indicates KL/r_y equal to or greater than 200.

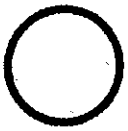

HSS20-HSS16

Table 4-5
Available Strength in Axial Compression, kips
Round HSS

F_y = 42 ksi

Shape		HSS20×				HSS18×				HSS16×			
		0.500		0.375		0.500		0.375		0.625		0.500	
t_{design}, in.		0.465		0.349		0.465		0.349		0.581		0.465	
lb/ft		104		78.7		93.5		70.7		103		82.9	
Design		P_n/Ω_c	$\phi_c P_n$	P_n/Ω_c	$\phi_c P_n$	P_n/Ω_c	$\phi_c P_n$	P_n/Ω_c	$\phi_c P_n$	P_n/Ω_c	$\phi_c P_n$	P_n/Ω_c	$\phi_c P_n$
		ASD	LRFD	ASD	LRFD	ASD	LRFD	ASD	LRFD	ASD	LRFD	ASD	LRFD
Effective length, KL (ft), with respect to least radius of gyration, r	0	717	1080	541	813	644	968	488	733	707	1060	571	858
	6	712	1070	537	807	639	960	484	727	699	1050	565	849
	7	710	1070	536	805	637	957	483	725	697	1050	563	846
	8	708	1060	534	803	634	954	481	723	693	1040	560	842
	9	706	1060	533	801	632	950	479	720	690	1040	557	838
	10	704	1060	531	798	629	946	477	717	686	1030	554	833
	11	701	1050	529	795	626	941	475	713	682	1020	551	828
	12	698	1050	527	792	623	936	472	710	677	1020	547	823
	13	695	1040	524	788	619	931	470	706	672	1010	543	817
	14	691	1040	522	784	615	925	467	701	667	1000	539	810
	15	688	1030	519	780	611	919	464	697	661	994	534	803
	16	684	1030	516	775	607	912	460	692	655	984	530	796
	17	679	1020	513	771	602	905	457	687	649	975	524	788
	18	675	1010	510	766	598	898	453	681	642	965	519	780
	19	670	1010	506	761	593	891	449	676	635	954	514	772
	20	666	1000	503	755	587	883	446	670	628	943	508	763
	21	661	993	499	750	582	874	441	663	620	932	502	754
	22	655	985	495	744	576	866	437	657	612	920	495	744
	23	650	977	491	738	570	857	433	650	604	908	489	735
	24	644	968	487	731	564	848	428	643	596	895	482	725
	25	638	960	482	725	558	838	423	636	587	882	475	714
	26	632	951	478	718	551	828	418	629	578	869	468	704
	27	626	941	473	711	544	818	413	621	569	856	461	693
	28	620	932	468	704	538	808	408	614	560	842	454	682
	29	613	922	464	697	531	797	403	606	551	828	446	670
	30	607	912	459	689	523	787	398	598	541	813	438	659
	32	593	891	448	674	509	765	387	581	522	784	423	635
	34	579	870	438	658	493	742	375	564	502	754	407	611
	36	564	847	426	641	478	718	363	546	481	723	390	587
	38	549	824	415	624	462	694	351	528	460	692	374	562
	40	533	801	403	606	446	670	339	510	440	661	357	537
Properties													
A_g, in.^{2}		28.5		21.5		25.6		19.4		28.1		22.7	
I, in.^{4}		1360		1040		985		754		838		685	
r, in.		6.91		6.95		6.20		6.24		5.46		5.49	

ASD	LRFD
$\Omega_c = 1.67$	$\phi_c = 0.90$

Table 4-5 (continued)

Available Strength in Axial Compression, kips

Round HSS

F_y = 42 ksi

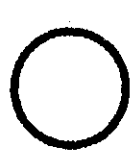

HSS16–HSS14

Shape		HSS16×								HSS14×			
		0.438		0.375		0.312		0.250		0.625		0.500	
t_{design}, in.		0.407		0.349		0.291		0.233		0.581		0.465	
lb/ft		72.9		62.6		52.3		42.1		89.4		72.2	
Design		P_n/Ω_c ASD	$\phi_c P_n$ LRFD	P_n/Ω_c ASD	$\phi_c P_n$ LRFD	P_n/Ω_c ASD	$\phi_c P_n$ LRFD	P_n/Ω_c ASD	$\phi_c P_n$ LRFD	P_n/Ω_c ASD	$\phi_c P_n$ LRFD	P_n/Ω_c ASD	$\phi_c P_n$ LRFD
Effective length, KL (ft), with respect to least radius of gyration, r	0	500	752	433	650	362	544	289	435	616	926	498	748
	6	495	744	428	643	358	539	286	430	608	913	491	738
	7	493	742	426	641	357	537	285	429	604	908	489	734
	8	491	738	425	638	356	534	284	427	601	903	486	730
	9	489	735	423	635	354	532	283	425	597	897	483	725
	10	486	731	420	632	352	529	281	423	592	891	479	720
	11	483	726	418	628	350	526	279	420	588	883	475	714
	12	480	721	415	624	347	522	278	417	582	875	471	708
	13	476	716	412	619	345	519	276	414	577	867	467	701
	14	473	710	409	614	342	515	274	411	571	858	462	694
	15	469	704	405	609	339	510	271	408	564	848	457	686
	16	465	698	402	604	336	506	269	404	557	838	451	678
	17	460	691	398	598	333	501	266	400	550	827	445	670
	18	455	684	394	592	330	496	264	396	543	816	439	661
	19	451	677	390	586	326	491	261	392	535	804	433	651
	20	445	669	385	579	323	485	258	388	527	792	427	641
	21	440	662	381	572	319	480	255	384	518	779	420	631
	22	435	653	376	565	315	474	252	379	510	766	413	621
	23	429	645	371	558	311	468	249	374	501	753	406	610
	24	423	636	366	550	307	461	246	369	492	739	399	599
	25	417	627	361	543	303	455	242	364	482	725	391	588
	26	411	618	356	535	298	448	239	359	473	711	384	577
	27	405	608	350	527	294	442	235	353	463	696	376	565
	28	398	599	345	518	289	435	231	348	453	681	368	553
	29	392	589	339	510	284	428	228	342	443	666	360	541
	30	385	579	333	501	280	420	224	337	433	651	352	529
	32	371	558	322	484	270	406	216	325	412	620	336	504
	34	357	537	310	465	260	391	208	313	392	589	319	479
	36	343	516	297	447	250	375	200	301	371	557	302	454
	38	329	494	285	428	239	360	192	288	350	526	285	429
	40	314	472	272	409	229	344	184	276	329	495	269	404
Properties													
A_g, in.^{2}		19.9		17.2		14.4		11.5		24.5		19.8	
I, in.^{4}		606		526		443		359		552		453	
r, in.		5.51		5.53		5.55		5.58		4.75		4.79	
ASD		LRFD											
Ω_c = 1.67		ϕ_c = 0.90											

HSS14-
HSS12.750

Table 4-5 (continued)
Available Strength in Axial Compression, kips
Round HSS

F_y = 42 ksi

Shape		HSS14×						HSS12.750×					
		0.375		0.312		0.250		0.500		0.375		0.250	
t_{design}, in.		0.349		0.291		0.233		0.465		0.349		0.233	
lb/ft		54.6		45.7		36.8		65.5		49.6		33.4	
Design		P_n/Ω_c	$\phi_c P_n$	P_n/Ω_c	$\phi_c P_n$	P_n/Ω_c	$\phi_c P_n$	P_n/Ω_c	$\phi_c P_n$	P_n/Ω_c	$\phi_c P_n$	P_n/Ω_c	$\phi_c P_n$
		ASD	LRFD	ASD	LRFD	ASD	LRFD	ASD	LRFD	ASD	LRFD	ASD	LRFD
Effective length, KL (ft), with respect to least radius of gyration, r	0	377	567	314	472	254	382	450	677	342	514	230	346
	6	372	559	310	466	251	377	443	665	336	506	227	341
	7	370	557	309	464	249	375	440	661	334	503	225	339
	8	368	553	307	461	248	373	437	657	332	499	224	336
	9	366	550	305	458	246	370	433	651	330	495	222	334
	10	363	546	303	455	245	368	430	646	327	491	220	331
	11	360	542	300	451	243	365	425	639	324	486	218	328
	12	357	537	298	448	241	362	421	633	320	481	216	324
	13	354	532	295	443	238	358	416	625	317	476	213	321
	14	350	526	292	439	236	355	411	617	313	470	211	317
	15	346	521	289	434	234	351	405	609	308	464	208	313
	16	342	515	286	429	231	347	399	600	304	457	205	309
	17	338	508	282	424	228	343	393	591	300	450	202	304
	18	334	501	278	418	225	338	387	582	295	443	199	299
	19	329	494	274	413	222	334	380	572	290	436	196	294
	20	324	487	270	407	219	329	373	561	285	428	192	289
	21	319	480	266	400	215	324	366	551	279	420	189	284
	22	314	472	262	394	212	319	359	540	274	412	185	278
	23	309	464	258	387	209	313	352	528	268	403	182	273
	24	303	456	253	380	205	308	344	517	263	395	178	267
	25	298	447	249	374	201	302	336	505	257	386	174	261
	26	292	439	244	366	197	297	328	493	251	377	170	255
	27	286	430	239	359	194	291	320	481	245	368	166	249
	28	280	421	234	352	190	285	312	469	239	359	162	243
	29	274	412	229	344	186	279	304	457	233	349	158	237
	30	268	403	224	337	182	273	296	444	226	340	154	231
	32	256	385	214	322	173	261	279	419	214	321	145	218
	34	243	366	204	306	165	248	262	394	201	302	137	206
	36	231	347	193	290	157	235	246	369	189	284	128	193
	38	218	328	183	275	148	223	229	345	176	265	120	181
	40	206	309	172	259	140	210	213	320	164	247	112	168
Properties													
A_g, in.^{2}		15.0		12.5		10.1		17.9		13.6		9.16	
I, in.^{4}		349		295		239		339		262		180	
r, in.		4.83		4.85		4.87		4.35		4.39		4.43	

ASD	LRFD
Ω_c = 1.67	ϕ_c = 0.90

Table 4-5 (continued)

Available Strength in Axial Compression, kips

Round HSS

F_y = 42 ksi

HSS10.750-HSS10

Shape		HSS10.750×						HSS10×					
		0.500		0.375		0.250		0.625		0.500		0.375	
t_{design}, in.		0.465		0.349		0.233		0.581		0.465		0.349	
lb/ft		54.8		41.6		28.1		62.6		50.8		38.6	
Design		P_n/Ω_c	$\phi_c P_n$	P_n/Ω_c	$\phi_c P_n$	P_n/Ω_c	$\phi_c P_n$	P_n/Ω_c	$\phi_c P_n$	P_n/Ω_c	$\phi_c P_n$	P_n/Ω_c	$\phi_c P_n$
		ASD	LRFD	ASD	LRFD	ASD	LRFD	ASD	LRFD	ASD	LRFD	ASD	LRFD
Effective length, KL (ft), with respect to least radius of gyration, r	0	377	567	287	431	194	291	433	650	350	525	267	401
	6	368	554	280	421	189	284	420	632	340	511	259	390
	7	365	549	278	417	188	282	416	625	337	506	257	386
	8	361	543	275	413	186	279	411	618	333	500	254	382
	9	357	537	272	409	184	276	406	610	328	493	251	377
	10	353	530	269	404	182	273	400	601	324	486	247	371
	11	348	523	265	398	179	269	393	591	318	478	243	365
	12	343	515	261	392	177	265	386	580	313	470	239	359
	13	337	507	257	386	174	261	378	569	307	461	234	352
	14	331	497	252	379	171	257	370	557	300	451	230	345
	15	325	488	248	372	168	252	362	544	294	441	225	338
	16	318	478	243	365	164	247	353	531	287	431	219	330
	17	311	468	237	357	161	242	344	517	280	420	214	322
	18	304	457	232	349	157	237	335	503	272	409	208	313
	19	296	446	226	340	154	231	325	488	264	397	203	304
	20	289	434	221	332	150	225	315	473	256	385	197	296
	21	281	422	215	323	146	220	305	458	248	373	191	287
	22	273	410	209	314	142	214	295	443	240	361	184	277
	23	265	398	203	305	138	208	284	427	232	349	178	268
	24	257	386	197	296	134	201	274	412	224	336	172	259
	25	249	374	191	287	130	195	264	396	215	324	166	249
	26	240	361	184	277	126	189	253	380	207	311	159	240
	27	232	349	178	268	122	183	243	365	199	299	153	230
	28	224	336	172	258	117	176	232	349	191	286	147	221
	29	215	323	166	249	113	170	222	334	182	274	141	211
	30	207	311	159	239	109	164	212	319	174	262	134	202
	32	190	286	147	221	101	151	192	289	158	238	122	184
	34	174	262	135	203	92.5	139	173	260	143	215	111	166
	36	159	239	123	185	84.6	127	155	232	128	192	99.3	149
	38	144	216	112	168	77.0	116	139	208	115	173	89.1	134
	40	130	195	101	151	69.5	104	125	188	104	156	80.4	121
Properties													
A_g, in.^{2}		15.0		11.4		7.70		17.2		13.9		10.6	
I, in.^{4}		199		154		106		191		159		123	
r, in.		3.64		3.68		3.72		3.34		3.38		3.41	

ASD	LRFD
Ω_c = 1.67	ϕ_c = 0.90

HSS10-HSS9.625

Table 4-5 (continued)
Available Strength in Axial Compression, kips
Round HSS

F_y = 42 ksi

Shape		HSS10×						HSS9.625×					
		0.312		0.250		0.188		0.500		0.375		0.312	
t_{design}, in.		0.291		0.233		0.174		0.465		0.349		0.291	
lb/ft		32.3		26.1		19.7		48.8		37.1		31.1	
		P_n/Ω_c	$\phi_c P_n$	P_n/Ω_c	$\phi_c P_n$	P_n/Ω_c	$\phi_c P_n$	P_n/Ω_c	$\phi_c P_n$	P_n/Ω_c	$\phi_c P_n$	P_n/Ω_c	$\phi_c P_n$
Design		ASD	LRFD	ASD	LRFD	ASD	LRFD	ASD	LRFD	ASD	LRFD	ASD	LRFD
Effective length, KL (ft), with respect to least radius of gyration, r	0	223	336	180	270	135	203	337	507	257	386	215	322
	6	217	327	175	263	132	198	327	491	249	374	208	313
	7	215	324	173	261	130	196	323	486	246	370	206	310
	8	213	320	171	258	129	194	319	480	243	366	204	306
	9	210	316	169	254	127	191	315	473	240	361	201	302
	10	207	311	167	251	125	189	310	466	236	355	198	297
	11	204	306	164	247	124	186	304	457	232	349	194	292
	12	200	301	162	243	121	183	299	449	228	343	191	287
	13	197	296	159	238	119	179	292	439	223	336	187	281
	14	193	290	155	234	117	176	286	429	218	328	183	275
	15	189	283	152	229	114	172	279	419	213	320	179	269
	16	184	277	149	223	112	168	272	408	208	312	174	262
	17	180	270	145	218	109	164	264	397	202	304	170	255
	18	175	263	141	212	106	160	257	386	197	295	165	248
	19	170	256	138	207	104	156	249	374	191	287	160	240
	20	165	248	134	201	101	151	241	362	185	278	155	233
	21	160	241	130	195	97.7	147	232	349	179	268	150	225
	22	155	233	126	189	94.6	142	224	337	172	259	145	218
	23	150	226	121	182	91.6	138	216	324	166	250	140	210
	24	145	218	117	176	88.5	133	207	312	160	240	134	202
	25	140	210	113	170	85.3	128	199	299	153	231	129	194
	26	134	202	109	164	82.2	124	191	287	147	221	124	186
	27	129	194	105	157	79.1	119	182	274	141	212	119	178
	28	124	186	100	151	75.9	114	174	262	135	202	113	171
	29	119	178	96.3	145	72.8	109	166	249	128	193	108	163
	30	114	171	92.1	138	69.7	105	158	237	122	184	103	155
	32	103	155	84.0	126	63.7	95.7	142	214	111	166	93.4	140
	34	93.7	141	76.2	114	57.8	86.8	127	191	99.1	149	83.9	126
	36	84.1	126	68.5	103	52.1	78.3	113	170	88.4	133	74.8	112
	38	75.5	114	61.5	92.5	46.7	70.2	102	153	79.3	119	67.1	101
	40	68.2	102	55.5	83.4	42.2	63.4	91.8	138	71.6	108	60.6	91.1
Properties													
A_g, in.^{2}		8.88		7.15		5.37		13.4		10.2		8.53	
I, in.^{4}		105		85.3		64.8		141		110		93.0	
r, in.		3.43		3.45		3.47		3.24		3.28		3.30	
ASD		LRFD											
Ω_c = 1.67		ϕ_c = 0.90											

Table 4-5 (continued)
Available Strength in Axial Compression, kips
Round HSS

F_y = 42 ksi

HSS9.625-
HSS8.625

Shape		HSS9.625×				HSS8.625×							
		0.250		0.188		0.625		0.500		0.375		0.322	
t_{design}, in.		0.233		0.174		0.581		0.465		0.349		0.300	
lb/ft		25.1		19.0		53.5		43.4		33.1		28.6	
Design		P_n/Ω_c ASD	$\phi_c P_n$ LRFD	P_n/Ω_c ASD	$\phi_c P_n$ LRFD	P_n/Ω_c ASD	$\phi_c P_n$ LRFD	P_n/Ω_c ASD	$\phi_c P_n$ LRFD	P_n/Ω_c ASD	$\phi_c P_n$ LRFD	P_n/Ω_c ASD	$\phi_c P_n$ LRFD
Effective length, KL (ft), with respect to least radius of gyration, r	0	173	260	130	195	370	556	299	450	228	343	197	297
	6	168	252	126	190	355	534	288	433	220	330	190	286
	7	166	250	125	188	350	527	284	427	217	326	188	282
	8	164	247	124	186	345	518	280	420	214	321	185	278
	9	162	243	122	183	338	509	275	413	210	315	182	273
	10	159	240	120	181	332	498	269	405	206	309	178	268
	11	157	236	118	178	324	487	263	396	201	303	175	262
	12	154	231	116	174	316	475	257	386	197	296	171	256
	13	151	227	114	171	308	462	250	376	192	288	166	250
	14	148	222	111	167	299	449	243	366	186	280	162	243
	15	144	217	109	163	289	435	236	354	181	272	157	236
	16	141	211	106	160	280	420	228	343	175	263	152	229
	17	137	206	103	155	270	406	220	331	169	255	147	221
	18	133	200	101	151	260	390	212	319	163	246	142	213
	19	129	194	97.7	147	250	375	204	307	157	236	137	206
	20	125	188	94.7	142	239	359	196	294	151	227	131	198
	21	121	182	91.7	138	229	344	188	282	145	218	126	190
	22	117	176	88.6	133	218	328	179	269	139	208	121	181
	23	113	170	85.5	128	208	312	171	257	132	199	115	173
	24	109	164	82.4	124	197	297	163	244	126	189	110	165
	25	105	157	79.2	119	187	281	154	232	120	180	105	157
	26	100	151	76.1	114	177	266	146	220	114	171	99.3	149
	27	96.3	145	72.9	110	167	251	138	208	108	162	94.1	141
	28	92.1	138	69.8	105	157	237	130	196	102	153	89.0	134
	29	88.0	132	66.8	100	148	222	123	185	95.9	144	84.0	126
	30	83.9	126	63.7	95.7	138	208	115	173	90.3	136	79.1	119
	32	76.0	114	57.7	86.8	122	183	101	152	79.4	119	69.6	105
	34	68.3	103	52.0	78.2	108	162	89.7	135	70.3	106	61.7	92.7
	36	61.0	91.7	46.5	69.8	96.2	145	80.0	120	62.7	94.3	55.0	82.7
	38	54.7	82.3	41.7	62.7	86.3	130	71.8	108	56.3	84.6	49.4	74.2
	40	49.4	74.2	37.6	56.6	77.9	117	64.8	97.5	50.8	76.3	44.6	67.0
Properties													
A_g, in.^{2}		6.87		5.17		14.7		11.9		9.07		7.85	
I, in.^{4}		75.9		57.7		119		100		77.8		68.1	
r, in.		3.32		3.34		2.85		2.89		2.93		2.95	

ASD	LRFD
Ω_c = 1.67	ϕ_c = 0.90

HSS8.625-
HSS7.500

Table 4-5 (continued)
Available Strength in Axial Compression, kips
Round HSS

F_y = 42 ksi

Shape		HSS8.625×				HSS7.625×				HSS7.500×			
		0.250		0.188		0.375		0.328		0.500		0.375	
t_{design}, in.		0.233		0.174		0.349		0.305		0.465		0.349	
lb/ft		22.4		17.0		29.1		25.6		37.4		28.6	
Design		P_n/Ω_c	$\phi_c P_n$	P_n/Ω_c	$\phi_c P_n$	P_n/Ω_c	$\phi_c P_n$	P_n/Ω_c	$\phi_c P_n$	P_n/Ω_c	$\phi_c P_n$	P_n/Ω_c	$\phi_c P_n$
		ASD	LRFD	ASD	LRFD	ASD	LRFD	ASD	LRFD	ASD	LRFD	ASD	LRFD
Effective length, KL (ft), with respect to least radius of gyration, r	0	154	232	116	175	201	302	176	265	259	389	197	296
	6	149	224	112	169	191	288	168	253	246	370	188	282
	7	147	221	111	166	188	283	165	248	242	363	184	277
	8	145	218	109	164	184	277	162	244	236	355	180	271
	9	142	214	107	161	180	271	158	238	231	347	176	265
	10	140	210	105	158	176	264	155	232	225	338	172	258
	11	137	206	103	155	171	257	150	226	218	328	167	251
	12	134	201	101	151	166	249	146	219	211	317	162	243
	13	130	196	98.3	148	160	241	141	212	204	306	156	235
	14	127	191	95.7	144	155	232	136	205	196	294	150	226
	15	123	185	93.0	140	149	224	131	197	188	282	144	217
	16	119	180	90.2	136	143	215	126	189	180	270	138	208
	17	116	174	87.3	131	137	205	120	181	172	258	132	199
	18	112	168	84.3	127	130	196	115	173	163	245	126	189
	19	108	162	81.3	122	124	187	110	165	155	233	120	180
	20	103	155	78.2	118	118	177	104	156	146	220	113	171
	21	99.2	149	75.1	113	112	168	98.6	148	138	208	107	161
	22	95.0	143	72.0	108	105	159	93.1	140	130	195	101	152
	23	90.9	137	68.8	103	99.4	149	87.8	132	122	183	94.9	143
	24	86.7	130	65.7	98.8	93.4	140	82.5	124	114	171	89.0	134
	25	82.5	124	62.6	94.1	87.5	131	77.3	116	106	160	83.1	125
	26	78.4	118	59.5	89.5	81.7	123	72.3	109	98.6	148	77.5	116
	27	74.3	112	56.5	84.9	76.1	114	67.3	101	91.4	137	71.9	108
	28	70.4	106	53.5	80.4	70.7	106	62.6	94.1	85.0	128	66.8	100
	29	66.4	99.9	50.6	76.0	65.9	99.1	58.4	87.7	79.3	119	62.3	93.6
	30	62.6	94.1	47.7	71.7	61.6	92.6	54.5	82.0	74.1	111	58.2	87.5
	32	55.2	83.0	42.1	63.3	54.1	81.4	47.9	72.0	65.1	97.8	51.2	76.9
	34	48.9	73.5	37.3	56.1	48.0	72.1	42.5	63.8	57.7	86.7	45.3	68.1
	36	43.6	65.6	33.3	50.0	42.8	64.3	37.9	56.9	51.4	77.3	40.4	60.7
	38	39.2	58.8	29.9	44.9	38.4	57.7	34.0	51.1	46.2	69.4	36.3	54.5
	40	35.3	53.1	26.9	40.5	34.7	52.1	30.7	46.1	41.7	62.6	32.7	49.2
Properties													
A_g, in.^{2}		6.14		4.62		7.98		7.01		10.3		7.84	
I, in.^{4}		54.1		41.3		52.9		47.1		63.9		50.2	
r, in.		2.97		2.99		2.58		2.59		2.49		2.53	
ASD		LRFD											
Ω_c = 1.67		ϕ_c = 0.90											

Table 4-5 (continued)

Available Strength in Axial Compression, kips

Round HSS

F_y = 42 ksi

HSS7.500-HSS7

Shape		HSS7.500×						HSS7×					
		0.312		0.250		0.188		0.500		0.375		0.312	
t_{design}, in.		0.291		0.233		0.174		0.465		0.349		0.291	
lb/ft		24.0		19.4		14.7		34.7		26.6		22.3	
Design		P_n/Ω_c ASD	$\phi_c P_n$ LRFD	P_n/Ω_c ASD	$\phi_c P_n$ LRFD	P_n/Ω_c ASD	$\phi_c P_n$ LRFD	P_n/Ω_c ASD	$\phi_c P_n$ LRFD	P_n/Ω_c ASD	$\phi_c P_n$ LRFD	P_n/Ω_c ASD	$\phi_c P_n$ LRFD
Effective length, KL (ft), with respect to least radius of gyration, r	0	166	249	134	201	101	151	240	361	183	276	154	232
	6	158	237	127	192	95.9	144	226	340	173	260	146	219
	7	155	233	125	188	94.3	142	222	333	170	255	143	215
	8	152	228	123	185	92.5	139	216	325	165	249	139	210
	9	148	223	120	180	90.4	136	210	316	161	242	136	204
	10	145	217	117	176	88.2	133	204	306	156	235	132	198
	11	141	211	114	171	85.8	129	197	296	151	227	127	192
	12	136	205	110	166	83.2	125	190	285	146	219	123	185
	13	132	198	107	160	80.5	121	182	273	140	210	118	178
	14	127	191	103	155	77.7	117	174	262	134	201	113	170
	15	122	183	99.0	149	74.8	112	166	249	128	192	108	163
	16	117	176	95.0	143	71.8	108	158	237	122	183	103	155
	17	112	168	90.9	137	68.7	103	149	225	115	173	97.8	147
	18	107	160	86.7	130	65.6	98.6	141	212	109	164	92.6	139
	19	101	152	82.5	124	62.5	93.9	133	199	103	155	87.3	131
	20	96.2	145	78.3	118	59.4	89.2	124	187	96.6	145	82.1	123
	21	91.0	137	74.1	111	56.2	84.5	116	175	90.5	136	77.0	116
	22	85.8	129	70.0	105	53.1	79.9	108	163	84.5	127	71.9	108
	23	80.7	121	65.9	99.0	50.1	75.3	101	151	78.6	118	67.0	101
	24	75.7	114	61.9	93.0	47.1	70.8	93.1	140	72.9	110	62.2	93.6
	25	70.8	106	57.9	87.1	44.1	66.3	85.8	129	67.2	101	57.5	86.4
	26	66.1	99.3	54.1	81.3	41.3	62.0	79.4	119	62.2	93.4	53.2	79.9
	27	61.4	92.2	50.3	75.6	38.4	57.7	73.6	111	57.6	86.6	49.3	74.1
	28	57.1	85.7	46.8	70.3	35.7	53.7	68.4	103	53.6	80.6	45.8	68.9
	29	53.2	79.9	43.6	65.5	33.3	50.1	63.8	95.9	50.0	75.1	42.7	64.2
	30	49.7	74.7	40.8	61.3	31.1	46.8	59.6	89.6	46.7	70.2	39.9	60.0
	32	43.7	65.7	35.8	53.8	27.4	41.1	52.4	78.8	41.0	61.7	35.1	52.8
	34	38.7	58.2	31.7	47.7	24.2	36.4	46.4	69.8	36.4	54.6	31.1	46.7
	36	34.5	51.9	28.3	42.5	21.6	32.5	41.4	62.2	32.4	48.7	27.7	41.7
	38	31.0	46.6	25.4	38.2	19.4	29.2	37.2	55.8	29.1	43.7	24.9	37.4
	40	28.0	42.0	22.9	34.5	17.5	26.3						
Properties													
A_g, in.^{2}		6.59		5.32		4.00		9.55		7.29		6.13	
I, in.^{4}		42.9		35.2		26.9		51.2		40.4		34.6	
r, in.		2.55		2.57		2.59		2.32		2.35		2.37	

ASD	LRFD
Ω_c = 1.67	ϕ_c = 0.90

Note: Heavy line indicates KL/r equal to or greater than 200.

HSS7–
HSS6.875

Table 4-5 (continued)
Available Strength in Axial Compression, kips
Round HSS

F_y = 42 ksi

Shape		HSS7×						HSS6.875×					
		0.250		0.188		0.125		0.500		0.375		0.312	
t_{design}, in.		0.233		0.174		0.116		0.465		0.349		0.291	
lb/ft		18.0		13.7		9.19		34.1		26.1		21.9	
Design		P_n/Ω_c ASD	$\phi_c P_n$ LRFD	P_n/Ω_c ASD	$\phi_c P_n$ LRFD	P_n/Ω_c ASD	$\phi_c P_n$ LRFD	P_n/Ω_c ASD	$\phi_c P_n$ LRFD	P_n/Ω_c ASD	$\phi_c P_n$ LRFD	P_n/Ω_c ASD	$\phi_c P_n$ LRFD
Effective length, KL (ft), with respect to least radius of gyration, r	0	124	187	93.8	141	63.1	94.9	235	354	180	271	151	228
	6	118	177	88.8	133	59.8	89.9	221	333	170	255	143	215
	7	115	173	87.1	131	58.7	88.2	216	325	166	250	140	210
	8	113	169	85.1	128	57.4	86.2	211	317	162	243	136	205
	9	110	165	82.9	125	55.9	84.0	205	308	157	237	133	199
	10	107	160	80.6	121	54.3	81.7	198	298	153	229	129	193
	11	103	155	78.0	117	52.7	79.2	191	287	147	221	124	187
	12	99.6	150	75.3	113	50.9	76.5	184	276	142	212	120	180
	13	95.8	144	72.5	109	49.0	73.7	176	265	136	205	115	173
	14	91.9	138	69.6	105	47.1	70.7	168	253	130	196	110	165
	15	87.9	132	66.6	100	45.1	67.7	160	240	124	186	105	158
	16	83.8	126	63.5	95.5	43.0	64.7	152	228	118	177	99.8	150
	17	79.6	120	60.4	90.8	40.9	61.5	143	215	112	168	94.5	142
	18	75.4	113	57.3	86.1	38.9	58.4	135	203	105	158	89.3	134
	19	71.2	107	54.1	81.4	36.8	55.3	127	190	99.0	149	84.1	126
	20	67.0	101	51.0	76.7	34.7	52.1	118	178	92.8	139	78.9	119
	21	62.9	94.5	47.9	72.0	32.6	49.0	110	166	86.7	130	73.8	111
	22	58.8	88.4	44.9	67.5	30.6	46.0	103	154	80.7	121	68.8	103
	23	54.9	82.5	41.9	63.0	28.6	43.0	94.9	143	74.9	113	64.0	96.1
	24	51.0	76.7	39.0	58.7	26.6	40.0	87.4	131	69.2	104	59.2	89.0
	25	47.2	71.0	36.2	54.4	24.8	37.2	80.6	121	63.8	95.9	54.6	82.0
	26	43.7	65.6	33.5	50.3	22.9	34.4	74.5	112	59.0	88.7	50.5	75.8
	27	40.5	60.8	31.0	46.6	21.2	31.9	69.1	104	54.7	82.2	46.8	70.3
	28	37.6	56.6	28.8	43.4	19.7	29.7	64.2	96.5	50.9	76.5	43.5	65.4
	29	35.1	52.7	26.9	40.4	18.4	27.6	59.9	90.0	47.4	71.3	40.6	61.0
	30	32.8	49.3	25.1	37.8	17.2	25.8	55.9	84.1	44.3	66.6	37.9	57.0
	32	28.8	43.3	22.1	33.2	15.1	22.7	49.2	73.9	38.9	58.5	33.3	50.1
	34	25.5	38.4	19.6	29.4	13.4	20.1	43.5	65.5	34.5	51.9	29.5	44.4
	36	22.8	34.2	17.4	26.2	11.9	17.9	38.8	58.4	30.8	46.2	26.3	39.6
	38	20.4	30.7	15.7	23.5	10.7	16.1			27.6	41.5	23.6	35.5
	40			14.1	21.2	9.67	14.5						
Properties													
A_g, in.^{2}		4.95		3.73		2.51		9.36		7.16		6.02	
I, in.^{4}		28.4		21.7		14.9		48.3		38.2		32.7	
r, in.		2.39		2.41		2.43		2.27		2.31		2.33	
ASD		LRFD		Note: Heavy line indicates KL/r equal to or greater than 200.									
$\Omega_c = 1.67$		$\phi_c = 0.90$											

Table 4-5 (continued)
Available Strength in Axial Compression, kips
Round HSS

F_y = 42 ksi

HSS6.875-HSS6.625

Shape		HSS6.875×				HSS6.625×					
		0.250		0.188		0.500		0.432		0.375	
t_{design}, in.		0.233		0.174		0.465		0.402		0.349	
lb/ft		17.7		13.4		32.7		28.6		25.1	
Design		P_n/Ω_c	$\phi_c P_n$	P_n/Ω_c	$\phi_c P_n$	P_n/Ω_c	$\phi_c P_n$	P_n/Ω_c	$\phi_c P_n$	P_n/Ω_c	$\phi_c P_n$
		ASD	LRFD	ASD	LRFD	ASD	LRFD	ASD	LRFD	ASD	LRFD
Effective length, KL (ft), with respect to least radius of gyration, r	0	122	184	92.0	138	226	340	198	297	173	260
	6	115	173	87.0	131	212	318	185	278	162	244
	7	113	170	85.2	128	207	311	181	272	158	238
	8	110	166	83.2	125	201	302	176	264	154	232
	9	107	161	81.0	122	195	293	170	256	150	225
	10	104	157	78.6	118	188	282	165	247	145	217
	11	101	151	76.1	114	181	272	158	238	139	209
	12	97.1	146	73.4	110	173	260	152	228	134	201
	13	93.2	140	70.5	106	165	248	145	218	128	192
	14	89.3	134	67.6	102	157	236	138	208	122	183
	15	85.2	128	64.6	97.1	149	224	131	197	116	174
	16	81.1	122	61.5	92.5	141	211	124	186	109	164
	17	76.9	116	58.4	87.8	132	199	117	175	103	155
	18	72.7	109	55.3	83.1	124	186	109	164	96.7	145
	19	68.6	103	52.1	78.4	116	174	102	154	90.5	136
	20	64.4	96.8	49.0	73.7	108	162	95.2	143	84.4	127
	21	60.3	90.7	46.0	69.1	99.6	150	88.3	133	78.4	118
	22	56.3	84.6	43.0	64.6	92.0	138	81.6	123	72.6	109
	23	52.4	78.7	40.0	60.1	84.4	127	75.1	113	66.9	101
	24	48.6	73.0	37.2	55.9	77.5	116	68.9	104	61.4	92.4
	25	44.8	67.4	34.3	51.6	71.4	107	63.5	95.5	56.6	85.1
	26	41.4	62.3	31.7	47.7	66.0	99.3	58.7	88.3	52.4	78.7
	27	38.4	57.8	29.4	44.2	61.2	92.0	54.5	81.9	48.5	73.0
	28	35.7	53.7	27.4	41.1	56.9	85.6	50.6	76.1	45.1	67.9
	29	33.3	50.1	25.5	38.3	53.1	79.8	47.2	71.0	42.1	63.3
	30	31.1	46.8	23.8	35.8	49.6	74.6	44.1	66.3	39.3	59.1
	32	27.4	41.1	21.0	31.5	43.6	65.5	38.8	58.3	34.6	51.9
	34	24.2	36.4	18.6	27.9	38.6	58.0	34.4	51.6	30.6	46.0
	36	21.6	32.5	16.6	24.9	34.4	51.8	30.6	46.1	27.3	41.0
	38	19.4	29.2	14.9	22.3						
Properties											
A_g, in.^{2}		4.86		3.66		9.00		7.86		6.88	
I, in.^{4}		26.8		20.6		42.9		38.2		34.0	
r, in.		2.35		2.37		2.18		2.20		2.22	
ASD		LRFD		Note: Heavy line indicates KL/r equal to or greater than 200.							
Ω_c = 1.67		ϕ_c = 0.90									

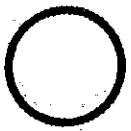

HSS6.625

Table 4-5 (continued)
Available Strength in Axial Compression, kips
Round HSS

F_y = 42 ksi

Shape		HSS6.625×									
		0.312		0.280		0.250		0.188		0.125	
t_{design}, in.		0.291		0.260		0.233		0.174		0.116	
lb/ft		21.1		19.0		17.0		12.9		8.69	
Design		P_n/Ω_c	$\phi_c P_n$	P_n/Ω_c	$\phi_c P_n$	P_n/Ω_c	$\phi_c P_n$	P_n/Ω_c	$\phi_c P_n$	P_n/Ω_c	$\phi_c P_n$
		ASD	LRFD	ASD	LRFD	ASD	LRFD	ASD	LRFD	ASD	LRFD
Effective length, KL (ft), with respect to least radius of gyration, r	0	146	219	131	197	118	177	88.8	133	59.6	89.6
	6	137	205	123	185	111	166	83.5	126	56.1	84.4
	7	134	201	120	180	108	163	81.7	123	54.9	82.5
	8	130	196	117	176	105	158	79.6	120	53.6	80.5
	9	126	190	114	171	102	154	77.3	116	52.1	78.2
	10	122	183	110	165	99.0	149	74.9	113	50.4	75.8
	11	118	177	106	159	95.5	143	72.3	109	48.7	73.2
	12	113	170	102	153	91.7	138	69.5	104	46.9	70.4
	13	108	162	97.3	146	87.8	132	66.6	100	44.9	67.5
	14	103	155	92.9	140	83.8	126	63.6	95.6	43.0	64.6
	15	97.9	147	88.3	133	79.7	120	60.5	91.0	40.9	61.5
	16	92.7	139	83.6	126	75.6	114	57.4	86.3	38.9	58.4
	17	87.5	132	78.9	119	71.4	107	54.3	81.6	36.8	55.3
	18	82.3	124	74.3	112	67.2	101	51.2	76.9	34.7	52.1
	19	77.1	116	69.6	105	63.0	94.7	48.0	72.2	32.6	49.0
	20	71.9	108	65.0	97.7	58.9	88.5	45.0	67.6	30.5	45.9
	21	66.9	101	60.5	91.0	54.8	82.4	41.9	63.0	28.5	42.9
	22	62.0	93.3	56.1	84.4	50.9	76.5	39.0	58.6	26.5	39.9
	23	57.3	86.1	51.9	78.0	47.1	70.8	36.1	54.2	24.6	37.0
	24	52.6	79.1	47.7	71.7	43.3	65.1	33.3	50.0	22.7	34.1
	25	48.5	72.9	44.0	66.1	39.9	60.0	30.6	46.1	20.9	31.5
	26	44.9	67.4	40.6	61.1	36.9	55.5	28.3	42.6	19.4	29.1
	27	41.6	62.5	37.7	56.7	34.2	51.4	26.3	39.5	18.0	27.0
	28	38.7	58.1	35.0	52.7	31.8	47.8	24.4	36.7	16.7	25.1
	29	36.1	54.2	32.7	49.1	29.7	44.6	22.8	34.2	15.6	23.4
	30	33.7	50.6	30.5	45.9	27.7	41.7	21.3	32.0	14.5	21.9
	32	29.6	44.5	26.8	40.3	24.4	36.6	18.7	28.1	12.8	19.2
	34	26.2	39.4	23.8	35.7	21.6	32.4	16.6	24.9	11.3	17.0
	36	23.4	35.2	21.2	31.9	19.3	28.9	14.8	22.2	10.1	15.2
	38							13.3	19.9	9.06	13.6
Properties											
A_g, in.^{2}		5.79		5.20		4.68		3.53		2.37	
I, in.^{4}		29.1		26.4		23.9		18.4		12.6	
r, in.		2.24		2.25		2.26		2.28		2.30	
ASD		LRFD		Note: Heavy line indicates KL/r equal to or greater than 200.							
Ω_c = 1.67		ϕ_c = 0.90									

Table 4-5 (continued)

Available Strength in Axial Compression, kips

Round HSS

F_y = 42 ksi

HSS6

Shape		HSS6×											
		0.500		0.375		0.312		0.280		0.250		0.188	
t_{design}, in.		0.465		0.349		0.291		0.260		0.233		0.174	
lb/ft		29.4		22.6		19.0		17.1		15.4		11.7	
Design		P_n/Ω_c	$\phi_c P_n$	P_n/Ω_c	$\phi_c P_n$	P_n/Ω_c	$\phi_c P_n$	P_n/Ω_c	$\phi_c P_n$	P_n/Ω_c	$\phi_c P_n$	P_n/Ω_c	$\phi_c P_n$
		ASD	LRFD	ASD	LRFD	ASD	LRFD	ASD	LRFD	ASD	LRFD	ASD	LRFD
Effective length, KL (ft), with respect to least radius of gyration, r	0	203	306	156	234	131	197	118	177	106	160	80.0	120
	1	203	305	156	234	131	197	118	177	106	159	79.8	120
	2	202	303	155	232	130	196	117	176	105	158	79.3	119
	3	199	300	153	230	129	194	116	174	104	156	78.5	118
	4	196	295	151	226	127	191	114	171	103	154	77.4	116
	5	192	289	148	222	124	187	112	168	101	151	75.9	114
	6	187	281	144	216	121	183	109	164	98.3	148	74.2	112
	7	182	273	140	210	118	177	106	160	95.6	144	72.2	109
	8	176	264	135	203	114	172	103	155	92.6	139	70.0	105
	9	169	254	130	196	110	166	99.1	149	89.3	134	67.6	102
	10	162	243	125	188	106	159	95.2	143	85.8	129	64.9	97.6
	11	154	231	119	179	101	152	91.0	137	82.1	123	62.1	93.4
	12	146	220	113	170	96.1	144	86.6	130	78.2	117	59.2	89.0
	13	138	207	107	161	91.0	137	82.1	123	74.1	111	56.2	84.5
	14	130	195	101	152	85.8	129	77.4	116	70.0	105	53.2	79.9
	15	121	182	94.8	143	80.6	121	72.8	109	65.8	98.9	50.0	75.2
	16	113	170	88.5	133	75.4	113	68.1	102	61.6	92.6	46.9	70.5
	17	105	157	82.3	124	70.2	105	63.4	95.3	57.4	86.3	43.8	65.8
	18	96.5	145	76.2	114	65.0	97.8	58.8	88.4	53.3	80.1	40.7	61.2
	19	88.6	133	70.2	105	60.0	90.2	54.4	81.7	49.3	74.1	37.7	56.6
	20	81.0	122	64.4	96.8	55.2	82.9	50.0	75.1	45.4	68.2	34.7	52.2
	21	73.6	111	58.7	88.2	50.4	75.8	45.7	68.8	41.6	62.5	31.9	47.9
	22	67.0	101	53.5	80.4	45.9	69.0	41.7	62.6	37.9	56.9	29.1	43.7
	23	61.3	92.2	48.9	73.5	42.0	63.2	38.1	57.3	34.7	52.1	26.6	40.0
	24	56.3	84.6	44.9	67.5	38.6	58.0	35.0	52.6	31.8	47.8	24.5	36.8
	25	51.9	78.0	41.4	62.3	35.6	53.5	32.3	48.5	29.3	44.1	22.5	33.9
	26	48.0	72.1	38.3	57.6	32.9	49.4	29.8	44.9	27.1	40.8	20.8	31.3
	28	41.4	62.2	33.0	49.6	28.4	42.6	25.7	38.7	23.4	35.1	18.0	27.0
	30	36.0	54.2	28.8	43.2	24.7	37.1	22.4	33.7	20.4	30.6	15.7	23.5
	32	31.7	47.6	25.3	38.0	21.7	32.6	19.7	29.6	17.9	26.9	13.8	20.7
	34									15.9	23.8	12.2	18.3
Properties													
A_g, in.^{2}		8.09		6.20		5.22		4.69		4.22		3.18	
I, in.^{4}		31.2		24.8		21.3		19.3		17.6		13.5	
r, in.		1.96		2.00		2.02		2.03		2.04		2.06	

ASD	LRFD
Ω_c = 1.67	ϕ_c = 0.90

Note: Heavy line indicates KL/r equal to or greater than 200.

HSS6-HSS5.563

Table 4-5 (continued)
Available Strength in Axial Compression, kips
Round HSS

F_y = 42 ksi

Shape		HSS6×		HSS5.563×									
		0.125		0.500		0.375		0.258		0.188		0.134	
t_{design}, in.		0.116		0.465		0.349		0.240		0.174		0.124	
lb/ft		7.85		27.1		20.8		14.6		10.8		7.78	
Design		P_n/Ω_c	$\phi_c P_n$	P_n/Ω_c	$\phi_c P_n$	P_n/Ω_c	$\phi_c P_n$	P_n/Ω_c	$\phi_c P_n$	P_n/Ω_c	$\phi_c P_n$	P_n/Ω_c	$\phi_c P_n$
		ASD	LRFD	ASD	LRFD	ASD	LRFD	ASD	LRFD	ASD	LRFD	ASD	LRFD
Effective length, KL (ft), with respect to least radius of gyration, r	0	53.8	80.9	187	282	144	216	101	152	74.2	112	53.3	80.1
	1	53.7	80.7	187	281	143	216	101	151	74.0	111	53.2	79.9
	2	53.4	80.2	185	279	142	214	99.8	150	73.5	110	52.8	79.4
	3	52.8	79.4	183	275	141	211	98.6	148	72.6	109	52.2	78.4
	4	52.1	78.3	179	270	138	207	96.9	146	71.4	107	51.3	77.1
	5	51.1	76.9	175	263	135	203	94.7	142	69.8	105	50.2	75.5
	6	50.0	75.2	170	256	131	197	92.2	139	68.0	102	48.9	73.5
	7	48.7	73.2	164	247	127	191	89.2	134	65.9	99.0	47.4	71.2
	8	47.2	71.0	158	237	122	183	85.9	129	63.5	95.5	45.7	68.7
	9	45.6	68.5	151	226	117	175	82.3	124	61.0	91.6	43.9	66.0
	10	43.9	65.9	143	215	111	167	78.5	118	58.2	87.5	41.9	63.0
	11	42.0	63.2	135	203	105	158	74.5	112	55.3	83.2	39.9	59.9
	12	40.1	60.3	127	191	99.2	149	70.3	106	52.3	78.7	37.7	56.7
	13	38.1	57.3	119	178	93.0	140	66.1	99.3	49.3	74.0	35.5	53.4
	14	36.1	54.2	110	166	86.7	130	61.8	92.8	46.1	69.3	33.3	50.1
	15	34.0	51.1	102	153	80.4	121	57.4	86.3	43.0	64.6	31.1	46.7
	16	31.9	47.9	93.9	141	74.2	112	53.1	79.9	39.9	59.9	28.8	43.4
	17	29.8	44.8	85.9	129	68.2	102	48.9	73.5	36.8	55.3	26.7	40.1
	18	27.8	41.7	78.1	117	62.3	93.6	44.8	67.4	33.8	50.8	24.5	36.8
	19	25.7	38.7	70.6	106	56.6	85.1	40.9	61.4	30.9	46.5	22.4	33.7
	20	23.8	35.7	63.7	95.7	51.1	76.8	37.0	55.6	28.1	42.2	20.4	30.7
	21	21.8	32.8	57.8	86.8	46.3	69.6	33.5	50.4	25.5	38.3	18.5	27.8
	22	20.0	30.0	52.6	79.1	42.2	63.5	30.6	45.9	23.2	34.9	16.9	25.3
	23	18.3	27.5	48.2	72.4	38.6	58.1	28.0	42.0	21.2	31.9	15.4	23.2
	24	16.8	25.2	44.2	66.5	35.5	53.3	25.7	38.6	19.5	29.3	14.2	21.3
	25	15.5	23.2	40.8	61.3	32.7	49.1	23.7	35.6	18.0	27.0	13.1	19.6
	26	14.3	21.5	37.7	56.6	30.2	45.4	21.9	32.9	16.6	25.0	12.1	18.1
	28	12.3	18.5	32.5	48.8	26.1	39.2	18.9	28.4	14.3	21.5	10.4	15.6
	30	10.7	16.1	28.3	42.5	22.7	34.1	16.4	24.7	12.5	18.8	9.06	13.6
	32	9.44	14.2									7.97	12.0
	34	8.36	12.6										

Properties						
A_g, in.^{2}	2.14	7.45	5.72	4.01	2.95	2.12
I, in.^{4}	9.28	24.4	19.5	14.2	10.7	7.84
r, in.	2.08	1.81	1.85	1.88	1.91	1.92

ASD	LRFD
Ω_c = 1.67	ϕ_c = 0.90

Note: Heavy line indicates KL/r equal to or greater than 200.

F_y = 42 ksi

Table 4-5 (continued)
Available Strength in Axial Compression, kips
Round HSS

HSS5.500-HSS5

Shape		HSS5.500×						HSS5×					
		0.500		0.375		0.258		0.500		0.375		0.312	
t_{design}, in.		0.465		0.349		0.240		0.465		0.349		0.291	
lb/ft		26.7		20.6		14.5		24.1		18.5		15.6	
Design		P_n/Ω_c ASD	$\phi_c P_n$ LRFD	P_n/Ω_c ASD	$\phi_c P_n$ LRFD	P_n/Ω_c ASD	$\phi_c P_n$ LRFD	P_n/Ω_c ASD	$\phi_c P_n$ LRFD	P_n/Ω_c ASD	$\phi_c P_n$ LRFD	P_n/Ω_c ASD	$\phi_c P_n$ LRFD
Effective length, KL (ft), with respect to least radius of gyration, r	0	185	278	142	214	99.8	150	166	250	128	193	108	163
	1	185	277	142	213	99.6	150	166	249	128	192	108	162
	2	183	275	141	211	98.8	149	164	247	127	190	107	160
	3	181	271	139	209	97.6	147	161	243	125	187	105	158
	4	177	266	136	205	95.8	144	158	237	122	183	103	154
	5	173	260	133	200	93.7	141	153	230	118	178	99.9	150
	6	168	252	129	194	91.1	137	147	221	114	172	96.5	145
	7	162	243	125	188	88.1	132	141	212	109	164	92.6	139
	8	155	233	120	180	84.8	127	134	201	104	157	88.3	133
	9	148	222	115	172	81.2	122	126	190	98.6	148	83.6	126
	10	140	211	109	164	77.3	116	118	178	92.7	139	78.8	118
	11	133	199	103	155	73.3	110	110	166	86.6	130	73.7	111
	12	124	187	97.1	146	69.1	104	102	153	80.3	121	68.5	103
	13	116	174	90.9	137	64.8	97.4	93.5	141	74.1	111	63.3	95.1
	14	108	162	84.7	127	60.5	90.9	85.3	128	67.9	102	58.1	87.3
	15	99.5	150	78.4	118	56.2	84.4	77.3	116	61.8	92.8	53.0	79.6
	16	91.3	137	72.3	109	51.9	78.0	69.5	104	55.8	83.9	48.0	72.2
	17	83.4	125	66.2	99.6	47.7	71.7	62.0	93.2	50.2	75.4	43.2	65.0
	18	75.7	114	60.4	90.8	43.6	65.6	55.3	83.1	44.7	67.2	38.6	58.1
	19	68.2	102	54.7	82.2	39.7	59.6	49.6	74.6	40.1	60.3	34.7	52.1
	20	61.5	92.5	49.4	74.2	35.8	53.9	44.8	67.3	36.2	54.5	31.3	47.0
	21	55.8	83.9	44.8	67.3	32.5	48.9	40.6	61.0	32.9	49.4	28.4	42.7
	22	50.9	76.4	40.8	61.3	29.6	44.5	37.0	55.6	29.9	45.0	25.9	38.9
	23	46.5	69.9	37.3	56.1	27.1	40.7	33.9	50.9	27.4	41.2	23.7	35.6
	24	42.7	64.2	34.3	51.5	24.9	37.4	31.1	46.7	25.2	37.8	21.7	32.7
	25	39.4	59.2	31.6	47.5	22.9	34.5	28.7	43.1	23.2	34.9	20.0	30.1
	26	36.4	54.7	29.2	43.9	21.2	31.9	26.5	39.8	21.4	32.2	18.5	27.8
	28	31.4	47.2	25.2	37.9	18.3	27.5						
	30			21.9	33.0	15.9	23.9						
Properties													
A_g, in.^{2}		7.36		5.65		3.97		6.62		5.10		4.30	
I, in.^{4}		23.5		18.8		13.7		17.2		13.9		12.0	
r, in.		1.79		1.83		1.86		1.61		1.65		1.67	

ASD	LRFD
Ω_c = 1.67	ϕ_c = 0.90

Note: Heavy line indicates KL/r equal to or greater than 200.

Table 4-5 (continued)
Available Strength in Axial Compression, kips
Round HSS

F_y = 42 ksi

HSS5-HSS4.500

Shape		HSS5×								HSS4.500×			
		0.258		0.250		0.188		0.125		0.375		0.337	
t_{design}, in.		0.240		0.233		0.174		0.116		0.349		0.313	
lb/ft		13.1		12.7		9.67		6.51		16.5		15.0	
Design		P_n/Ω_c ASD	$\phi_c P_n$ LRFD	P_n/Ω_c ASD	$\phi_c P_n$ LRFD	P_n/Ω_c ASD	$\phi_c P_n$ LRFD	P_n/Ω_c ASD	$\phi_c P_n$ LRFD	P_n/Ω_c ASD	$\phi_c P_n$ LRFD	P_n/Ω_c ASD	$\phi_c P_n$ LRFD
Effective length, KL (ft), with respect to least radius of gyration, r	0	90.3	136	87.8	132	66.4	99.8	44.8	67.3	114	172	104	156
	1	90.0	135	87.5	132	66.2	99.5	44.6	67.1	114	171	103	155
	2	89.2	134	86.7	130	65.6	98.6	44.2	66.5	113	169	102	153
	3	87.8	132	85.4	128	64.6	97.1	43.6	65.5	110	166	99.9	150
	4	85.9	129	83.5	126	63.3	95.1	42.7	64.2	107	161	97.1	146
	5	83.6	126	81.2	122	61.6	92.5	41.6	62.5	103	155	93.7	141
	6	80.8	121	78.5	118	59.5	89.5	40.2	60.5	98.8	148	89.6	135
	7	77.6	117	75.4	113	57.2	86.0	38.7	58.2	93.6	141	85.0	128
	8	74.1	111	72.0	108	54.7	82.2	37.1	55.7	88.1	132	80.0	120
	9	70.3	106	68.3	103	52.0	78.1	35.2	53.0	82.1	123	74.7	112
	10	66.2	99.6	64.4	96.8	49.1	73.7	33.3	50.1	76.0	114	69.2	104
	11	62.1	93.3	60.3	90.7	46.0	69.2	31.3	47.1	69.7	105	63.6	95.5
	12	57.8	86.9	56.2	84.5	43.0	64.6	29.3	44.0	63.5	95.4	57.9	87.1
	13	53.5	80.4	52.0	78.2	39.8	59.9	27.2	40.8	57.3	86.1	52.4	78.7
	14	49.2	74.0	47.8	71.9	36.7	55.2	25.1	37.7	51.3	77.1	47.0	70.6
	15	45.0	67.6	43.7	65.7	33.6	50.5	23.0	34.6	45.6	68.5	41.8	62.8
	16	40.9	61.4	39.7	59.7	30.6	46.0	21.0	31.6	40.1	60.3	36.8	55.3
	17	36.9	55.5	35.9	53.9	27.7	41.6	19.1	28.6	35.5	53.4	32.6	49.0
	18	33.0	49.6	32.1	48.3	24.9	37.4	17.2	25.8	31.7	47.6	29.1	43.7
	19	29.6	44.6	28.8	43.3	22.3	33.5	15.4	23.2	28.4	42.7	26.1	39.2
	20	26.8	40.2	26.0	39.1	20.1	30.3	13.9	20.9	25.7	38.6	23.5	35.4
	21	24.3	36.5	23.6	35.5	18.3	27.5	12.6	19.0	23.3	35.0	21.4	32.1
	22	22.1	33.2	21.5	32.3	16.6	25.0	11.5	17.3	21.2	31.9	19.5	29.3
	23	20.2	30.4	19.7	29.6	15.2	22.9	10.5	15.8	19.4	29.2	17.8	26.8
	24	18.6	27.9	18.1	27.1	14.0	21.0	9.65	14.5	17.8	26.8	16.4	24.6
	25	17.1	25.7	16.6	25.0	12.9	19.4	8.90	13.4				
	26	15.8	23.8	15.4	23.1	11.9	17.9	8.23	12.4				
	28	13.7	20.5	13.3	19.9	10.3	15.4	7.09	10.7				
Properties													
A_g, in.^{2}		3.59		3.49		2.64		1.78		4.55		4.12	
I, in.^{4}		10.2		9.94		7.69		5.31		9.87		9.07	
r, in.		1.69		1.69		1.71		1.73		1.47		1.48	
ASD	LRFD	Note: Heavy line indicates KL/r equal to or greater than 200.											
Ω_c = 1.67	ϕ_c = 0.90												

Table 4-5 (continued)
Available Strength in Axial Compression, kips
Round HSS

F_y = 42 ksi

HSS4.500-HSS4

Shape		HSS4.500×						HSS4×			
		0.237		0.188		0.125		0.313		0.250	
t_{design}, in.		0.220		0.174		0.116		0.291		0.233	
lb/ft		10.8		8.67		5.85		12.3		10.0	
Design		P_n/Ω_c ASD	$\phi_c P_n$ LRFD	P_n/Ω_c ASD	$\phi_c P_n$ LRFD	P_n/Ω_c ASD	$\phi_c P_n$ LRFD	P_n/Ω_c ASD	$\phi_c P_n$ LRFD	P_n/Ω_c ASD	$\phi_c P_n$ LRFD
Effective length, KL (ft), with respect to least radius of gyration, r	0	74.4	112	59.4	89.2	40.2	60.5	85.3	128	69.4	104
	1	74.2	111	59.1	88.9	40.1	60.3	84.8	127	69.1	104
	2	73.3	110	58.5	87.9	39.7	59.6	83.5	126	68.0	102
	3	71.9	108	57.4	86.2	38.9	58.5	81.4	122	66.4	99.7
	4	70.0	105	55.9	84.0	37.9	57.0	78.6	118	64.1	96.3
	5	67.6	102	54.0	81.2	36.7	55.2	75.1	113	61.3	92.1
	6	64.9	97.5	51.8	77.9	35.2	53.0	71.0	107	58.0	87.1
	7	61.7	92.8	49.3	74.1	33.6	50.5	66.5	99.9	54.3	81.7
	8	58.3	87.6	46.6	70.0	31.8	47.8	61.6	92.6	50.4	75.8
	9	54.6	82.1	43.7	65.7	29.9	44.9	56.5	84.9	46.3	69.6
	10	50.8	76.3	40.7	61.1	27.8	41.9	51.3	77.1	42.1	63.3
	11	46.8	70.4	37.6	56.5	25.8	38.7	46.1	69.3	37.9	57.0
	12	42.9	64.5	34.4	51.8	23.7	35.6	41.0	61.7	33.8	50.8
	13	39.0	58.6	31.3	47.1	21.6	32.5	36.2	54.3	29.8	44.8
	14	35.2	52.8	28.3	42.5	19.6	29.4	31.5	47.3	26.0	39.1
	15	31.5	47.3	25.4	38.1	17.6	26.4	27.4	41.2	22.6	34.0
	16	27.9	41.9	22.5	33.9	15.7	23.6	24.1	36.2	19.9	29.9
	17	24.7	37.1	20.0	30.0	13.9	20.9	21.3	32.1	17.6	26.5
	18	22.0	33.1	17.8	26.8	12.4	18.6	19.0	28.6	15.7	23.6
	19	19.8	29.7	16.0	24.0	11.1	16.7	17.1	25.7	14.1	21.2
	20	17.8	26.8	14.4	21.7	10.0	15.1	15.4	23.2	12.7	19.1
	21	16.2	24.3	13.1	19.7	9.10	13.7	14.0	21.0	11.6	17.4
	22	14.7	22.2	11.9	17.9	8.29	12.5	12.7	19.1	10.5	15.8
	23	13.5	20.3	10.9	16.4	7.58	11.4				
	24	12.4	18.6	10.0	15.0	6.97	10.5				
	25	11.4	17.2	9.23	13.9	6.42	9.65				
Properties											
A_g, in.^{2}		2.96		2.36		1.60		3.39		2.76	
I, in.^{4}		6.79		5.54		3.84		5.87		4.91	
r, in.		1.52		1.53		1.55		1.32		1.33	
ASD	LRFD	Note: Heavy line indicates KL/r equal to or greater than 200.									
Ω_c = 1.67	ϕ_c = 0.90										

HSS4

Table 4-5 (continued)
Available Strength in Axial Compression, kips
Round HSS

F_y = 42 ksi

Shape		HSS4×									
		0.237		0.226		0.220		0.188		0.125	
t_{design}, in.		0.220		0.210		0.205		0.174		0.116	
lb/ft		9.53		9.12		8.89		7.66		5.18	
Design		P_n/Ω_c	$\phi_c P_n$	P_n/Ω_c	$\phi_c P_n$	P_n/Ω_c	$\phi_c P_n$	P_n/Ω_c	$\phi_c P_n$	P_n/Ω_c	$\phi_c P_n$
		ASD	LRFD	ASD	LRFD	ASD	LRFD	ASD	LRFD	ASD	LRFD
Effective length, KL (ft), with respect to least radius of gyration, r	0	65.6	98.7	62.9	94.5	61.4	92.2	52.6	79.0	35.7	53.7
	1	65.3	98.2	62.6	94.0	61.1	91.8	52.3	78.6	35.5	53.4
	2	64.4	96.7	61.6	92.7	60.2	90.4	51.6	77.5	35.0	52.7
	3	62.8	94.4	60.1	90.4	58.7	88.2	50.3	75.6	34.2	51.4
	4	60.7	91.2	58.1	87.3	56.7	85.2	48.6	73.1	33.1	49.8
	5	58.0	87.2	55.6	83.5	54.3	81.5	46.6	70.0	31.7	47.7
	6	55.0	82.6	52.7	79.1	51.4	77.2	44.1	66.3	30.1	45.3
	7	51.6	77.5	49.4	74.2	48.2	72.5	41.4	62.3	28.3	42.6
	8	47.9	72.0	45.9	68.9	44.8	67.3	38.5	57.9	26.4	39.7
	9	44.0	66.2	42.2	63.4	41.2	61.9	35.5	53.3	24.4	36.6
	10	40.1	60.3	38.4	57.7	37.5	56.4	32.4	48.6	22.3	33.5
	11	36.2	54.4	34.6	52.1	33.8	50.8	29.2	43.9	20.2	30.3
	12	32.3	48.5	30.9	46.5	30.2	45.4	26.1	39.3	18.1	27.2
	13	28.6	42.9	27.4	41.1	26.7	40.1	23.1	34.8	16.1	24.2
	14	25.0	37.5	23.9	35.9	23.3	35.1	20.3	30.5	14.2	21.3
	15	21.7	32.7	20.8	31.3	20.3	30.5	17.7	26.6	12.4	18.6
	16	19.1	28.7	18.3	27.5	17.9	26.8	15.5	23.3	10.9	16.3
	17	16.9	25.4	16.2	24.4	15.8	23.8	13.8	20.7	9.63	14.5
	18	15.1	22.7	14.5	21.7	14.1	21.2	12.3	18.4	8.59	12.9
	19	13.6	20.4	13.0	19.5	12.7	19.0	11.0	16.6	7.71	11.6
	20	12.2	18.4	11.7	17.6	11.4	17.2	9.94	14.9	6.95	10.5
	21	11.1	16.7	10.6	16.0	10.4	15.6	9.02	13.6	6.31	9.48
	22	10.1	15.2	9.68	14.6	9.45	14.2	8.21	12.3	5.75	8.64
Properties											
A_g, in.^{2}		2.61		2.50		2.44		2.09		1.42	
I, in.^{4}		4.68		4.50		4.41		3.83		2.67	
r, in.		1.34		1.34		1.34		1.35		1.37	
ASD		LRFD		Note: Heavy line indicates KL/r equal to or greater than 200.							
Ω_c = 1.67		ϕ_c = 0.90									

Table 4-6
Available Strength in Axial Compression, kips

F_y = 35 ksi

Pipe

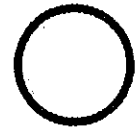

PIPE 12-PIPE 8

Shape		Pipe 12				Pipe 10				Pipe 8			
		XS		Std		XS		Std		XXS		XS	
t_{design}, in.		0.465		0.349		0.465		0.340		0.816		0.465	
lb/ft		65.5		49.6		54.8		40.5		72.5		43.4	
Design		P_n/Ω_c	$\phi_c P_n$	P_n/Ω_c	$\phi_c P_n$	P_n/Ω_c	$\phi_c P_n$	P_n/Ω_c	$\phi_c P_n$	P_n/Ω_c	$\phi_c P_n$	P_n/Ω_c	$\phi_c P_n$
		ASD	LRFD	ASD	LRFD	ASD	LRFD	ASD	LRFD	ASD	LRFD	ASD	LRFD
Effective length, KL (ft), with respect to least radius of gyration, r	0	367	551	287	432	316	476	241	362	419	630	249	375
	6	362	544	283	426	310	466	236	355	405	609	242	363
	7	360	541	282	424	308	463	235	353	400	601	239	359
	8	358	538	280	421	305	459	233	350	394	593	236	354
	9	355	534	278	418	303	455	231	347	388	583	232	349
	10	353	530	276	415	299	450	228	343	381	573	228	343
	11	350	526	274	412	296	445	226	339	373	561	224	337
	12	347	521	272	408	292	439	223	335	365	549	220	330
	13	343	516	269	405	288	433	220	330	357	536	215	323
	14	340	511	266	400	284	427	217	326	348	523	210	315
	15	336	505	263	396	279	420	213	320	338	508	204	307
	16	332	499	260	391	274	413	210	315	328	494	199	299
	17	328	493	257	386	269	405	206	310	318	478	193	290
	18	323	486	254	381	264	397	202	304	308	463	187	282
	19	319	479	250	376	259	389	198	298	297	447	181	273
	20	314	472	246	370	253	381	194	291	286	430	175	263
	21	309	464	243	365	248	372	190	285	275	414	169	254
	22	304	457	239	359	242	363	185	278	264	397	163	245
	23	298	449	235	353	236	354	181	272	253	380	156	235
	24	293	440	230	346	230	345	176	265	242	364	150	225
	25	288	432	226	340	224	336	172	258	231	347	144	216
	26	282	424	222	333	217	327	167	251	220	331	137	206
	27	276	415	217	327	211	317	162	244	209	314	131	197
	28	270	406	213	320	205	308	157	236	198	298	125	188
	29	264	397	208	313	198	298	153	229	188	283	119	178
	30	258	388	204	306	192	288	148	222	178	267	113	169
	32	246	370	194	292	179	269	138	207	158	237	101	152
	34	234	351	185	277	166	250	128	193	140	210	89.7	135
	36	221	333	175	263	154	231	119	179	124	187	80.0	120
	38	209	314	165	248	142	213	110	165	112	168	71.8	108
	40	197	296	156	234	130	195	101	152	101	152	64.8	97.5
Properties													
A_g, in.^{2}		17.5		13.7		15.1		11.5		20.0		11.9	
I, in.^{4}		339		262		199		151		154		100	
r, in.		4.35		4.39		3.64		3.68		2.78		2.89	

ASD	LRFD
Ω_c = 1.67	ϕ_c = 0.90

PIPE 8-PIPE 5

Table 4-6 (continued)
Available Strength in Axial Compression, kips

F_y = 35 ksi

Pipe

Shape		Pipe 8		Pipe 6						Pipe 5	
		Std		XXS		XS		Std		XXS	
t_{design}, in.		0.300		0.805		0.403		0.261		0.699	
lb/ft		28.6		53.2		28.6		19.0		38.6	
		P_n/Ω_c	$\phi_c P_n$	P_n/Ω_c	$\phi_c P_n$	P_n/Ω_c	$\phi_c P_n$	P_n/Ω_c	$\phi_c P_n$	P_n/Ω_c	$\phi_c P_n$
Design		ASD	LRFD	ASD	LRFD	ASD	LRFD	ASD	LRFD	ASD	LRFD
Effective length, KL (ft), with respect to least radius of gyration, r	0	165	247	308	463	164	247	109	164	224	337
	6	160	240	290	436	155	233	103	155	205	309
	7	158	237	283	426	152	229	101	153	199	299
	8	156	234	276	415	149	224	99.3	149	192	288
	9	154	231	268	403	145	218	96.9	146	184	277
	10	151	227	260	391	141	212	94.2	142	176	264
	11	148	223	251	377	136	205	91.4	137	167	251
	12	146	219	241	362	132	198	88.4	133	158	237
	13	143	214	231	347	127	191	85.2	128	149	223
	14	139	209	221	332	122	183	81.9	123	139	209
	15	136	204	210	316	116	175	78.5	118	130	195
	16	132	199	199	299	111	167	75.1	113	120	181
	17	129	194	188	283	106	159	71.6	108	111	167
	18	125	188	177	267	100	151	68.0	102	102	153
	19	121	182	167	250	94.7	142	64.4	96.8	93.1	140
	20	117	176	156	234	89.2	134	60.9	91.5	84.5	127
	21	113	170	145	218	83.8	126	57.3	86.2	76.7	115
	22	109	164	135	203	78.5	118	53.9	81.0	69.9	105
	23	105	158	125	188	73.3	110	50.5	75.8	63.9	96.1
	24	101	152	115	173	68.3	103	47.1	70.8	58.7	88.2
	25	96.9	146	106	160	63.3	95.1	43.9	65.9	54.1	81.3
	26	92.8	139	98.2	148	58.5	88.0	40.6	61.1	50.0	75.2
	27	88.7	133	91.1	137	54.3	81.6	37.7	56.7	46.4	69.7
	28	84.7	127	84.7	127	50.5	75.8	35.0	52.7	43.1	64.8
	29	80.7	121	78.9	119	47.0	70.7	32.7	49.1	40.2	60.4
	30	76.8	115	73.8	111	44.0	66.1	30.5	45.9		
	32	69.1	104	64.8	97.4	38.6	58.1	26.8	40.3		
	34	61.7	92.7	57.4	86.3	34.2	51.4	23.8	35.7		
	36	55.0	82.7			30.5	45.9	21.2	31.9		
	38	49.4	74.2								
	40	44.6	67.0								
Properties											
A_g, in.^{2}		7.85		14.7		7.83		5.20		10.7	
I, in.^{4}		68.1		63.5		38.3		26.5		32.2	
r, in.		2.95		2.08		2.20		2.25		1.74	
ASD		LRFD		Note: Heavy line indicates KL/r equal to or greater than 200.							
Ω_c = 1.67		ϕ_c = 0.90									

Table 4-6 (continued)

Available Strength in Axial Compression, kips

F_y = 35 ksi

Pipe

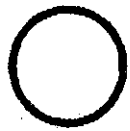

PIPE 5-PIPE 4

Shape		Pipe 5				Pipe 4					
		XS		Std		XXS		XS		Std	
t_{design}, in.		0.349		0.241		0.628		0.315		0.221	
lb/ft		20.8		14.6		27.6		15.0		10.8	
Design		P_n/Ω_c	$\phi_c P_n$	P_n/Ω_c	$\phi_c P_n$	P_n/Ω_c	$\phi_c P_n$	P_n/Ω_c	$\phi_c P_n$	P_n/Ω_c	$\phi_c P_n$
		ASD	LRFD	ASD	LRFD	ASD	LRFD	ASD	LRFD	ASD	LRFD
Effective length, KL (ft), with respect to least radius of gyration, r	0	120	180	84.0	126	161	241	86.8	130	62.0	93.2
	6	111	167	78.0	117	140	210	76.9	116	55.2	83.0
	7	108	162	75.9	114	133	200	73.6	111	52.9	79.6
	8	105	157	73.5	111	126	189	70.0	105	50.4	75.8
	9	101	152	71.0	107	118	177	66.1	99.3	47.7	71.8
	10	96.8	146	68.2	103	110	165	62.0	93.1	44.9	67.5
	11	92.5	139	65.3	98.1	101	152	57.7	86.8	42.0	63.1
	12	88.1	132	62.2	93.6	92.7	139	53.4	80.3	38.9	58.5
	13	83.5	125	59.1	88.8	84.3	127	49.1	73.8	35.9	54.0
	14	78.7	118	55.8	83.9	76.0	114	44.9	67.4	32.9	49.5
	15	74.0	111	52.6	79.0	68.1	102	40.7	61.2	30.0	45.1
	16	69.2	104	49.3	74.1	60.3	90.7	36.7	55.1	27.1	40.8
	17	64.4	96.9	46.0	69.1	53.5	80.3	32.8	49.2	24.4	36.6
	18	59.8	89.8	42.8	64.3	47.7	71.7	29.2	43.9	21.7	32.7
	19	55.2	83.0	39.6	59.5	42.8	64.3	26.2	39.4	19.5	29.3
	20	50.7	76.3	36.5	54.9	38.6	58.0	23.7	35.6	17.6	26.5
	21	46.4	69.8	33.5	50.4	35.0	52.6	21.5	32.3	16.0	24.0
	22	42.3	63.6	30.6	45.9	31.9	48.0	19.6	29.4	14.6	21.9
	23	38.7	58.2	28.0	42.0	29.2	43.9	17.9	26.9	13.3	20.0
	24	35.5	53.4	25.7	38.6			16.4	24.7	12.2	18.4
	25	32.8	49.2	23.7	35.6					11.3	16.9
	26	30.3	45.5	21.9	32.9						
	27	28.1	42.2	20.3	30.5						
	28	26.1	39.2	18.9	28.4						
	29	24.3	36.6	17.6	26.4						
	30	22.7	34.2	16.4	24.7						
Properties											
A_g, in.^{2}		5.73		4.01		7.66		4.14		2.96	
I, in.^{4}		19.5		14.3		14.7		9.12		6.82	
r, in.		1.85		1.88		1.39		1.48		1.51	
ASD		LRFD		Note: Heavy line indicates KL/r equal to or greater than 200.							
Ω_c = 1.67		ϕ_c = 0.90									

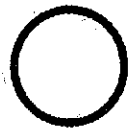

Table 4-6 (continued)
Available Strength in Axial Compression, kips

F_y = 35 ksi

PIPE 3½-PIPE 3

Pipe

Shape		Pipe 3½				Pipe 3					
		XS		Std		XXS		XS		Std	
t_{design}, in.		0.296		0.211		0.559		0.280		0.201	
lb/ft		12.5		9.12		18.6		10.3		7.58	
Design		P_n/Ω_c	$\phi_c P_n$	P_n/Ω_c	$\phi_c P_n$	P_n/Ω_c	$\phi_c P_n$	P_n/Ω_c	$\phi_c P_n$	P_n/Ω_c	$\phi_c P_n$
		ASD	LRFD	ASD	LRFD	ASD	LRFD	ASD	LRFD	ASD	LRFD
Effective length, KL (ft), with respect to least radius of gyration, r	0	71.9	108	52.4	78.7	108	163	59.3	89.1	43.4	65.2
	6	61.6	92.6	45.2	67.9	85.6	129	48.4	72.7	35.7	53.7
	7	58.2	87.5	42.8	64.4	78.6	118	44.9	67.5	33.3	50.1
	8	54.6	82.1	40.3	60.6	71.2	107	41.3	62.0	30.7	46.2
	9	50.8	76.3	37.6	56.5	63.7	95.7	37.5	56.3	28.0	42.2
	10	46.8	70.3	34.8	52.2	56.2	84.5	33.6	50.6	25.8	38.1
	11	42.8	64.3	31.9	47.9	49.0	73.6	29.9	44.9	22.6	34.0
	12	38.7	58.2	29.0	43.6	42.1	63.3	26.2	39.4	20.0	30.0
	13	34.8	52.3	26.2	39.4	35.9	53.9	22.7	34.1	17.5	26.2
	14	31.0	46.6	23.4	35.2	30.9	46.5	19.6	29.4	15.1	22.7
	15	27.3	41.0	20.8	31.3	26.9	40.5	17.1	25.6	13.1	19.8
	16	24.0	36.1	18.3	27.5	23.7	35.6	15.0	22.5	11.6	17.4
	17	21.3	32.0	16.2	24.4	21.0	31.5	13.3	20.0	10.2	15.4
	18	19.0	28.5	14.5	21.7			11.8	17.8	9.13	13.7
	19	17.0	25.6	13.0	19.5			10.6	16.0	8.19	12.3
	20	15.4	23.1	11.7	17.6						
	21	13.9	20.9	10.6	16.0						
	22			9.68	14.6						

Properties					
A_g, in.^{2}	3.43	2.50	5.17	2.83	2.07
I, in.^{4}	5.94	4.52	5.79	3.70	2.85
r, in.	1.31	1.34	1.06	1.14	1.17

ASD	LRFD	Note: Heavy line indicates KL/r equal to or greater than 200.
Ω_c = 1.67	ϕ_c = 0.90	

Table 4-7
Available Strength in Axial Compression, kips
WT-Shapes

F_y = 50 ksi

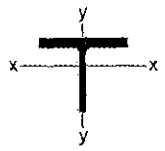

WT18

Shape			WT18×									
lb/ft			151[c]		141[c]		131[c]		123.5[c]		115.5[c]	
Design			P_n/Ω_c ASD	$\phi_c P_n$ LRFD	P_n/Ω_c ASD	$\phi_c P_n$ LRFD	P_n/Ω_c ASD	$\phi_c P_n$ LRFD	P_n/Ω_c ASD	$\phi_c P_n$ LRFD	P_n/Ω_c ASD	$\phi_c P_n$ LRFD
Effective length, KL (ft), with respect to indicated axis	X-X Axis	0	1210	1810	1050	1580	921	1380	813	1220	712	1070
		10	1170	1750	1020	1530	894	1340	791	1190	694	1040
		12	1150	1730	1000	1510	883	1330	781	1170	686	1030
		14	1130	1700	987	1480	870	1310	770	1160	677	1020
		16	1110	1670	969	1460	854	1280	758	1140	667	1000
		18	1080	1630	949	1430	838	1260	744	1120	655	985
		20	1060	1590	927	1390	819	1230	729	1090	643	966
		22	1030	1540	903	1360	799	1200	712	1070	629	945
		24	997	1500	878	1320	778	1170	694	1040	614	924
		26	964	1450	851	1280	756	1140	675	1020	599	900
		28	931	1400	823	1240	732	1100	656	986	583	876
		30	896	1350	794	1190	708	1060	635	955	566	850
		32	860	1290	764	1150	682	1030	614	923	548	824
		34	823	1240	733	1100	657	987	592	890	530	796
		36	786	1180	702	1060	630	947	570	857	511	768
		40	711	1070	639	961	576	866	524	788	473	711
	Y-Y Axis	0	1210	1810	1050	1580	921	1380	813	1220	712	1070
		10	1040	1560	899	1350	778	1170	681	1020	592	889
		12	1020	1540	887	1330	769	1160	674	1010	586	881
		14	1000	1500	870	1310	756	1140	664	998	578	869
		16	970	1460	846	1270	738	1110	650	977	568	853
		18	933	1400	817	1230	715	1070	632	950	554	832
		20	892	1340	784	1180	687	1030	610	917	536	806
		22	847	1270	747	1120	657	987	585	880	516	776
		24	799	1200	708	1060	624	938	558	839	494	742
		26	749	1130	667	1000	589	886	529	795	470	706
		28	699	1050	625	939	554	832	499	750	445	669
		30	649	975	582	875	518	778	468	704	419	630
		32	599	900	540	811	481	723	437	657	393	591
		34	550	826	498	749	445	669	406	611	367	551
		36	502	754	457	687	410	616	376	565	341	512
		40	412	619	379	569	342	514	317	477	290	436
Properties												
A_g, in.^{2}			44.5		41.5		38.5		36.3		34.1	
r_x, in.			5.37		5.36		5.36		5.36		5.36	
r_y, in.			3.82		3.80		3.76		3.74		3.71	
ASD			LRFD		[c] Shape is slender for compression with F_y = 50 ksi.							
Ω_c = 1.67			ϕ_c = 0.90									

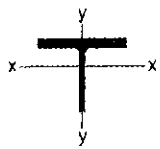

WT18

Table 4-7 (continued)
Available Strength in Axial Compression, kips
WT-Shapes

F_y = 50 ksi

Shape			WT18×									
lb/ft			128[c]		116[c]		105[c]		97[c]		91[c]	
Design			P_n/Ω_c ASD	$\phi_c P_n$ LRFD	P_n/Ω_c ASD	$\phi_c P_n$ LRFD	P_n/Ω_c ASD	$\phi_c P_n$ LRFD	P_n/Ω_c ASD	$\phi_c P_n$ LRFD	P_n/Ω_c ASD	$\phi_c P_n$ LRFD
Effective length, KL (ft), with respect to indicated axis	X-X Axis	0	1040	1560	839	1260	735	1100	599	900	509	765
		10	1000	1510	816	1230	716	1080	585	879	499	749
		12	992	1490	806	1210	707	1060	579	870	494	743
		14	976	1470	795	1190	698	1050	572	860	489	734
		16	959	1440	782	1180	687	1030	564	848	482	725
		18	939	1410	768	1150	675	1010	555	835	476	715
		20	918	1380	752	1130	662	994	545	820	468	703
		22	895	1340	735	1100	647	973	535	804	460	691
		24	870	1310	716	1080	632	949	523	787	451	678
		26	844	1270	697	1050	615	925	511	769	441	663
		28	817	1230	677	1020	598	899	499	749	431	648
		30	789	1190	656	985	580	872	485	729	421	633
		32	760	1140	634	953	562	844	471	708	410	616
		34	730	1100	611	919	543	816	457	687	399	599
		36	700	1050	588	884	523	786	442	665	387	582
		40	638	960	541	814	483	726	412	619	363	546
	Y-Y Axis	0	1040	1560	839	1260	735	1100	599	900	509	765
		10	838	1260	680	1020	575	864	472	709	402	604
		12	797	1200	650	978	552	830	456	685	390	586
		14	747	1120	614	923	523	787	435	655	375	563
		16	690	1040	572	860	490	736	411	617	356	535
		18	630	947	527	792	452	680	383	576	334	503
		20	569	855	480	721	413	620	353	531	311	467
		22	507	762	432	650	372	560	322	485	286	430
		24	447	672	385	579	333	500	291	438	261	393
		26	389	585	340	511	294	442	261	392	236	355
		28	338	508	296	445	257	386	231	347	212	319
		30	296	445	260	391	226	339	203	306	188	283
		32	261	393	230	345	200	300	180	271	167	251
		34	232	349	204	307	178	267	161	242	149	224
		36	208	312	183	275	160	240	144	217	134	201
		40	169	254	149	224	130	196	118	177	109	164
Properties												
A_g, in.^{2}			37.6		34.0		30.9		28.5		26.8	
r_x, in.			5.66		5.63		5.65		5.62		5.62	
r_y, in.			2.65		2.62		2.58		2.56		2.55	
ASD			LRFD		[c] Shape is slender for compression with F_y = 50 ksi.							
Ω_c = 1.67			ϕ_c = 0.90									

Table 4-7 (continued)

Available Strength in Axial Compression, kips

WT-Shapes

F_y = 50 ksi

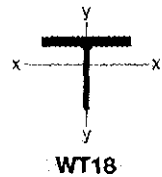

WT18

Shape			WT18×							
lb/ft			85[c]		80[c]		75[c]		67.5[c]	
Design			P_n/Ω_c ASD	$\phi_c P_n$ LRFD	P_n/Ω_c ASD	$\phi_c P_n$ LRFD	P_n/Ω_c ASD	$\phi_c P_n$ LRFD	P_n/Ω_c ASD	$\phi_c P_n$ LRFD
Effective length, KL (ft), with respect to indicated axis	X-X Axis	0	424	637	367	552	324	486	271	407
		10	416	625	361	542	318	478	267	401
		12	412	620	358	538	316	475	265	398
		14	408	614	355	533	313	471	263	395
		16	404	607	351	527	310	466	261	392
		18	398	599	347	521	307	461	258	388
		20	393	590	342	514	303	456	255	383
		22	387	581	337	507	299	449	252	379
		24	380	571	332	499	295	443	248	373
		26	373	560	326	490	290	436	245	368
		28	365	549	320	481	285	428	241	362
		30	357	537	314	471	279	420	237	356
		32	349	525	307	461	274	412	232	349
		34	340	512	300	451	268	403	228	342
		36	331	498	293	440	262	394	223	335
		40	313	470	278	417	249	375	213	320
	Y-Y Axis	0	424	637	367	552	324	486	271	407
		10	335	503	288	432	249	375	197	295
		12	327	491	281	422	244	367	193	290
		14	315	474	272	410	237	357	188	282
		16	302	453	262	393	229	344	181	272
		18	286	429	249	374	218	328	173	261
		20	268	402	234	352	206	310	165	247
		22	249	374	219	329	194	291	155	233
		24	229	344	203	305	180	271	144	217
		26	209	315	186	280	166	250	133	201
		28	190	285	170	255	152	229	122	184
		30	171	256	154	231	138	208	111	168
		32	152	228	138	207	125	187	100	151
		34	136	204	123	185	112	168	90.5	136
		36	122	183	111	167	101	151	81.9	123
		40	99.9	150	91.1	137	82.9	125		
Properties										
A_g, in.^{2}			25.0		23.5		22.1		19.9	
r_x, in.			5.61		5.61		5.62		5.66	
r_y, in.			2.53		2.50		2.47		2.38	
ASD			LRFD		[c] Shape is slender for compression with F_y = 50 ksi. Note: Heavy line indicates KL/r equal to or greater than 200.					
Ω_c = 1.67			ϕ_c = 0.90							

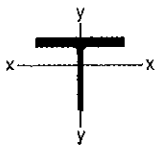

WT16.5

Table 4-7 (continued)
Available Strength in Axial Compression, kips
WT-Shapes

F_y = 50 ksi

Shape			WT16.5×									
lb/ft			193.5[b]		177[b]		159		145.5[c]		131.5[c]	
Design			P_n/Ω_c ASD	$\phi_c P_n$ LRFD	P_n/Ω_c ASD	$\phi_c P_n$ LRFD	P_n/Ω_c ASD	$\phi_c P_n$ LRFD	P_n/Ω_c ASD	$\phi_c P_n$ LRFD	P_n/Ω_c ASD	$\phi_c P_n$ LRFD
Effective length, KL (ft), with respect to indicated axis	X-X Axis	0	1710	2570	1560	2340	1400	2110	1270	1910	1040	1570
		10	1640	2460	1500	2250	1340	2020	1220	1830	1000	1510
		12	1610	2420	1470	2210	1320	1980	1190	1800	986	1480
		14	1570	2370	1440	2160	1290	1940	1170	1760	966	1450
		16	1540	2310	1400	2110	1260	1890	1140	1710	944	1420
		18	1490	2250	1360	2050	1220	1840	1110	1660	919	1380
		20	1450	2180	1320	1980	1180	1780	1070	1610	892	1340
		22	1400	2100	1280	1920	1140	1720	1030	1550	863	1300
		24	1350	2030	1230	1840	1100	1650	995	1490	833	1250
		26	1290	1940	1180	1770	1050	1580	953	1430	801	1200
		28	1240	1860	1130	1690	1010	1510	911	1370	768	1150
		30	1180	1770	1070	1610	958	1440	867	1300	734	1100
		32	1120	1690	1020	1530	909	1370	823	1240	700	1050
		34	1060	1600	964	1450	859	1290	778	1170	664	999
		36	1000	1510	910	1370	810	1220	733	1100	629	946
		40	886	1330	802	1200	712	1070	644	968	559	840
	Y-Y Axis	0	1710	2560	1560	2340	1400	2110	1270	1910	1040	1570
		10	1530	2300	1390	2090	1230	1850	1100	1650	899	1350
		12	1480	2230	1340	2020	1200	1800	1080	1620	883	1330
		14	1430	2150	1300	1950	1150	1730	1040	1570	861	1290
		16	1370	2060	1240	1860	1100	1660	1000	1510	831	1250
		18	1300	1960	1180	1770	1050	1580	956	1440	796	1200
		20	1230	1860	1120	1680	992	1490	904	1360	757	1140
		22	1160	1750	1050	1580	933	1400	849	1280	714	1070
		24	1090	1630	983	1480	872	1310	792	1190	670	1010
		26	1010	1520	914	1370	810	1220	734	1100	625	939
		28	936	1410	844	1270	748	1120	676	1020	579	871
		30	860	1290	775	1170	686	1030	618	929	534	802
		32	786	1180	708	1060	626	940	562	845	489	735
		34	714	1070	642	965	567	852	508	763	445	670
		36	644	968	578	869	509	766	455	684	403	606
		40	523	786	470	706	414	622	371	557	328	494
Properties												
A_g, in.^{2}			57.0		52.1		46.8		42.8		38.7	
r_x, in.			5.07		5.03		4.99		4.96		4.93	
r_y, in.			3.77		3.74		3.71		3.68		3.65	

ASD	LRFD
$\Omega_c = 1.67$	$\phi_c = 0.90$

[b] Flange thickness is greater than 2 in. Special requirements may apply per AISC *Specification* Section A3.1c.
[c] Shape is slender for compression with F_y = 50 ksi.

F_y = 50 ksi

Table 4-7 (continued)
Available Strength in Axial Compression, kips
WT-Shapes

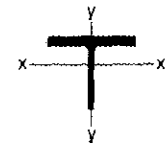

WT16.5

Shape			WT16.5×							
lb/ft			120.5[c]		110.5[c]		100.5[c]		84.5[c]	
Design			P_n/Ω_c ASD	$\phi_c P_n$ LRFD	P_n/Ω_c ASD	$\phi_c P_n$ LRFD	P_n/Ω_c ASD	$\phi_c P_n$ LRFD	P_n/Ω_c ASD	$\phi_c P_n$ LRFD
Effective length, KL (ft), with respect to indicated axis	X-X Axis	0	921	1380	780	1170	638	960	466	700
		10	887	1330	754	1130	619	930	454	683
		12	873	1310	742	1120	611	918	449	675
		14	857	1290	729	1100	601	903	443	666
		16	838	1260	714	1070	590	887	437	656
		18	817	1230	698	1050	578	868	429	645
		20	794	1190	680	1020	564	848	421	633
		22	770	1160	660	993	550	826	412	620
		24	744	1120	640	962	535	803	403	605
		26	717	1080	618	929	518	779	393	590
		28	689	1040	596	896	501	753	382	574
		30	660	992	573	861	484	727	371	558
		32	631	948	549	825	466	700	360	540
		34	601	903	524	788	447	672	348	523
		36	570	857	500	751	428	643	336	504
		40	510	766	450	677	390	586	311	467
	Y-Y Axis	0	921	1380	780	1170	638	960	466	700
		10	774	1160	648	974	524	787	382	574
		12	763	1150	640	962	518	779	369	555
		14	746	1120	628	944	510	767	353	530
		16	724	1090	611	919	499	751	333	501
		18	696	1050	591	888	485	729	312	468
		20	664	997	566	851	468	703	288	433
		22	628	945	538	809	448	673	264	397
		24	591	889	509	765	426	641	240	361
		26	553	831	478	719	403	606	216	325
		28	514	772	446	671	379	570	193	290
		30	474	713	415	623	354	533	171	256
		32	436	655	383	575	330	496	151	227
		34	398	598	352	528	305	459	134	202
		36	361	543	321	483	281	422	120	181
		40	295	443	264	397	234	352	98.1	147
Properties										
A_g, in.^{2}			35.6		32.6		29.7		24.7	
r_x, in.			4.96		4.95		4.95		5.12	
r_y, in.			3.62		3.59		3.56		2.50	

ASD	LRFD
Ω_c = 1.67	ϕ_c = 0.90

[c] Shape is slender for compression with F_y = 50 ksi.

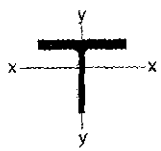

WT16.5

Table 4-7 (continued)
Available Strength in Axial Compression, kips
WT-Shapes

F_y = 50 ksi

Shape			WT16.5×							
lb/ft			76[c]		70.5[c]		65[c]		59[c]	
Design			P_n/Ω_c ASD	$\phi_c P_n$ LRFD	P_n/Ω_c ASD	$\phi_c P_n$ LRFD	P_n/Ω_c ASD	$\phi_c P_n$ LRFD	P_n/Ω_c ASD	$\phi_c P_n$ LRFD
Effective length, KL (ft), with respect to indicated axis	X-X Axis	0	390	586	325	489	284	426	235	353
		10	381	573	319	479	278	418	231	347
		12	377	567	316	475	276	415	229	344
		14	373	560	312	469	273	410	227	341
		16	368	553	308	464	270	406	225	338
		18	362	544	304	457	266	400	222	334
		20	356	535	299	450	262	394	219	329
		22	349	524	294	442	258	388	216	324
		24	342	513	289	434	254	381	212	319
		26	334	502	283	425	249	374	209	314
		28	325	489	276	415	244	366	205	308
		30	317	476	270	405	238	358	201	302
		32	308	463	263	395	232	349	196	295
		34	299	449	256	384	226	340	192	288
		36	289	435	248	373	220	331	187	281
		40	270	405	233	350	208	312	177	267
	Y-Y Axis	0	390	586	325	489	284	426	235	353
		10	311	467	257	386	216	325	172	259
		12	302	454	250	376	212	318	169	253
		14	291	437	242	364	205	308	164	246
		16	277	416	231	348	197	295	158	237
		18	260	391	219	329	187	281	151	227
		20	242	364	205	308	176	264	143	214
		22	224	336	191	286	164	246	134	201
		24	205	308	175	264	151	227	124	187
		26	186	279	160	241	138	208	114	172
		28	167	251	145	218	125	189	104	157
		30	149	223	130	196	113	170	94.5	142
		32	132	198	116	174	101	152	84.8	127
		34	118	177	104	156	90.3	136	76.3	115
		36	106	159	93.2	140	81.3	122	68.9	103
		40	86.3	130	76.3	115				
Properties										
A_g, in.^{2}			22.5		20.7		19.1		17.4	
r_x, in.			5.14		5.15		5.18		5.20	
r_y, in.			2.47		2.43		2.38		2.32	

ASD	LRFD
Ω_c = 1.67	ϕ_c = 0.90

[c] Shape is slender for compression with F_y = 50 ksi.
Note: Heavy line indicates *KL/r* equal to or greater than 200.

Table 4-7 (continued)

Available Strength in Axial Compression, kips

WT-Shapes

F_y = 50 ksi

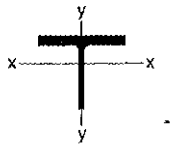

WT15

Shape			WT15×											
lb/ft			195.5[b]		178.5[b]		163[b]		146		130.5		117.5[c]	
Design			P_n/Ω_c ASD	$\phi_c P_n$ LRFD	P_n/Ω_c ASD	$\phi_c P_n$ LRFD	P_n/Ω_c ASD	$\phi_c P_n$ LRFD	P_n/Ω_c ASD	$\phi_c P_n$ LRFD	P_n/Ω_c ASD	$\phi_c P_n$ LRFD	P_n/Ω_c ASD	$\phi_c P_n$ LRFD
Effective length, KL (ft), with respect to indicated axis	X-X Axis	0	1720	2590	1570	2360	1440	2160	1290	1940	1150	1730	988	1480
		10	1640	2470	1490	2250	1360	2050	1220	1840	1090	1640	938	1410
		12	1610	2410	1460	2200	1330	2010	1190	1790	1070	1610	917	1380
		14	1560	2350	1420	2140	1300	1950	1160	1750	1040	1560	893	1340
		16	1520	2280	1380	2080	1260	1890	1130	1690	1010	1510	866	1300
		18	1470	2210	1330	2010	1220	1830	1090	1630	971	1460	836	1260
		20	1410	2130	1280	1930	1170	1760	1040	1570	933	1400	804	1210
		22	1360	2040	1230	1850	1120	1680	999	1500	892	1340	770	1160
		24	1300	1950	1170	1760	1070	1610	952	1430	850	1280	734	1100
		26	1230	1850	1120	1680	1010	1520	903	1360	806	1210	698	1050
		28	1170	1760	1060	1590	959	1440	853	1280	761	1140	660	992
		30	1100	1660	997	1500	904	1360	803	1210	716	1080	622	934
		32	1040	1560	936	1410	848	1270	752	1130	670	1010	583	877
		34	973	1460	875	1320	792	1190	702	1060	625	940	545	819
		36	907	1360	815	1230	737	1110	652	980	580	872	507	762
		40	781	1170	699	1050	630	947	556	836	494	743	434	652
	Y-Y Axis	0	1720	2590	1570	2360	1440	2160	1290	1930	1150	1730	988	1480
		10	1560	2340	1410	2120	1280	1930	1140	1710	1010	1510	853	1280
		12	1510	2260	1370	2050	1240	1860	1100	1660	972	1460	835	1250
		14	1450	2180	1310	1970	1190	1790	1060	1590	932	1400	808	1210
		16	1380	2080	1250	1880	1130	1710	1010	1520	889	1340	774	1160
		18	1310	1970	1190	1790	1080	1620	956	1440	841	1260	735	1100
		20	1240	1860	1120	1680	1010	1520	900	1350	791	1190	693	1040
		22	1160	1750	1050	1580	948	1420	841	1260	739	1110	648	974
		24	1080	1630	977	1470	881	1320	782	1180	686	1030	602	905
		26	1000	1510	903	1360	814	1220	722	1080	632	950	556	835
		28	922	1390	830	1250	747	1120	662	995	579	870	509	765
		30	843	1270	758	1140	681	1020	603	906	526	791	464	697
		32	766	1150	688	1030	617	927	546	820	475	714	419	630
		34	692	1040	620	932	555	834	490	737	425	639	376	566
		36	619	931	555	834	495	744	438	658	380	571	337	506
		40	503	755	450	677	402	604	356	535	309	464	274	412
Properties														
A_g, in.^{2}			57.6		52.5		48.0		43.0		38.5		34.7	
r_x, in.			4.61		4.56		4.52		4.48		4.46		4.41	
r_y, in.			3.67		3.64		3.60		3.58		3.53		3.51	

ASD	LRFD
Ω_c = 1.67	ϕ_c = 0.90

[b] Flange thickness is greater than 2 in. Special requirements may apply per AISC *Specification* Section A3.1c.
[c] Shape is slender for compression with F_y = 50 ksi.

WT15

Table 4-7 (continued)
Available Strength in Axial Compression, kips
WT-Shapes

F_y = 50 ksi

Shape			WT15×									
lb/ft			105.5[c]		95.5[c]		86.5[c]		74[c]		66[c]	
Design			P_n/Ω_c ASD	$\phi_c P_n$ LRFD	P_n/Ω_c ASD	$\phi_c P_n$ LRFD	P_n/Ω_c ASD	$\phi_c P_n$ LRFD	P_n/Ω_c ASD	$\phi_c P_n$ LRFD	P_n/Ω_c ASD	$\phi_c P_n$ LRFD
Effective length, KL (ft), with respect to indicated axis	X-X Axis	0	833	1250	687	1030	557	838	469	704	384	577
		10	794	1190	657	987	536	805	452	680	372	558
		12	778	1170	644	968	527	791	445	669	366	551
		14	759	1140	630	946	516	775	437	657	360	542
		16	737	1110	613	922	504	757	428	644	354	531
		18	713	1070	595	894	490	737	418	628	346	520
		20	688	1030	575	865	476	715	407	612	338	508
		22	661	993	555	833	460	692	395	594	329	494
		24	632	950	532	800	444	667	382	575	319	480
		26	602	905	509	766	427	641	369	555	309	465
		28	572	860	486	730	409	615	355	534	299	449
		30	541	813	462	694	391	587	341	513	288	433
		32	510	766	437	657	372	559	327	491	277	416
		34	478	719	412	620	353	531	312	469	265	399
		36	447	672	387	582	334	502	297	446	254	382
		40	387	581	339	509	296	445	267	401	230	346
	Y-Y Axis	0	833	1250	687	1030	557	838	469	704	384	577
		10	704	1060	574	862	460	691	374	561	297	447
		12	692	1040	565	850	455	683	355	533	284	428
		14	673	1010	553	831	446	671	331	498	268	403
		16	649	975	536	805	435	654	305	459	249	374
		18	620	931	514	773	420	632	277	417	228	343
		20	587	882	490	736	403	606	249	374	207	310
		22	551	829	463	696	383	576	221	332	185	278
		24	515	773	434	653	362	544	193	290	163	245
		26	477	717	405	609	340	511	167	251	142	214
		28	439	660	375	564	317	477	145	218	124	186
		30	402	604	346	520	295	443	127	191	109	164
		32	365	549	316	476	272	408	112	168	96.3	145
		34	330	496	288	433	249	375	99.6	150	85.8	129
		36	296	445	260	391	228	342	89.1	134	76.8	115
		40	241	362	212	319	187	281				
Properties												
A_g, in.^{2}			31.1		28.0		25.4		21.8		19.5	
r_x, in.			4.43		4.42		4.42		4.63		4.66	
r_y, in.			3.49		3.46		3.42		2.28		2.25	
ASD			LRFD		[c] Shape is slender for compression with F_y = 50 ksi.							
Ω_c = 1.67			ϕ_c = 0.90		Note: Heavy line indicates KL/r equal to or greater than 200.							

F_y = 50 ksi

Table 4-7 (continued)
Available Strength in Axial Compression, kips
WT-Shapes

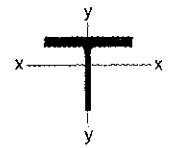

WT15

Shape			WT15×									
lb/ft			62[c]		58[c]		54[c]		49.5[c]		45[c]	
Design			P_n/Ω_c ASD	$\phi_c P_n$ LRFD	P_n/Ω_c ASD	$\phi_c P_n$ LRFD	P_n/Ω_c ASD	$\phi_c P_n$ LRFD	P_n/Ω_c ASD	$\phi_c P_n$ LRFD	P_n/Ω_c ASD	$\phi_c P_n$ LRFD
Effective length, KL (ft), with respect to indicated axis	X-X Axis	0	327	492	292	439	256	384	214	322	159	239
		10	318	478	284	427	249	374	209	314	156	235
		12	314	472	280	422	246	370	207	311	155	233
		14	309	465	277	416	243	365	204	307	153	231
		16	304	457	272	409	239	360	202	303	152	228
		18	298	448	267	401	235	354	198	298	150	225
		20	291	438	261	393	231	347	195	293	147	222
		22	284	427	255	384	226	339	191	287	145	218
		24	277	416	249	374	220	331	187	281	143	214
		26	269	404	242	364	215	323	183	275	140	210
		28	261	392	235	353	209	314	178	268	137	206
		30	252	379	228	342	203	305	173	261	134	201
		32	243	365	220	331	196	295	168	253	131	196
		34	234	351	212	319	190	285	163	245	127	192
		36	224	337	204	307	183	275	158	238	124	186
		40	205	309	186	282	169	255	147	221	117	176
	Y-Y Axis	0	327	492	292	439	256	384	214	322	159	239
		10	253	381	221	332	187	282	152	229	115	173
		12	244	366	213	320	181	272	147	222	112	169
		14	231	347	203	305	173	260	141	212	109	163
		16	216	325	190	286	163	245	134	201	104	157
		18	199	300	176	265	152	228	125	188	98.9	149
		20	182	273	161	242	139	209	116	174	92.9	140
		22	164	247	146	219	126	190	106	159	86.4	130
		24	146	220	130	196	114	171	95.3	143	79.6	120
		26	129	194	115	173	101	152	85.1	128	72.6	109
		28	113	169	101	152	88.5	133	75.2	113	65.7	98.7
		30	99.1	149	88.8	133	78.2	118	66.6	100	58.7	88.3
		32	87.7	132	78.8	118	69.5	105	59.4	89.3	52.5	79.0
		34	78.2	118	70.3	106	62.2	93.4	53.2	80.0	47.2	70.9
		36	70.1	105	63.1	94.8						
Properties												
A_g, in.^{2}			18.2		17.1		15.9		14.5		13.2	
r_x, in.			4.66		4.67		4.69		4.71		4.69	
r_y, in.			2.23		2.19		2.15		2.10		2.09	
ASD			LRFD									
Ω_c = 1.67			ϕ_c = 0.90									

[c] Shape is slender for compression with F_y = 50 ksi.
Note: Heavy line indicates KL/r equal to or greater than 200.

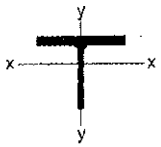

WT13.5

Table 4-7 (continued)
Available Strength in Axial Compression, kips
WT-Shapes

F_y = 50 ksi

Shape			WT13.5×											
lb/ft			129		117.5		108.5		97[c]		89[c]		80.5[c]	
Design			P_n/Ω_c ASD	$\phi_c P_n$ LRFD	P_n/Ω_c ASD	$\phi_c P_n$ LRFD	P_n/Ω_c ASD	$\phi_c P_n$ LRFD	P_n/Ω_c ASD	$\phi_c P_n$ LRFD	P_n/Ω_c ASD	$\phi_c P_n$ LRFD	P_n/Ω_c ASD	$\phi_c P_n$ LRFD
Effective length, KL (ft), with respect to indicated axis	X-X Axis	0	1140	1710	1040	1560	958	1440	819	1230	736	1110	605	909
		10	1070	1610	973	1460	896	1350	767	1150	692	1040	571	859
		12	1040	1560	945	1420	870	1310	746	1120	673	1010	557	837
		14	1000	1510	913	1370	840	1260	721	1080	651	979	541	813
		16	965	1450	878	1320	807	1210	693	1040	627	943	522	785
		18	924	1390	839	1260	771	1160	663	997	601	904	502	755
		20	879	1320	798	1200	732	1100	632	949	573	862	481	723
		22	832	1250	756	1140	692	1040	598	899	544	818	458	689
		24	784	1180	711	1070	651	978	563	847	514	772	435	654
		26	734	1100	666	1000	609	915	528	794	483	725	411	617
		28	684	1030	620	932	566	851	492	740	451	678	386	580
		30	635	954	575	864	524	787	457	686	420	631	361	543
		32	585	880	530	796	482	724	421	633	388	584	336	506
		34	537	807	486	730	441	663	387	581	358	538	312	469
		36	490	737	443	666	401	603	353	531	328	493	288	433
		40	402	604	362	544	327	492	290	435	270	406	242	364
	Y-Y Axis	0	1140	1710	1040	1560	958	1440	819	1230	736	1110	605	909
		10	1010	1510	908	1360	832	1250	703	1060	616	925	502	755
		12	967	1450	872	1310	800	1200	683	1030	601	904	493	740
		14	922	1390	832	1250	763	1150	657	987	580	872	478	719
		16	874	1310	788	1180	722	1090	624	938	553	831	459	690
		18	822	1230	740	1110	679	1020	588	884	522	784	436	655
		20	767	1150	690	1040	633	951	549	825	488	733	411	617
		22	711	1070	639	960	586	880	508	764	452	679	383	576
		24	653	982	587	882	538	808	467	702	416	625	355	534
		26	596	896	535	804	490	737	426	640	379	570	326	491
		28	540	812	484	727	443	666	386	579	343	516	298	448
		30	486	730	434	653	398	598	346	520	308	463	270	406
		32	433	651	386	581	353	531	308	463	274	412	243	365
		34	384	577	343	515	314	472	274	411	244	366	217	326
		36	343	515	306	460	280	421	245	368	218	328	194	292
		40	278	418	249	374	228	342	199	299	178	267	158	238
Properties														
A_g, in.^{2}			38.1		34.7		32.0		28.6		26.3		23.8	
r_x, in.			4.02		4.00		3.96		3.94		3.97		3.95	
r_y, in.			3.36		3.33		3.32		3.29		3.25		3.23	

ASD	LRFD
Ω_c = 1.67	ϕ_c = 0.90

[c] Shape is slender for compression with F_y = 50 ksi.

F_y = 50 ksi

Table 4-7 (continued)
Available Strength in Axial Compression, kips
WT-Shapes

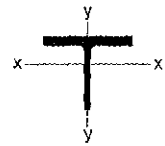

WT13.5

Shape			WT13.5×											
lb/ft			73[c]		64.5[c]		57[c]		51[c]		47[c]		42[c]	
Design			P_n/Ω_c ASD	$\phi_c P_n$ LRFD	P_n/Ω_c ASD	$\phi_c P_n$ LRFD	P_n/Ω_c ASD	$\phi_c P_n$ LRFD	P_n/Ω_c ASD	$\phi_c P_n$ LRFD	P_n/Ω_c ASD	$\phi_c P_n$ LRFD	P_n/Ω_c ASD	$\phi_c P_n$ LRFD
Effective length, KL (ft), with respect to indicated axis	X-X Axis	0	493	742	432	649	351	527	262	394	217	326	176	264
		10	469	704	412	619	336	505	253	380	210	316	171	257
		12	458	689	403	606	330	496	249	374	207	311	169	253
		14	446	670	394	592	322	485	244	367	204	306	166	250
		16	433	650	383	575	314	472	239	359	200	300	163	245
		18	418	628	371	557	305	459	233	350	196	294	160	241
		20	402	604	358	538	296	444	227	341	191	287	157	235
		22	385	578	344	517	285	429	220	331	186	279	153	230
		24	367	551	329	495	274	412	213	320	180	271	149	224
		26	348	524	314	472	263	395	206	309	175	263	145	218
		28	330	495	298	449	251	377	198	297	169	254	140	211
		30	310	467	283	425	239	359	190	285	163	245	136	204
		32	291	438	267	401	227	341	181	273	156	235	131	197
		34	272	409	250	376	214	322	173	260	150	225	126	190
		36	253	381	235	352	202	303	165	247	143	216	121	182
		40	216	325	203	305	177	266	148	222	130	196	111	167
	Y-Y Axis	0	493	742	432	649	351	527	262	394	217	326	176	264
		10	406	610	341	513	270	406	204	306	167	251	130	196
		12	399	600	321	482	256	385	195	294	161	242	126	190
		14	390	586	296	445	239	359	185	277	153	230	121	182
		16	377	566	269	405	220	330	172	258	144	216	115	172
		18	361	542	242	363	199	298	158	238	133	200	107	161
		20	342	514	214	321	177	266	143	216	122	183	98.7	148
		22	321	483	186	280	156	234	129	193	110	166	90.1	135
		24	300	451	160	240	135	204	114	172	98.9	149	81.3	122
		26	278	418	137	206	117	175	100	150	87.7	132	72.7	109
		28	256	385	119	179	101	152	87.1	131	76.8	115	64.1	96.4
		30	234	352	104	156	88.9	134	76.5	115	67.6	102	56.6	85.1
		32	212	319	91.8	138	78.6	118	67.7	102	59.9	90.0	50.3	75.7
		34	192	288	81.6	123	69.9	105	60.3	90.6	53.4	80.3	45.0	67.6
		36	172	258	72.9	110	62.6	94.0						
		40	140	211										
Properties														
A_g, in.^{2}			21.6		18.9		16.8		15.0		13.8		12.4	
r_x, in.			3.95		4.13		4.15		4.14		4.16		4.18	
r_y, in.			3.20		2.21		2.18		2.15		2.12		2.07	

ASD	LRFD
Ω_c = 1.67	ϕ_c = 0.90

[c] Shape is slender for compression with F_y = 50 ksi.
Note: Heavy line indicates KL/r equal to or greater than 200.

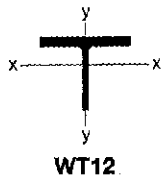

WT12

Table 4-7 (continued)
Available Strength in Axial Compression, kips
WT-Shapes

F_y = 50 ksi

Shape			WT12×											
lb/ft			185[h]		167.5[h]		153[h]		139.5[h]		125		114.5	
Design			P_n/Ω_c ASD	$\phi_c P_n$ LRFD	P_n/Ω_c ASD	$\phi_c P_n$ LRFD	P_n/Ω_c ASD	$\phi_c P_n$ LRFD	P_n/Ω_c ASD	$\phi_c P_n$ LRFD	P_n/Ω_c ASD	$\phi_c P_n$ LRFD	P_n/Ω_c ASD	$\phi_c P_n$ LRFD
Effective length, KL (ft), with respect to indicated axis	X-X Axis	0	1630	2450	1470	2210	1340	2020	1230	1850	1100	1660	1010	1510
		10	1520	2280	1360	2050	1240	1870	1130	1700	1020	1530	927	1390
		12	1470	2210	1320	1980	1200	1810	1100	1650	981	1470	894	1340
		14	1410	2120	1270	1900	1160	1740	1050	1580	940	1410	856	1290
		16	1350	2030	1210	1820	1100	1660	1000	1510	896	1350	815	1230
		18	1290	1930	1150	1730	1050	1570	950	1430	848	1270	771	1160
		20	1220	1830	1090	1630	987	1480	895	1340	798	1200	724	1090
		22	1140	1720	1020	1530	925	1390	837	1260	745	1120	676	1020
		24	1070	1600	951	1430	861	1290	779	1170	692	1040	627	942
		26	992	1490	881	1320	797	1200	719	1080	638	959	577	868
		28	916	1380	812	1220	733	1100	661	993	585	879	528	794
		30	841	1260	744	1120	670	1010	603	906	532	800	480	722
		32	767	1150	677	1020	609	915	546	821	482	724	434	652
		34	696	1050	613	921	550	827	492	740	433	651	389	584
		36	627	943	550	827	492	740	440	661	386	581	347	521
		40	508	764	446	670	399	599	356	536	313	470	281	422
	Y-Y Axis	0	1630	2450	1470	2210	1340	2020	1230	1840	1100	1660	1010	1510
		10	1460	2200	1310	1970	1190	1800	1090	1630	969	1460	879	1320
		12	1400	2110	1260	1890	1140	1720	1040	1560	926	1390	839	1260
		14	1330	2000	1190	1790	1080	1630	984	1480	877	1320	794	1190
		16	1260	1890	1120	1690	1020	1530	925	1390	823	1240	745	1120
		18	1180	1770	1050	1580	952	1430	862	1300	767	1150	693	1040
		20	1090	1640	972	1460	881	1320	797	1200	708	1060	639	961
		22	1010	1510	894	1340	809	1220	731	1100	648	974	584	878
		24	919	1380	815	1230	737	1110	664	998	588	884	529	796
		26	833	1250	738	1110	665	1000	599	900	529	796	476	715
		28	750	1130	662	995	596	896	535	805	472	710	424	637
		30	669	1010	589	886	529	796	474	713	417	627	373	561
		32	591	889	520	781	466	700	417	627	367	552	328	493
		34	524	788	460	692	413	621	370	556	325	489	291	438
		36	468	703	411	618	369	554	330	496	290	437	260	391
		40	379	570	333	501	299	449	268	402	236	354	211	317
Properties														
A_g, in.^{2}			54.5		49.1		44.9		41.0		36.8		33.6	
r_x, in.			3.78		3.73		3.69		3.65		3.61		3.58	
r_y, in.			3.27		3.23		3.20		3.17		3.14		3.11	

ASD	LRFD
$\Omega_c = 1.67$	$\phi_c = 0.90$

[h] Flange thickness is greater than 2 in. Special requirements may apply per AISC *Specification* Section A3.1c.

Table 4-7 (continued)

Available Strength in Axial Compression, kips

WT-Shapes

F_y = 50 ksi

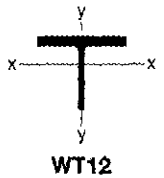

WT12

Shape			WT12×									
lb/ft			103.5		96		88		81		73[c]	
Design			P_n/Ω_c ASD	$\phi_c P_n$ LRFD	P_n/Ω_c ASD	$\phi_c P_n$ LRFD	P_n/Ω_c ASD	$\phi_c P_n$ LRFD	P_n/Ω_c ASD	$\phi_c P_n$ LRFD	P_n/Ω_c ASD	$\phi_c P_n$ LRFD
Effective length, KL (ft), with respect to indicated axis	X-X Axis	0	907	1360	844	1270	772	1160	716	1080	605	909
		10	834	1250	776	1170	709	1070	657	987	558	839
		12	804	1210	748	1120	683	1030	632	950	539	810
		14	770	1160	715	1080	653	982	605	909	516	776
		16	733	1100	680	1020	621	933	574	863	492	740
		18	692	1040	642	965	586	880	542	814	466	700
		20	649	976	602	905	549	825	507	763	438	658
		22	605	910	561	843	511	768	472	709	409	615
		24	561	843	519	780	472	710	436	656	380	571
		26	516	775	477	717	433	652	400	602	350	527
		28	471	708	435	654	395	594	365	548	321	483
		30	428	643	395	593	358	538	330	496	292	440
		32	386	580	355	534	322	484	297	446	265	398
		34	345	518	317	477	287	431	264	397	238	357
		36	308	462	283	425	256	385	236	354	212	319
		40	249	374	229	345	207	312	191	287	172	258
	Y-Y Axis	0	907	1360	844	1270	772	1160	716	1080	605	909
		10	787	1180	728	1090	660	991	605	909	504	758
		12	751	1130	694	1040	629	945	577	867	488	734
		14	710	1070	657	987	594	893	546	821	466	701
		16	665	1000	616	925	557	837	512	770	439	660
		18	618	929	572	860	517	777	476	715	410	616
		20	570	856	527	792	475	715	438	659	378	568
		22	520	781	481	722	433	651	400	602	345	519
		24	470	707	435	653	391	588	362	544	313	470
		26	422	634	390	586	350	526	324	488	281	422
		28	375	563	346	520	310	467	288	433	250	375
		30	329	495	304	457	272	409	253	380	220	330
		32	290	436	268	402	240	360	223	335	194	291
		34	257	387	237	357	213	320	198	297	172	259
		36	230	345	212	319	190	286	177	266	154	231
		40	186	280	172	259	154	232	144	216	125	188
Properties												
A_g, in.^{2}			30.3		28.2		25.8		23.9		21.5	
r_x, in.			3.55		3.53		3.51		3.50		3.50	
r_y, in.			3.08		3.07		3.04		3.05		3.01	
ASD			LRFD		[c] Shape is slender for compression with F_y = 50 ksi.							
Ω_c = 1.67			ϕ_c = 0.90									

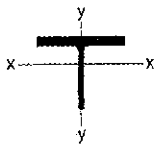

WT12

Table 4-7 (continued)
Available Strength in Axial Compression, kips
WT-Shapes

F_y = 50 ksi

Shape			WT12×									
lb/ft			65.5[c]		58.5[c]		52[c]		51.5[c]		47[c]	
Design			P_n/Ω_c ASD	$\phi_c P_n$ LRFD	P_n/Ω_c ASD	$\phi_c P_n$ LRFD	P_n/Ω_c ASD	$\phi_c P_n$ LRFD	P_n/Ω_c ASD	$\phi_c P_n$ LRFD	P_n/Ω_c ASD	$\phi_c P_n$ LRFD
Effective length, KL (ft), with respect to indicated axis	X-X Axis	0	511	769	409	615	317	476	349	525	292	439
		10	474	713	382	574	299	449	329	494	276	415
		12	459	690	371	557	291	438	320	481	270	405
		14	441	663	358	538	282	424	310	467	262	394
		16	422	634	344	517	272	410	299	450	254	381
		18	401	602	328	493	262	393	287	432	244	367
		20	379	569	312	468	250	376	274	412	234	352
		22	355	534	294	443	238	358	261	392	224	336
		24	332	498	277	416	225	339	247	371	212	319
		26	308	462	258	388	213	319	232	349	201	302
		28	284	426	240	361	199	300	218	327	189	285
		30	260	391	222	334	186	280	203	305	178	267
		32	237	356	204	307	173	260	188	283	166	249
		34	214	322	187	280	160	240	174	261	154	232
		36	193	289	170	255	147	221	160	240	143	215
		40	156	234	138	208	123	185	133	199	121	181
	Y-Y Axis	0	511	769	409	615	317	476	349	525	292	439
		10	416	625	327	491	249	375	267	401	223	335
		12	405	608	320	481	246	369	246	369	207	311
		14	389	585	310	466	240	360	222	333	189	284
		16	369	554	297	446	232	348	197	296	169	255
		18	345	519	280	422	221	333	171	258	149	225
		20	320	481	262	394	209	314	147	221	130	195
		22	294	442	243	365	196	294	124	186	110	166
		24	267	402	223	335	182	273	105	157	93.7	141
		26	241	362	203	305	167	252	89.6	135	80.4	121
		28	215	323	183	275	153	230	77.6	117	69.7	105
		30	190	286	164	246	139	208	67.8	102	61.0	91.7
		32	168	252	145	218	125	188	59.8	89.8	53.8	80.9
		34	149	224	129	194	111	167				
		36	134	201	116	174	100	150				
		40	109	164	94.5	142	81.7	123				
Properties												
A_g, in.^{2}			19.3		17.2		15.3		15.1		13.8	
r_x, in.			3.52		3.51		3.51		3.67		3.67	
r_y, in.			2.97		2.94		2.91		1.99		1.98	
ASD			LRFD		[c] Shape is slender for compression with F_y = 50 ksi.							
Ω_c = 1.67			ϕ_c = 0.90		Note: Heavy line indicates KL/r equal to or greater than 200.							

Table 4-7 (continued)

Available Strength in Axial Compression, kips

WT-Shapes

F_y = 50 ksi

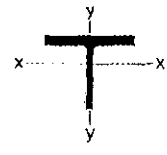

WT12

Shape			WT12×									
lb/ft			42[c]		38[c]		34[c]		31[c]		27.5[c]	
Design			P_n/Ω_c ASD	$\phi_c P_n$ LRFD	P_n/Ω_c ASD	$\phi_c P_n$ LRFD	P_n/Ω_c ASD	$\phi_c P_n$ LRFD	P_n/Ω_c ASD	$\phi_c P_n$ LRFD	P_n/Ω_c ASD	$\phi_c P_n$ LRFD
Effective length, KL (ft), with respect to indicated axis	X-X Axis	0	225	338	180	271	146	219	142	214	109	163
		10	215	323	173	260	140	211	137	206	105	158
		12	210	316	170	255	138	207	135	203	104	156
		14	205	308	166	249	135	203	132	199	102	153
		16	199	300	162	243	132	199	129	194	99.9	150
		18	193	290	157	236	129	194	126	189	97.7	147
		20	186	280	152	229	125	188	122	184	95.3	143
		22	179	269	147	221	121	183	118	178	92.8	139
		24	171	257	142	213	117	176	114	172	90.0	135
		26	163	245	136	204	113	170	110	165	87.1	131
		28	155	233	130	195	109	163	105	159	84.1	126
		30	147	221	124	186	104	156	101	152	81.0	122
		32	139	208	117	176	99.2	149	96.2	145	77.8	117
		34	130	196	111	167	94.5	142	91.5	138	74.5	112
		36	122	183	105	158	89.6	135	86.7	130	71.1	107
		40	105	158	92.3	139	80.0	120	77.2	116	64.4	96.8
	Y-Y Axis	0	225	338	180	271	146	219	142	214	109	163
		10	172	258	136	205	107	160	90.2	136	68.2	103
		12	162	244	130	195	102	154	80.9	122	62.0	93.2
		14	150	226	121	182	96.3	145	70.4	106	54.9	82.6
		16	137	205	112	168	89.3	134	59.7	89.7	47.4	71.3
		18	122	184	101	152	81.5	122	49.3	74.1	39.9	59.9
		20	108	162	90.4	136	73.4	110	41.0	61.6	33.4	50.2
		22	94.0	141	79.8	120	65.2	98.0	34.5	51.9	28.3	42.5
		24	80.5	121	69.3	104	57.2	85.9				
		26	69.3	104	59.8	89.9	49.5	74.5				
		28	60.2	90.4	52.1	78.3	43.3	65.1				
		30	52.7	79.3	45.7	68.7	38.1	57.3				
		32	46.6	70.0	40.4	60.7						
Properties												
A_g, in.^{2}			12.4		11.2		10.00		9.11		8.10	
r_x, in.			3.67		3.68		3.70		3.79		3.80	
r_y, in.			1.95		1.92		1.87		1.38		1.34	
ASD			LRFD		[c] Shape is slender for compression with F_y = 50 ksi.							
Ω_c = 1.67			ϕ_c = 0.90		Note: Heavy line indicates KL/r equal to or greater than 200.							

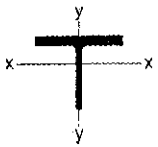

WT10.5

Table 4-7 (continued)
Available Strength in Axial Compression, kips
WT-Shapes

F_y = 50 ksi

Shape			WT10.5×											
lb/ft			100.5		91		83		73.5		66		61	
Design			P_n/Ω_c ASD	$\phi_c P_n$ LRFD	P_n/Ω_c ASD	$\phi_c P_n$ LRFD	P_n/Ω_c ASD	$\phi_c P_n$ LRFD	P_n/Ω_c ASD	$\phi_c P_n$ LRFD	P_n/Ω_c ASD	$\phi_c P_n$ LRFD	P_n/Ω_c ASD	$\phi_c P_n$ LRFD
Effective length, KL (ft), with respect to indicated axis	X-X Axis	0	886	1330	802	1210	731	1100	647	972	581	873	535	804
		10	794	1190	718	1080	652	980	579	870	519	780	477	717
		12	757	1140	683	1030	620	932	551	828	494	742	454	682
		14	715	1070	645	969	584	878	520	782	466	700	428	643
		16	669	1010	603	906	546	820	487	732	436	655	400	601
		18	621	934	559	840	505	759	451	678	403	606	370	556
		20	572	859	513	771	463	696	415	624	370	557	339	510
		22	521	784	467	702	421	633	378	568	337	507	308	464
		24	471	709	422	634	379	570	341	513	304	457	278	418
		26	423	635	377	567	338	508	305	459	272	408	248	373
		28	375	564	334	502	299	449	271	407	241	362	219	330
		30	330	496	293	440	262	393	238	357	211	317	192	288
		32	290	436	257	387	230	345	209	314	185	278	169	253
		34	257	386	228	343	204	306	185	278	164	247	149	225
		36	229	344	203	306	182	273	165	248	146	220	133	200
		40	186	279	165	248	147	221	134	201	119	178	108	162
	Y-Y Axis	0	886	1330	802	1210	731	1100	647	972	581	873	535	804
		10	774	1160	697	1050	632	949	548	824	486	730	439	660
		12	737	1110	663	996	601	903	521	783	462	694	423	636
		14	695	1040	625	939	566	851	491	738	435	654	401	603
		16	649	975	583	877	528	794	458	688	406	610	375	563
		18	601	903	540	811	489	734	423	636	375	563	346	519
		20	551	828	494	743	448	673	387	582	343	515	315	474
		22	501	753	449	675	406	611	351	527	311	467	285	428
		24	451	678	404	607	365	549	315	473	279	419	254	382
		26	402	605	360	541	325	489	280	420	247	372	225	338
		28	355	534	317	477	287	431	246	370	217	326	196	295
		30	311	467	277	417	251	377	215	323	190	285	172	258
		32	273	411	244	367	220	331	189	284	167	251	151	227
		34	242	364	216	325	195	294	168	252	148	223	134	202
		36	216	325	193	290	175	262	150	225	132	199	120	181
		40	175	264	157	235	142	213	122	183	108	162	97.6	147
Properties														
A_g, in.^{2}			29.6		26.8		24.4		21.6		19.4		17.9	
r_x, in.			3.10		3.07		3.04		3.08		3.06		3.04	
r_y, in.			3.02		3.00		2.99		2.95		2.93		2.91	
ASD			LRFD											
Ω_c = 1.67			ϕ_c = 0.90											

Table 4-7 (continued)

Available Strength in Axial Compression, kips

WT-Shapes

F_y = 50 ksi

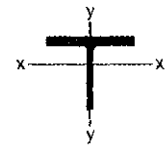

WT10.5

Shape			WT10.5×											
lb/ft			55.5[c]		50.5[c]		46.5[c]		41.5[c]		36.5[c]		34[c]	
Design			P_n/Ω_c ASD	$\phi_c P_n$ LRFD	P_n/Ω_c ASD	$\phi_c P_n$ LRFD	P_n/Ω_c ASD	$\phi_c P_n$ LRFD	P_n/Ω_c ASD	$\phi_c P_n$ LRFD	P_n/Ω_c ASD	$\phi_c P_n$ LRFD	P_n/Ω_c ASD	$\phi_c P_n$ LRFD
Effective length, KL (ft), with respect to indicated axis	X-X Axis	0	447	671	368	552	396	596	312	469	233	351	197	296
		10	402	604	334	502	360	541	286	430	217	325	184	276
		12	384	577	320	481	345	518	275	414	210	315	178	268
		14	364	546	305	458	328	493	263	396	202	303	172	259
		16	341	513	288	432	310	465	250	376	193	290	165	249
		18	318	478	270	405	290	436	236	354	183	275	158	238
		20	294	441	251	377	270	405	221	331	173	260	150	226
		22	269	404	231	348	249	374	205	308	163	245	142	213
		24	244	367	212	318	228	342	189	285	152	228	133	200
		26	220	330	192	289	207	311	174	261	141	212	125	187
		28	196	295	174	261	186	280	156	238	130	196	116	174
		30	174	261	155	233	167	250	143	215	119	179	107	161
		32	153	229	138	207	148	222	128	193	109	164	98.5	148
		34	135	203	122	183	131	196	114	172	98.7	148	90.1	135
		36	121	181	109	163	117	175	102	153	88.8	133	82.0	123
		40	97.6	147	88.1	132	94.4	142	82.5	124	71.9	108	66.8	100
	Y-Y Axis	0	447	671	368	552	396	596	312	469	233	351	197	296
		10	364	547	298	448	276	415	222	334	170	256	145	218
		12	354	531	292	438	243	366	199	299	155	233	134	201
		14	338	508	281	422	209	314	174	262	138	208	121	181
		16	318	478	267	401	175	263	149	223	121	181	107	160
		18	296	445	251	377	142	214	124	186	103	155	92.6	139
		20	272	409	233	350	117	175	102	153	86.4	130	78.9	119
		22	248	372	214	321	97.0	146	84.9	128	72.2	108	66.2	99.5
		24	223	336	195	293	81.9	123	71.8	108	61.1	91.9	56.1	84.4
		26	199	300	176	264	70.1	105	61.4	92.4	52.4	78.8	48.2	72.4
		28	176	265	157	237	60.6	91.1	53.2	79.9	45.4	68.2	41.8	62.8
		30	154	232	139	210	52.9	79.6	46.5	69.8	39.7	59.7	36.5	54.9
		32	136	205	123	185								
		34	121	182	109	165								
		36	108	163	97.9	147								
		40	88.1	132	79.7	120								
Properties														
A_g, in.^{2}			16.3		14.9		13.7		12.2		10.7		10.0	
r_x, in.			3.03		3.01		3.25		3.22		3.21		3.20	
r_y, in.			2.90		2.89		1.84		1.83		1.81		1.80	

ASD	LRFD
Ω_c = 1.67	ϕ_c = 0.90

[c] Shape is slender for compression with F_y = 50 ksi.
Note: Heavy line indicates KL/r equal to or greater than 200.

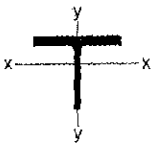

WT10.5

Table 4-7 (continued)
Available Strength in Axial Compression, kips
WT-Shapes

F_y = 50 ksi

Shape			WT10.5×											
lb/ft			31[c]		27.5[c]		24[c]		28.5[c]		25[c]		22[c]	
Design			P_n/Ω_c ASD	$\phi_c P_n$ LRFD	P_n/Ω_c ASD	$\phi_c P_n$ LRFD	P_n/Ω_c ASD	$\phi_c P_n$ LRFD	P_n/Ω_c ASD	$\phi_c P_n$ LRFD	P_n/Ω_c ASD	$\phi_c P_n$ LRFD	P_n/Ω_c ASD	$\phi_c P_n$ LRFD
Effective length, KL (ft), with respect to indicated axis	X-X Axis	0	158	238	127	190	98.0	147	150	225	117	177	90.0	135
		10	149	224	120	181	93.6	141	141	212	112	168	86.1	129
		12	145	218	117	176	91.7	138	138	207	109	164	84.4	127
		14	141	212	114	172	89.6	135	134	201	106	160	82.5	124
		16	136	204	111	166	87.1	131	129	194	103	155	80.3	121
		18	131	196	107	160	84.5	127	124	186	99.4	149	77.9	117
		20	125	188	103	154	81.6	123	119	178	95.6	144	75.3	113
		22	119	179	98.1	147	78.5	118	113	170	91.5	138	72.5	109
		24	113	169	93.5	140	75.3	113	107	161	87.3	131	69.6	105
		26	106	159	88.7	133	71.9	108	101	152	82.9	125	66.6	100
		28	99.5	150	83.8	126	68.4	103	94.9	143	78.4	118	63.5	95.4
		30	92.9	140	78.8	118	64.9	97.5	88.7	133	73.9	111	60.3	90.6
		32	86.4	130	73.8	111	61.3	92.1	82.5	124	69.3	104	57.0	85.7
		34	79.9	120	68.9	103	57.7	86.7	76.5	115	64.7	97.3	53.8	80.8
		36	73.5	111	64.0	96.1	54.1	81.3	70.5	106	60.2	90.5	50.5	76.0
		40	61.4	92.2	54.5	81.9	47.0	70.7	59.1	88.8	51.5	77.4	44.1	66.4
	Y-Y Axis	0	158	238	127	190	98.0	147	150	225	117	177	90.0	135
		10	117	176	90.7	136	66.7	100	96.2	145	73.3	110	55.3	83.1
		12	109	164	85.4	128	63.3	95.1	83.4	125	64.3	96.6	49.2	74.0
		14	99.6	150	78.8	118	58.9	88.5	70.1	105	54.6	82.0	42.5	63.9
		16	89.2	134	71.3	107	53.7	80.8	57.1	85.9	44.9	67.5	35.7	53.6
		18	78.5	118	63.4	95.3	48.2	72.4	46.0	69.2	36.5	54.8	29.3	44.0
		20	67.9	102	55.4	83.3	42.4	63.8	37.8	56.8	30.1	45.3	24.3	36.6
		22	57.7	86.7	47.6	71.5	36.7	55.2	31.5	47.4				
		24	49.0	73.7	40.6	61.1	31.6	47.5						
		26	42.2	63.4	35.1	52.7	27.4	41.2						
		28	36.6	55.0	30.5	45.9								
Properties														
A_g, in.^{2}			9.13		8.10		7.07		8.37		7.36		6.49	
r_x, in.			3.21		3.23		3.26		3.29		3.30		3.31	
r_y, in.			1.77		1.73		1.66		1.35		1.30		1.26	

ASD	LRFD
Ω_c = 1.67	ϕ_c = 0.90

[c] Shape is slender for compression with F_y = 50 ksi.
Note: Heavy line indicates KL/r equal to or greater than 200.

Table 4-7 (continued)

Available Strength in Axial Compression, kips

WT-Shapes

$F_y = 50$ ksi

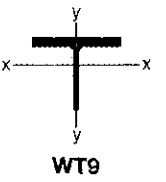

WT9

Shape			WT9×											
lb/ft			87.5		79		71.5		65		59.5		53	
Design			P_n/Ω_c ASD	$\phi_c P_n$ LRFD	P_n/Ω_c ASD	$\phi_c P_n$ LRFD	P_n/Ω_c ASD	$\phi_c P_n$ LRFD	P_n/Ω_c ASD	$\phi_c P_n$ LRFD	P_n/Ω_c ASD	$\phi_c P_n$ LRFD	P_n/Ω_c ASD	$\phi_c P_n$ LRFD
Effective length, KL (ft), with respect to indicated axis	X-X Axis	0	769	1160	695	1040	629	945	575	864	527	792	467	702
		10	663	997	597	897	538	809	491	738	451	678	399	600
		12	621	933	558	839	502	755	458	688	421	633	373	560
		14	575	864	515	775	463	696	422	634	388	584	343	516
		16	526	790	470	707	422	634	383	576	354	532	313	470
		18	475	714	424	638	380	571	344	518	318	478	281	422
		20	424	638	378	568	337	507	305	459	283	425	249	375
		22	374	563	332	500	296	445	267	402	248	373	219	328
		24	327	491	289	434	256	385	231	347	215	323	189	284
		26	281	422	248	372	219	329	197	297	184	276	162	243
		28	242	364	214	321	189	284	170	256	158	238	139	209
		30	211	317	186	280	165	247	148	223	138	207	121	182
		32	185	279	164	246	145	217	130	196	121	182	107	160
		34	164	247	145	218	128	193	115	173	107	161	94.5	142
		36	146	220	129	194	114	172	103	155	95.8	144	84.3	127
		40	119	178	105	157	92.6	139	83.4	125	77.6	117	68.3	103
	Y-Y Axis	0	769	1160	695	1040	629	945	575	864	527	792	467	702
		10	661	993	594	892	535	804	486	730	440	662	385	578
		12	622	936	559	840	503	756	457	686	414	622	362	544
		14	580	871	520	782	468	703	424	638	385	578	336	505
		16	534	803	479	720	430	647	390	586	354	532	308	464
		18	487	732	436	655	391	588	354	532	321	483	280	421
		20	439	659	392	589	352	528	318	478	288	433	251	377
		22	391	588	349	525	312	470	282	424	256	385	222	334
		24	345	518	307	462	274	412	247	372	224	337	194	292
		26	300	452	267	401	238	358	214	322	194	292	168	252
		28	259	390	230	346	205	309	185	278	168	252	145	218
		30	226	340	201	302	179	269	161	242	146	220	126	190
		32	199	299	177	266	158	237	142	213	129	193	111	167
		34	176	265	157	235	140	210	126	189	114	172	98.7	148
		36	157	236	140	210	125	187	112	169	102	153	88.2	133
		40	127	191	113	170	101	152	91.0	137	82.6	124	71.5	108
Properties														
A_g, in.^{2}			25.7		23.2		21.0		19.2		17.6		15.6	
r_x, in.			2.66		2.63		2.60		2.58		2.60		2.59	
r_y, in.			2.76		2.74		2.72		2.70		2.69		2.66	

ASD	LRFD
$\Omega_c = 1.67$	$\phi_c = 0.90$

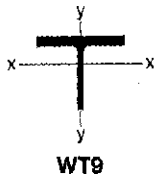

WT9

Table 4-7 (continued)
Available Strength in Axial Compression, kips
WT-Shapes

F_y = 50 ksi

Shape			WT9×											
lb/ft			48.5		43[c]		38[c]		35.5[c]		32.5[c]		30[c]	
Design			P_n/Ω_c ASD	$\phi_c P_n$ LRFD	P_n/Ω_c ASD	$\phi_c P_n$ LRFD	P_n/Ω_c ASD	$\phi_c P_n$ LRFD	P_n/Ω_c ASD	$\phi_c P_n$ LRFD	P_n/Ω_c ASD	$\phi_c P_n$ LRFD	P_n/Ω_c ASD	$\phi_c P_n$ LRFD
Effective length, KL (ft), with respect to indicated axis	X-X Axis	0	425	639	356	534	274	412	299	450	250	376	210	315
		10	362	544	306	459	239	360	262	393	221	332	187	281
		12	337	507	286	430	226	339	246	370	209	314	178	267
		14	310	466	264	397	210	316	230	345	196	295	168	252
		16	282	424	241	363	194	292	212	319	182	273	157	235
		18	253	380	218	327	177	266	193	291	167	251	145	218
		20	224	336	194	292	160	240	175	262	152	229	133	200
		22	195	294	171	257	143	215	156	234	137	206	121	182
		24	169	253	149	223	126	190	138	207	122	184	109	164
		26	144	216	128	192	110	166	120	181	108	162	97.1	146
		28	124	186	110	165	95.3	143	104	156	94.1	141	85.9	129
		30	108	162	95.8	144	83.1	125	90.6	136	81.9	123	75.1	113
		32	94.9	143	84.2	127	73.0	110	79.6	120	72.0	108	66.0	99.2
		34	84.0	126	74.6	112	64.7	97.2	70.5	106	63.8	95.9	58.5	87.9
		36	75.0	113	66.5	100	57.7	86.7	62.9	94.5	56.9	85.5	52.2	78.4
		40	60.7	91.2	53.9	81.0	46.7	70.2	50.9	76.6	46.1	69.3	42.3	63.5
	Y-Y Axis	0	425	639	356	534	274	412	299	450	250	376	210	315
		10	347	522	287	431	219	330	200	301	171	258	147	221
		12	327	491	274	412	212	319	173	259	150	225	130	195
		14	303	456	258	387	202	304	144	217	127	191	112	168
		16	279	419	238	358	189	284	117	176	105	158	93.7	141
		18	253	380	217	326	174	262	93.5	140	84.4	127	76.6	115
		20	226	340	195	293	159	238	76.3	115	68.9	104	62.6	94.1
		22	200	301	173	260	143	215	63.3	95.2	57.3	86.1	52.1	78.3
		24	175	263	152	229	127	191	53.4	80.3	48.4	72.7	44.0	66.1
		26	151	227	132	198	112	169	45.7	68.6	41.3	62.1	37.6	56.6
		28	131	196	114	172	97.7	147	39.5	59.3	35.7	53.7	32.6	48.9
		30	114	171	99.8	150	85.4	128						
		32	100	151	88.0	132	75.4	113						
		34	89.1	134	78.1	117	66.9	101						
		36	79.6	120	69.8	105	59.9	90.0						
		40	64.6	97.0	56.7	85.2	48.7	73.1						
Properties														
A_g, in.^{2}			14.2		12.7		11.1		10.4		9.55		8.82	
r_x, in.			2.56		2.55		2.54		2.74		2.72		2.71	
r_y, in.			2.65		2.63		2.61		1.70		1.69		1.68	

ASD	LRFD
Ω_c = 1.67	ϕ_c = 0.90

[c] Shape is slender for compression with F_y = 50 ksi.
Note: Heavy line indicates KL/r equal to or greater than 200.

Table 4-7 (continued)

Available Strength in Axial Compression, kips

WT-Shapes

F_y = 50 ksi

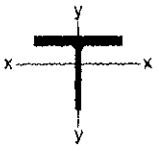

WT9

Shape			WT9×									
lb/ft			27.5[c]		25[c]		23[c]		20[c]		17.5[c]	
Design			P_n/Ω_c ASD	$\phi_c P_n$ LRFD	P_n/Ω_c ASD	$\phi_c P_n$ LRFD	P_n/Ω_c ASD	$\phi_c P_n$ LRFD	P_n/Ω_c ASD	$\phi_c P_n$ LRFD	P_n/Ω_c ASD	$\phi_c P_n$ LRFD
Effective length, KL (ft), with respect to indicated axis	X-X Axis	0	178	267	136	205	129	193	87.3	131	70.9	107
		10	160	241	125	187	118	177	81.5	123	66.6	100
		12	153	230	120	180	114	171	79.1	119	64.8	97.4
		14	145	218	114	172	109	163	76.3	115	62.7	94.3
		16	136	204	108	163	103	155	73.3	110	60.4	90.8
		18	127	190	102	153	97.1	146	69.9	105	57.9	87.1
		20	117	176	95.2	143	90.8	137	66.4	99.8	55.3	83.1
		22	107	161	88.3	133	84.4	127	62.7	94.2	52.5	78.8
		24	97.1	146	81.3	122	77.9	117	58.8	88.4	49.5	74.5
		26	87.4	131	74.4	112	71.4	107	54.9	82.6	46.6	70.0
		28	78.0	117	67.5	101	65.0	97.7	51.0	76.7	43.5	65.4
		30	69.0	104	60.9	91.5	58.8	88.3	47.1	70.8	40.5	60.9
		32	60.6	91.1	54.5	81.9	52.7	79.3	43.3	65.0	37.5	56.4
		34	53.7	80.7	48.3	72.6	46.9	70.5	39.5	59.4	34.5	51.9
		36	47.9	72.0	43.1	64.8	41.8	62.9	35.9	54.0	31.7	47.6
		40	38.8	58.3	34.9	52.5	33.9	50.9	29.2	43.9	26.2	39.3
	Y-Y Axis	0	178	267	136	205	129	193	87.3	131	70.9	107
		10	125	188	98.8	149	80.0	120	58.3	87.7	45.0	67.6
		12	112	168	90.0	135	67.5	101	51.0	76.6	39.6	59.4
		14	97.5	147	80.0	120	55.0	82.6	43.3	65.1	33.7	50.6
		16	82.8	125	69.6	105	43.4	65.2	35.8	53.7	27.9	41.9
		18	68.7	103	59.3	89.1	34.7	52.2	28.8	43.4	22.6	34.0
		20	56.3	84.7	49.4	74.2	28.4	42.6	23.6	35.5	18.7	28.0
		22	47.0	70.6	41.2	62.0						
		24	39.7	59.7	34.9	52.5						
		26	34.0	51.1	29.9	45.0						

Properties					
A_g, in.^{2}	8.10	7.34	6.77	5.88	5.15
r_x, in.	2.71	2.70	2.77	2.76	2.79
r_y, in.	1.67	1.65	1.29	1.27	1.22

ASD	LRFD
Ω_c = 1.67	ϕ_c = 0.90

[c] Shape is slender for compression with F_y = 50 ksi.

Note: Heavy line indicates KL/r equal to or greater than 200.

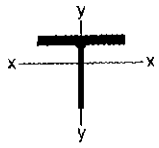

WT8

Table 4-7 (continued)
Available Strength in Axial Compression, kips
WT-Shapes

F_y = 50 ksi

Shape			WT8×											
lb/ft			50		44.5		38.5[c]		33.5[c]		28.5[c]		25[c]	
Design			P_n/Ω_c ASD	$\phi_c P_n$ LRFD	P_n/Ω_c ASD	$\phi_c P_n$ LRFD	P_n/Ω_c ASD	$\phi_c P_n$ LRFD	P_n/Ω_c ASD	$\phi_c P_n$ LRFD	P_n/Ω_c ASD	$\phi_c P_n$ LRFD	P_n/Ω_c ASD	$\phi_c P_n$ LRFD
Effective length, KL (ft), with respect to indicated axis	X-X Axis	0	440	662	392	590	334	501	252	379	236	355	182	273
		10	359	540	320	481	271	408	210	316	199	299	156	235
		12	329	494	292	439	248	372	194	291	185	278	146	220
		14	296	445	263	395	222	334	176	265	169	254	135	203
		16	262	394	232	349	196	295	158	237	153	229	124	186
		18	228	343	202	304	171	256	139	209	136	204	112	168
		20	196	294	173	260	146	219	121	182	119	180	99.5	150
		22	165	248	146	219	122	184	104	156	104	156	87.7	132
		24	138	208	122	184	103	154	87.6	132	88.3	133	76.4	115
		26	118	177	104	157	87.5	132	74.7	112	75.2	113	65.5	98.5
		28	102	153	89.9	135	75.5	113	64.4	96.7	64.9	97.5	56.5	84.9
		30	88.6	133	78.3	118	65.8	98.8	56.1	84.3	56.5	84.9	49.2	74.0
		32	77.9	117	68.8	103	57.8	86.9	49.3	74.1	49.7	74.7	43.3	65.0
		34	69.0	104	61.0	91.6	51.2	76.9	43.7	65.6	44.0	66.1	38.3	57.6
		36	61.5	92.5	54.4	81.7	45.7	68.6	38.9	58.5	39.2	59.0	34.2	51.4
		40									31.8	47.8	27.7	41.6
	Y-Y Axis	0	440	661	392	589	334	501	252	379	236	355	182	273
		10	362	545	319	480	269	404	204	306	153	230	122	184
		12	337	507	297	447	252	379	194	292	130	195	106	159
		14	310	466	273	410	232	349	182	273	106	160	88.7	133
		16	281	423	247	372	210	316	167	251	84.4	127	72.4	109
		18	252	378	221	332	188	282	151	227	67.2	101	57.9	87.0
		20	222	334	195	293	165	248	135	203	54.8	82.3	47.2	71.0
		22	193	291	170	255	143	215	119	179	45.5	68.3	39.2	59.0
		24	166	249	145	218	122	184	104	157	38.3	57.6	33.1	49.8
		26	142	213	124	186	105	157	89.6	135	32.7	49.2	28.3	42.5
		28	122	184	107	161	90.4	136	77.5	117				
		30	107	160	93.4	140	78.9	119	67.7	102				
		32	93.8	141	82.2	123	69.5	104	59.7	89.7				
		34	83.2	125	72.8	109	61.6	92.6	52.9	79.6				
		36	74.2	112	65.0	97.7	55.0	82.7	47.3	71.1				
		40	60.2	90.5	52.7	79.3	44.7	67.1	38.4	57.7				
Properties														
A_g, in.^{2}			14.7		13.1		11.3		9.81		8.39		7.37	
r_x, in.			2.28		2.27		2.24		2.22		2.41		2.40	
r_y, in.			2.51		2.49		2.47		2.46		1.60		1.59	

ASD	LRFD
$\Omega_c = 1.67$	$\phi_c = 0.90$

[c] Shape is slender for compression with F_y = 50 ksi.
Note: Heavy line indicates KL/r equal to or greater than 200.

Table 4-7 (continued)

Available Strength in Axial Compression, kips

WT-Shapes

F_y = 50 ksi

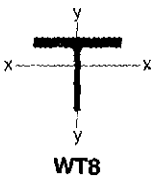

WT8

Shape			WT8×									
lb/ft			22.5[c]		20[c]		18[c]		15.5[c]		13[c]	
Design			P_n/Ω_c ASD	$\phi_c P_n$ LRFD	P_n/Ω_c ASD	$\phi_c P_n$ LRFD	P_n/Ω_c ASD	$\phi_c P_n$ LRFD	P_n/Ω_c ASD	$\phi_c P_n$ LRFD	P_n/Ω_c ASD	$\phi_c P_n$ LRFD
Effective length, KL (ft), with respect to indicated axis	X-X Axis	0	144	216	102	153	87.6	132	65.4	98.3	46.6	70.1
		10	126	189	91.6	138	79.2	119	60.1	90.4	43.5	65.4
		12	118	178	87.3	131	75.8	114	57.9	87.1	42.2	63.4
		14	111	166	82.5	124	72.0	108	55.5	83.4	40.7	61.1
		16	102	153	77.3	116	67.8	102	52.7	79.3	39.0	58.6
		18	93.2	140	71.8	108	63.3	95.1	49.8	74.9	37.2	55.9
		20	84.2	127	66.0	99.4	58.7	88.2	46.7	70.2	35.2	53.0
		22	75.3	113	60.4	90.8	53.9	81.0	43.5	65.4	33.2	50.0
		24	66.6	100	54.6	82.1	49.2	73.9	40.3	60.6	31.2	46.8
		26	58.3	87.6	49.0	73.7	44.5	66.8	37.1	55.7	29.1	43.7
		28	50.4	75.8	43.6	65.5	39.9	60.0	33.8	50.9	26.9	40.5
		30	43.9	66.0	38.4	57.7	35.5	53.4	30.7	46.1	24.8	37.3
		32	38.6	58.0	33.7	50.7	31.3	47.1	27.7	41.6	22.8	34.2
		34	34.2	51.4	29.9	44.9	27.7	41.7	24.7	37.1	20.8	31.2
		36	30.5	45.8	26.6	40.0	24.7	37.2	22.0	33.1	18.8	28.3
		40					20.0	30.1	17.9	26.8	15.3	23.0
	Y-Y Axis	0	144	216	102	153	87.6	132	65.4	98.3	46.6	70.1
		10	99.0	149	74.4	112	61.4	92.3	41.7	62.7	29.2	43.9
		12	87.1	131	67.3	101	55.8	83.9	35.7	53.7	25.5	38.3
		14	74.5	112	59.4	89.2	49.4	74.3	29.6	44.6	21.6	32.4
		16	62.1	93.3	51.2	77.0	42.7	64.2	23.8	35.7	17.6	26.5
		18	50.3	75.7	43.3	65.1	36.2	54.3	19.1	28.7	14.3	21.5
		20	41.2	61.9	35.8	53.8	29.9	45.0				
		22	34.2	51.5	29.8	44.9	25.0	37.6				
		24	28.9	43.5	25.2	37.9	21.2	31.9				
		26	24.7	37.2	21.6	32.5						
Properties												
A_g, in.^{2}			6.63		5.89		5.29		4.56		3.84	
r_x, in.			2.39		2.37		2.41		2.45		2.47	
r_y, in.			1.57		1.56		1.52		1.17		1.12	

ASD	LRFD
Ω_c = 1.67	ϕ_c = 0.90

[c] Shape is slender for compression with F_y = 50 ksi.

Note: Heavy line indicates KL/r equal to or greater than 200.

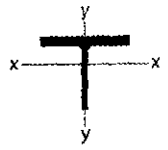

WT7

Table 4-7 (continued)
Available Strength in Axial Compression, kips
WT-Shapes

F_y = 50 ksi

Shape			WT7×											
lb/ft			66		60		54.5		49.5		45		41	
Design			P_n/Ω_c ASD	$\phi_c P_n$ LRFD	P_n/Ω_c ASD	$\phi_c P_n$ LRFD	P_n/Ω_c ASD	$\phi_c P_n$ LRFD	P_n/Ω_c ASD	$\phi_c P_n$ LRFD	P_n/Ω_c ASD	$\phi_c P_n$ LRFD	P_n/Ω_c ASD	$\phi_c P_n$ LRFD
Effective length, KL (ft), with respect to indicated axis	X-X Axis	0	581	873	530	797	479	720	437	657	395	594	359	540
		10	409	614	370	556	330	496	300	450	270	405	264	397
		12	350	526	316	474	280	421	254	381	228	343	231	347
		14	291	438	262	393	231	347	209	313	187	281	197	295
		16	236	355	211	317	184	277	166	250	148	223	163	246
		18	187	281	167	251	145	219	131	197	117	176	132	199
		20	152	228	135	203	118	177	106	160	94.9	143	107	161
		22	125	188	112	168	97.4	146	87.8	132	78.4	118	88.6	133
		24	105	158	93.8	141	81.8	123	73.8	111	65.9	99.1	74.4	112
		26	89.7	135	79.9	120	69.7	105	62.9	94.5	56.2	84.4	63.4	95.3
		28	77.3	116	68.9	104	60.1	90.4					54.7	82.2
		30											47.6	71.6
	Y-Y Axis	0	581	873	530	796	479	720	437	657	395	594	359	540
		10	534	802	485	729	438	658	397	597	357	536	297	446
		12	517	777	470	706	424	637	384	577	345	519	276	415
		14	497	747	452	679	408	612	370	556	332	500	253	380
		16	476	715	432	650	390	586	353	531	318	478	228	343
		18	453	680	411	618	371	557	336	505	302	454	204	306
		20	428	643	388	584	350	526	317	477	286	429	179	269
		22	402	604	365	549	329	494	298	448	268	403	155	234
		24	376	565	341	512	307	461	278	418	250	376	133	199
		26	349	525	316	475	285	428	258	388	232	349	113	170
		28	322	484	292	439	263	395	238	357	214	321	97.7	147
		30	296	444	268	402	241	362	218	327	196	294	85.2	128
		32	270	405	244	367	219	330	198	298	178	268	74.9	113
		34	245	368	221	332	199	299	179	270	161	242	66.4	99.8
		36	220	331	199	298	178	268	161	242	145	217	59.2	89.0
		40	178	268	161	242	145	217	130	196	117	176	48.0	72.2
Properties														
A_g, in.^{2}			19.4		17.7		16.0		14.6		13.2		12.0	
r_x, in.			1.73		1.71		1.68		1.67		1.66		1.85	
r_y, in.			3.76		3.74		3.73		3.71		3.70		2.48	

ASD	LRFD
$\Omega_c = 1.67$	$\phi_c = 0.90$

Note: Heavy line indicates KL/r equal to or greater than 200.

Table 4-7 (continued)

Available Strength in Axial Compression, kips

WT-Shapes

F_y = 50 ksi

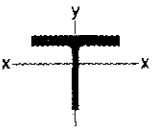

WT7

Shape			WT7×											
lb/ft			37		34		30.5[c]		26.5[c]		24[c]		21.5[c]	
Design			P_n/Ω_c ASD	$\phi_c P_n$ LRFD	P_n/Ω_c ASD	$\phi_c P_n$ LRFD	P_n/Ω_c ASD	$\phi_c P_n$ LRFD	P_n/Ω_c ASD	$\phi_c P_n$ LRFD	P_n/Ω_c ASD	$\phi_c P_n$ LRFD	P_n/Ω_c ASD	$\phi_c P_n$ LRFD
Effective length, KL (ft), with respect to indicated axis	X-X Axis	0	326	491	299	450	260	392	223	336	186	280	146	219
		10	237	357	217	326	190	286	168	252	143	215	115	173
		12	206	310	188	283	165	249	148	223	128	192	104	156
		14	175	263	159	240	140	211	128	192	111	167	92.1	138
		16	145	217	132	198	116	175	108	162	95.2	143	80.0	120
		18	116	175	106	159	93.5	141	88.7	133	79.7	120	68.1	102
		20	94.2	142	85.5	128	75.8	114	71.9	108	65.2	98.0	57.0	85.6
		22	77.9	117	70.7	106	62.6	94.1	59.5	89.4	53.9	81.0	47.1	70.8
		24	65.4	98.3	59.4	89.2	52.6	79.1	50.0	75.1	45.3	68.1	39.6	59.5
		26	55.7	83.8	50.6	76.0	44.8	67.4	42.6	64.0	38.6	58.0	33.7	50.7
		28	48.1	72.02	43.6	65.6	38.7	58.1	36.7	55.2	33.3	50.0	29.1	43.7
		30	41.9	62.9	38.0	57.1	33.7	50.6	32.0	48.1	29.0	43.6	25.3	38.1
	Y-Y Axis	0	326	490	299	450	260	392	223	336	186	280	146	219
		10	269	404	245	368	212	318	166	249	140	211	112	169
		12	250	376	227	342	199	299	148	222	126	189	102	154
		14	229	344	208	313	183	275	128	193	111	166	91.0	137
		16	207	311	188	283	165	249	109	164	95.2	143	79.5	120
		18	185	278	168	252	148	222	90.5	136	80.1	120	68.2	103
		20	163	244	147	221	130	195	73.8	111	66.0	99.2	57.4	86.3
		22	141	212	127	191	113	169	61.2	92.0	54.8	82.3	47.7	71.7
		24	120	181	109	163	96.0	144	51.5	77.5	46.1	69.3	40.2	60.4
		26	103	154	92.6	139	82.0	123	44.0	66.1	39.4	59.2	34.3	51.6
		28	88.7	133	80.0	120	70.9	106	38.0	57.1	34.0	51.1	29.7	44.6
		30	77.3	116	69.7	105	61.8	92.9	33.1	49.8	29.7	44.6	25.9	38.9
		32	68.0	102	61.3	92.2	54.4	81.8	29.1	43.8				
		34	60.3	90.6	54.4	81.7	48.2	72.5						
		36	53.8	80.8	48.5	72.9	43.1	64.7						
		40	43.6	65.5	39.3	59.1	34.9	52.5						
Properties														
A_g, in.^{2}			10.9		10.0		8.96		7.80		7.07		6.31	
r_x, in.			1.82		1.81		1.80		1.88		1.88		1.86	
r_y, in.			2.48		2.46		2.45		1.92		1.91		1.89	

ASD	LRFD
Ω_c = 1.67	ϕ_c = 0.90

[c] Shape is slender for compression with F_y = 50 ksi.
Note: Heavy line indicates KL/r equal to or greater than 200.

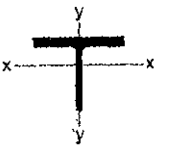

WT7

Table 4-7 (continued)
Available Strength in Axial Compression, kips
WT-Shapes

F_y = 50 ksi

Shape			WT7×									
lb/ft			19[c]		17[c]		15[c]		13[c]		11[c]	
Design			P_n/Ω_c ASD	$\phi_c P_n$ LRFD	P_n/Ω_c ASD	$\phi_c P_n$ LRFD	P_n/Ω_c ASD	$\phi_c P_n$ LRFD	P_n/Ω_c ASD	$\phi_c P_n$ LRFD	P_n/Ω_c ASD	$\phi_c P_n$ LRFD
Effective length, KL (ft), with respect to indicated axis	X-X Axis	0	127	190	99.9	150	80.9	122	61.9	93.0	43.6	65.6
		10	105	157	84.3	127	69.6	105	54.6	82.0	39.4	59.1
		12	96.1	144	78.3	118	65.1	97.9	51.6	77.6	37.6	56.5
		14	87.0	131	71.7	108	60.2	90.5	48.4	72.7	35.6	53.6
		16	77.5	117	64.8	97.4	55.1	82.7	44.9	67.4	33.5	50.4
		18	68.0	102	57.8	86.9	49.7	74.7	41.2	61.9	31.2	47.0
		20	58.8	88.4	50.8	76.4	44.4	66.7	37.4	56.2	28.9	43.4
		22	50.1	75.2	44.1	66.3	39.1	58.8	33.7	50.6	26.5	39.8
		24	42.1	63.2	37.7	56.7	34.1	51.2	30.0	45.1	24.1	36.2
		26	35.9	53.9	32.1	48.3	29.2	44.0	26.4	39.7	21.7	32.7
		28	30.9	46.5	27.7	41.6	25.2	37.9	23.0	34.6	19.4	29.2
		30	26.9	40.5	24.1	36.3	22.0	33.0	20.1	30.2	17.3	25.9
		32	23.7	35.6	21.2	31.9	19.3	29.0	17.6	26.5	15.2	22.8
		34	21.0	31.5	18.8	28.2	17.1	25.7	15.6	23.5	13.4	20.2
	Y-Y Axis	0	127	190	99.9	150	80.9	122	61.9	93.0	43.6	65.6
		10	86.5	130	69.5	104	55.2	82.9	35.8	53.8	25.7	38.6
		12	75.2	113	61.5	92.4	49.3	74.1	29.0	43.6	21.4	32.2
		14	63.4	95.4	52.8	79.4	42.7	64.2	22.6	33.9	17.1	25.8
		16	52.1	78.3	44.3	66.5	36.1	54.2	17.5	26.4	13.4	20.2
		18	41.8	62.8	36.1	54.2	29.7	44.6	14.0	21.0		
		20	34.1	51.2	29.5	44.3	24.4	36.6				
		22	28.3	42.5	24.5	36.9	20.3	30.5				
		24	23.9	35.9	20.7	31.1	17.2	25.9				
Properties												
A_g, in.^{2}			5.58		5.00		4.42		3.85		3.25	
r_x, in.			2.04		2.04		2.07		2.12		2.14	
r_y, in.			1.55		1.53		1.49		1.08		1.04	
ASD			LRFD		[c] Shape is slender for compression with F_y = 50 ksi.							
Ω_c = 1.67			ϕ_c = 0.90		Note: Heavy line indicates KL/r equal to or greater than 200.							

Table 4-7 (continued)
Available Strength in Axial Compression, kips
WT-Shapes

$F_y = 50$ ksi

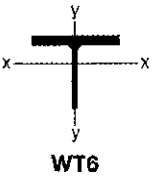

WT6

Shape			WT6×											
lb/ft			29		26.5		25		22.5		20[c]		17.5[c]	
Design			P_n/Ω_c ASD	$\phi_c P_n$ LRFD	P_n/Ω_c ASD	$\phi_c P_n$ LRFD	P_n/Ω_c ASD	$\phi_c P_n$ LRFD	P_n/Ω_c ASD	$\phi_c P_n$ LRFD	P_n/Ω_c ASD	$\phi_c P_n$ LRFD	P_n/Ω_c ASD	$\phi_c P_n$ LRFD
Effective length, KL (ft), with respect to indicated axis	X-X Axis	0	255	383	233	350	219	329	196	295	155	233	132	199
		4	237	356	216	325	205	308	183	276	146	219	126	190
		6	216	324	197	296	188	283	169	254	135	203	119	179
		8	189	284	173	261	168	252	150	226	121	183	110	165
		10	160	240	147	221	145	218	129	194	106	159	98.9	149
		12	130	195	120	180	121	182	108	162	89.8	135	87.0	131
		14	102	153	94.2	142	97.6	147	86.8	130	73.8	111	74.8	112
		16	78.2	117	72.3	109	76.2	115	67.6	102	58.7	88.2	62.9	94.5
		18	61.8	92.8	57.1	85.9	60.2	90.5	53.4	80.3	46.4	69.7	51.6	77.6
		20	50.0	75.2	46.3	69.6	48.8	73.3	43.3	65.0	37.6	56.5	41.8	62.8
		22	41.3	62.1	38.3	57.5	40.3	60.6	35.8	53.8	31.0	46.7	34.5	51.9
		24	34.7	52.2	32.1	48.3	33.9	50.9	30.1	45.2	26.1	39.2	29.0	43.6
		26					28.9	43.4	25.6	38.5	22.2	33.4	24.7	37.2
		28											21.3	32.0
	Y-Y Axis	0	255	383	233	350	219	328	196	295	155	233	132	199
		4	242	364	219	329	202	304	170	255	133	200	113	169
		6	235	353	212	318	192	289	167	251	131	197	108	163
		8	224	337	202	304	178	268	159	239	126	190	99.4	149
		10	211	318	191	287	162	244	145	218	117	176	87.4	131
		12	197	296	177	267	144	217	129	194	106	159	74.2	112
		14	181	272	163	245	125	188	112	168	93.4	140	61.1	91.8
		16	164	246	147	221	107	160	95.0	143	80.6	121	48.6	73.1
		18	147	220	131	198	88.8	133	78.8	118	68.2	102	38.7	58.1
		20	129	194	116	174	72.5	109	64.2	96.5	56.4	84.8	31.4	47.3
		22	113	169	100	151	60.0	90.2	53.2	79.9	46.8	70.3	26.1	39.2
		24	96.5	145	85.8	129	50.5	75.9	44.8	67.3	39.4	59.2	22.0	33.0
		26	82.3	124	73.2	110	43.1	64.7	38.2	57.4	33.6	50.5		
		28	71.1	107	63.2	95.1	37.2	55.8	33.0	49.6	29.0	43.6		
		30	62.0	93.1	55.1	82.9	32.4	48.7	28.8	43.2	25.3	38.0		
		32	54.5	81.9	48.5	72.9	28.5	42.8	25.3	38.0	22.3	33.5		
Properties														
A_g, in.^{2}			8.52		7.78		7.30		6.56		5.84		5.17	
r_x, in.			1.50		1.51		1.60		1.59		1.57		1.76	
r_y, in.			2.51		2.48		1.96		1.95		1.94		1.54	

ASD	LRFD
$\Omega_c = 1.67$	$\phi_c = 0.90$

[c] Shape is slender for compression with $F_y = 50$ ksi.
Note: Heavy line indicates KL/r equal to or greater than 200.

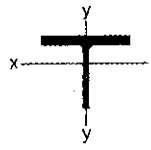

WT6

Table 4-7 (continued)
Available Strength in Axial Compression, kips
WT-Shapes

F_y = 50 ksi

Shape			WT6×											
lb/ft			15[c]		13[c]		11[c]		9.5[c]		8[c]		7[c]	
Design			P_n/Ω_c ASD	$\phi_c P_n$ LRFD	P_n/Ω_c ASD	$\phi_c P_n$ LRFD	P_n/Ω_c ASD	$\phi_c P_n$ LRFD	P_n/Ω_c ASD	$\phi_c P_n$ LRFD	P_n/Ω_c ASD	$\phi_c P_n$ LRFD	P_n/Ω_c ASD	$\phi_c P_n$ LRFD
Effective length, KL (ft), with respect to indicated axis	X-X Axis	0	93.1	140	64.7	97.3	68.6	103	49.9	75.0	37.9	57.0	28.1	42.2
		4	89.6	135	62.7	94.3	66.4	99.7	48.5	72.9	37.0	55.6	27.5	41.4
		6	85.3	128	60.4	90.7	63.7	95.7	46.8	70.4	35.9	54.0	26.8	40.3
		8	79.7	120	57.2	85.9	60.1	90.3	44.6	67.0	34.4	51.7	25.9	38.9
		10	73.0	110	53.3	80.1	55.8	83.9	41.9	63.0	32.5	48.9	24.7	37.1
		12	65.6	98.6	48.9	73.5	51.0	76.6	38.8	58.3	30.4	45.7	23.3	35.1
		14	57.8	86.9	44.2	66.4	45.8	68.8	35.5	53.3	28.1	42.2	21.8	32.8
		16	50.0	75.1	39.3	59.1	40.5	60.8	31.9	48.0	25.6	38.5	20.2	30.4
		18	42.4	63.7	34.5	51.8	35.2	52.8	28.4	42.6	23.1	34.7	18.5	27.8
		20	35.2	52.9	29.7	44.7	30.1	45.2	24.9	37.4	20.5	30.9	16.8	25.2
		22	29.1	43.7	25.2	37.9	25.2	37.9	21.5	32.3	18.1	27.1	15.1	22.6
		24	24.4	36.7	21.2	31.9	21.2	31.9	18.3	27.4	15.7	23.6	13.4	20.1
		26	20.8	31.3	18.1	27.2	18.1	27.1	15.6	23.4	13.4	20.2	11.8	17.7
		28	17.9	27.0	15.6	23.4	15.6	23.4	13.4	20.2	11.6	17.4	10.2	15.3
		30					13.6	20.4	11.7	17.6	10.1	15.2	8.89	13.4
		32									8.87	13.3	7.82	11.7
	Y-Y Axis	0	93.1	140	64.7	97.3	68.6	103	49.9	75.0	37.9	57.0	28.1	42.2
		4	78.1	117	53.9	81.0	52.1	78.3	37.0	55.6	25.6	38.5	18.6	27.9
		6	76.1	114	53.0	79.6	43.5	65.4	31.9	47.9	22.3	33.5	16.5	24.9
		8	71.5	107	50.8	76.4	32.9	49.4	25.0	37.5	17.6	26.5	13.6	20.4
		10	64.5	97.0	47.2	70.9	22.8	34.3	17.9	27.0	12.7	19.2	10.2	15.3
		12	56.4	84.7	42.5	63.8	16.2	24.3	12.8	19.3	9.28	14.0	7.54	11.3
		14	47.8	71.9	37.2	56.0	12.0	18.0						
		16	39.5	59.4	31.9	48.0								
		18	31.8	47.8	26.8	40.2								
		20	25.9	38.9	22.0	33.1								
		22	21.5	32.3	18.3	27.5								
		24	18.1	27.2	15.4	23.2								
Properties														
A_g, in.^{2}			4.40		3.82		3.24		2.79		2.36		2.08	
r_x, in.			1.75		1.75		1.90		1.90		1.92		1.92	
r_y, in.			1.52		1.51		0.847		0.821		0.773		0.753	

ASD	LRFD
Ω_c = 1.67	ϕ_c = 0.90

[c] Shape is slender for compression with F_y = 50 ksi.
Note: Heavy line indicates KL/r equal to or greater than 200.

Table 4-7 (continued)

Available Strength in Axial Compression, kips

WT-Shapes

F_y = 50 ksi

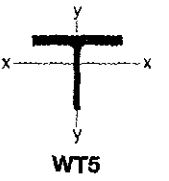

WT5

Shape			WT5×									
lb/ft			22.5		19.5		16.5		15		13[c]	
Design			P_n/Ω_c ASD	$\phi_c P_n$ LRFD	P_n/Ω_c ASD	$\phi_c P_n$ LRFD	P_n/Ω_c ASD	$\phi_c P_n$ LRFD	P_n/Ω_c ASD	$\phi_c P_n$ LRFD	P_n/Ω_c ASD	$\phi_c P_n$ LRFD
Effective length, KL (ft), with respect to indicated axis	X-X Axis	0	199	298	172	258	145	218	132	199	103	154
		4	178	267	154	231	131	196	122	184	95.4	143
		6	155	233	134	202	114	172	111	166	87.1	131
		8	128	192	111	166	95.0	143	96.0	144	76.6	115
		10	100	150	86.5	130	74.8	112	80.2	121	65.0	97.7
		12	73.9	111	63.9	96.0	55.8	83.9	64.3	96.7	53.2	79.9
		14	54.3	81.6	46.9	70.5	41.0	61.6	49.5	74.4	41.9	63.0
		16	41.6	62.5	35.9	54.0	31.4	47.2	37.9	57.0	32.2	48.4
		18	32.8	49.4	28.4	42.7	24.8	37.3	29.9	45.0	25.5	38.3
		20	26.6	40.0	23.0	34.6	20.1	30.2	24.3	36.4	20.6	31.0
		22							20.0	30.1	17.0	25.6
		24							16.8	25.3	14.3	21.5
	Y-Y Axis	0	199	298	172	258	145	218	132	199	103	154
		4	187	281	160	241	133	199	115	173	86.7	130
		6	178	267	152	229	126	189	103	155	81.3	122
		8	166	249	141	213	117	176	89.0	134	71.5	107
		10	151	227	129	193	106	160	73.3	110	59.7	89.8
		12	135	203	115	172	94.4	142	57.7	86.7	47.8	71.8
		14	118	177	99.9	150	82.0	123	43.5	65.3	36.6	55.0
		16	101	152	85.3	128	69.6	105	33.4	50.2	28.2	42.4
		18	84.8	127	71.2	107	57.8	86.9	26.5	39.8	22.4	33.6
		20	69.5	105	58.2	87.5	47.1	70.8	21.5	32.3	18.2	27.3
		22	57.5	86.4	48.2	72.4	39.0	58.6	17.8	26.7	15.1	22.6
		24	48.4	72.7	40.5	60.9	32.8	49.3				
		26	41.2	62.0	34.5	51.9	28.0	42.1				
		28	35.6	53.5	29.8	44.8	24.2	36.3				
		30	31.0	46.6	26.0	39.0	21.1	31.7				
		32	27.3	41.0	22.8	34.3	18.5	27.8				
Properties												
A_g, in.^{2}			6.63		5.73		4.85		4.42		3.81	
r_x, in.			1.24		1.24		1.26		1.45		1.44	
r_y, in.			2.01		1.98		1.94		1.37		1.36	

ASD	LRFD
Ω_c = 1.67	ϕ_c = 0.90

[c] Shape is slender for compression with F_y = 50 ksi.
Note: Heavy line indicates KL/r equal to or greater than 200.

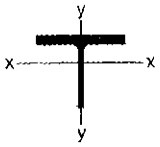

WT5

Table 4-7 (continued)
Available Strength in Axial Compression, kips
WT-Shapes

$F_y = 50$ ksi

Shape			WT5×									
lb/ft			11[c]		9.5[c]		8.5[c]		7.5[c]		6[c]	
Design			P_n/Ω_c ASD	$\phi_c P_n$ LRFD	P_n/Ω_c ASD	$\phi_c P_n$ LRFD	P_n/Ω_c ASD	$\phi_c P_n$ LRFD	P_n/Ω_c ASD	$\phi_c P_n$ LRFD	P_n/Ω_c ASD	$\phi_c P_n$ LRFD
Effective length, KL (ft), with respect to indicated axis	X-X Axis	0	80.9	122	73.2	110	62.8	94.4	53.5	80.5	31.4	47.2
		4	75.7	114	68.8	103	59.3	89.1	50.7	76.1	30.1	45.3
		6	69.8	105	63.7	95.7	55.1	82.8	47.3	71.0	28.6	43.0
		8	62.2	93.4	57.2	85.9	49.8	74.8	42.9	64.5	26.7	40.1
		10	53.6	80.5	49.7	74.8	43.7	65.7	37.9	56.9	24.4	36.6
		12	44.7	67.2	42.0	63.1	37.2	56.0	32.5	48.9	21.8	32.8
		14	36.1	54.2	34.3	51.6	30.8	46.3	27.2	40.9	19.1	28.7
		16	28.2	42.3	27.2	40.8	24.8	37.3	22.1	33.2	16.4	24.7
		18	22.2	33.4	21.5	32.3	19.6	29.5	17.5	26.4	13.8	20.8
		20	18.0	27.1	17.4	26.1	15.9	23.9	14.2	21.4	11.4	17.1
		22	14.9	22.4	14.4	21.6	13.1	19.7	11.7	17.7	9.41	14.1
		24	12.5	18.8	12.1	18.2	11.0	16.6	9.87	14.8	7.91	11.9
		26					9.39	14.1	8.41	12.6	6.74	10.1
	Y-Y Axis	0	80.9	122	73.2	110	62.8	94.4	53.5	80.5	31.4	47.2
		4	65.1	97.8	55.5	83.5	45.3	68.0	35.7	53.7	20.8	31.3
		6	62.0	93.2	44.7	67.2	36.6	55.0	29.0	43.5	18.0	27.1
		8	55.5	83.4	32.2	48.4	26.2	39.3	20.6	30.9	14.0	21.1
		10	46.9	70.5	21.5	32.3	17.5	26.3	13.9	20.9	9.99	15.0
		12	37.9	57.0	15.1	22.7	12.4	18.6	9.93	14.9	7.25	10.9
		14	29.3	44.1	11.2	16.8	9.21	13.8				
		16	22.7	34.1								
		18	18.0	27.1								
		20	14.7	22.1								
		22	12.2	18.3								
Properties												
A_g, in.^{2}			3.24		2.81		2.50		2.21		1.77	
r_x, in.			1.46		1.54		1.56		1.57		1.57	
r_y, in.			1.33		0.874		0.844		0.810		0.785	
ASD			LRFD		[c] Shape is slender for compression with $F_y = 50$ ksi. Note: Heavy line indicates KL/r equal to or greater than 200.							
$\Omega_c = 1.67$			$\phi_c = 0.90$									

Table 4-7 (continued)

Available Strength in Axial Compression, kips

WT-Shapes

F_y = 50 ksi

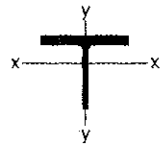

WT4

Shape			WT4×									
lb/ft			33.5		29		24		20		17.5	
Design			P_n/Ω_c ASD	$\phi_c P_n$ LRFD	P_n/Ω_c ASD	$\phi_c P_n$ LRFD	P_n/Ω_c ASD	$\phi_c P_n$ LRFD	P_n/Ω_c ASD	$\phi_c P_n$ LRFD	P_n/Ω_c ASD	$\phi_c P_n$ LRFD
Effective length, KL (ft), with respect to indicated axis	X-X Axis	0	295	443	256	384	211	317	176	264	154	231
		4	253	380	218	328	177	267	148	222	129	193
		6	209	314	179	269	143	215	119	179	103	154
		8	160	240	135	204	106	159	88.1	132	75.0	113
		10	113	170	94.6	142	71.5	108	59.8	89.9	50.3	75.6
		12	78.6	118	65.7	98.7	49.7	74.7	41.5	62.4	34.9	52.5
		14	57.8	86.8	48.2	72.5	36.5	54.9	30.5	45.9	25.6	38.6
		16	44.2	66.5	36.9	55.5	27.9	42.0	23.4	35.1	19.6	29.5
	Y-Y Axis	0	295	443	256	384	211	317	176	264	154	231
		4	283	425	245	368	202	303	167	251	145	219
		6	270	405	233	351	192	289	159	238	138	208
		8	253	380	218	328	180	270	148	222	129	194
		10	232	349	200	301	165	247	135	203	118	177
		12	210	315	181	271	148	222	121	182	105	158
		14	186	279	160	240	130	196	106	160	92.5	139
		16	161	243	138	208	113	170	91.4	137	79.4	119
		18	138	207	118	177	95.7	144	77.1	116	66.9	100
		20	115	173	98.1	147	79.4	119	63.5	95.4	55.0	82.7
		22	95.3	143	81.1	122	65.6	98.7	52.5	78.9	45.5	68.4
		24	80.1	120	68.2	102	55.2	82.9	44.2	66.4	38.3	57.5
		26	68.2	103	58.1	87.3	47.0	70.7	37.6	56.6	32.6	49.0
		28	58.8	88.4	50.1	75.3	40.6	61.0	32.5	48.8	28.1	42.3
		30	51.3	77.0	43.6	65.6	35.3	53.1	28.3	42.5	24.5	36.9
		32	45.1	67.7	38.4	57.7	31.1	46.7	24.9	37.4	21.6	32.4
Properties												
A_g, in.^{2}			9.84		8.54		7.05		5.87		5.14	
r_x, in.			1.05		1.03		0.986		0.988		0.968	
r_y, in.			2.12		2.10		2.08		2.04		2.03	
ASD			LRFD		Note: Heavy line indicates KL/r equal to or greater than 200.							
Ω_c = 1.67			ϕ_c = 0.90									

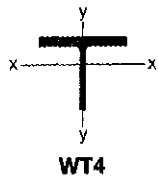

WT4

Table 4-7 (continued)
Available Strength in Axial Compression, kips
WT-Shapes

F_y = 50 ksi

Shape			WT4×							
lb/ft			15.5		14		12		10.5	
Design			P_n/Ω_c ASD	$\phi_c P_n$ LRFD	P_n/Ω_c ASD	$\phi_c P_n$ LRFD	P_n/Ω_c ASD	$\phi_c P_n$ LRFD	P_n/Ω_c ASD	$\phi_c P_n$ LRFD
Effective length, KL (ft), with respect to indicated axis	X-X Axis	0	137	205	123	185	106	159	92.2	139
		4	114	171	105	157	89.5	135	80.6	121
		6	91.2	137	85.1	128	72.5	109	68.2	102
		8	66.6	100	63.7	95.8	54.0	81.1	53.9	81.0
		10	44.7	67.2	43.9	65.9	36.9	55.4	39.8	59.9
		12	31.0	46.6	30.5	45.8	25.6	38.5	28.0	42.1
		14	22.8	34.3	22.4	33.6	18.8	28.3	20.6	30.9
		16	17.5	26.2	17.1	25.8	14.4	21.7	15.8	23.7
		18							12.4	18.7
	Y-Y Axis	0	137	205	123	185	106	159	92.2	139
		4	128	192	113	170	96.4	145	79.3	119
		6	122	183	105	157	89.2	134	69.9	105
		8	114	171	93.8	141	79.9	120	58.5	87.9
		10	104	156	81.4	122	69.3	104	46.4	69.8
		12	92.8	140	68.4	103	58.2	87.4	34.9	52.4
		14	81.4	122	55.7	83.7	47.2	71.0	25.7	38.7
		16	69.8	105	43.8	65.8	37.1	55.7	19.8	29.7
		18	58.7	88.2	34.6	52.1	29.4	44.1	15.6	23.5
		20	48.2	72.5	28.1	42.2	23.8	35.8	12.7	19.1
		22	39.9	60.0	23.2	34.9	19.7	29.6		
		24	33.6	50.5	19.5	29.4	16.6	24.9		
		26	28.6	43.0	16.7	25.0	14.1	21.2		
		28	24.7	37.1						
		30	21.5	32.4						
		32	18.9	28.4						
Properties										
A_g, in.^{2}			4.56		4.12		3.54		3.08	
r_x, in.			0.969		1.01		0.999		1.12	
r_y, in.			2.02		1.62		1.61		1.26	
ASD			LRFD		Note: Heavy line indicates KL/r equal to or greater than 200.					
Ω_c = 1.67			ϕ_c = 0.90							

Table 4-7 (continued)
Available Strength in Axial Compression, kips
WT-Shapes

F_y = 50 ksi

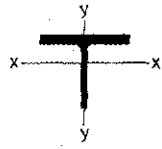

WT4

Shape			WT4×							
lb/ft			9		7.5		6.5		5[c]	
Design			P_n/Ω_c ASD	$\phi_c P_n$ LRFD	P_n/Ω_c ASD	$\phi_c P_n$ LRFD	P_n/Ω_c ASD	$\phi_c P_n$ LRFD	P_n/Ω_c ASD	$\phi_c P_n$ LRFD
Effective length, KL (ft), with respect to indicated axis	X-X Axis	0	78.7	118	66.5	99.9	57.5	86.4	32.5	48.8
		4	69.2	104	59.4	89.2	51.4	77.3	29.8	44.8
		6	58.8	88.4	51.5	77.4	44.7	67.3	26.8	40.3
		8	46.9	70.6	42.3	63.5	36.8	55.3	23.1	34.7
		10	35.0	52.6	32.8	49.2	28.7	43.1	19.0	28.6
		12	24.8	37.2	24.0	36.0	21.1	31.6	15.0	22.6
		14	18.2	27.4	17.6	26.4	15.5	23.3	11.3	17.1
		16	13.9	20.9	13.5	20.2	11.8	17.8	8.69	13.1
		18	11.0	16.5	10.6	16.0	9.36	14.1	6.87	10.3
		20			8.62	13.0	7.58	11.4	5.56	8.36
	Y-Y Axis	0	78.7	118	66.5	99.9	57.5	86.4	32.5	48.8
		4	65.2	98.0	48.1	72.3	38.5	57.8	23.0	34.5
		6	57.5	86.4	37.6	56.6	30.1	45.2	19.5	29.3
		8	48.0	72.1	26.3	39.6	20.7	31.2	14.7	22.1
		10	37.9	56.9	17.3	25.9	13.6	20.5	10.1	15.2
		12	28.1	42.3	12.1	18.2	9.60	14.4	7.21	10.8
		14	20.8	31.3	8.94	13.4	7.11	10.7	5.37	8.07
		16	16.0	24.1						
		18	12.7	19.1						
		20	10.3	15.5						
Properties										
A_g, in.^{2}			2.63		2.22		1.92		1.48	
r_x, in.			1.14		1.22		1.23		1.20	
r_y, in.			1.23		0.876		0.843		0.840	

ASD	LRFD
$\Omega_c = 1.67$	$\phi_c = 0.90$

[c] Shape is slender for compression with F_y = 50 ksi.
Note: Heavy line indicates KL/r equal to or greater than 200.

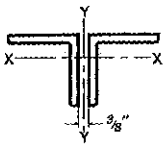

2L8

Table 4-8
Available Strength in Axial Compression, kips

F_y = 36 ksi

Double Angles—Equal Legs

Shape		2L8×8×												No. of connectors[a]
		1 1/8		1		7/8		3/4		5/8		9/16[c]		
lb/ft		114		102		90.0		77.8		65.4		59.2		
Design		P_n/Ω_c ASD	$\phi_c P_n$ LRFD	P_n/Ω_c ASD	$\phi_c P_n$ LRFD	P_n/Ω_c ASD	$\phi_c P_n$ LRFD	P_n/Ω_c ASD	$\phi_c P_n$ LRFD	P_n/Ω_c ASD	$\phi_c P_n$ LRFD	P_n/Ω_c ASD	$\phi_c P_n$ LRFD	
Effective length, KL (ft), with respect to indicated axis — X-X Axis	0	724	1090	651	978	573	862	496	745	417	627	362	544	
	2	721	1080	648	973	571	857	493	741	415	624	360	541	
	4	709	1070	638	959	562	845	486	730	409	614	355	534	
	6	691	1040	622	934	548	824	474	712	399	600	347	521	
	8	666	1000	600	901	529	795	458	688	385	579	336	504	
	10	636	955	573	861	505	760	437	657	369	554	322	484	
	12	600	902	541	813	478	719	414	622	349	525	306	459	
	14	561	843	506	761	448	673	388	583	328	493	287	432	
	16	519	779	469	704	415	624	360	541	304	458	268	403	
	18	475	713	429	646	381	572	330	497	280	421	247	372	
	20	430	646	390	586	346	520	300	451	255	383	226	340	b
	22	385	579	350	526	311	468	270	406	230	346	205	308	
	24	342	513	311	467	277	416	241	362	205	309	184	277	
	26	300	451	273	411	244	367	213	320	182	273	164	246	
	28	260	391	237	357	213	320	185	279	159	239	144	217	
	30	226	340	207	311	185	278	161	243	138	208	126	189	
	32	199	299	182	273	163	245	142	213	122	183	111	166	
	34	176	265	161	242	144	217	126	189	108	162	98.0	147	
	36	157	236	144	216	129	193	112	168	96.1	144	87.4	131	
	38	141	212	129	194	115	173	101	151	86.2	130	78.4	118	
	40	127	191	116	175	104	157	90.8	136	77.8	117	70.8	106	
Y-Y Axis	0	724	1090	651	978	573	862	496	745	417	627	362	544	
	6	689	1040	613	922	532	800	449	674	334	502	280	420	
	9	671	1010	597	898	518	779	437	657	332	499	278	418	
	12	647	972	576	865	500	751	422	634	328	493	275	413	
	15	616	927	549	825	477	716	403	605	321	483	270	406	
	18	582	874	518	778	438	658	371	557	304	456	258	388	2
	21	532	799	473	711	405	609	343	515	284	426	243	365	
	24	488	733	434	652	370	556	313	471	260	390	225	337	
	27	442	664	393	591	333	501	282	424	234	352	204	306	
	30	396	595	352	529	296	446	251	378	208	312	182	273	
	33	351	527	312	468	260	391	221	332	182	273	160	241	
	36	307	461	272	410	237	356	200	301	165	247	139	209	
	39	265	398	235	353	204	307	172	259	142	213	126	189	
	42	229	344	203	305	176	265	149	224	123	185	109	164	
	45	199	300	177	266	154	231	130	196	108	162	95.8	144	
	48	175	264	156	234	135	204	115	173	94.9	143	84.6	127	3
	51	156	234	138	208	120	181	102	153	82.3	127	75.2	113	
	54	139	209	123	185	107	161	91.0	137	75.4	113	67.3	101	
	57	125	187	111	166	96.4	145	81.8	123	67.8	102	60.6	91.1	
Properties of 2 angles—3/8 in. back to back														
A_g, in.^{2}		33.6		30.2		26.6		23.0		19.4		17.5		
r_x, in.		2.41		2.43		2.45		2.46		2.48		2.49		
r_y, in.		3.54		3.52		3.50		3.47		3.45		3.44		
Properties of single angle														
r_z, in.		1.56		1.56		1.57		1.57		1.58		1.58		

ASD	LRFD
$\Omega_c = 1.67$	$\phi_c = 0.90$

[a] For Y-Y axis, welded or pretensioned bolted intermediate connectors must be used.
[b] For required number of intermediate connectors, see the discussion of Table 4-8.
[c] Shape is slender for compression with F_y = 36 ksi.

Table 4-8 (continued)

Available Strength in Axial Compression, kips

Double Angles—Equal Legs

F_y = 36 ksi

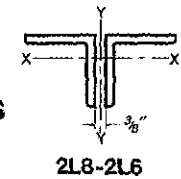

2L8-2L6

Shape			2L8×8×		No. of connectors[a]	2L6×6×								No. of connectors[a]
			1/2[c]			1		7/8		3/4		5/8		
lb/ft			52.8			74.8		66.2		57.4		48.4		
Design			P_n/Ω_c	$\phi_c P_n$		P_n/Ω_c	$\phi_c P_n$	P_n/Ω_c	$\phi_c P_n$	P_n/Ω_c	$\phi_c P_n$	P_n/Ω_c	$\phi_c P_n$	
			ASD	LRFD		ASD	LRFD	ASD	LRFD	ASD	LRFD	ASD	LRFD	
Effective length, KL (ft), with respect to indicated axis	X-X Axis	0	309	464		474	713	420	632	364	548	308	463	
		2	307	462		470	706	416	626	361	543	306	459	
		4	303	456		457	686	405	609	351	528	297	447	
		6	297	446		436	655	387	581	335	504	284	427	
		8	287	432		408	613	362	545	315	473	267	401	
		10	276	415		374	563	334	501	290	436	246	370	
		12	263	395		337	507	301	453	262	394	223	336	
		14	248	373		298	448	267	401	233	350	199	299	
		16	232	349		259	389	232	349	203	305	174	261	
		18	215	323		220	331	199	299	174	261	149	224	
		20	198	297	b	184	276	167	250	146	219	125	189	b
		22	180	270		152	228	138	207	121	181	104	157	
		24	162	244		128	192	116	174	101	152	87.7	132	
		26	145	218		109	164	98.6	148	86.4	130	74.8	112	
		28	129	194		93.8	141	85.1	128	74.5	112	64.5	96.9	
		30	113	170				74.1	111	64.9	97.6	56.1	84.4	
		32	99.2	149										
		34	87.9	132										
		36	78.4	118										
		38	70.4	106										
		40	63.5	95.4										
	Y-Y Axis	0	309	464		474	713	420	632	364	548	308	463	
		6	227	341		449	674	395	593	338	508	280	421	
		9	225	339		429	644	377	567	323	485	268	402	
		12	223	336		402	605	354	532	303	455	251	377	
		15	220	331		371	558	326	490	279	419	231	347	
		18	212	319	2	327	491	287	431	245	368	203	306	
		21	202	304		287	432	252	379	215	323	178	268	
		24	189	284		248	372	217	326	184	277	153	230	3
		27	174	261		209	314	183	275	155	233	129	194	
		30	156	235		173	260	151	227	128	192	106	159	
		33	139	209		143	215	125	188	106	159	87.8	132	
		36	122	183		120	181	105	158	89.0	134	74.0	111	
		39	110	166		103	154	89.6	135	75.9	114	63.1	94.9	
		42	96.2	145		88.5	133	77.3	116	65.5	98.5	54.5	82.0	
		45	84.5	127		77.1	116	67.4	101					
		48	74.8	112	3									
		51	66.6	100										
		54	59.7	89.7										
		57	53.8	80.8										
Properties of 2 angles—3/8 in. back to back														
A_g, in.^{2}			15.7			22.0		19.5		16.9		14.3		
r_x, in.			2.49			1.79		1.81		1.82		1.84		
r_y, in.			3.43			2.72		2.70		2.67		2.65		
Properties of single angle														
r_z, in.			1.59			1.17		1.17		1.17		1.17		

ASD	LRFD
Ω_c = 1.67	ϕ_c = 0.90

[a] For Y-Y axis, welded or pretensioned bolted intermediate connectors must be used.
[b] For required number of intermediate connectors, see the discussion of Table 4-8.
[c] Shape is slender for compression with F_y = 36 ksi.
Note: Heavy line indicates KL/r equal to or greater than 200.

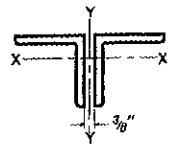

2L6

Table 4-8 (continued)
Available Strength in Axial Compression, kips
Double Angles—Equal Legs

F_y = 36 ksi

Shape			2L6×6×										No. of connectors[a]
			9/16		1/2		7/16[c]		3/8[c]		5/16[c]		
lb/ft			43.8		39.2		34.4		29.8		24.8		
Design			P_n/Ω_c ASD	$\phi_c P_n$ LRFD	P_n/Ω_c ASD	$\phi_c P_n$ LRFD	P_n/Ω_c ASD	$\phi_c P_n$ LRFD	P_n/Ω_c ASD	$\phi_c P_n$ LRFD	P_n/Ω_c ASD	$\phi_c P_n$ LRFD	
Effective length, KL (ft), with respect to indicated axis	X-X Axis	0	278	418	248	373	214	322	172	259	131	196	
		2	276	414	246	369	212	319	171	257	130	195	
		4	268	403	239	360	207	311	167	251	127	191	
		6	257	386	229	344	198	298	160	241	123	184	
		8	241	363	215	324	187	281	152	228	117	175	
		10	223	335	199	299	173	260	141	212	109	165	
		12	202	304	181	272	157	237	130	195	101	152	
		14	180	271	161	243	141	212	117	176	92.4	139	b
		16	158	237	141	213	124	186	104	156	83.0	125	
		18	136	204	122	183	107	161	90.8	136	73.6	111	
		20	116	172	103	155	91.2	137	78.1	117	64.3	96.7	
		22	95.2	143	85.8	129	76.1	114	66.1	99.3	55.4	83.3	
		24	80.0	120	72.1	108	63.9	96.1	55.5	83.4	47.0	70.7	
		26	68.2	102	61.4	92.3	54.5	81.9	47.3	71.1	40.1	60.2	
		28	58.8	88.3	53.0	79.6	47.0	70.6	40.8	61.3	34.5	51.9	
		30	51.2	77.0	46.1	69.4	40.9	61.5	35.5	53.4	30.1	45.2	
	Y-Y Axis	0	278	418	248	373	214	322	172	259	131	196	
		6	243	373	215	323	167	250	126	190	88.0	132	
		9	237	357	206	310	164	247	125	188	87.2	131	
		12	218	328	190	286	158	238	121	182	85.4	128	
		15	199	299	174	261	148	223	116	174	82.5	124	2
		18	177	267	155	233	134	202	106	160	77.9	117	
		21	155	232	136	204	117	177	94.6	142	71.3	107	
		24	132	198	116	174	100	151	81.8	123	63.2	95.0	
		27	115	173	101	152	87.4	131	69.0	104	54.5	82.0	
		30	94.5	142	83.1	125	72.0	108	59.9	90.0	48.0	72.2	
		33	78.5	118	69.1	104	60.0	90.3	50.2	75.4	40.6	61.0	
		36	66.1	99.4	58.3	87.6	50.8	76.3	42.6	64.0	34.6	52.1	3
		39	56.5	84.9	49.8	74.9	43.5	65.4	36.5	54.9	29.9	44.9	
		42	48.8	73.3	43.1	64.7	37.6	56.6	31.7	47.6	26.0	39.0	
Properties of 2 angles—3/8 in. back to back													
A_g, in.^{2}			12.9		11.5		10.2		8.76		7.34		
r_x, in.			1.85		1.86		1.86		1.87		1.88		
r_y, in.			2.64		2.63		2.62		2.60		2.59		
Properties of single angle													
r_z, in.			1.18		1.18		1.18		1.19		1.19		

ASD	LRFD
Ω_c = 1.67	ϕ_c = 0.90

[a] For Y-Y axis, welded or pretensioned bolted intermediate connectors must be used.
[b] For required number of intermediate connectors, see the discussion of Table 4-8.
[c] Shape is slender for compression with F_y = 36 ksi.

Table 4-8 (continued)

Available Strength in Axial Compression, kips

Double Angles—Equal Legs

F_y = 36 ksi

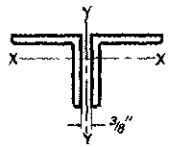

2L5

Shape			2L5×5×														No. of connectors[a]
			7/8		3/4		5/8		1/2		7/16		3/8[c]		5/16[c]		
lb/ft			54.4		47.2		40.0		32.4		28.6		24.6		20.6		
Design			P_n/Ω_c ASD	$\phi_c P_n$ LRFD	P_n/Ω_c ASD	$\phi_c P_n$ LRFD	P_n/Ω_c ASD	$\phi_c P_n$ LRFD	P_n/Ω_c ASD	$\phi_c P_n$ LRFD	P_n/Ω_c ASD	$\phi_c P_n$ LRFD	P_n/Ω_c ASD	$\phi_c P_n$ LRFD	P_n/Ω_c ASD	$\phi_c P_n$ LRFD	
Effective length, KL (ft), with respect to indicated axis	X-X Axis	0	345	518	302	454	254	382	207	310	182	273	155	232	121	181	
		2	340	511	298	448	251	377	204	306	180	270	153	230	119	179	
		4	327	491	286	430	241	363	196	295	173	260	147	221	115	173	
		6	305	458	267	402	226	340	184	276	162	244	138	208	109	164	
		8	277	417	243	366	206	310	168	252	148	223	127	191	101	151	
		10	245	368	215	324	183	275	149	225	132	199	113	170	90.9	137	
		12	211	317	186	279	159	238	130	195	115	173	99.0	149	80.2	121	b
		14	177	265	156	234	134	201	109	165	97.2	146	84.2	127	69.2	104	
		16	144	216	127	191	110	165	90.1	135	80.3	121	69.9	105	58.3	87.7	
		18	114	172	101	153	87.8	132	72.2	109	64.5	96.9	56.5	84.9	48.1	72.3	
		20	92.7	139	82.2	124	71.1	107	58.5	88.0	52.2	78.5	45.8	68.8	38.0	58.6	
		22	76.6	115	67.9	102	58.8	88.4	48.4	72.7	43.2	64.9	37.8	56.8	32.2	48.4	
		24	64.4	96.7	57.1	85.8	49.4	74.3	40.6	61.1	36.3	54.5	31.8	47.8	27.1	40.7	
		26													23.1	34.7	
	Y-Y Axis	0	345	518	302	454	254	362	207	310	182	273	155	232	121	181	
		2	337	507	293	440	244	366	192	289	165	248	123	185	89.2	134	
		4	332	498	288	433	239	360	189	284	162	244	123	184	88.9	134	
		6	322	484	280	420	233	350	184	276	158	237	122	183	88.4	133	
		8	310	466	269	404	223	336	177	266	152	228	120	181	87.5	132	
		10	295	443	255	383	212	319	168	252	142	213	116	175	85.4	128	2
		12	277	416	239	360	199	299	157	237	132	198	110	166	82.4	124	
		14	251	377	217	326	180	271	143	215	121	182	102	154	77.9	117	
		16	229	344	197	297	164	247	130	195	110	165	93.1	140	72.1	108	
		18	206	310	177	267	147	221	117	175	98.0	147	83.1	125	65.3	98.2	
		20	183	275	157	237	131	196	103	155	86.2	130	73.0	110	58.1	87.4	
		22	161	242	138	207	114	172	90.1	135	74.8	112	63.2	95.0	51.0	76.6	
		24	140	210	119	179	98.6	148	77.5	117	67.3	101	56.7	85.2	46.1	69.3	
		26	119	180	102	153	84.2	127	66.3	99.6	57.6	86.6	48.7	73.2	39.8	59.8	
		28	103	155	87.9	132	72.7	109	57.3	86.1	49.8	74.9	42.2	63.5	34.7	52.1	
		30	89.9	135	76.7	115	63.4	95.3	50.0	75.2	43.5	65.4	37.0	55.6	30.4	45.7	3
		32	79.0	119	67.4	101	55.8	83.9	44.0	66.2	38.4	57.6	32.6	49.0	26.9	40.4	
		34	70.0	105	59.8	89.8	49.5	74.4	39.1	58.7	34.0	51.2	29.0	43.6	23.9	36.0	
		36	62.5	93.9	53.3	80.2	44.2	66.4	34.9	52.4	30.4	45.7	25.9	39.0	21.4	32.2	
		38	56.1	84.3													
Properties of 2 angles—3/8 in. back to back																	
A_g, in.^{2}			16.0		14.0		11.8		9.58		8.44		7.30		6.14		
r_x, in.			1.49		1.50		1.52		1.53		1.54		1.55		1.56		
r_y, in.			2.30		2.27		2.25		2.22		2.21		2.20		2.19		
Properties of single angle																	
r_z, in.			0.971		0.972		0.975		0.980		0.983		0.986		0.990		
ASD			LRFD														
Ω_c = 1.67			ϕ_c = 0.90														

[a] For Y-Y axis, welded or pretensioned bolted intermediate connectors must be used.
[b] For required number of intermediate connectors, see the discussion of Table 4-8.
[c] Shape is slender for compression with F_y = 36 ksi.
Note: Heavy line indicates KL/r equal to or greater than 200.

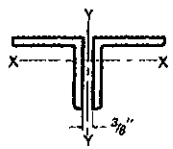

2L4

Table 4-8 (continued)
Available Strength in Axial Compression, kips
Double Angles—Equal Legs

F_y = 36 ksi

Shape			2L4×4×														No. of connectors[a]
			3/4		5/8		1/2		7/16		3/8		5/16		1/4[c]		
lb/ft			37.0		31.4		25.6		22.6		19.6		16.4		13.2		
Design			P_n/Ω_c ASD	$\phi_c P_n$ LRFD	P_n/Ω_c ASD	$\phi_c P_n$ LRFD	P_n/Ω_c ASD	$\phi_c P_n$ LRFD	P_n/Ω_c ASD	$\phi_c P_n$ LRFD	P_n/Ω_c ASD	$\phi_c P_n$ LRFD	P_n/Ω_c ASD	$\phi_c P_n$ LRFD	P_n/Ω_c ASD	$\phi_c P_n$ LRFD	
Effective length, KL (ft), with respect to indicated axis	X-X Axis	0	295	353	199	299	162	243	142	214	123	185	103	155	75.9	114	b
		2	230	346	195	293	158	238	139	210	121	182	101	152	74.6	112	
		4	215	324	183	275	149	224	131	197	114	171	95.4	143	70.7	106	
		6	193	290	164	247	134	202	118	178	103	155	86.4	130	64.7	97.3	
		8	166	249	142	213	116	174	103	154	89.5	134	75.3	113	57.2	85.9	
		10	136	205	117	176	96.3	145	85.5	128	74.7	112	63.1	94.8	48.8	73.3	
		12	107	161	93.1	140	76.7	115	68.3	103	59.9	90.1	50.8	76.4	40.1	60.3	
		14	80.8	121	70.7	106	58.5	87.9	52.3	78.6	46.1	69.3	39.3	59.1	31.9	47.9	
		16	61.9	93.0	54.1	81.4	44.8	67.3	40.1	60.2	35.3	53.0	30.1	45.2	24.6	37.0	
		18	48.9	73.5	42.8	64.3	35.4	53.2	31.6	47.6	27.9	41.9	23.8	35.7	19.4	29.2	
		20			34.6	52.1	28.7	43.1	25.6	38.5	22.6	33.9	19.3	28.9	15.7	23.7	
	Y-Y Axis	0	235	353	199	299	162	243	142	214	123	185	103	155	75.9	114	3
		2	230	345	193	290	154	232	134	201	118	170	82.9	125	55.9	84.1	
		4	224	336	188	282	150	226	130	196	110	166	82.4	124	55.7	83.7	
		6	215	323	180	270	144	216	125	188	106	159	81.4	122	55.1	82.8	
		8	202	304	169	254	135	204	117	176	99.5	150	79.2	119	54.1	81.3	
		10	187	282	156	235	125	188	108	163	92.1	138	75.1	113	52.3	78.5	
		12	166	249	138	208	111	166	95.8	144	81.5	122	67.2	101	48.3	72.6	
		14	147	221	122	184	97.6	147	84.5	127	71.9	108	59.4	89.3	43.6	65.6	
		16	128	192	106	159	84.5	127	73.0	110	62.2	93.5	51.2	77.0	38.4	57.7	
		18	109	164	90.1	135	71.7	108	61.8	92.9	52.7	79.2	43.2	64.9	32.9	49.5	
		20	91.6	138	75.0	113	59.5	89.5	51.2	76.9	43.6	65.5	35.6	53.5	27.6	41.5	
		22	75.7	114	62.1	93.3	49.3	74.1	42.4	63.7	36.2	54.4	29.7	44.6	23.1	34.8	
		24	63.7	95.7	52.2	78.5	41.5	62.4	35.7	53.7	30.5	45.9	25.1	37.7	19.6	29.5	
		26	54.3	81.6	44.5	66.9	35.4	53.2	30.5	45.8	26.1	39.2	21.5	32.3	16.9	25.3	
		28	46.8	70.4	38.4	57.7	30.6	46.0	26.3	39.6	22.5	33.8	18.6	27.9	14.6	22.0	
		30	40.8	61.3	33.5	50.3	26.7	40.1	23.0	34.5	19.6	29.5					
Properties of 2 angles—3/8 in. back to back																	
A_g, in.^{2}			10.9		9.22		7.50		6.60		5.72		4.80		3.86		
r_x, in.			1.18		1.20		1.21		1.22		1.23		1.24		1.25		
r_y, in.			1.88		1.85		1.83		1.81		1.80		1.79		1.78		
Properties of single angle																	
r_z, in.			0.774		0.774		0.776		0.777		0.779		0.781		0.783		

ASD	LRFD
Ω_c = 1.67	ϕ_c = 0.90

[a] For Y-Y axis, welded or pretensioned bolted intermediate connectors must be used.
[b] For required number of intermediate connectors, see the discussion of Table 4-8.
[c] Shape is slender for compression with F_y = 36 ksi.
Note: Heavy line indicates KL/r equal to or greater than 200.

Table 4-8 (continued)

Available Strength in Axial Compression, kips

Double Angles—Equal Legs

F_y = 36 ksi

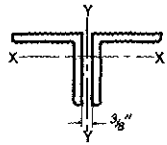

2L3½

Shape			2L3½×3½×										No. of connectors[a]
			½		7/16		3/8		5/16		¼[c]		
lb/ft			22.2		19.6		17.0		14.4		11.6		
Design			P_n/Ω_c ASD	$\phi_c P_n$ LRFD	P_n/Ω_c ASD	$\phi_c P_n$ LRFD	P_n/Ω_c ASD	$\phi_c P_n$ LRFD	P_n/Ω_c ASD	$\phi_c P_n$ LRFD	P_n/Ω_c ASD	$\phi_c P_n$ LRFD	
Effective length, KL (ft), with respect to indicated axis	X-X Axis	0	140	211	125	187	108	162	90.5	136	70.7	106	
		1	139	209	124	186	107	161	90.0	135	70.3	106	
		2	136	205	121	182	105	158	88.2	133	69.0	104	
		3	132	198	117	176	102	153	85.4	128	66.9	101	
		4	126	189	112	168	96.9	146	81.6	123	64.1	96.3	
		5	118	177	105	158	91.3	137	77.0	116	60.6	91.1	
		6	109	164	97.7	147	84.9	128	71.7	108	56.7	85.2	
		7	100	150	89.5	135	77.9	117	65.8	99.0	52.3	78.6	
		8	90.2	136	80.9	122	70.6	106	59.7	89.8	47.7	71.7	
		9	80.3	121	72.1	108	63.0	94.8	53.5	80.4	43.0	64.6	b
		10	70.4	106	63.5	95.4	55.6	83.6	47.3	71.0	38.2	57.4	
		11	61.0	91.6	55.1	82.8	48.4	72.7	41.2	62.0	33.6	50.5	
		12	51.9	78.1	47.1	70.8	41.5	62.4	35.5	53.4	29.1	43.8	
		13	44.3	66.5	40.1	60.3	35.4	53.1	30.3	45.5	24.9	37.5	
		14	38.2	57.4	34.6	52.0	30.5	45.8	26.1	39.2	21.5	32.3	
		15	33.2	50.0	30.1	45.3	26.6	39.9	22.7	34.2	18.7	28.2	
		16	29.2	43.9	26.5	39.8	23.3	35.1	20.0	30.0	16.5	24.8	
		17	25.9	38.9	23.5	35.3	20.7	31.1	17.7	26.6	14.6	21.9	
		18							15.8	23.7	13.0	19.6	
	Y-Y Axis	0	140	211	125	187	108	162	90.5	136	70.7	106	
		2	135	203	119	178	101	152	82.1	123	55.1	82.8	
		4	130	196	115	172	97.6	147	79.5	120	54.7	82.3	
		6	123	185	109	163	92.3	139	75.4	113	53.9	80.9	
		8	114	172	100	151	85.4	128	69.8	105	51.9	78.0	
		10	101	151	88.3	133	75.3	113	61.8	92.8	47.3	71.1	
		12	88.1	132	77.1	116	65.7	98.8	54.0	81.2	41.8	62.8	3
		14	75.1	113	65.6	98.6	55.9	84.0	46.0	69.2	35.6	53.6	
		16	62.5	93.9	54.4	81.7	46.3	69.6	38.2	57.4	29.5	44.4	
		18	50.6	76.0	43.9	65.9	37.4	56.1	30.8	46.3	23.9	35.9	
		20	41.0	61.7	35.6	53.5	30.4	45.6	25.1	37.7	19.5	29.3	
		22	34.0	51.0	29.5	44.3	25.2	37.8	20.8	31.3	16.2	24.4	
		24	28.6	42.9	24.8	37.3	21.2	31.8	17.5	26.3	13.7	20.6	
		26	24.4	36.6	21.2	31.8	18.1	27.2	15.0	22.5	11.7	17.6	
Properties of 2 angles—3/8 in. back to back													
A_g, in.^{2}			6.50		5.78		5.00		4.20		3.40		
r_x, in.			1.05		1.06		1.07		1.08		1.09		
r_y, in.			1.63		1.61		1.60		1.59		1.57		
Properties of single angle													
r_z, in.			0.679		0.681		0.683		0.685		0.688		

ASD	LRFD
Ω_c = 1.67	ϕ_c = 0.90

[a] For Y-Y axis, welded or pretensioned bolted intermediate connectors must be used.
[b] For required number of intermediate connectors, see the discussion of Table 4-8.
[c] Shape is slender for compression with F_y = 36 ksi.
Note: Heavy line indicates KL/r equal to or greater than 200.

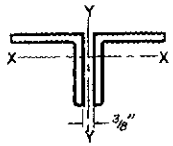

2L3

Table 4-8 (continued)
Available Strength in Axial Compression, kips
Double Angles—Equal Legs

F_y = 36 ksi

Shape			2L3×3× 1/2		7/16		3/8		5/16		1/4		3/16[c]		No. of connectors[a]
lb/ft			18.8		16.6		14.4		12.2		9.80		7.42		
Design			P_n/Ω_c ASD	$\phi_c P_n$ LRFD	P_n/Ω_c ASD	$\phi_c P_n$ LRFD	P_n/Ω_c ASD	$\phi_c P_n$ LRFD	P_n/Ω_c ASD	$\phi_c P_n$ LRFD	P_n/Ω_c ASD	$\phi_c P_n$ LRFD	P_n/Ω_c ASD	$\phi_c P_n$ LRFD	
Effective length, KL (ft), with respect to indicated axis	X-X Axis	0	119	179	105	157	91.0	137	76.7	115	62.1	93.3	42.9	64.4	b
		1	118	177	104	156	90.1	135	76.1	114	61.5	92.5	42.5	63.9	
		2	115	172	101	152	87.7	132	74.0	111	59.9	90.1	41.5	62.4	
		3	109	164	96.4	145	83.8	126	70.8	106	57.3	86.2	39.9	60.0	
		4	102	154	90.3	136	78.6	118	66.5	99.9	53.9	81.0	37.7	56.7	
		5	93.9	141	83.0	125	72.4	109	61.3	92.1	49.8	74.8	35.1	52.8	
		6	84.6	127	75.0	113	65.4	98.3	55.5	83.4	45.2	67.9	32.2	48.4	
		7	74.8	112	66.4	99.8	58.1	87.3	49.4	74.2	40.3	60.5	29.0	43.6	
		8	64.9	97.6	57.8	86.9	50.6	76.1	43.2	64.9	35.3	53.0	25.8	38.7	
		9	55.3	83.1	49.3	74.2	43.3	65.1	37.0	55.7	30.3	45.6	22.5	33.9	
		10	46.2	69.4	41.3	62.1	36.4	54.7	31.2	46.9	25.6	38.5	19.4	29.1	
		11	38.1	57.3	34.2	51.4	30.1	45.3	25.9	38.9	21.3	32.0	16.4	24.6	
		12	32.1	48.2	28.7	43.2	25.3	38.1	21.7	32.7	17.9	26.9	13.8	20.7	
		13	27.3	41.0	24.5	36.8	21.6	32.4	18.5	27.9	15.3	22.9	11.7	17.6	
		14	23.5	35.4	21.1	31.7	18.6	28.0	16.0	24.0	13.2	19.8	10.1	15.2	
		15			18.4	27.6	16.2	24.4	13.9	20.9	11.5	17.2	8.80	13.2	
	Y-Y Axis	0	119	179	105	157	91.0	137	76.7	115	62.1	93.3	42.9	64.4	3
		2	115	173	101	151	86.3	130	71.1	107	54.8	82.3	31.1	46.7	
		4	110	165	96.2	145	82.6	124	68.1	102	52.6	79.0	30.8	46.3	
		6	102	154	89.4	134	76.7	115	63.3	95.1	49.1	73.8	30.2	45.4	
		8	90.4	136	78.9	119	67.7	102	55.9	84.0	43.6	65.5	28.6	43.0	
		10	78.3	118	68.3	103	58.6	88.0	48.3	72.5	37.8	56.8	25.8	38.8	
		12	65.6	98.6	57.1	85.9	49.0	73.6	40.3	60.5	31.7	47.6	22.1	33.3	
		14	53.3	80.0	46.3	69.6	39.6	59.5	32.5	48.8	25.6	38.5	18.2	27.3	
		16	41.8	62.8	36.2	54.4	31.0	46.5	25.3	38.0	20.0	30.1	14.4	21.7	
		18	33.0	49.7	28.7	43.1	24.5	36.9	20.1	30.2	15.9	23.9	11.6	17.4	
		20	26.8	40.3	23.3	35.0	19.9	29.9	16.3	24.5	12.9	19.5	9.48	14.3	
		22	22.2	33.3	19.2	28.9	16.5	24.8	13.5	20.3	10.7	16.1	7.89	11.9	
Properties of 2 angles—3/8 in. back to back															
A_g, in.^{2}			5.52		4.86		4.22		3.56		2.88		2.18		
r_x, in.			0.895		0.903		0.910		0.918		0.926		0.933		
r_y, in.			1.43		1.42		1.41		1.39		1.38		1.37		
Properties of single angle															
r_z, in.			0.580		0.580		0.581		0.583		0.585		0.586		

ASD	LRFD
$\Omega_c = 1.67$	$\phi_c = 0.90$

[a] For Y-Y axis, welded or pretensioned bolted intermediate connectors must be used.
[b] For required number of intermediate connectors, see the discussion of Table 4-8.
[c] Shape is slender for compression with F_y = 36 ksi.
Note: Heavy line indicates KL/r equal to or greater than 200.

F_y = 36 ksi

Table 4-8 (continued)
Available Strength in Axial Compression, kips
Double Angles—Equal Legs

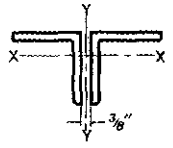

2L2½

Shape			2L2½×2½×										No. of connectors[a]
			1/2		3/8		5/16		1/4		3/16[c]		
lb/ft			15.4		11.8		10.0		8.20		6.14		
Design			P_n/Ω_c ASD	$\phi_c P_n$ LRFD	P_n/Ω_c ASD	$\phi_c P_n$ LRFD	P_n/Ω_c ASD	$\phi_c P_n$ LRFD	P_n/Ω_c ASD	$\phi_c P_n$ LRFD	P_n/Ω_c ASD	$\phi_c P_n$ LRFD	
Effective length, KL (ft), with respect to indicated axis	X-X Axis	0	97.4	146	74.6	112	62.9	94.6	51.3	77.1	38.1	57.3	
		1	96.1	144	73.6	111	62.1	93.4	50.6	76.1	37.7	56.6	
		2	92.1	138	70.7	106	59.7	89.7	48.7	73.2	36.3	54.5	
		3	85.9	129	66.0	99.3	55.9	84.0	45.6	68.6	34.1	51.2	
		4	77.8	117	60.1	90.3	50.9	76.5	41.7	62.6	31.2	46.9	
		5	68.6	103	53.2	80.0	45.2	67.9	37.1	55.7	27.9	41.9	
		6	58.8	88.4	45.9	68.9	39.0	58.7	32.1	48.3	24.3	36.5	b
		7	49.0	73.6	38.5	57.8	32.9	49.4	27.2	40.8	20.6	31.0	
		8	39.7	59.7	31.4	47.2	26.9	40.5	22.3	33.6	17.1	25.7	
		9	31.5	47.3	25.0	37.6	21.5	32.3	17.9	26.9	13.8	20.7	
		10	25.5	38.3	20.3	30.5	17.4	26.2	14.5	21.8	11.2	16.8	
		11	21.1	31.7	16.7	25.2	14.4	21.6	12.0	18.0	9.23	13.9	
		12	17.7	26.6	14.1	21.1	12.1	18.2	10.1	15.1	7.76	11.7	
	Y-Y Axis	0	97.4	146	74.6	112	62.9	94.6	51.3	77.1	38.1	57.3	
		1	95.7	144	72.4	109	60.3	90.6	47.8	71.8	29.9	45.0	
		2	94.3	142	71.3	107	59.4	89.2	47.1	70.7	29.9	44.9	
		3	92.0	138	69.5	105	57.9	86.9	45.9	69.0	29.7	44.6	
		4	88.9	134	67.1	101	55.8	83.9	44.3	66.6	29.4	44.2	
		5	85.0	128	64.1	96.4	53.3	80.1	42.3	63.6	28.9	43.5	
		6	80.5	121	60.7	91.2	50.3	75.7	40.0	60.2	28.1	42.2	
		7	73.6	111	55.4	83.3	45.9	69.1	36.6	55.0	26.3	39.5	
		8	67.8	102	51.0	76.6	42.2	63.4	33.6	50.5	24.4	36.6	
		9	61.8	92.9	46.4	69.7	38.3	57.5	30.5	45.9	22.2	33.4	
		10	55.7	83.7	41.7	62.6	34.3	51.6	27.4	41.2	19.9	30.0	3
		11	49.6	74.6	37.0	55.7	30.4	45.7	24.3	36.5	17.7	26.6	
		12	43.7	65.8	32.5	48.9	26.7	40.1	21.3	31.9	15.4	23.2	
		13	38.1	57.3	28.2	42.4	23.0	34.6	18.3	27.6	13.3	20.0	
		14	32.9	49.5	24.4	36.6	19.9	29.9	15.9	23.8	11.6	17.4	
		15	28.7	43.1	21.2	31.9	17.3	26.1	13.9	20.8	10.1	15.2	
		16	25.2	37.9	18.7	28.1	15.3	22.9	12.2	18.3	8.96	13.5	
		17	22.3	33.6	16.6	24.9	13.5	20.3	10.8	16.3	7.96	12.0	
		18	19.9	30.0	14.8	22.2	12.1	18.2	9.66	14.5	7.12	10.7	
		19	17.9	26.9	13.3	20.0	10.9	16.3	8.68	13.1	6.40	9.62	
		20	16.2	24.3	12.0	18.0							
Properties of 2 angles—3/8 in. back to back													
A_g, in.^{2}			4.52		3.46		2.92		2.38		1.80		
r_x, in.			0.735		0.749		0.756		0.764		0.771		
r_y, in.			1.23		1.21		1.19		1.18		1.17		
Properties of single angle													
r_z, in.			0.481		0.481		0.481		0.482		0.482		

ASD	LRFD
Ω_c = 1.67	ϕ_c = 0.90

[a] For Y-Y axis, welded or pretensioned bolted intermediate connectors must be used.
[b] For required number of intermediate connectors, see the discussion of Table 4-8.
[c] Shape is slender for compression with F_y = 36 ksi.
Note: Heavy line indicates KL/r equal to or greater than 200.

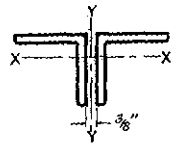

2L2

Table 4-8 (continued)
Available Strength in Axial Compression, kips
Double Angles—Equal Legs

F_y = 36 ksi

Shape			2L2×2× 3/8		5/16		1/4		3/16		1/8[c]		No. of connectors[a]
lb/ft			9.40		7.84		6.38		4.88		3.30		
Design			P_n/Ω_c ASD	$\phi_c P_n$ LRFD	P_n/Ω_c ASD	$\phi_c P_n$ LRFD	P_n/Ω_c ASD	$\phi_c P_n$ LRFD	P_n/Ω_c ASD	$\phi_c P_n$ LRFD	P_n/Ω_c ASD	$\phi_c P_n$ LRFD	
Effective length, KL (ft), with respect to indicated axis	X-X Axis	0	59.1	88.8	50.0	75.2	40.7	61.2	31.0	46.7	19.3	29.0	
		1	57.8	86.9	49.0	73.6	39.9	60.0	30.4	45.7	19.0	28.5	
		2	54.2	81.4	45.9	69.1	37.5	56.4	28.6	43.0	18.0	27.0	
		3	48.6	73.0	41.3	62.1	33.8	50.8	25.9	38.9	16.4	24.7	
		4	41.7	62.7	35.6	53.5	29.3	44.0	22.5	33.7	14.5	21.8	
		5	34.3	51.6	29.4	44.2	24.3	36.5	18.7	28.1	12.3	18.5	b
		6	27.0	40.6	23.3	35.0	19.3	29.1	15.0	22.5	10.1	15.2	
		7	20.4	30.6	17.7	26.6	14.7	22.1	11.5	17.3	8.00	12.0	
		8	15.6	23.5	13.5	20.3	11.3	17.0	8.80	13.2	6.16	9.25	
		9	12.3	18.5	10.7	16.1	8.91	13.4	6.95	10.4	4.86	7.31	
		10					7.22	10.9	5.63	8.46	3.94	5.92	
	Y-Y Axis	0	59.1	88.8	50.0	75.2	40.7	61.2	31.0	46.7	19.3	29.0	
		1	57.8	86.9	48.6	73.0	39.0	58.6	28.5	42.9	14.1	21.2	
		2	56.5	85.0	47.5	71.4	38.1	57.3	27.9	42.0	14.1	21.2	
		3	54.5	81.9	45.7	68.7	36.7	55.1	26.9	40.5	14.0	21.0	
		4	51.8	77.8	43.4	65.2	34.8	52.3	25.6	38.4	13.8	20.7	
		5	48.5	72.9	40.6	61.0	32.5	48.8	23.9	35.9	13.4	20.2	
		6	43.5	65.3	36.3	54.6	29.1	43.7	21.4	32.2	12.6	19.0	
		7	39.1	58.8	32.6	49.0	26.1	39.2	19.2	28.9	11.6	17.5	
		8	34.6	52.0	28.8	43.3	23.0	34.5	16.9	25.4	10.4	15.7	3
		9	30.1	45.3	25.0	37.6	19.9	29.9	14.6	22.0	9.14	13.7	
		10	25.8	38.8	21.3	32.0	16.9	25.4	12.4	18.7	7.85	11.8	
		11	21.7	32.6	17.9	26.8	14.1	21.2	10.4	15.6	6.62	9.94	
		12	18.2	27.4	15.0	22.6	11.9	17.9	8.75	13.1	5.62	8.45	
		13	15.5	23.4	12.8	19.3	10.1	15.2	7.47	11.2	4.83	7.26	
		14	13.4	20.1	11.1	16.6	8.76	13.2	6.46	9.71	4.19	6.30	
		15	11.7	17.6	9.63	14.5	7.64	11.5	5.64	8.47	3.67	5.51	
		16	10.3	15.4	8.47	12.7	6.72	10.1	4.96	7.46			
Properties of 2 angles—3/8 in. back to back													
A_g, in.^{2}			2.74		2.32		1.89		1.44		0.982		
r_x, in.			0.591		0.598		0.605		0.612		0.620		
r_y, in.			1.01		0.996		0.982		0.967		0.951		
Properties of single angle													
r_z, in.			0.386		0.386		0.387		0.389		0.391		

ASD	LRFD
Ω_c = 1.67	ϕ_c = 0.90

[a] For Y-Y axis, welded or pretensioned bolted intermediate connectors must be used.
[b] For required number of intermediate connectors, see the discussion of Table 4-8.
[c] Shape is slender for compression with F_y = 36 ksi.
Note: Heavy line indicates KL/r equal to or greater than 200.

Table 4-9
Available Strength in Axial Compression, kips
Double Angles—LLBB

F_y = 36 ksi

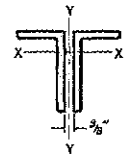

2L8 LLBB

Shape			2L8×6×														No. of connectors[a]
			1		7/8		3/4		5/8		9/16[c]		1/2[c]		7/16[c]		
lb/ft			88.4		78.2		67.6		57.0		51.4		46.0		40.4		
Design			P_n/Ω_c ASD	$\phi_c P_n$ LRFD	P_n/Ω_c ASD	$\phi_c P_n$ LRFD	P_n/Ω_c ASD	$\phi_c P_n$ LRFD	P_n/Ω_c ASD	$\phi_c P_n$ LRFD	P_n/Ω_c ASD	$\phi_c P_n$ LRFD	P_n/Ω_c ASD	$\phi_c P_n$ LRFD	P_n/Ω_c ASD	$\phi_c P_n$ LRFD	
Effective length, KL (ft), with respect to indicated axis	X-X Axis	0	565	849	496	745	431	648	361	543	314	472	267	402	220	330	
		4	554	832	486	731	423	636	354	533	309	464	263	395	216	325	
		6	540	812	475	713	413	621	346	520	302	454	257	387	212	319	
		8	522	785	459	690	399	600	335	503	293	440	250	375	206	310	
		10	500	751	439	660	383	575	321	483	281	422	240	361	199	300	
		12	474	712	416	626	363	546	305	458	268	402	229	345	191	287	
		14	449	668	391	588	341	513	287	431	252	379	217	326	181	273	
		16	413	621	363	546	318	477	268	402	236	355	204	306	171	257	
		18	380	571	335	503	293	440	247	371	219	329	189	285	160	240	
		20	346	521	305	459	267	402	226	340	201	302	175	263	148	223	
		22	313	470	276	414	242	364	205	308	183	275	160	240	137	205	b
		24	279	420	247	371	217	326	184	276	165	248	145	218	125	188	
		26	247	371	218	328	192	289	164	246	148	222	130	196	113	170	
		28	216	325	191	288	169	254	144	217	131	197	116	175	102	153	
		30	188	283	167	251	147	221	126	189	115	172	103	154	90.8	136	
		32	166	249	147	220	129	195	110	166	101	151	90.1	135	80.2	120	
		34	147	220	130	195	115	172	97.9	147	89.2	134	79.9	120	71.0	107	
		36	131	197	116	174	102	154	87.3	131	79.6	120	71.2	107	63.3	95.2	
		38	117	176	104	156	91.8	138	78.3	118	71.4	107	63.9	96.1	56.8	85.4	
		40	106	159	93.8	141	82.9	125	70.7	106	64.5	96.9	57.7	86.7	51.3	77.1	
		42					75.2	113	64.1	96.4	58.5	87.9	52.3	78.6	46.5	69.9	
	Y-Y Axis	0	565	849	496	745	431	648	361	543	314	472	267	402	220	330	
		4	528	794	456	685	385	579	302	453	254	382	208	312	162	244	
		6	516	776	446	670	377	566	299	449	252	379	206	310	161	242	
		8	500	752	432	649	365	549	294	442	248	373	203	306	159	239	
		10	480	722	415	623	351	527	286	430	243	365	199	300	156	235	
		12	457	686	394	593	334	502	275	414	234	352	194	291	153	229	
		14	420	631	363	545	307	462	255	383	219	329	183	274	146	219	
		16	389	585	336	505	285	428	236	355	204	307	171	258	138	207	
		18	357	536	308	463	261	393	216	325	188	282	159	239	129	194	
		20	324	486	279	420	237	356	195	293	170	256	145	218	119	179	
		22	291	437	251	377	212	319	174	262	153	230	131	197	109	163	2
		24	258	388	223	334	188	283	154	231	135	203	117	176	97.9	147	
		26	227	341	195	294	165	248	134	201	118	178	103	155	87.2	131	
		28	197	296	169	255	143	215	116	175	103	155	90.0	135	76.8	115	
		30	172	258	148	222	125	188	102	153	90.7	136	79.3	119	68.0	102	
		32	151	227	130	196	110	166	90.1	135	80.3	121	70.4	106	60.5	90.9	
		34	134	202	116	174	98.1	147	80.1	120	71.5	107	62.8	94.4	54.1	81.3	
		36	120	180	103	155	87.7	132	71.7	108	64.1	96.3	56.3	84.7	48.7	73.2	
		38	108	162	92.9	140	78.8	118	64.6	97.1	57.7	86.8	50.8	76.4	44.0	66.1	
		40	97.2	146	83.9	126	71.3	107	58.4	87.8	52.3	78.6	46.1	69.2	39.9	60.0	
		42	88.3	133													
Properties of 2 angles—3/8 in. back to back																	
A_g, in.^{2}			26.2		23.0		20.0		16.8		15.2		13.6		12.0		
r_x, in.			2.49		2.50		2.52		2.54		2.55		2.55		2.56		
r_y, in.			2.52		2.50		2.47		2.45		2.44		2.43		2.42		
Properties of single angle																	
r_z, in.			1.28		1.28		1.29		1.29		1.30		1.30		1.31		

ASD	LRFD
$\Omega_c = 1.67$	$\phi_c = 0.90$

[a] For Y-Y axis, welded or pretensioned bolted intermediate connectors must be used.
[b] For required number of intermediate connectors, see the discussion of Table 4-8.
[c] Shape is slender for compression with F_y = 36 ksi.
Note: Heavy line indicates KL/r equal to or greater than 200.

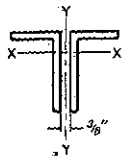

2L8 LLBB

Table 4-9 (continued)
Available Strength in Axial Compression, kips
Double Angles—LLBB

F_y = 36 ksi

Shape			2L8×4× 1		7/8		3/4		5/8		9/16[c]		1/2[c]		7/16[c]		No. of connectors[a]
lb/ft			74.8		66.2		57.4		48.4		43.8		39.2		34.4		
Design			P_n/Ω_c ASD	$\phi_c P_n$ LRFD	P_n/Ω_c ASD	$\phi_c P_n$ LRFD	P_n/Ω_c ASD	$\phi_c P_n$ LRFD	P_n/Ω_c ASD	$\phi_c P_n$ LRFD	P_n/Ω_c ASD	$\phi_c P_n$ LRFD	P_n/Ω_c ASD	$\phi_c P_n$ LRFD	P_n/Ω_c ASD	$\phi_c P_n$ LRFD	
Effective length, KL (ft), with respect to indicated axis	X-X Axis	0	479	719	423	635	366	551	307	462	269	404	228	343	187	281	
		4	469	706	415	623	360	541	302	453	264	397	224	337	184	277	
		6	458	689	405	609	351	528	295	443	258	388	220	330	181	271	
		8	443	666	392	589	340	511	285	429	250	376	213	321	176	264	
		10	424	638	375	564	326	490	274	412	241	362	206	309	170	255	
		12	402	605	356	535	310	466	260	391	229	345	196	295	163	245	
		14	378	568	335	503	292	438	245	368	217	326	186	280	155	233	
		16	352	529	312	469	272	409	229	344	203	305	175	263	146	220	
		18	324	487	288	433	251	378	212	318	188	283	163	245	137	206	
		20	296	444	263	395	230	346	194	291	173	260	151	226	127	191	
		22	267	402	238	358	208	313	176	264	158	237	138	207	117	176	b
		24	239	360	214	321	187	281	158	238	143	214	125	188	107	162	
		26	212	319	190	285	167	250	141	212	128	192	113	170	97.6	147	
		28	186	280	167	251	147	221	124	187	113	170	101	152	88.0	132	
		30	162	244	146	219	128	193	109	163	99.6	150	89.6	135	78.7	118	
		32	143	214	128	192	113	169	95.5	144	87.5	132	78.7	118	69.7	105	
		34	126	190	113	170	99.8	150	84.6	127	77.5	117	69.7	105	61.8	92.9	
		36	113	169	101	152	89.0	134	75.5	113	69.2	104	62.2	93.5	55.1	82.8	
		38	101	152	90.7	136	79.9	120	67.7	102	62.1	93.3	55.8	83.9	49.5	74.3	
		40	91.2	137	81.8	123	72.1	108	61.1	91.9	56.0	84.2	50.4	75.7	44.6	67.1	
		42			74.2	112	65.4	98.3	55.5	83.3	50.8	76.4	45.7	68.7	40.5	60.9	
	Y-Y Axis	0	479	719	423	635	366	551	307	462	269	404	228	343	187	281	
		4	429	645	370	557	311	467	256	385	218	327	178	268	140	210	
		6	406	610	350	526	294	442	245	368	209	314	172	258	135	203	
		8	375	564	323	486	272	408	227	341	195	293	161	242	128	192	
		10	330	496	284	427	239	359	198	298	171	258	143	216	115	173	
		12	288	432	247	371	208	312	170	256	148	223	125	188	102	153	
		14	244	367	209	314	176	264	142	213	124	187	106	159	87.5	131	2
		16	202	304	172	259	145	217	115	172	101	152	87.0	131	72.9	110	
		18	163	245	138	208	116	174	92.1	138	81.6	123	70.6	106	59.7	89.7	
		20	132	199	112	169	94.6	142	75.5	113	67.1	101	58.3	87.6	49.5	74.4	
		22	110	165	93.3	140	78.6	118	63.0	94.6	56.1	84.3	48.8	73.4	41.7	62.6	
		24	92.5	139	78.7	118	66.3	99.7	53.2	80.0	47.5	71.4	41.4	62.3	35.5	53.3	
		26	79.0	119	67.2	101											
Properties of 2 angles—3/8 in. back to back																	
A_g, in.^{2}			22.2		19.6		17.0		14.3		13.0		11.6		10.2		
r_x, in.			2.51		2.53		2.55		2.56		2.57		2.58		2.59		
r_y, in.			1.60		1.57		1.55		1.52		1.51		1.50		1.49		
Properties of single angle																	
r_z, in.			0.844		0.846		0.850		0.856		0.859		0.863		0.867		

ASD	LRFD
Ω_c = 1.67	ϕ_c = 0.90

[a] For Y-Y axis, welded or pretensioned bolted intermediate connectors must be used.
[b] For required number of intermediate connectors, see the discussion of Table 4-8.
[c] Shape is slender for compression with F_y = 36 ksi.
Note: Heavy line indicates KL/r equal to or greater than 200.

Table 4-9 (continued)

Available Strength in Axial Compression, kips

Double Angles—LLBB

F_y = 36 ksi

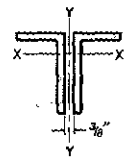

2L7 LLBB

Shape			2L7×4×										No. of connectors[a]
			3/4		5/8		1/2[c]		7/16[c]		3/8[c]		
lb/ft			52.4		44.2		35.8		31.4		27.2		
Design			P_n/Ω_c ASD	$\phi_c P_n$ LRFD	P_n/Ω_c ASD	$\phi_c P_n$ LRFD	P_n/Ω_c ASD	$\phi_c P_n$ LRFD	P_n/Ω_c ASD	$\phi_c P_n$ LRFD	P_n/Ω_c ASD	$\phi_c P_n$ LRFD	
Effective length, KL (ft), with respect to indicated axis	X-X Axis	0	334	502	280	421	218	328	182	274	145	218	
		4	326	490	273	411	213	321	178	268	142	213	
		6	316	475	265	399	207	312	173	261	139	208	
		8	303	455	254	382	199	299	167	251	134	201	
		10	286	430	241	362	189	284	159	239	128	192	
		12	267	402	225	338	177	267	150	225	121	182	
		14	246	370	208	312	165	247	140	210	114	171	
		16	225	338	190	285	151	227	129	193	106	159	
		18	202	304	171	257	137	206	117	176	97.1	146	
		20	180	270	152	229	123	184	106	159	88.4	133	b
		22	158	237	134	201	109	163	94.6	142	79.7	120	
		24	137	205	116	175	95.0	143	83.5	125	71.1	107	
		26	117	176	99.8	150	82.1	123	72.9	110	62.8	94.4	
		28	101	151	86.1	129	70.8	106	63.0	94.6	54.9	82.6	
		30	87.8	132	75.0	113	61.6	92.7	54.9	82.4	47.8	71.9	
		32	77.2	116	65.9	99.0	54.2	81.4	48.2	72.5	42.0	63.2	
		34	68.4	103	58.4	87.7	48.0	72.1	42.7	64.2	37.2	55.9	
		36	61.0	91.6	52.1	78.3	42.8	64.3	38.1	57.3	33.2	49.9	
	Y-Y Axis	0	334	502	280	421	218	328	182	274	145	218	
		4	295	443	238	357	178	268	143	215	108	162	
		6	279	420	225	339	172	259	138	208	105	158	
		8	259	389	209	314	161	243	131	197	100	150	
		10	228	343	185	277	143	215	117	177	91.3	137	
		12	200	300	161	243	125	188	104	156	81.7	123	
		14	171	256	138	207	106	159	88.6	133	71.1	107	2
		16	142	213	114	171	87.3	131	73.8	111	60.1	90.4	
		18	115	172	91.9	138	70.4	106	60.1	90.3	49.6	74.5	
		20	93.3	140	75.0	113	57.8	86.9	49.6	74.5	41.2	62.0	
		22	77.4	116	62.4	93.7	48.3	72.6	41.5	62.4	34.7	52.2	
		24	65.3	98.1	52.6	79.1	40.9	61.5	35.2	53.0	29.6	44.4	
		26	55.7	83.8	45.0	67.6	35.0	52.7					
Properties of 2 angles—3/8 in. back to back													
A_g, in.^{2}			15.5		13.0		10.5		9.26		8.00		
r_x, in.			2.21		2.23		2.25		2.26		2.27		
r_y, in.			1.61		1.58		1.56		1.55		1.54		
Properties of single angle													
r_z, in.			0.855		0.860		0.866		0.869		0.873		

ASD	LRFD
$\Omega_c = 1.67$	$\phi_c = 0.90$

[a] For Y-Y axis, welded or pretensioned bolted intermediate connectors must be used.
[b] For required number of intermediate connectors, see the discussion of Table 4-8.
[c] Shape is slender for compression with F_y = 36 ksi.
Note: Heavy line indicates KL/r equal to or greater than 200.

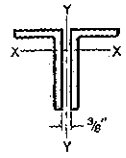

2L6 LLBB

Table 4-9 (continued)
Available Strength in Axial Compression, kips
Double Angles—LLBB

F_y = 36 ksi

Shape			2L6×4× 7/8		3/4		5/8		9/16		No. of connectors[a]
lb/ft			54.4		47.2		40.0		36.2		
Design			P_n/Ω_c ASD	$\phi_c P_n$ LRFD	P_n/Ω_c ASD	$\phi_c P_n$ LRFD	P_n/Ω_c ASD	$\phi_c P_n$ LRFD	P_n/Ω_c ASD	$\phi_c P_n$ LRFD	
Effective length, KL (ft), with respect to indicated axis	X-X Axis	0	345	518	300	450	252	379	229	343	b
		4	333	501	290	435	244	366	221	332	
		6	319	479	277	417	234	351	212	318	
		8	300	451	261	393	220	331	200	300	
		10	277	416	242	363	204	307	185	278	
		12	252	378	220	331	186	279	169	254	
		14	224	337	197	296	166	250	151	228	
		16	197	296	173	260	146	220	133	201	
		18	170	255	150	225	127	191	116	174	
		20	144	216	127	191	108	162	98.6	148	
		22	119	179	106	159	90.1	135	82.5	124	
		24	100	151	89.0	134	75.7	114	69.3	104	
		26	85.6	128	75.9	114	64.5	97.0	59.1	88.8	
		28	73.7	111	65.4	98.3	55.6	83.6	50.9	76.6	
		30	64.2	96.5	57.0	85.6	48.5	72.9	44.4	66.7	
	Y-Y Axis	0	345	518	300	450	252	379	229	343	2
		4	319	480	273	410	224	336	199	298	
		6	304	456	259	390	213	320	189	284	
		8	283	425	241	363	198	298	176	265	
		10	251	378	214	322	176	264	156	235	
		12	222	334	189	284	155	233	138	208	
		14	192	289	163	244	133	200	119	179	
		16	162	244	137	205	112	168	99.8	150	
		18	134	201	112	168	91.5	138	81.5	123	
		20	109	163	91.1	137	74.5	112	66.5	99.9	
		22	89.9	135	75.5	113	61.9	93.0	55.2	83.0	
		24	75.7	114	63.5	95.5	52.1	78.3	46.6	70.0	
		26	64.6	97.0	54.2	81.5	44.5	66.9	39.8	59.8	
		28	55.7	83.7	46.8	70.4					
Properties of 2 angles—3/8 in. back to back											
A_g, in.^{2}			16.0		13.9		11.7		10.6		
r_x, in.			1.86		1.88		1.89		1.90		
r_y, in.			1.71		1.68		1.66		1.65		
Properties of single angle											
r_z, in.			0.854		0.856		0.859		0.861		

ASD	LRFD
Ω_c = 1.67	ϕ_c = 0.90

[a] For Y-Y axis, welded or pretensioned bolted intermediate connectors must be used.
[b] For required number of intermediate connectors, see the discussion of Table 4-8.
Note: Heavy line indicates KL/r equal to or greater than 200.

Table 4-9 (continued)

Available Strength in Axial Compression, kips

Double Angles—LLBB

F_y = 36 ksi

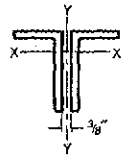

2L6 LLBB

Shape			2L6×4×								No. of connectors[a]
			1/2		7/16[c]		3/8[c]		5/16[c]		
lb/ft			32.4		28.6		24.6		20.6		
Design			P_n/Ω_c ASD	$\phi_c P_n$ LRFD	P_n/Ω_c ASD	$\phi_c P_n$ LRFD	P_n/Ω_c ASD	$\phi_c P_n$ LRFD	P_n/Ω_c ASD	$\phi_c P_n$ LRFD	
Effective length, KL (ft), with respect to indicated axis	X-X Axis	0	205	308	175	264	142	213	108	162	
		4	198	298	170	255	138	207	105	158	
		6	190	286	163	245	133	200	102	153	
		8	179	269	154	232	126	189	97.0	146	
		10	166	250	144	216	118	177	91.4	137	
		12	152	228	131	198	109	163	84.9	128	
		14	136	205	118	178	98.7	148	77.9	117	
		16	120	181	105	158	88.3	133	70.5	106	b
		18	104	157	91.7	138	77.8	117	62.9	94.6	
		20	89.2	134	78.8	118	67.6	102	55.5	83.4	
		22	74.7	112	66.5	99.9	57.8	86.9	48.2	72.5	
		24	62.8	94.4	55.8	83.9	48.7	73.2	41.3	62.1	
		26	53.5	80.4	47.6	71.5	41.5	62.4	35.2	52.9	
		28	46.1	69.4	41.0	61.7	35.8	53.8	30.4	45.6	
		30	40.2	60.4	35.7	53.7	31.2	46.9	26.5	39.8	
		32			31.4	47.2	27.4	41.2	23.2	34.9	
	Y-Y Axis	0	205	308	175	264	142	213	108	162	
		4	173	260	143	215	111	166	78.6	118	
		6	164	247	139	209	108	162	77.0	116	
		8	154	231	132	198	103	155	74.2	112	
		10	137	206	118	177	93.7	141	68.9	104	
		12	121	182	104	156	83.6	126	62.7	94.2	
		14	104	157	89.0	134	72.5	109	55.4	83.3	2
		16	87.7	132	74.3	112	61.2	92.0	47.7	71.7	
		18	71.6	108	60.3	90.7	50.3	75.6	40.0	60.1	
		20	58.5	88.0	49.5	74.4	41.5	62.4	33.3	50.1	
		22	48.7	73.2	41.3	62.1	34.8	52.3	28.1	42.2	
		24	41.1	61.8	35.0	52.6	29.5	44.3	24.0	36.0	
		26	35.1	52.8	30.0	45.0	25.3	38.1	20.7	31.0	
Properties of 2 angles—3/8 in. back to back											
A_g, in.^{2}			9.50		8.36		7.22		6.06		
r_x, in.			1.91		1.92		1.93		1.94		
r_y, in.			1.64		1.62		1.61		1.60		
Properties of single angle											
r_z, in.			0.864		0.867		0.870		0.874		

ASD	LRFD
Ω_c = 1.67	ϕ_c = 0.90

[a] For Y-Y axis, welded or pretensioned bolted intermediate connectors must be used.
[b] For required number of intermediate connectors, see the discussion of Table 4-8.
[c] Shape is slender for compression with F_y = 36 ksi.
Note: Heavy line indicates KL/r equal to or greater than 200.

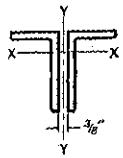

2L6 LLBB

Table 4-9 (continued)
Availabie Strength in Axial Compression, kips
Double Angles—LLBB

F_y = 36 ksi

Shape			2L6×3 1/2×						No. of connectors[a]
			1/2		3/8[c]		5/16[c]		
lb/ft			30.6		23.4		19.6		
Design			P_n/Ω_c ASD	$\phi_c P_n$ LRFD	P_n/Ω_c ASD	$\phi_c P_n$ LRFD	P_n/Ω_c ASD	$\phi_c P_n$ LRFD	
Effective length, KL (ft), with respect to indicated axis	X-X Axis	0	194	292	135	203	103	155	b
		2	192	289	134	202	102	154	
		4	188	282	131	197	100	151	
		6	180	271	127	190	96.9	146	
		8	170	256	120	181	92.5	139	
		10	158	237	112	169	87.1	131	
		12	144	217	104	156	81.0	122	
		14	130	195	94.0	141	74.3	112	
		16	115	172	84.1	126	67.2	101	
		18	99.6	150	74.1	111	60.0	90.2	
		20	85.2	128	64.4	96.8	52.9	79.5	
		22	71.6	108	55.1	82.8	46.0	69.1	
		24	60.1	90.4	46.4	69.8	39.4	59.2	
		28	44.2	66.4	34.1	51.3	29.0	43.5	
		30	38.5	57.8	29.7	44.7	25.2	37.9	
		32	33.8	50.8	26.1	39.3	22.2	33.3	
	Y-Y Axis	0	194	292	135	203	103	155	2
		2	166	250	107	161	76.5	115	
		4	160	240	105	158	75.2	113	
		6	150	225	101	152	72.6	109	
		8	133	200	91.9	138	67.3	101	
		10	116	175	81.0	122	60.6	91.0	
		12	98.0	147	68.7	103	52.5	78.9	
		14	79.8	120	56.3	84.6	43.9	66.0	
		16	62.8	94.4	44.7	67.2	35.6	53.5	
		18	50.1	75.3	36.1	54.2	29.0	43.5	
		20	40.9	61.4	29.6	44.5	24.0	36.0	
		22	34.0	51.0	24.7	37.2	20.1	30.2	
Properties of 2 angles—3/8 in. back to back									
A_g, in.^{2}			9.00		6.88		5.78		
r_x, in.			1.92		1.93		1.94		
r_y, in.			1.40		1.38		1.37		
Properties of single angle									
r_z, in.			0.756		0.763		0.767		

ASD	LRFD
Ω_c = 1.67	ϕ_c = 0.90

[a] For Y-Y axis, welded or pretensioned bolted intermediate connectors must be used.
[b] For required number of intermediate connectors, see the discussion of Table 4-8.
[c] Shape is slender for compression with F_y = 36 ksi.

Table 4-9 (continued)

Available Strength in Axial Compression, kips

Double Angles—LLBB

F_y = 36 ksi

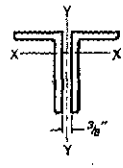

2L5 LLBB

Shape			2L5×3½×										No. of connectors[a]
			3/4		5/8		1/2		3/8[c]		5/16[c]		
lb/ft			39.6		33.6		27.2		20.8		17.4		
Design			P_n/Ω_c ASD	$\phi_c P_n$ LRFD	P_n/Ω_c ASD	$\phi_c P_n$ LRFD	P_n/Ω_c ASD	$\phi_c P_n$ LRFD	P_n/Ω_c ASD	$\phi_c P_n$ LRFD	P_n/Ω_c ASD	$\phi_c P_n$ LRFD	
Effective length, KL (ft), with respect to indicated axis	X-X Axis	0	252	379	213	319	172	259	129	194	101	151	
		2	249	374	210	316	170	256	128	192	99.6	150	
		4	240	360	202	304	164	247	123	185	96.4	145	
		6	225	338	190	286	155	232	116	175	91.3	137	
		8	206	310	174	262	142	213	107	161	84.7	127	
		10	184	276	156	234	127	191	96.3	145	76.8	115	
		12	160	241	136	204	111	167	84.6	127	68.2	103	b
		14	136	204	115	173	95.1	143	72.5	109	59.3	89.1	
		16	112	169	95.7	144	79.3	119	60.8	91.4	50.4	75.8	
		18	90.6	136	77.3	116	64.3	96.7	49.7	74.7	42.0	63.1	
		20	73.4	110	62.6	94.1	52.1	78.3	40.2	60.5	34.2	51.4	
		22	60.6	91.1	51.7	77.8	43.1	64.7	33.3	50.0	28.3	42.5	
		24	50.9	76.6	43.5	65.4	36.2	54.4	27.9	42.0	23.8	35.7	
	Y-Y Axis	0	252	379	213	319	172	259	129	194	101	151	
		2	241	362	199	300	157	235	108	162	79.1	119	
		4	232	348	192	289	151	227	106	159	78.0	117	
		6	218	327	180	271	142	213	102	153	75.5	113	
		8	195	293	161	242	127	190	92.6	139	69.9	105	
		10	172	258	141	212	111	167	81.6	123	62.5	94.0	
		12	147	221	120	181	94.8	143	69.3	104	53.9	80.9	2
		14	122	183	99.6	150	78.4	118	56.9	85.6	44.8	67.4	
		16	98.6	148	79.8	120	62.6	94.1	45.2	68.0	36.1	54.2	
		18	81.9	123	63.3	95.2	49.8	74.9	36.2	54.5	29.1	43.7	
		20	66.5	99.9	51.4	77.3	40.5	60.9	29.6	44.5	23.9	35.9	
		22	55.0	82.7	42.6	64.0	33.6	50.5	24.6	37.0	19.9	30.0	
		24	46.3	69.6	37.5	56.4	28.3	42.5	20.8	31.3	16.9	25.4	
													3
Properties of 2 angles—3/8 in. back to back													
A_g, in.^{2}			11.7		9.86		8.00		6.10		5.12		
r_x, in.			1.55		1.56		1.58		1.59		1.60		
r_y, in.			1.53		1.50		1.48		1.46		1.44		
Properties of single angle													
r_z, in.			0.744		0.746		0.750		0.755		0.758		

ASD	LRFD
Ω_c = 1.67	ϕ_c = 0.90

[a] For Y-Y axis, welded or pretensioned bolted intermediate connectors must be used.
[b] For required number of intermediate connectors, see the discussion of Table 4-8.
[c] Shape is slender for compression with F_y = 36 ksi.
Note: Heavy line indicates KL/r equal to or greater than 200.

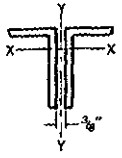

2L5 LLBB

Table 4-9 (continued)
Available Strength in Axial Compression, kips
Double Angles—LLBB

F_y = 36 ksi

Shape			2L5×3×										No. of connectors[a]
			1/2		7/16		3/8[c]		5/16[c]		1/4[c]		
lb/ft			25.6		22.6		19.6		16.4		13.2		
Design			P_n/Ω_c ASD	$\phi_c P_n$ LRFD	P_n/Ω_c ASD	$\phi_c P_n$ LRFD	P_n/Ω_c ASD	$\phi_c P_n$ LRFD	P_n/Ω_c ASD	$\phi_c P_n$ LRFD	P_n/Ω_c ASD	$\phi_c P_n$ LRFD	
Effective length, KL (ft), with respect to indicated axis	X-X Axis	0	162	243	143	214	121	182	94.8	142	67.2	101	
		2	160	240	141	212	120	180	93.8	141	66.6	100	
		4	154	231	136	204	116	174	90.8	136	64.8	97.4	
		6	145	218	128	193	109	164	86.1	129	61.9	93.0	
		8	133	200	118	177	101	151	79.9	120	58.0	87.1	
		10	119	179	105	159	90.6	136	72.6	109	53.3	80.1	
		12	104	157	92.7	139	79.7	120	64.5	97.0	48.1	72.3	
		14	89.2	134	79.3	119	68.5	103	56.2	84.4	42.7	64.1	b
		16	74.3	112	66.2	99.5	57.5	86.5	47.9	72.0	37.1	55.8	
		18	60.3	90.7	53.9	81.0	47.2	70.9	39.9	60.0	31.7	47.6	
		20	48.9	73.4	43.7	65.6	38.2	57.4	32.6	49.0	26.6	39.9	
		22	40.4	60.7	36.1	54.2	31.6	47.5	26.9	40.5	22.0	33.0	
		24	33.9	51.0	30.3	45.6	26.5	39.9	22.6	34.0	18.5	27.7	
	Y-Y Axis	0	162	243	143	214	121	182	94.8	142	67.2	101	
		2	145	218	124	186	102	153	75.1	113	49.3	74.1	
		4	137	206	118	177	98.5	148	73.1	110	48.2	72.4	
		6	125	189	108	162	91.7	138	68.9	104	46.0	69.1	
		8	107	161	92.2	139	78.6	118	60.4	90.7	41.4	62.3	
		10	89.1	134	76.8	115	65.0	97.7	50.8	76.3	35.8	53.9	
		12	71.0	107	61.2	92.0	51.2	77.0	40.8	61.3	29.6	44.5	2
		14	54.0	81.2	46.6	70.0	38.8	58.4	31.4	47.2	23.4	35.1	
		16	41.7	62.6	36.0	54.1	30.2	45.4	24.6	36.9	18.5	27.8	
		18	33.1	49.7	28.6	43.0	24.1	36.2	19.7	29.6	15.0	22.5	
		20	26.9	40.4	23.3	35.0	19.6	29.5	16.1	24.2			
Properties of 2 angles—3/8 in. back to back													
A_g, in.^{2}			7.50		6.62		5.72		4.82		3.88		
r_x, in.			1.58		1.59		1.60		1.61		1.62		
r_y, in.			1.24		1.23		1.22		1.21		1.19		
Properties of single angle													
r_z, in.			0.642		0.644		0.646		0.649		0.652		

ASD	LRFD
$\Omega_c = 1.67$	$\phi_c = 0.90$

[a] For Y-Y axis, welded or pretensioned bolted intermediate connectors must be used.
[b] For required number of intermediate connectors, see the discussion of Table 4-8.
[c] Shape is slender for compression with F_y = 36 ksi.
Note: Heavy line indicates KL/r equal to or greater than 200.

Table 4-9 (continued)

Available Strength in Axial Compression, kips

Double Angles—LLBB

F_y = 36 ksi

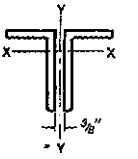

2L4 LLBB

Shape			2L4×3½×								No. of connectors[a]
			½		⅜		5/16[c]		¼[c]		
lb/ft			23.8		18.2		15.4		12.4		
Design			P_n/Ω_c ASD	$\phi_c P_n$ LRFD	P_n/Ω_c ASD	$\phi_c P_n$ LRFD	P_n/Ω_c ASD	$\phi_c P_n$ LRFD	P_n/Ω_c ASD	$\phi_c P_n$ LRFD	
Effective length, KL (ft), with respect to indicated axis	X-X Axis	0	151	227	116	174	96.7	145	71.6	108	b
		2	148	222	113	170	94.9	143	70.3	106	
		4	139	209	107	161	89.5	135	66.7	100	
		6	126	189	97.0	146	81.3	122	61.2	92.0	
		8	109	165	84.7	127	71.0	107	54.2	81.4	
		10	91.4	137	71.1	107	59.6	89.6	46.3	69.6	
		12	73.3	110	57.5	86.4	48.2	72.4	38.2	57.5	
		14	56.4	84.8	44.6	67.0	37.4	56.3	30.5	45.8	
		16	43.2	64.9	34.1	51.3	28.7	43.1	23.6	35.4	
		18	34.1	51.3	27.0	40.6	22.7	34.0	18.6	28.0	
		20	27.6	41.5	21.9	32.8	18.3	27.6	15.1	22.7	
	Y-Y Axis	0	151	227	116	174	96.7	145	71.6	108	2
		2	143	215	105	158	79.6	120	54.6	82.1	
		4	138	207	102	153	78.8	118	54.2	81.4	
		6	130	196	95.9	144	76.7	115	53.1	79.8	
		8	117	176	86.3	130	70.9	107	50.2	75.5	
		10	103	156	76.6	115	63.2	95.0	45.9	69.1	
		12	89.2	134	66.1	99.3	54.3	81.6	40.4	60.7	
		14	74.7	112	55.4	83.2	45.1	67.9	34.2	51.5	
		16	60.8	91.4	45.1	67.7	36.3	54.6	28.2	42.3	
		18	51.0	76.7	37.8	56.8	30.5	45.8	23.8	35.7	3
		20	41.4	62.3	30.7	46.2	24.9	37.4	19.5	29.3	
		22	34.3	51.6	25.5	38.3	20.7	31.1	16.3	24.5	
		24	28.9	43.4	21.5	32.3	17.5	26.2	13.8	20.7	
		26	24.6	37.0							
Properties of 2 angles—⅜ in. back to back											
A_g, in.²			7.00		5.36		4.50		3.64		
r_x, in.			1.23		1.25		1.25		1.26		
r_y, in.			1.57		1.55		1.53		1.52		
Properties of single angle											
r_z, in.			0.716		0.719		0.721		0.723		

ASD	LRFD
Ω_c = 1.67	ϕ_c = 0.90

[a] For Y-Y axis, welded or pretensioned bolted intermediate connectors must be used.
[b] For required number of intermediate connectors, see the discussion of Table 4-8.
[c] Shape is slender for compression with F_y = 36 ksi.
Note: Heavy line indicates KL/r equal to or greater than 200.

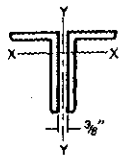

2L4 LLBB

Table 4-9 (continued)
Available Strength in Axial Compression, kips
Double Angles—LLBB

F_y = 36 ksi

Shape			2L4×3×										No. of connectors[a]
			5/8		1/2		3/8		5/16[c]		1/4[c]		
lb/ft			27.2		22.2		17.0		14.4		11.6		
Design			P_n/Ω_c ASD	$\phi_c P_n$ LRFD	P_n/Ω_c ASD	$\phi_c P_n$ LRFD	P_n/Ω_c ASD	$\phi_c P_n$ LRFD	P_n/Ω_c ASD	$\phi_c P_n$ LRFD	P_n/Ω_c ASD	$\phi_c P_n$ LRFD	
Effective length, KL (ft), with respect to indicated axis	X-X Axis	0	172	259	140	211	107	161	89.8	135	66.5	99.9	
		2	169	253	137	206	105	158	88.2	133	65.8	98.2	
		4	159	239	129	195	99.5	149	83.3	125	62.0	93.3	
		6	144	216	117	176	90.4	136	75.9	114	56.9	85.6	
		8	125	188	102	154	79.1	119	66.6	100	50.5	75.9	
		10	104	157	85.6	129	66.6	100	56.2	84.5	43.3	65.1	
		12	83.6	126	68.9	104	54.0	81.1	45.8	68.8	35.8	53.9	b
		14	64.3	96.6	53.2	80.0	42.1	63.3	35.9	53.9	28.7	43.1	
		16	49.2	74.0	40.8	61.2	32.2	48.5	27.5	41.3	22.2	33.4	
		18	38.9	58.5	32.2	48.4	25.5	38.3	21.7	32.6	17.6	26.4	
		20	31.5	47.4	26.1	39.2	20.6	31.0	17.6	26.4	14.2	21.4	
	Y-Y Axis	0	172	259	140	211	107	161	89.8	135	66.5	99.9	
		2	164	247	131	198	96.5	145	75.3	113	52.1	78.2	
		4	157	235	125	188	91.9	138	73.8	111	51.1	76.9	
		6	144	217	115	173	84.7	127	69.7	105	49.0	73.6	
		8	125	188	99.2	149	73.2	110	60.8	91.4	43.8	65.9	
		10	106	159	83.7	126	61.8	92.9	51.1	76.8	37.6	56.5	2
		12	86.3	130	67.9	102	50.1	75.4	41.1	61.7	30.8	46.3	
		14	67.9	102	52.9	79.5	39.0	58.5	31.6	47.5	24.1	36.3	
		16	54.9	82.4	42.7	64.1	31.4	47.3	24.5	36.9	18.9	28.4	
		18	43.4	65.3	33.8	50.8	25.0	37.5	19.5	29.4	15.1	22.7	
		20	35.2	52.9	27.4	41.2	20.3	30.5	15.9	23.9	12.4	18.6	
		22	29.1	43.8	22.7	34.1							3
Properties of 2 angles—3/8 in. back to back													
A_g, in.^{2}			7.98		6.50		4.98		4.18		3.38		
r_x, in.			1.23		1.24		1.26		1.27		1.27		
r_y, in.			1.35		1.32		1.30		1.29		1.27		
Properties of single angle													
r_z, in.			0.631		0.633		0.636		0.638		0.639		

ASD	LRFD
Ω_c = 1.67	ϕ_c = 0.90

[a] For Y-Y axis, welded or pretensioned bolted intermediate connectors must be used.
[b] For required number of intermediate connectors, see the discussion of Table 4-8.
[c] Shape is slender for compression with F_y = 36 ksi.
Note: Heavy line indicates KL/r equal to or greater than 200.

Table 4-9 (continued)

Available Strength in Axial Compression, kips

Double Angles—LLBB

F_y = 36 ksi

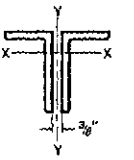

2L3½ LLBB

Shape			2L3½×3×										No. of connectors[a]
			1/2		7/16		3/8		5/16		1/4[c]		
lb/ft			20.4		18.2		15.8		13.2		10.8		
Design			P_n/Ω_c ASD	$\phi_c P_n$ LRFD	P_n/Ω_c ASD	$\phi_c P_n$ LRFD	P_n/Ω_c ASD	$\phi_c P_n$ LRFD	P_n/Ω_c ASD	$\phi_c P_n$ LRFD	P_n/Ω_c ASD	$\phi_c P_n$ LRFD	
Effective length, KL (ft), with respect to indicated axis	X-X Axis	0	130	196	115	173	100	150	84.1	126	65.7	98.8	b
		2	127	191	112	169	97.5	147	82.0	123	64.2	96.4	
		4	117	176	104	156	90.3	136	75.9	114	59.7	89.7	
		6	103	154	91.1	137	79.5	119	66.8	100	52.9	79.5	
		8	85.2	128	75.9	114	66.5	99.9	55.9	84.0	44.6	67.1	
		10	67.2	101	60.1	90.3	52.8	79.4	44.4	66.8	35.9	54.0	
		12	50.1	75.3	45.2	67.9	39.9	60.0	33.5	50.4	27.5	41.4	
		14	36.8	55.4	33.2	49.9	29.4	44.1	24.7	37.1	20.4	30.6	
		16	28.2	42.4	25.4	38.2	22.5	33.8	18.9	28.4	15.6	23.4	
		18			20.1	30.2	17.8	26.7	14.9	22.4	12.3	18.5	
	Y-Y Axis	0	130	196	115	173	100	150	84.1	126	65.7	98.8	2
		2	124	187	109	163	92.7	139	76.5	113	52.8	79.4	
		4	119	178	104	156	88.5	133	72.1	108	52.1	78.3	
		6	110	165	95.9	144	81.9	123	66.7	100	50.1	75.3	
		8	94.9	143	83.0	125	70.9	107	57.9	87.0	44.8	67.3	
		10	80.7	121	70.5	106	60.3	90.7	49.2	74.0	38.4	57.7	
		12	66.2	99.5	57.8	86.8	49.4	74.2	40.3	60.5	31.4	47.2	
		14	54.8	82.4	47.7	71.8	38.9	58.5	31.6	47.5	24.6	37.0	
		16	42.5	63.9	37.0	55.6	31.6	47.4	25.6	38.5	20.1	30.2	3
		18	33.7	50.6	29.3	44.0	25.0	37.6	20.4	30.6	16.0	24.1	
		20	27.3	41.0	23.8	35.7	20.3	30.6	16.6	24.9	13.1	19.7	
		22	22.6	34.0	19.7	29.6	16.8	25.3	13.7	20.6	10.9	16.3	
Properties of 2 angles—3/8 in. back to back													
A_g, in.^{2}			6.04		5.34		4.64		3.90		3.16		
r_x, in.			1.07		1.08		1.09		1.09		1.10		
r_y, in.			1.37		1.36		1.35		1.33		1.32		
Properties of single angle													
r_z, in.			0.618		0.620		0.622		0.624		0.628		

ASD	LRFD
Ω_c = 1.67	ϕ_c = 0.90

[a] For Y-Y axis, welded or pretensioned bolted intermediate connectors must be used.
[b] For required number of intermediate connectors, see the discussion of Table 4-8.
[c] Shape is slender for compression with F_y = 36 ksi.
Note: Heavy line indicates KL/r equal to or greater than 200.

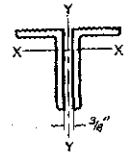

2L3$^1/_2$ LLBB

Table 4-9 (continued)
Available Strength in Axial Compression, kips
Double Angles—LLBB

F_y = 36 ksi

Shape			2L3$^1/_2$×2$^1/_2$×								No. of connectors[a]
			$^1/_2$		$^3/_8$		$^5/_{16}$		$^1/_4$[c]		
lb/ft			18.8		14.4		12.2		9.80		
Design			P_n/Ω_c ASD	$\phi_c P_n$ LRFD	P_n/Ω_c ASD	$\phi_c P_n$ LRFD	P_n/Ω_c ASD	$\phi_c P_n$ LRFD	P_n/Ω_c ASD	$\phi_c P_n$ LRFD	
Effective length, KL (ft), with respect to indicated axis	X-X Axis	0	119	179	91.4	137	77.2	116	60.3	90.7	
		1	119	178	90.8	137	76.7	115	60.0	90.1	
		2	116	175	89.1	134	75.3	113	58.9	88.6	
		3	113	169	86.4	130	73.0	110	57.2	86.0	
		4	108	162	82.7	124	69.9	105	55.0	82.6	
		5	102	153	78.2	117	66.2	99.5	52.1	78.4	
		6	94.5	142	72.9	110	61.8	92.9	48.9	73.5	
		7	86.9	131	67.2	101	57.1	85.8	45.3	68.1	
		8	78.8	118	61.2	92.0	52.1	78.2	41.5	62.4	
		9	70.5	106	55.0	82.7	46.9	70.5	37.6	56.5	b
		10	62.3	93.7	48.8	73.4	41.7	62.7	33.7	50.6	
		11	54.4	81.8	42.8	64.4	36.7	55.1	29.8	44.8	
		12	46.8	70.4	37.1	55.7	31.8	47.8	26.0	39.2	
		13	39.9	60.0	31.7	47.6	27.2	40.9	22.5	33.8	
		14	34.4	51.7	27.3	41.1	23.5	35.3	19.4	29.1	
		15	30.0	45.1	23.8	35.8	20.5	30.8	16.9	25.4	
		16	26.3	39.6	20.9	31.4	18.0	27.0	14.8	22.3	
		17	23.3	35.1	18.5	27.9	15.9	23.9	13.1	19.7	
		18	20.8	31.3	16.5	24.8	14.2	21.4	11.7	17.6	
	Y-Y Axis	0	119	179	91.4	137	77.2	116	60.3	90.7	
		1	114	172	84.8	127	69.1	104	49.5	74.4	
		2	113	169	83.4	125	67.9	102	49.2	74.0	
		3	109	164	81.0	122	66.0	99.2	48.6	73.1	
		4	105	158	77.8	117	63.5	95.4	47.5	71.6	
		5	99.8	150	73.9	111	60.3	90.6	46.0	69.1	
		6	91.3	137	67.7	102	55.2	83.0	42.8	64.3	
		7	83.9	126	62.2	93.4	50.8	76.3	39.5	59.3	
		8	76.1	114	56.4	84.7	46.0	69.1	35.8	53.8	
		9	68.1	102	50.4	75.7	41.1	61.7	32.0	48.0	2
		10	60.1	90.4	44.4	66.8	36.2	54.3	28.1	42.2	
		11	52.4	78.7	38.6	58.0	31.4	47.1	24.3	36.6	
		12	47.2	70.9	33.0	49.6	26.8	40.2	20.8	31.2	
		13	40.3	60.6	29.6	44.5	22.9	34.4	17.9	26.8	
		14	34.8	52.4	25.6	38.5	19.8	29.8	15.5	23.3	
		15	30.4	45.7	22.4	33.6	18.1	27.3	13.6	20.4	
		16	26.7	40.2	19.7	29.6	16.0	24.0	12.0	18.1	
		17	23.7	35.6	17.5	26.3	14.2	21.3	10.7	16.1	
		18	21.2	31.8	15.6	23.4	12.7	19.1	9.56	14.4	
											3
Properties of 2 angles—$^3/_8$ in. back to back											
A_g, in.^{2}			5.54		4.24		3.58		2.90		
r_x, in.			1.08		1.10		1.11		1.12		
r_y, in.			1.13		1.11		1.09		1.08		
Properties of single angle											
r_z, in.			0.532		0.535		0.538		0.541		

ASD: Ω_c = 1.67 LRFD: ϕ_c = 0.90

[a] For Y-Y axis, welded or pretensioned bolted intermediate connectors must be used.
[b] For required number of intermediate connectors, see the discussion of Table 4-8.
[c] Shape is slender for compression with F_y = 36 ksi.
Note: Heavy line indicates KL/r equal to or greater than 200.

F_y = 36 ksi

Table 4-9 (continued)
Available Strength in Axial Compression, kips
Double Angles—LLBB

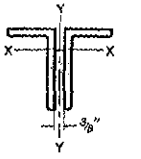

2L3 LLBB

Shape			2L3×2$^1/_2$×												No. of connectors[a]
			$^1/_2$		$^7/_{16}$		$^3/_8$		$^5/_{16}$		$^1/_4$		$^3/_{16}$[c]		
lb/ft			17.0		15.2		13.2		11.2		9.00		6.78		
Design			P_n/Ω_c ASD	$\phi_c P_n$ LRFD	P_n/Ω_c ASD	$\phi_c P_n$ LRFD	P_n/Ω_c ASD	$\phi_c P_n$ LRFD	P_n/Ω_c ASD	$\phi_c P_n$ LRFD	P_n/Ω_c ASD	$\phi_c P_n$ LRFD	P_n/Ω_c ASD	$\phi_c P_n$ LRFD	
Effective length, KL (ft), with respect to indicated axis	X-X Axis	0	108	162	95.7	144	83.2	125	70.3	106	56.9	85.5	39.3	59.1	
		1	107	161	94.9	143	82.5	124	69.7	105	56.4	84.8	39.0	58.6	
		2	104	156	92.3	139	80.3	121	67.9	102	55.0	82.7	38.1	57.3	
		3	99.3	149	88.3	133	76.8	115	65.0	97.6	52.7	79.2	36.7	55.1	
		4	93.1	140	82.9	125	72.2	109	61.1	91.9	49.6	74.6	34.8	52.2	
		5	85.7	129	76.4	115	66.6	100	56.5	84.9	45.9	69.0	32.4	48.7	
		6	77.5	117	69.2	104	60.4	90.8	51.3	77.1	41.8	62.8	29.8	44.8	
		7	68.8	103	61.5	92.5	53.9	80.9	45.8	68.9	37.4	56.2	26.9	40.5	
		8	60.0	90.2	53.8	80.8	47.1	70.8	40.2	60.4	32.9	49.4	24.0	36.1	b
		9	51.3	77.2	46.1	69.3	40.5	60.9	34.7	52.1	28.4	42.7	21.1	31.7	
		10	43.2	64.9	38.9	58.4	34.2	51.5	29.4	44.1	24.1	36.3	18.2	27.3	
		11	35.7	53.7	32.2	48.4	28.4	42.7	24.4	36.7	20.1	30.2	15.5	23.3	
		12	30.0	45.1	27.1	40.7	23.9	35.9	20.5	30.9	16.9	25.4	13.0	19.5	
		13	25.6	38.4	23.1	34.7	20.4	30.6	17.5	26.3	14.4	21.7	11.1	16.7	
		14	22.1	33.1	19.9	29.9	17.6	26.4	15.1	22.7	12.4	18.7	9.55	14.4	
		15	19.2	28.9	17.3	26.0	15.3	23.0	13.1	19.7	10.8	16.3	8.32	12.5	
	Y-Y Axis	0	108	162	95.7	144	83.2	125	70.3	106	56.9	85.5	39.3	59.1	
		1	105	158	92.3	139	79.3	119	65.4	98.3	50.6	76.0	30.4	45.6	
		2	103	155	90.8	137	78.0	117	64.4	96.8	49.8	74.8	30.2	45.5	
		3	100	151	88.4	133	75.9	114	62.7	94.2	48.5	72.9	30.0	45.1	
		4	96.8	145	85.1	128	73.0	110	60.3	90.7	46.7	70.3	29.6	44.5	
		5	92.3	139	81.0	122	69.5	104	57.4	86.3	44.6	67.0	29.0	43.5	
		6	87.0	131	74.2	111	63.6	95.7	52.7	79.2	41.0	61.6	27.5	41.4	2
		7	79.4	119	68.4	103	58.6	88.2	48.6	73.0	37.8	56.8	25.9	38.9	
		8	72.8	109	62.2	93.5	53.3	80.2	44.2	66.4	34.4	51.7	23.9	35.9	
		9	66.0	99.2	55.9	84.0	47.9	72.0	39.7	59.6	30.9	46.4	21.6	32.5	
		10	59.1	88.8	49.6	74.5	42.4	63.8	35.1	52.8	27.4	41.1	19.3	29.0	
		11	52.3	78.6	43.4	65.2	37.1	55.8	30.7	46.2	23.9	35.9	17.0	25.5	
		12	45.7	68.7	39.4	59.2	33.6	50.6	27.8	41.8	21.5	32.4	14.7	22.1	
		13	39.4	59.3	33.9	50.9	28.9	43.4	23.8	35.8	18.5	27.8	13.3	20.0	
		14	34.0	51.2	29.2	43.9	24.9	37.5	20.6	31.0	16.0	24.1	11.6		
		15	29.7	44.6	25.5	38.3	21.8	32.7	18.0	27.1	14.0	21.0	10.2	15.3	
		16	26.1	39.2	22.4	33.7	19.1	28.8	15.8	23.8	12.3	18.5	9.00	13.5	3
		17	23.1	34.8	19.9	29.9	17.0	25.5	14.1	21.1	11.0	16.5	8.01	12.0	
		18	20.7	31.0	17.7	26.7	15.2	22.8	12.6	18.9	9.79	14.7	7.18	10.8	
		19	18.5	27.9	15.9	24.0	13.6	20.5	11.3	17.0					
Properties of 2 angles—$^3/_8$ in. back to back															
A_g, in.^{2}			5.00		4.44		3.86		3.26		2.64		2.00		
r_x, in.			0.910		0.917		0.924		0.932		0.940		0.947		
r_y, in.			1.18		1.16		1.15		1.14		1.12		1.11		
Properties of single angle															
r_z, in.			0.516		0.516		0.517		0.518		0.520		0.521		

ASD: Ω_c = 1.67 LRFD: ϕ_c = 0.90

[a] For Y-Y axis, welded or pretensioned bolted intermediate connectors must be used.
[b] For required number of intermediate connectors, see the discussion of Table 4-8.
[c] Shape is slender for compression with F_y = 36 ksi.
Note: Heavy line indicates KL/r equal to or greater than 200.

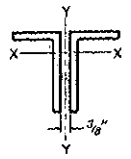

2L3 LLBB

Table 4-9 (continued)
Available Strength in Axial Compression, kips
Double Angles—LLBB

F_y = 36 ksi

Shape			2L3×2× 1/2		3/8		5/16		1/4		3/16[c]		No. of connectors[a]
lb/ft			15.4		11.8		10.0		8.20		6.14		
Design			P_n/Ω_c ASD	$\phi_c P_n$ LRFD	P_n/Ω_c ASD	$\phi_c P_n$ LRFD	P_n/Ω_c ASD	$\phi_c P_n$ LRFD	P_n/Ω_c ASD	$\phi_c P_n$ LRFD	P_n/Ω_c ASD	$\phi_c P_n$ LRFD	
Effective length, KL (ft), with respect to indicated axis	X-X Axis	0	97.4	146	75.4	113	63.8	95.9	51.7	77.8	36.0	54.1	
		1	96.6	145	74.8	112	63.3	95.1	51.3	77.1	35.7	53.7	
		2	94.0	141	72.9	110	61.7	92.7	50.0	75.2	34.9	52.5	
		3	89.9	135	69.8	105	59.1	88.8	48.0	72.1	33.6	50.6	
		4	84.5	127	65.7	98.8	55.7	83.7	45.3	68.0	31.9	48.0	
		5	78.0	117	60.8	91.4	51.6	77.6	42.0	63.1	29.8	44.8	
		6	70.7	106	55.3	83.1	47.0	70.7	38.3	57.6	27.5	41.3	
		7	62.9	94.6	49.4	74.3	42.1	63.3	34.4	51.7	24.9	37.5	
		8	55.1	82.8	43.4	65.3	37.1	55.7	30.3	45.6	22.3	33.5	b
		9	47.3	71.1	37.5	56.3	32.1	48.2	26.3	39.5	19.6	29.5	
		10	39.9	60.0	31.8	47.8	27.3	41.0	22.5	33.7	17.0	25.6	
		11	33.1	49.8	26.5	39.8	22.8	34.3	18.8	28.3	14.5	21.9	
		12	27.9	41.9	22.3	33.5	19.2	28.8	15.8	23.7	12.3	18.4	
		13	23.7	35.7	19.0	28.5	16.3	24.5	13.5	20.2	10.4	15.7	
		14	20.5	30.8	16.4	24.6	14.1	21.2	11.6	17.4	9.00	13.5	
		15	17.8	26.8	14.3	21.4	12.3	18.4	10.1	15.2	7.84	11.8	
		16									6.89	10.4	
	Y-Y Axis	0	97.4	146	75.4	113	63.8	95.9	51.7	77.8	36.0	54.1	
		1	94.0	141	71.1	107	58.6	88.1	45.3	68.0	28.6	43.0	
		2	91.7	138	69.3	104	57.1	85.8	44.1	66.3	28.3	42.6	
		3	88.0	132	66.4	99.7	54.7	82.2	42.3	63.6	27.8	41.7	
		4	83.0	125	62.4	93.8	51.4	77.3	39.9	59.9	26.8	40.3	
		5	74.8	112	56.1	84.4	46.3	69.5	36.0	54.1	24.8	37.2	
		6	67.3	101	50.3	75.7	41.5	62.3	32.3	48.5	22.5	33.8	
		7	59.5	89.4	44.2	66.5	36.4	54.7	28.4	42.6	19.9	29.9	2
		8	51.5	77.4	38.1	57.2	31.3	47.0	24.4	36.6	17.2	25.8	
		9	43.7	65.7	32.1	48.2	26.3	39.5	20.5	30.8	14.5	21.8	
		10	38.3	57.6	27.8	41.8	22.7	34.1	17.6	26.5	12.0	18.1	
		11	31.7	47.7	23.0	34.6	18.8	28.3	14.7	22.0	10.1	15.2	
		12	26.7	40.1	19.4	29.2	15.9	23.9	12.4	18.6	8.57	12.9	
		13	22.8	34.2	16.6	24.9	13.6	20.4	10.6	15.9	7.36	11.1	
		14	19.7	29.5	14.3	21.5	11.7	17.6	9.17	13.8	6.39	9.60	
		15	17.1	25.8	12.5	18.8							3
Properties of 2 angles—3/8 in. back to back													
A_g, in.^{2}			4.52		3.50		2.96		2.40		1.83		
r_x, in.			0.922		0.937		0.945		0.953		0.961		
r_y, in.			0.940		0.911		0.897		0.883		0.869		
Properties of single angle													
r_z, in.			0.425		0.426		0.428		0.431		0.435		

ASD	LRFD
Ω_c = 1.67	ϕ_c = 0.90

[a] For Y-Y axis, welded or pretensioned bolted intermediate connectors must be used.
[b] For required number of intermediate connectors, see the discussion of Table 4-8.
[c] Shape is slender for compression with F_y = 36 ksi.
Note: Heavy line indicates KL/r equal to or greater than 200.

Table 4-9 (continued)

Available Strength in Axial Compression, kips

Double Angles—LLBB

F_y = 36 ksi

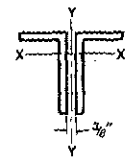

2L2½ LLBB

Shape			2L2½×2×								No. of connectors[a]
			3/8		5/16		1/4		3/16[c]		
lb/ft			10.6		9.00		7.24		5.50		
Design			P_n/Ω_c ASD	$\phi_c P_n$ LRFD	P_n/Ω_c ASD	$\phi_c P_n$ LRFD	P_n/Ω_c ASD	$\phi_c P_n$ LRFD	P_n/Ω_c ASD	$\phi_c P_n$ LRFD	
Effective length, KL (ft), with respect to indicated axis	X-X Axis	0	66.8	100	56.9	85.5	46.1	69.3	34.8	52.2	
		1	66.0	99.2	56.2	84.5	45.6	68.5	34.3	51.6	
		2	63.5	95.4	54.1	81.3	43.9	66.0	33.1	49.8	
		3	59.5	89.4	50.8	76.3	41.3	62.0	31.2	46.9	
		4	54.3	81.7	46.5	69.9	37.8	56.9	28.7	43.1	
		5	48.4	72.7	41.5	62.3	33.8	50.9	25.8	38.8	
		6	42.0	63.1	36.1	54.2	29.5	44.4	22.6	34.0	b
		7	35.5	53.3	30.6	46.0	25.1	37.8	19.4	29.1	
		8	29.2	43.9	25.3	38.1	20.9	31.4	16.2	24.3	
		9	23.4	35.2	20.4	30.6	16.9	25.3	13.2	19.8	
		10	19.0	28.5	16.5	24.8	13.7	20.5	10.7	16.1	
		11	15.7	23.6	13.6	20.5	11.3	17.0	8.83	13.3	
		12	13.2	19.8	11.5	17.2	9.49	14.3	7.42	11.2	
		13					8.08	12.1	6.32	9.50	
	Y-Y Axis	0	66.8	100	56.9	85.5	46.1	69.3	34.8	52.2	
		1	64.4	96.7	54.0	81.1	42.4	63.8	28.4	42.7	
		2	62.8	94.4	52.7	79.2	41.4	62.3	28.2	42.3	
		3	60.4	90.7	50.6	76.0	39.8	59.8	27.7	41.7	
		4	57.0	85.7	47.8	71.8	37.6	56.5	26.9	40.4	2
		5	53.1	79.7	43.1	64.8	34.0	51.1	24.8	37.3	
		6	47.4	71.3	38.9	58.5	30.7	46.1	22.6	33.9	
		7	42.3	63.6	34.4	51.7	27.1	40.8	20.0	30.0	
		8	37.1	55.7	29.9	44.9	23.5	35.4	17.3	25.9	
		9	31.9	48.0	25.4	38.2	20.0	30.1	14.6	21.9	
		10	27.0	40.6	22.3	33.5	17.5	26.3	12.7	19.0	
		11	22.4	33.7	18.5	27.8	14.5	21.8	10.6	15.9	
		12	18.9	28.4	15.6	23.4	12.3	18.4	8.97	13.5	3
		13	16.1	24.2	13.3	20.0	10.5	15.7	7.68	11.5	
		14	13.9	20.9	11.5	17.3	9.05	13.6	6.66	10.0	
		15	12.1	18.2	10.0	15.1	7.89	11.9	5.82	8.75	
Properties of 2 angles—3/8 in. back to back											
A_g, in.^{2}			3.10		2.64		2.14		1.64		
r_x, in.			0.766		0.774		0.782		0.790		
r_y, in.			0.957		0.943		0.930		0.916		
Properties of single angle											
r_z, in.			0.419		0.420		0.423		0.426		

ASD	LRFD
Ω_c = 1.67	ϕ_c = 0.90

[a] For Y-Y axis, welded or pretensioned bolted intermediate connectors must be used.
[b] For required number of intermediate connectors, see the discussion of Table 4-8.
[c] Shape is slender for compression with F_y = 36 ksi.
Note: Heavy line indicates KL/r equal to or greater than 200.

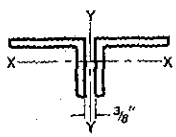

2L8 SLBB

Table 4-10
Available Strength in Axial Compression, kips
Double Angles—SLBB

F_y = 36 ksi

Shape			2L8×6× 1		7/8		3/4		5/8		9/16[c]		1/2[c]		7/16[c]		No. of connectors[a]
lb/ft			88.4		78.2		67.6		57.0		51.4		46.0		40.4		
Design			P_n/Ω_c ASD	$\phi_c P_n$ LRFD	P_n/Ω_c ASD	$\phi_c P_n$ LRFD	P_n/Ω_c ASD	$\phi_c P_n$ LRFD	P_n/Ω_c ASD	$\phi_c P_n$ LRFD	P_n/Ω_c ASD	$\phi_c P_n$ LRFD	P_n/Ω_c ASD	$\phi_c P_n$ LRFD	P_n/Ω_c ASD	$\phi_c P_n$ LRFD	
Effective length, KL (ft), with respect to indicated axis	X-X Axis	0	565	849	496	745	431	648	361	543	314	472	267	402	220	330	
		4	542	815	476	716	414	623	347	522	303	455	258	388	213	320	
		6	515	774	453	681	394	593	331	498	289	435	247	372	205	308	
		8	479	720	422	635	368	553	309	465	271	408	233	350	194	291	
		10	437	657	386	580	337	506	284	426	250	375	215	324	180	271	
		12	391	587	346	520	302	454	255	383	226	339	196	295	165	248	
		14	342	514	304	456	265	399	225	338	200	301	175	263	149	224	
		16	293	441	261	393	229	344	195	293	175	262	154	231	132	199	b
		18	246	370	220	331	193	291	165	248	149	225	133	200	115	174	
		20	202	304	182	273	160	240	137	206	126	189	113	170	99.2	149	
		22	167	251	150	226	132	199	114	171	104	156	94.0	141	83.8	126	
		24	140	211	126	190	111	167	95.4	143	87.3	131	79.0	119	70.5	106	
		26	120	180	108	162	94.6	142	81.3	122	74.4	112	67.3	101	60.0	90.2	
		28	103	155	92.7	139	81.5	123	70.1	105	64.1	96.4	58.0	87.2	51.8	77.8	
		30													45.1	67.8	
	Y-Y Axis	0	565	849	496	745	431	648	361	543	314	472	267	402	220	330	
		4	552	829	481	723	414	622	300	451	253	380	206	310	160	241	
		6	546	821	476	716	410	616	300	451	252	379	206	310	160	241	
		8	538	809	469	705	404	607	300	450	252	379	206	309	160	241	
		10	528	793	461	692	396	595	299	449	251	378	205	309	160	240	
		12	516	775	450	676	387	582	298	447	251	377	205	308	159	240	
		16	486	731	424	638	365	548	292	439	247	371	203	304	158	238	3
		20	438	659	382	574	329	494	272	408	234	352	195	293	154	232	
		24	394	593	344	517	296	445	246	369	214	322	182	273	147	221	
		28	348	523	303	456	261	392	217	326	191	286	164	246	135	203	
		32	301	453	262	394	225	339	187	281	166	249	144	216	120	181	
		36	256	385	223	335	191	287	158	238	141	212	123	185	105	157	
		40	222	334	193	290	165	248	136	205	122	183	104	156	89.3	134	
		44	184	276	160	240	137	205	113	170	101	152	89.7	135	77.6	117	
		48	155	232	134	202	115	173	95.1	143	85.5	128	75.7	114	65.7	98.7	
		52	132	198	115	172	98.1	147	81.2	122	73.0	110	64.7	97.3	56.3	84.6	4
		56	114	171	98.8	148	84.6	127	70.1	105	63.1	94.8	56.0	84.1	48.7	73.2	
		60	99.1	149	86.1	129	73.8	111	61.2	91.9	55.0	82.7	48.9	73.4	42.5	63.9	
Properties of 2 angles—3/8 in. back to back																	
A_g, in.^{2}			26.2		23.0		20.0		16.8		15.2		13.6		12.0		
r_x, in.			1.72		1.74		1.75		1.77		1.78		1.79		1.80		
r_y, in.			3.77		3.75		3.72		3.70		3.69		3.68		3.66		
Properties of single angle																	
r_z, in.			1.28		1.28		1.29		1.29		1.30		1.30		1.31		

ASD	LRFD
Ω_c = 1.67	ϕ_c = 0.90

[a] For Y-Y axis, welded or pretensioned bolted intermediate connectors must be used.
[b] For required number of intermediate connectors, see the discussion of Table 4-8.
[c] Shape is slender for compression with F_y = 36 ksi.
Note: Heavy line indicates KL/r equal to or greater than 200.

Table 4-10 (continued)

Available Strength in Axial Compression, kips

Double Angles—SLBB

F_y = 36 ksi

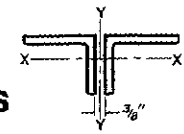

2L8 SLBB

Shape			2L8×4× 1		7/8		3/4		5/8		9/16[c]		1/2[c]		7/16[c]		No. of connectors[a]
lb/ft			74.8		66.2		57.4		48.4		43.8		39.2		34.4		
Design			P_n/Ω_c	$\phi_c P_n$	P_n/Ω_c	$\phi_c P_n$	P_n/Ω_c	$\phi_c P_n$	P_n/Ω_c	$\phi_c P_n$	P_n/Ω_c	$\phi_c P_n$	P_n/Ω_c	$\phi_c P_n$	P_n/Ω_c	$\phi_c P_n$	
			ASD	LRFD	ASD	LRFD	ASD	LRFD	ASD	LRFD	ASD	LRFD	ASD	LRFD	ASD	LRFD	
Effective length, KL (ft), with respect to indicated axis	X-X Axis	0	479	719	423	635	366	551	307	462	269	404	228	343	187	281	
		4	427	642	378	568	328	493	276	415	243	365	207	312	171	258	
		6	370	556	328	493	286	430	241	363	214	321	184	277	154	231	
		8	303	455	270	405	236	355	200	300	179	269	156	235	132	199	
		10	234	352	210	315	184	277	157	236	142	214	126	189	109	163	b
		12	171	257	154	231	136	204	116	175	108	162	97.1	146	85.6	129	
		14	125	189	113	170	99.8	150	85.6	129	79.3	119	72.1	108	64.5	97.0	
		16	96.0	144	86.4	130	76.4	115	65.5	98.5	60.7	91.2	55.2	82.9	49.4	74.3	
		18											43.6	65.5	39.0	58.7	
	Y-Y Axis	0	479	719	423	635	366	551	307	462	269	404	228	343	187	281	
		4	474	712	417	627	361	542	258	388	218	328	178	268	139	209	
		6	469	705	413	621	358	537	258	387	218	328	178	268	139	209	
		8	463	696	408	614	353	531	258	387	218	328	178	268	139	209	
		10	456	685	402	604	347	522	258	387	218	328	178	268	139	209	
		12	447	672	394	592	340	511	257	387	218	328	178	268	139	209	
		16	425	638	374	562	323	485	256	385	217	327	178	267	139	208	
		20	389	585	343	515	296	445	245	369	215	323	176	265	138	207	
		24	356	535	313	471	270	406	225	339	198	298	168	253	135	203	
		28	320	481	282	423	243	365	202	304	179	269	154	231	127	192	
		32	283	426	249	374	214	322	179	268	159	239	137	206	115	174	6
		36	247	371	217	325	186	280	155	233	138	208	120	181	102	154	
		40	211	318	185	279	159	239	132	199	119	179	104	156	89.3	134	
		44	182	274	160	240	137	205	111	166	100	150	88.3	133	76.8	115	
		48	153	230	134	202	115	172	93.0	140	84.1	126	74.3	112	64.9	97.6	
		52	131	196	114	172	97.8	147	79.2	119	71.7	108	63.4	95.3	55.4	83.3	
		56	113	169	98.6	148	84.4	127	68.4	103	61.9	93.0	54.7	82.2	47.8	71.9	
		60	98.1	147	85.9	129	73.5	110	61.0	91.7	53.9	81.0	47.7	71.7	41.7	62.7	
		64	86.3	130	75.5	113	64.6	97.1	53.6	80.6	47.4	71.3	41.9	63.0	36.7	55.1	
		68	76.4	115													7
Properties of 2 angles—3/8 in. back to back																	
A_g, in.^{2}			22.2		19.6		17.0		14.3		13.0		11.6		10.2		
r_x, in.			1.03		1.04		1.05		1.06		1.07		1.08		1.09		
r_y, in.			4.08		4.06		4.03		4.00		3.99		3.97		3.96		
Properties of single angle																	
r_z, in.			0.844		0.846		0.850		0.856		0.859		0.863		0.867		

ASD	LRFD
Ω_c = 1.67	ϕ_c = 0.90

[a] For Y-Y axis, welded or pretensioned bolted intermediate connectors must be used.
[b] For required number of intermediate connectors, see the discussion of Table 4-8.
[c] Shape is slender for compression with F_y = 36 ksi.
Note: Heavy line indicates KL/r equal to or greater than 200.

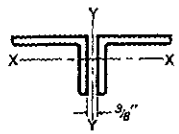

2L7 SLBB

Table 4-10 (continued)
Available Strength in Axial Compression, kips
Double Angles—SLBB

F_y = 36 ksi

Shape			2L7×4× 3/4		2L7×4× 5/8		2L7×4× 1/2[c]		2L7×4× 7/16[c]		2L7×4× 3/8[c]		No. of connectors[a]
lb/ft			52.4		44.2		35.8		31.4		27.2		
Design			P_n/Ω_c ASD	$\phi_c P_n$ LRFD	P_n/Ω_c ASD	$\phi_c P_n$ LRFD	P_n/Ω_c ASD	$\phi_c P_n$ LRFD	P_n/Ω_c ASD	$\phi_c P_n$ LRFD	P_n/Ω_c ASD	$\phi_c P_n$ LRFD	
Effective length, KL (ft), with respect to indicated axis	X-X Axis	0	334	502	280	421	218	328	182	274	145	218	
		4	301	453	254	381	199	299	167	251	134	201	
		6	264	397	224	336	176	265	149	224	121	181	
		8	220	331	188	282	149	225	126	192	105	157	
		10	174	262	150	225	121	181	105	158	87.2	131	
		12	131	197	114	171	92.9	140	82.3	124	69.7	105	b
		14	96.3	145	83.8	126	68.9	104	61.9	93.0	53.4	80.3	
		16	73.7	111	64.1	96.4	52.7	79.3	47.4	71.2	40.9	61.5	
		18	58.2	87.5	50.7	76.2	41.7	62.6	37.4	56.2	32.3	48.6	
	Y-Y Axis	0	334	502	280	421	218	328	182	274	145	218	
		4	328	493	273	411	179	269	142	214	107	161	
		6	324	487	270	406	179	269	142	214	107	161	
		8	318	479	265	399	179	268	142	214	107	160	
		10	311	468	260	390	178	268	142	214	107	160	
		12	303	455	253	380	178	267	142	213	106	160	
		16	283	425	236	354	176	264	141	212	105	159	
		20	251	378	209	315	163	245	135	203	104	156	
		24	222	334	185	278	145	218	122	184	97.9	147	5
		28	192	289	160	241	126	189	107	161	87.7	132	
		32	163	245	135	204	107	161	92.0	138	76.2	115	
		36	145	203	112	168	88.6	133	77.1	116	64.7	97.3	
		40	113	169	93.4	140	72.2	108	63.2	94.9	53.8	80.8	
		44	93.1	140	77.3	116	59.7	89.8	52.3	78.6	44.6	67.0	
		48	78.3	118	65.0	97.6	50.2	75.5	44.0	66.2	37.6	56.4	
		52	66.7	100	55.4	83.2	42.8	64.4	37.6	56.4	32.1	48.2	
		56	57.5	86.5	47.8	71.8	37.0	55.5	32.4	48.7	27.7	41.6	
													6
Properties of 2 angles—3/8 in. back to back													
A_g, in.^{2}			15.5		13.0		10.5		9.26		8.00		
r_x, in.			1.08		1.10		1.11		1.12		1.12		
r_y, in.			3.48		3.46		3.43		3.42		3.40		
Properties of single angle													
r_z, in.			0.855		0.860		0.866		0.869		0.873		

ASD	LRFD
$\Omega_c = 1.67$	$\phi_c = 0.90$

[a] For Y-Y axis, welded or pretensioned bolted intermediate connectors must be used.
[b] For required number of intermediate connectors, see the discussion of Table 4-8.
[c] Shape is slender for compression with $F_y = 36$ ksi.
Note: Heavy line indicates KL/r equal to or greater than 200.

Table 4-10 (continued)
Available Strength in Axial Compression, kips
Double Angles—SLBB

F_y = 36 ksi

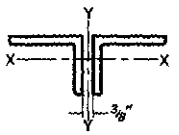

2L6 SLBB

Shape			2L6×4×								No. of connectors[a]
			7/8		3/4		5/8		9/16		
lb/ft			54.4		47.2		40.0		36.2		
Design			P_n/Ω_c ASD	$\phi_c P_n$ LRFD	P_n/Ω_c ASD	$\phi_c P_n$ LRFD	P_n/Ω_c ASD	$\phi_c P_n$ LRFD	P_n/Ω_c ASD	$\phi_c P_n$ LRFD	
Effective length, KL (ft), with respect to indicated axis	X-X Axis	0	345	518	300	450	252	379	229	343	b
		4	312	469	272	409	229	345	208	313	
		6	275	414	241	362	204	306	185	278	
		8	231	347	204	306	172	259	157	236	
		10	184	277	164	246	139	209	128	192	
		12	140	210	126	189	107	161	98.6	148	
		14	103	155	92.9	140	79.6	120	73.4	110	
		16	78.9	119	71.1	107	60.9	91.6	56.2	84.4	
		18	62.4	93.7	56.2	84.4	48.1	72.3	44.4	66.7	
	Y-Y Axis	0	345	518	300	450	252	379	229	343	4
		4	338	508	293	440	245	368	221	331	
		6	332	499	288	432	240	361	217	326	
		8	324	487	281	422	235	353	211	318	
		10	314	473	272	409	227	342	205	308	
		12	303	455	262	394	219	329	197	296	
		16	268	402	231	348	193	290	174	262	
		20	233	350	201	302	168	252	151	227	
		24	197	296	169	255	141	212	127	191	
		28	161	242	138	208	115	172	103	155	
		32	132	198	113	170	93.1	140	83.7	126	5
		36	104	156	89.2	134	73.6	111	66.2	99.5	
		40	84.3	127	72.3	109	59.7	89.7	53.7	80.7	
		44	69.7	105	59.8	89.8	49.3	74.2	44.4	66.7	
		48	58.6	88.0	50.2	75.5	41.5	62.3	37.3	56.1	
Properties of 2 angles—3/8 in. back to back											
A_g, in.^{2}			16.0		13.9		11.7		10.6		
r_x, in.			1.10		1.12		1.13		1.14		
r_y, in.			2.96		2.94		2.91		2.90		
Properties of single angle											
r_z, in.			0.854		0.856		0.859		0.861		

ASD	LRFD
Ω_c = 1.67	ϕ_c = 0.90

[a] For Y-Y axis, welded or pretensioned bolted intermediate connectors must be used.
[b] For required number of intermediate connectors, see the discussion of Table 4-8.
Note: Heavy line indicates *KL/r* equal to or greater than 200.

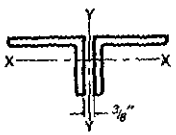

2L6 SLBB

Table 4-10 (continued)
Available Strength in Axial Compression, kips
Double Angles—SLBB

F_y = 36 ksi

Shape			2L6×4×								No. of connectors[a]
			1/2		7/16[c]		3/8[c]		5/16[c]		
lb/ft			32.4		28.6		24.6		20.6		
Design			P_n/Ω_c ASD	$\phi_c P_n$ LRFD	P_n/Ω_c ASD	$\phi_c P_n$ LRFD	P_n/Ω_c ASD	$\phi_c P_n$ LRFD	P_n/Ω_c ASD	$\phi_c P_n$ LRFD	
Effective length, KL (ft), with respect to indicated axis	X-X Axis	0	205	308	175	264	142	213	108	162	b
		4	187	280	160	241	131	197	100	151	
		6	166	249	143	216	118	177	91.5	138	
		8	141	212	123	184	102	154	80.5	121	
		10	114	172	100	151	84.9	128	68.3	103	
		12	88.4	133	78.5	118	67.7	102	55.8	83.9	
		14	65.7	98.8	58.9	88.5	51.7	77.8	44.0	66.2	
		16	50.3	75.7	45.1	67.8	39.6	59.5	33.8	50.8	
		18	39.8	59.8	35.6	53.5	31.3	47.0	26.7	40.2	
	Y-Y Axis	0	205	308	175	264	142	213	108	162	4
		4	196	295	143	215	110	166	77.9	117	
		6	193	289	143	215	110	165	77.8	117	
		8	188	283	143	215	110	165	77.7	117	
		10	182	274	142	214	109	165	77.5	116	
		12	175	263	141	212	109	164	77.2	116	
		16	155	233	132	198	105	157	75.7	114	
		20	134	202	116	174	94.4	142	71.4	107	
		24	113	170	97.7	147	80.8	121	63.3	95.1	
		28	91.8	138	79.7	120	66.7	100	53.5	80.4	
		32	72.2	108	62.8	94.4	53.3	80.1	43.8	65.9	5
		36	57.1	85.9	49.8	74.8	42.3	63.6	35.0	52.7	
		40	47.8	71.8	40.4	60.8	34.4	51.7	28.5	42.9	
		44	39.5	59.4	33.5	50.3	28.5	42.8	23.7	35.6	
		48	33.2	50.0	28.1	42.3					
Properties of 2 angles—3/8 in. back to back											
A_g, in.[2]			9.50		8.36		7.22		6.06		
r_x, in.			1.14		1.15		1.16		1.17		
r_y, in.			2.89		2.88		2.86		2.85		
Properties of single angle											
r_z, in.			0.864		0.867		0.870		0.874		

ASD	LRFD
$\Omega_c = 1.67$	$\phi_c = 0.90$

[a] For Y-Y axis, welded or pretensioned bolted intermediate connectors must be used.
[b] For required number of intermediate connectors, see the discussion of Table 4-8.
[c] Shape is slender for compression with F_y = 36 ksi.
Note: Heavy line indicates KL/r equal to or greater than 200.

Table 4-10 (continued)

Available Strength in Axial Compression, kips

Double Angles—SLBB

F_y = 36 ksi

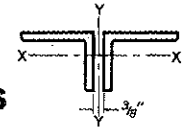

2L6 SLBB

Shape			2L6×3½×						No. of connectors[a]
			½		⅜[c]		5/16[c]		
lb/ft			30.6		23.4		19.6		
Design			P_n/Ω_c ASD	$\phi_c P_n$ LRFD	P_n/Ω_c ASD	$\phi_c P_n$ LRFD	P_n/Ω_c ASD	$\phi_c P_n$ LRFD	
Effective length, KL (ft), with respect to indicated axis	X-X Axis	0	194	292	135	203	103	155	
		1	192	289	134	202	102	154	
		2	188	282	131	198	100	151	
		3	180	271	127	191	97.2	146	
		4	170	256	121	181	92.9	140	
		5	158	238	113	170	87.8	132	
		6	145	218	105	157	81.8	123	
		7	131	196	95.3	143	75.3	113	
		8	116	174	85.6	129	68.4	103	b
		9	101	151	75.9	114	61.4	92.3	
		10	86.4	130	66.2	99.5	54.4	81.8	
		11	72.7	109	57.0	85.7	47.6	71.5	
		12	61.1	91.9	48.3	72.6	41.1	61.8	
		13	52.1	78.3	41.1	61.8	35.1	52.7	
		14	44.9	67.5	35.5	53.3	30.2	45.4	
		15	39.1	58.8	30.9	46.4	26.3	39.6	
		16	34.4	51.7	27.2	40.8	23.1	34.8	
	Y-Y Axis	0	194	292	135	203	103	155	
		6	185	278	105	158	74.7	112	
		8	180	271	105	158	74.6	112	
		10	175	263	105	158	74.5	112	
		12	169	253	105	157	74.3	112	
		14	161	242	104	156	74.1	111	
		16	150	225	102	153	73.4	110	
		18	141	211	98.1	148	72.3	109	
		20	131	197	92.8	139	70.2	106	
		22	121	182	86.6	130	66.8	100	5
		24	111	166	80.1	120	62.7	94.2	
		26	101	151	73.4	110	58.1	87.4	
		28	91.0	137	66.8	100	53.4	80.3	
		30	81.5	122	60.4	90.8	48.8	73.3	
		32	72.3	109	54.2	81.4	44.2	66.4	
		34	64.1	96.3	48.1	72.4	39.7	59.7	
		38	51.3	77.1	38.6	58.1	31.9	48.0	
		42	42.0	63.2	31.7	47.6	26.2	39.4	
		46	35.1	52.7	26.5	39.8	21.9	32.9	
		48	32.2	48.4	24.3	36.5	20.1	30.3	
Properties of 2 angles—⅜ in. back to back									
A_g, in.²			9.00		6.88		5.78		
r_x, in.			0.968		0.984		0.991		
r_y, in.			2.96		2.94		2.92		
Properties of single angle									
r_z, in.			0.756		0.763		0.767		

ASD	LRFD
Ω_c = 1.67	ϕ_c = 0.90

[a] For Y-Y axis, welded or pretensioned bolted intermediate connectors must be used.
[b] For required number of intermediate connectors, see the discussion of Table 4-8.
[c] Shape is slender for compression with F_y = 36 ksi.

Table 4-10 (continued)

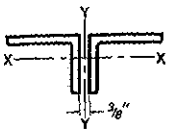

2L5 SLBB

Available Strength in Axial Compression, kips

F_y = 36 ksi

Double Angles—SLBB

Shape			2L5×3½×										
			3/4		5/8		1/2		3/8[c]		5/16[c]		No. of connectors[a]
lb/ft			39.6		33.6		27.2		20.8		17.4		
Design			P_n/Ω_c ASD	$\phi_c P_n$ LRFD	P_n/Ω_c ASD	$\phi_c P_n$ LRFD	P_n/Ω_c ASD	$\phi_c P_n$ LRFD	P_n/Ω_c ASD	$\phi_c P_n$ LRFD	P_n/Ω_c ASD	$\phi_c P_n$ LRFD	
Effective length, KL (ft), with respect to indicated axis	X-X Axis	0	252	379	213	319	172	259	129	194	101	151	b
		1	250	376	211	317	171	257	128	193	100	150	
		2	244	367	206	310	167	251	126	189	98.0	147	
		3	235	353	198	298	161	242	121	182	94.8	143	
		4	222	334	188	282	153	230	115	173	90.5	136	
		5	207	310	175	263	143	214	108	162	85.3	128	
		6	189	284	161	241	131	197	99.9	150	79.2	119	
		7	170	256	145	218	119	179	91.0	137	72.7	109	
		8	151	227	129	194	106	160	81.7	123	65.8	98.9	
		9	132	198	113	170	93.3	140	72.4	109	58.8	88.3	
		10	113	170	97.6	147	80.8	121	63.2	94.9	51.8	77.8	
		11	95.7	144	82.9	125	68.9	104	54.3	81.7	45.0	67.7	
		12	80.5	121	69.6	105	58.0	87.2	46.0	69.1	38.6	58.0	
		13	68.6	103	59.3	89.2	49.4	74.3	39.2	58.9	32.9	49.4	
		14	59.1	88.8	51.2	76.9	42.6	64.0	33.8	50.8	28.4	42.6	
		15	51.5	77.4	44.6	67.0	37.1	55.8	29.4	44.3	24.7	37.1	
		16	45.3	68.0	39.2	58.9	32.6	49.0	25.9	38.9	21.7	32.6	
		17							22.9	34.5	19.2	28.9	
	Y-Y Axis	0	252	379	213	319	172	259	129	194	101	151	4
		6	239	360	201	302	161	243	106	159	77.7	117	
		8	231	348	194	292	156	234	106	159	77.4	116	
		10	221	333	185	279	149	224	104	157	76.9	116	
		12	210	315	176	264	141	212	102	153	75.9	114	
		14	191	288	160	241	128	193	94.8	142	72.8	109	
		16	176	265	147	222	118	177	87.5	132	68.4	103	
		18	161	241	134	202	107	161	79.6	120	63.1	94.8	
		20	145	217	121	181	96.4	145	71.5	108	57.2	86.0	
		22	129	194	107	161	85.6	129	63.5	95.4	51.3	77.1	
		24	114	171	94.5	142	75.1	113	55.7	83.7	45.4	68.3	
		26	99.0	149	82.2	123	65.1	97.8	48.2	72.4	39.8	59.8	
		28	85.4	128	70.9	107	56.2	84.4	41.6	62.6	34.5	51.8	
		30	74.4	112	61.8	92.8	49.0	73.6	36.3	54.6	30.1	45.3	
		32	65.4	98.3	54.3	81.6	43.1	64.7	32.0	48.1	26.5	39.9	
		34	58.0	87.1	48.1	72.3	38.2	57.4	28.4	42.6	23.5	35.4	
		38	46.4	69.8	38.5	57.9	30.6	46.0	22.7	34.2	18.9	28.4	
Properties of 2 angles—3/8 in. back to back													
A_g, in.^{2}			11.7		9.86		8.00		6.10		5.12		
r_x, in.			0.974		0.987		1.00		1.02		1.02		
r_y, in.			2.47		2.45		2.42		2.39		2.38		
Properties of single angle													
r_z, in.			0.744		0.746		0.750		0.755		0.758		

ASD | LRFD

Ω_c = 1.67 | ϕ_c = 0.90

[a] For Y-Y axis, welded or pretensioned bolted intermediate connectors must be used.
[b] For required number of intermediate connectors, see the discussion of Table 4-8.
[c] Shape is slender for compression with F_y = 36 ksi.
Note: Heavy line indicates KL/r equal to or greater than 200.

Table 4-10 (continued)

F_y = 36 ksi

Available Strength in Axial Compression, kips

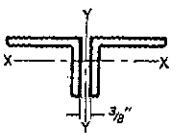

2L5 SLBB

Double Angles—SLBB

Shape			2L5×3×										
			1/2		7/16		3/8[c]		5/16[c]		1/4[c]		No. of connectors[a]
lb/ft			25.6		22.6		19.6		16.4		13.2		
Design			P_n/Ω_c ASD	$\phi_c P_n$ LRFD	P_n/Ω_c ASD	$\phi_c P_n$ LRFD	P_n/Ω_c ASD	$\phi_c P_n$ LRFD	P_n/Ω_c ASD	$\phi_c P_n$ LRFD	P_n/Ω_c ASD	$\phi_c P_n$ LRFD	
Effective length, KL (ft), with respect to indicated axis	X-X Axis	0	162	243	143	214	121	182	94.8	142	67.2	101	b
		1	160	240	141	212	120	180	93.8	141	66.7	100	
		2	155	232	137	205	116	175	91.2	137	65.0	97.7	
		3	146	220	129	194	110	166	86.9	131	62.4	93.7	
		4	135	203	120	180	102	154	81.2	122	58.8	88.4	
		5	122	184	108	163	93.0	140	74.4	112	54.5	82.0	
		6	108	163	96.1	144	82.7	124	66.9	101	49.7	74.8	
		7	93.6	141	83.3	125	72.1	108	59.0	88.7	44.6	67.0	
		8	79.1	119	70.7	106	61.5	92.4	51.1	76.8	39.3	59.1	
		9	65.4	98.4	58.7	88.2	51.3	77.1	43.3	65.1	34.1	51.3	
		10	53.2	79.9	47.7	71.7	41.9	63.0	36.0	54.1	29.1	43.7	
		11	43.9	66.0	39.4	59.3	34.7	52.1	29.8	44.7	24.4	36.6	
		12	36.9	55.5	33.1	49.8	29.1	43.8	25.0	37.6	20.5	30.8	
		13	31.5	47.3	28.2	42.4	24.8	37.3	21.3	32.0	17.4	26.2	
		14							18.4	27.6	15.0	22.6	
	Y-Y Axis	0	162	243	143	214	121	182	94.8	142	67.2	101	4
		6	153	230	134	202	100	150	73.7	111	48.1	72.3	
		8	148	222	130	195	99.8	150	73.5	111	48.0	72.2	
		10	142	213	124	187	99.2	149	73.3	110	47.9	72.0	
		12	134	202	118	177	97.4	146	72.7	109	47.6	71.5	
		14	123	185	108	162	91.3	137	70.5	106	47.1	70.7	
		16	114	171	99.6	150	84.7	127	66.7	100	45.9	69.0	
		18	104	156	90.9	137	77.5	116	61.7	92.8	43.8	65.8	
		20	94.0	141	82.1	123	70.0	105	56.3	84.7	40.7	61.1	
		22	84.0	126	73.3	110	62.6	94.1	50.8	76.3	37.2	55.8	
		24	74.3	112	64.8	97.4	55.3	83.2	45.3	68.1	33.5	50.4	
		26	65.1	97.8	56.6	85.1	48.4	72.7	40.0	60.1	29.9	44.9	
		28	56.3	84.6	48.9	73.5	41.8	62.9	34.9	52.4	27.3	41.1	
		30	49.0	73.7	42.6	64.1	36.5	54.9	30.4	45.7	24.0	36.0	
		32	43.1	64.8	37.5	56.4	32.1	48.3	26.8	40.3	21.1	31.8	
		34	38.2	57.4	33.2	49.9	28.5	42.8	23.8	35.7	18.8	28.2	5
		38	30.6	46.0	26.6	40.0	22.8	34.3	19.1	28.6	15.1	22.6	
Properties of 2 angles—3/8 in. back to back													
A_g, in.^{2}			7.50		6.62		5.72		4.82		3.88		
r_x, in.			0.824		0.831		0.838		0.846		0.853		
r_y, in.			2.50		2.48		2.47		2.46		2.44		
Properties of single angle													
r_z, in.			0.642		0.644		0.646		0.649		0.652		

ASD | LRFD

Ω_c = 1.67 | ϕ_c = 0.90

[a] For Y-Y axis, welded or pretensioned bolted intermediate connectors must be used.
[b] For required number of intermediate connectors, see the discussion of Table 4-8.
[c] Shape is slender for compression with F_y = 36 ksi.
Note: Heavy line indicates KL/r equal to or greater than 200.

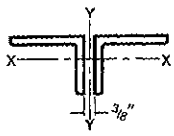

2L4 SLBB

Table 4-10 (continued)
Available Strength in Axial Compression, kips
Double Angles—SLBB

F_y = 36 ksi

Shape			2L4×3½×								No. of connectors[a]
			1/2		3/8		5/16		1/4[c]		
lb/ft			23.8		18.2		15.4		12.4		
Design			P_n/Ω_c ASD	$\phi_c P_n$ LRFD	P_n/Ω_c ASD	$\phi_c P_n$ LRFD	P_n/Ω_c ASD	$\phi_c P_n$ LRFD	P_n/Ω_c ASD	$\phi_c P_n$ LRFD	
Effective length, KL (ft), with respect to indicated axis	X-X Axis	0	151	227	116	174	96.7	145	71.6	108	
		1	150	225	115	172	96.1	144	71.1	107	
		2	147	221	112	169	94.1	142	69.9	105	
		3	142	213	109	163	91.0	137	67.8	102	
		4	135	203	104	156	86.8	131	65.0	97.7	
		5	127	190	97.3	146	81.7	123	61.5	92.5	
		6	117	176	90.2	136	75.9	114	57.6	86.5	
		7	107	161	82.5	124	69.6	105	53.2	80.0	
		8	96.4	145	74.4	112	62.9	94.5	48.6	73.1	
		9	85.5	129	66.2	99.5	56.1	84.3	43.9	65.9	b
		10	74.9	113	58.1	87.3	49.4	74.2	39.1	58.8	
		11	64.6	97.1	50.3	75.6	42.9	64.4	34.5	51.8	
		12	54.9	82.5	42.8	64.4	36.7	55.1	30.0	45.1	
		13	46.8	70.3	36.5	54.9	31.2	46.9	25.7	38.7	
		14	40.3	60.6	31.5	47.3	26.9	40.5	22.2	33.4	
		15	35.1	52.8	27.4	41.2	23.5	35.3	19.3	29.1	
		16	30.9	46.4	24.1	36.2	20.6	31.0	17.0	25.5	
		17	27.3	41.1	21.3	32.1	18.3	27.4	15.1	22.6	
	Y-Y Axis	0	151	227	116	174	96.7	145	71.6	108	
		6	137	205	102	153	78.3	118	53.6	80.6	
		8	129	194	96.2	145	76.7	115	52.9	79.5	
		10	117	176	87.4	131	71.8	108	50.9	76.5	
		12	106	159	78.9	119	65.4	98.3	47.6	71.5	
		14	93.8	141	69.9	105	58.0	87.1	43.1	64.7	
		16	81.6	123	60.7	91.3	50.3	75.6	38.0	57.0	3
		18	69.7	105	51.7	77.7	42.7	64.2	32.7	49.2	
		20	58.3	87.7	43.1	64.8	35.4	53.3	27.6	41.5	
		22	48.3	72.6	35.7	53.7	29.5	44.3	23.0	34.6	
		24	40.6	61.1	30.1	45.2	24.8	37.3	19.5	29.3	
		26	34.6	52.1	25.7	38.6	21.2	31.9	16.7	25.1	
		28	29.9	44.9	22.2	33.3	18.4	27.6	14.4	21.7	
		30	26.1	39.2	19.3	29.1	16.0	24.1	12.6	19.0	
Properties of 2 angles—3/8 in. back to back											
A_g, in.^{2}			7.00		5.36		4.50		3.64		
r_x, in.			1.04		1.05		1.06		1.07		
r_y, in.			1.89		1.86		1.85		1.83		
Properties of single angle											
r_z, in.			0.716		0.719		0.721		0.723		

ASD	LRFD
Ω_c = 1.67	ϕ_c = 0.90

[a] For Y-Y axis, welded or pretensioned bolted intermediate connectors must be used.
[b] For required number of intermediate connectors, see the discussion of Table 4-8.
[c] Shape is slender for compression with F_y = 36 ksi.

Table 4-10 (continued)

F_y = 36 ksi

Available Strength in Axial Compression, kips

Double Angles—SLBB

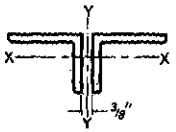

2L4 SLBB

Shape			2L4×3×										No. of connectors[3]
			5/8		1/2		3/8		5/16		1/4[c]		
lb/ft			27.2		22.2		17.0		14.4		11.6		
Design			P_n/Ω_c ASD	$\phi_c P_n$ LRFD	P_n/Ω_c ASD	$\phi_c P_n$ LRFD	P_n/Ω_c ASD	$\phi_c P_n$ LRFD	P_n/Ω_c ASD	$\phi_c P_n$ LRFD	P_n/Ω_c ASD	$\phi_c P_n$ LRFD	
Effective length, KL (ft), with respect to indicated axis	X-X Axis	0	172	259	140	211	107	161	89.8	135	66.5	99.9	
		1	170	256	139	208	106	160	89.0	134	65.9	99.0	
		2	165	248	134	202	103	155	86.4	130	64.2	96.4	
		3	156	235	128	192	98.2	148	82.3	124	61.4	92.3	
		4	145	218	119	179	91.6	138	76.8	116	57.7	86.8	
		5	132	198	108	163	83.7	126	70.4	106	53.3	80.2	
		6	117	176	96.7	145	75.0	113	63.2	95.0	48.4	72.8	
		7	102	154	84.6	127	65.9	99.1	55.7	83.7	43.2	64.9	b
		8	87.2	131	72.5	109	56.8	85.4	48.1	72.3	37.9	56.9	
		9	72.8	109	60.8	91.5	48.0	72.1	40.7	61.2	32.6	49.0	
		10	59.5	89.4	49.9	75.1	39.6	59.5	33.8	50.8	27.6	41.5	
		11	49.2	73.9	41.3	62.0	32.7	49.2	27.9	42.0	22.9	34.5	
		12	41.3	62.1	34.7	52.1	27.5	41.3	23.5	35.3	19.3	29.0	
		13	35.2	52.9	29.6	44.4	23.4	35.2	20.0	30.0	16.4	24.7	
		14	30.3	45.6	25.5	38.3	20.2	30.4	17.2	25.9	14.2	21.3	
	Y-Y Axis	0	172	259	140	211	107	161	89.8	135	66.5	99.9	
		6	159	239	129	193	97.0	146	74.1	111	51.1	76.8	
		8	151	227	122	183	91.8	138	73.0	110	50.7	76.1	
		10	141	212	113	171	85.5	129	68.4	103	49.0	73.7	
		12	126	189	101	152	76.4	115	62.3	93.7	46.0	69.1	3
		14	113	170	90.5	136	68.2	103	55.4	83.2	41.7	62.6	
		16	99.4	149	79.5	120	59.9	90.0	48.2	72.4	36.8	55.3	
		18	86.1	129	68.6	103	51.6	77.5	41.1	61.7	31.9	47.9	
		20	73.3	110	58.2	87.5	43.7	65.6	35.8	53.8	27.1	40.7	
		22	61.3	92.1	48.5	72.8	36.3	54.6	29.7	44.7	23.6	35.5	
		24	51.5	77.4	40.8	61.3	30.6	45.9	25.1	37.7	19.9	29.9	
		26	43.9	66.0	34.7	52.2	26.1	39.2	21.4	32.2	17.0	25.6	4
		28	37.9	56.9	30.0	45.1	22.5	33.8	18.5	27.8	14.7	22.1	
		30	33.0	49.6	26.1	39.3	19.6	29.5	16.1	24.2	12.9	19.3	
		32	29.0	43.6	23.0	34.5	17.2	25.9					
Properties of 2 angles—3/8 in. back to back													
A_g, in.^{2}			7.98		6.50		4.98		4.18		3.38		
r_x, in.			0.845		0.858		0.873		0.880		0.887		
r_y, in.			1.96		1.95		1.93		1.91		1.90		
Properties of single angle													
r_z, in.			0.631		0.633		0.636		0.638		0.639		

ASD	LRFD
Ω_c = 1.67	ϕ_c = 0.90

[a] For Y-Y axis, welded or pretensioned bolted intermediate connectors must be used.
[b] For required number of intermediate connectors, see the discussion of Table 4-8.
[c] Shape is slender for compression with F_y = 36 ksi.
Note: Heavy line indicates KL/r equal to or greater than 200.

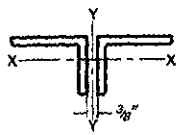

2L3½ SLBB

Table 4-10 (continued)
Available Strength in Axial Compression, kips
Double Angles—SLBB

F_y = 36 ksi

Shape			2L3½×3×										No. of connectors[a]
			1/2		7/16		3/8		5/16		1/4[c]		
lb/ft			20.4		18.2		15.8		13.2		10.8		
Design			P_n/Ω_c ASD	$\phi_c P_n$ LRFD	P_n/Ω_c ASD	$\phi_c P_n$ LRFD	P_n/Ω_c ASD	$\phi_c P_n$ LRFD	P_n/Ω_c ASD	$\phi_c P_n$ LRFD	P_n/Ω_c ASD	$\phi_c P_n$ LRFD	
Effective length, KL (ft), with respect to indicated axis	X-X Axis	0	130	196	115	173	100	150	84.1	126	65.7	98.8	b
		1	129	194	114	171	99.1	149	83.3	125	65.2	97.9	
		2	125	188	111	166	96.3	145	81.0	122	63.4	95.4	
		3	119	179	106	159	91.8	138	77.3	116	60.7	91.2	
		4	111	167	98.6	148	85.9	129	72.4	109	57.0	85.7	
		5	102	153	90.4	136	78.8	118	66.5	100	52.7	79.1	
		6	91.3	137	81.2	122	71.0	107	60.0	90.2	47.8	71.8	
		7	80.3	121	71.6	108	62.7	94.3	53.1	79.9	42.6	64.0	
		8	69.3	104	62.0	93.1	54.4	81.7	46.2	69.4	37.3	56.0	
		9	58.6	88.1	52.6	79.0	46.2	69.5	39.4	59.2	32.0	48.2	
		10	48.5	72.9	43.7	65.6	38.5	57.9	33.0	49.6	27.1	40.7	
		11	40.1	60.2	36.1	54.2	31.8	47.9	27.3	41.0	22.5	33.8	
		12	33.7	50.6	30.3	45.6	26.8	40.2	22.9	34.4	18.9	28.4	
		13	28.7	43.1	25.8	38.8	22.8	34.3	19.5	29.3	16.1	24.2	
		14	24.7	37.2	22.3	33.5	19.7	29.6	16.8	25.3	13.9	20.9	
		15							14.7	22.0	12.1	18.2	
	Y-Y Axis	0	130	196	115	173	100	150	84.1	126	65.7	98.8	3
		6	117	175	102	154	87.9	132	72.6	109	51.7	77.7	
		8	108	163	95.0	143	81.6	123	67.5	101	50.2	75.5	
		10	95.7	144	83.7	126	72.0	108	59.6	89.5	45.9	69.1	
		12	84.1	126	73.4	110	63.1	94.9	52.3	78.6	40.7	61.2	
		14	72.2	109	62.9	94.5	54.0	81.2	44.8	67.3	35.0	52.5	
		16	60.5	91.0	52.6	79.0	45.1	67.8	37.4	56.2	29.2	43.9	
		18	49.5	74.4	42.8	64.3	36.7	55.1	30.4	45.6	23.8	35.7	
		20	41.7	62.6	36.0	54.1	29.8	44.7	24.7	37.1	19.4	29.1	
		22	34.5	51.8	29.8	44.8	24.6	37.0	20.4	30.7	16.1	24.2	
		24	29.0	43.6	25.1	37.7	20.7	31.2	17.2	25.9	13.6	20.4	
		26	24.7	37.1	21.4	32.1	17.7	26.6	14.7	22.1	11.6	17.4	
		28	21.3	32.0									4
Properties of 2 angles—3/8 in. back to back													
A_g, in.^{2}			6.04		5.34		4.64		3.90		3.16		
r_x, in.			0.877		0.885		0.892		0.900		0.908		
r_y, in.			1.69		1.67		1.66		1.65		1.63		
Properties of single angle													
r_z, in.			0.618		0.620		0.622		0.624		0.628		

ASD	LRFD
$\Omega_c = 1.67$	$\phi_c = 0.90$

[a] For Y-Y axis, welded or pretensioned bolted intermediate connectors must be used.
[b] For required number of intermediate connectors, see the discussion of Table 4-8.
[c] Shape is slender for compression with F_y = 36 ksi.
Note: Heavy line indicates KL/r equal to or greater than 200.

Table 4-10 (continued)

Available Strength in Axial Compression, kips

Double Angles—SLBB

F_y = 36 ksi

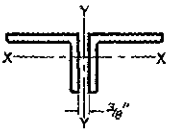

2L3½ SLBB

Shape			2L3½×2½×								No. of connectors[a]
			1/2		3/8		5/16		1/4[c]		
lb/ft			18.8		14.4		12.2		9.80		
Design			P_n/Ω_c ASD	$\phi_c P_n$ LRFD	P_n/Ω_c ASD	$\phi_c P_n$ LRFD	P_n/Ω_c ASD	$\phi_c P_n$ LRFD	P_n/Ω_c ASD	$\phi_c P_n$ LRFD	
Effective length, KL (ft), with respect to indicated axis	X-X Axis	0	119	179	91.4	137	77.2	116	60.3	90.7	
		1	118	177	90.1	135	76.1	114	59.5	89.4	
		2	112	169	86.2	129	72.8	109	57.1	85.8	
		3	104	156	80.0	120	67.7	102	53.3	80.2	
		4	93.3	140	72.1	108	61.2	92.0	48.5	72.8	
		5	81.2	122	63.2	94.9	53.7	80.7	42.8	64.4	
		6	68.5	103	53.7	80.7	45.8	68.8	36.9	55.4	b
		7	56.1	84.3	44.3	66.6	37.9	57.0	30.8	46.4	
		8	44.4	66.7	35.5	53.3	30.5	45.8	25.1	37.8	
		9	35.1	52.7	28.0	42.1	24.1	36.2	20.0	30.0	
		10	28.4	42.7	22.7	34.1	19.5	29.4	16.2	24.3	
		11	23.5	35.3	18.8	28.2	16.1	24.3	13.4	20.1	
		12					13.6	20.4	11.2	16.9	
	Y-Y Axis	0	119	179	91.4	137	77.2	116	60.3	90.7	
		2	117	176	88.8	134	74.1	111	48.6	73.0	
		4	114	171	86.2	130	72.0	108	48.5	72.9	
		6	108	163	82.1	123	68.5	103	48.2	72.4	
		8	101	152	76.5	115	63.9	96.1	47.3	71.1	
		10	90.4	136	68.2	102	57.0	85.7	44.0	66.1	
		12	80.3	121	60.4	90.8	50.5	75.9	39.4	59.2	
		14	69.8	105	52.3	78.6	43.7	65.7	34.2	51.5	4
		16	59.3	89.2	44.3	66.6	37.0	55.6	29.0	43.7	
		18	49.4	74.2	36.7	55.1	30.6	46.0	24.1	36.2	
		20	40.3	60.5	29.8	44.8	24.9	37.4	19.6	29.5	
		22	33.3	50.0	24.7	37.1	20.6	31.0	16.3	24.4	
		24	28.0	42.0	20.7	31.2	17.3	26.0	13.7	20.6	
		26	23.8	35.8	17.7	26.6	14.8	22.2	11.7	17.6	
		28	20.6	30.9	15.3	22.9	12.7	19.2	10.1	15.2	
Properties of 2 angles—3/8 in. back to back											
A_g, in.^{2}			5.54		4.24		3.58		2.90		
r_x, in.			0.701		0.716		0.723		0.731		
r_y, in.			1.76		1.73		1.72		1.70		
Properties of single angle											
r_z, in.			0.532		0.535		0.538		0.541		

ASD	LRFD
Ω_c = 1.67	ϕ_c = 0.90

[a] For Y-Y axis, welded or pretensioned bolted intermediate connectors must be used.
[b] For required number of intermediate connectors, see the discussion of Table 4-8.
[c] Shape is slender for compression with F_y = 36 ksi.
Note: Heavy line indicates KL/r equal to or greater than 200.

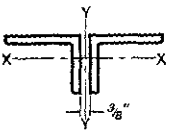

2L3 SLBB

Table 4-10 (continued)
Available Strength in Axial Compression, kips
Double Angles—SLBB

F_y = 36 ksi

Shape			2L3×2½×														No. of connectors[a]
			1/2		7/16		3/8		5/16		1/4		3/16[b]				
lb/ft			17.0		15.2		13.2		11.2		9.00		6.78				
Design			P_n/Ω_c ASD	$\phi_c P_n$ LRFD	P_n/Ω_c ASD	$\phi_c P_n$ LRFD	P_n/Ω_c ASD	$\phi_c P_n$ LRFD	P_n/Ω_c ASD	$\phi_c P_n$ LRFD	P_n/Ω_c ASD	$\phi_c P_n$ LRFD	P_n/Ω_c ASD	$\phi_c P_n$ LRFD			
Effective length, KL (ft), with respect to indicated axis	X-X Axis	0	108	162	95.7	144	83.2	125	70.3	106	56.9	85.5	39.3	59.1			
		1	106	160	94.3	142	82.0	123	69.3	104	56.1	84.4	38.8	58.4			
		2	102	153	90.3	136	78.6	118	66.5	99.9	53.9	81.0	37.4	56.3			
		3	94.4	142	84.0	126	73.2	110	62.0	93.2	50.3	75.7	35.2	53.0			
		4	85.2	128	75.9	114	66.3	99.7	56.3	84.6	45.8	68.8	32.4	48.6			
		5	74.6	112	66.7	100	58.4	87.7	49.7	74.7	40.5	60.8	29.0	43.6			
		6	63.5	95.4	56.9	85.5	49.9	75.0	42.6	64.1	34.9	52.4	25.3	38.1			b
		7	52.4	78.8	47.1	70.8	41.5	62.4	35.6	53.5	29.2	43.9	21.6	32.5			
		8	42.0	63.2	37.9	57.0	33.6	50.4	28.9	43.4	23.8	35.8	18.0	27.1			
		9	33.2	49.9	30.0	45.1	26.6	39.9	22.9	34.5	18.9	28.5	14.6	22.0			
		10	26.9	40.4	24.3	36.5	21.5	32.4	18.6	27.9	15.3	23.0	11.8	17.8			
		11	22.2	33.4	20.1	30.2	17.8	26.7	15.4	23.1	12.7	19.0	9.78	14.7			
		12			16.9	25.4	15.0	22.5	12.9	19.4	10.6	16.0	8.22	12.4			
	Y-Y Axis	0	108	162	95.7	144	83.2	125	70.3	106	56.9	85.5	39.3	59.1			
		2	105	158	93.1	140	80.4	121	67.1	101	52.9	79.5	29.9	44.9			
		4	101	152	89.4	134	77.1	116	64.3	96.7	50.8	76.4	29.7	44.7			
		6	94.5	142	83.6	125	71.9	108	60.0	90.2	47.5	71.4	29.3	44.1			
		8	83.5	126	73.7	111	63.4	95.3	53.0	79.6	42.0	63.1	27.9	42.0			3
		10	72.8	109	64.2	96.5	55.1	82.7	46.0	69.1	36.5	54.9	25.2	37.9			
		12	61.5	92.4	54.1	81.3	46.3	69.6	38.6	58.0	30.7	46.2	21.6	32.5			
		14	50.4	75.7	44.2	66.5	37.7	56.6	31.4	47.2	25.0	37.5	17.9	26.8			
		16	41.6	62.6	36.5	54.8	30.9	46.4	25.7	38.6	20.4	30.6	14.2	21.4			
		18	32.9	49.5	28.8	43.3	24.4	36.7	20.3	30.5	16.2	24.3	11.8	17.7			
		20	26.7	40.1	23.4	35.1	19.8	29.8	16.5	24.8	13.1	19.7	9.59	14.4			
		22	22.1	33.1	19.3	29.1	16.4	24.6	13.6	20.5	10.9	16.3	7.96	12.0			4
		24	18.5	27.9	16.2	24.4	13.8	20.7	11.5	17.2	9.15	13.8					
Properties of 2 angles—3/8 in. back to back																	
A_g, in.^{2}			5.00		4.44		3.86		3.26		2.64		2.00				
r_x, in.			0.718		0.724		0.731		0.739		0.746		0.753				
r_y, in.			1.49		1.48		1.46		1.45		1.44		1.42				
Properties of single angle																	
r_z, in.			0.516		0.516		0.517		0.518		0.520		0.521				

ASD	LRFD
Ω_c = 1.67	ϕ_c = 0.90

[a] For Y-Y axis, welded or pretensioned bolted intermediate connectors must be used.
[b] For required number of intermediate connectors, see the discussion of Table 4-8.
[c] Shape is slender for compression with F_y = 36 ksi.
Note: Heavy line indicates *KL/r* equal to or greater than 200.

Table 4-10 (continued)

Available Strength in Axial Compression, kips

Double Angles—SLBB

F_y = 36 ksi

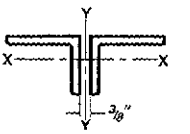

2L3 SLBB

Shape			2L3×2×										No. of connectors[a]
			1/2		3/8		5/16		1/4		3/16[c]		
lb/ft			15.4		11.8		10.0		8.20		6.14		
Design			P_n/Ω_c ASD	$\phi_c P_n$ LRFD	P_n/Ω_c ASD	$\phi_c P_n$ LRFD	P_n/Ω_c ASD	$\phi_c P_n$ LRFD	P_n/Ω_c ASD	$\phi_c P_n$ LRFD	P_n/Ω_c ASD	$\phi_c P_n$ LRFD	
Effective length, KL (ft), with respect to indicated axis	X-X Axis	0	97.4	146	75.4	113	63.8	95.9	51.7	77.8	36.0	54.1	
		1	95.0	143	73.6	111	62.3	93.6	50.5	76.0	35.2	53.0	
		2	87.9	132	68.4	103	58.0	87.1	47.1	70.8	33.1	49.8	
		3	77.3	116	60.5	90.9	51.4	77.3	41.9	63.0	29.8	44.9	
		4	64.6	97.1	50.9	76.5	43.5	65.3	35.6	53.5	25.8	38.8	
		5	51.2	77.0	40.8	61.3	35.0	52.6	28.8	43.3	21.4	32.2	
		6	38.6	58.0	31.1	46.8	26.9	40.4	22.3	33.5	17.0	25.6	b
		7	28.4	42.7	23.0	34.5	19.9	29.9	16.6	24.9	13.0	19.5	
		8	21.7	32.7	17.6	26.4	15.2	22.9	12.7	19.0	9.94	14.9	
		9	17.2	25.8	13.9	20.9	12.0	18.1	10.0	15.0	7.85	11.8	
	Y-Y Axis	0	97.4	146	75.4	113	63.8	95.9	51.7	77.8	36.0	54.1	
		2	95.8	144	73.8	111	62.0	93.2	49.6	74.6	27.9	41.9	
		4	92.3	139	71.0	107	59.7	89.7	47.8	71.8	27.8	41.8	
		6	86.7	130	66.7	100	56.0	84.1	44.8	67.3	27.7	41.6	
		8	77.4	116	59.4	89.3	49.8	74.8	39.9	60.0	26.8	40.3	4
		10	68.2	103	52.2	78.5	43.7	65.6	35.0	52.6	24.5	36.9	
		12	58.4	87.8	44.6	67.0	37.2	55.9	29.8	44.8	21.3	32.0	
		14	48.6	73.1	37.0	55.6	30.7	46.2	24.6	37.0	17.8	26.8	
		16	40.7	61.1	30.8	46.3	25.5	38.3	19.7	29.6	14.5	21.8	
		18	32.4	48.6	24.4	36.7	20.2	30.3	16.1	24.3	11.9	17.9	
		20	26.2	39.4	19.8	29.8	16.4	24.6	13.1	19.7	9.69	14.6	
		22	21.7	32.6	16.4	24.6	13.5	20.3	10.8	16.3	8.03	12.1	5
		24	18.2	27.4	13.8	20.7	11.4	17.1	9.11	13.7	6.76	10.2	
		26	15.5	23.3									
Properties of 2 angles—3/8 in. back to back													
A_g, in.^{2}			4.52		3.50		2.96		2.40		1.83		
r_x, in.			0.543		0.555		0.562		0.569		0.577		
r_y, in.			1.56		1.54		1.52		1.51		1.49		
Properties of single angle													
r_z, in.			0.425		0.426		0.428		0.431		0.435		

ASD	LRFD
Ω_c = 1.67	ϕ_c = 0.90

[a] For Y-Y axis, welded or pretensioned bolted intermediate connectors must be used.
[b] For required number of intermediate connectors, see the discussion of Table 4-8.
[c] Shape is slender for compression with F_y = 36 ksi.
Note: Heavy line indicates KL/r equal to or greater than 200.

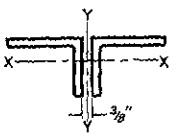

2L2½ SLBB

Table 4-10 (continued)
Available Strength in Axial Compression, kips
Double Angles—SLBB

F_y = 36 ksi

Shape			2L2½×2×								No. of connectors[a]
			3/8		5/16		1/4		3/16[c]		
lb/ft			10.6		9.00		7.24		5.50		
Design			P_n/Ω_c ASD	$\phi_c P_n$ LRFD	P_n/Ω_c ASD	$\phi_c P_n$ LRFD	P_n/Ω_c ASD	$\phi_c P_n$ LRFD	P_n/Ω_c ASD	$\phi_c P_n$ LRFD	
Effective length, KL (ft), with respect to indicated axis	X-X Axis	0	66.8	100	56.9	85.5	46.1	69.3	34.8	52.2	
		1	65.3	98.2	55.6	83.6	45.1	67.8	34.0	51.2	
		2	61.0	91.6	52.0	78.2	42.3	63.5	32.0	48.0	
		3	54.3	81.7	46.5	69.9	37.9	57.0	28.8	43.3	
		4	46.2	69.5	39.7	59.7	32.5	48.9	24.9	37.4	
		5	37.6	56.5	32.5	48.8	26.7	40.2	20.6	31.0	
		6	29.2	43.9	25.4	38.1	21.0	31.6	16.4	24.6	b
		7	21.8	32.7	19.0	28.5	15.8	23.8	12.5	18.7	
		8	16.7	25.0	14.5	21.8	12.1	18.2	9.53	14.3	
		9	13.2	19.8	11.5	17.3	9.57	14.4	7.53	11.3	
	Y-Y Axis	0	66.8	100	56.9	85.5	46.1	69.3	34.8	52.2	
		2	64.8	97.4	54.8	82.4	43.8	65.9	28.0	42.0	
		4	61.3	92.2	51.8	77.9	41.4	62.2	27.7	41.7	
		6	55.9	84.0	47.2	71.0	36.8	55.3	26.6	39.9	3
		8	47.7	71.7	40.3	60.5	31.6	47.5	23.5	35.3	
		10	39.7	59.7	33.5	50.3	26.0	39.0	19.4	29.1	
		12	31.8	47.7	26.7	40.1	20.4	30.6	15.2	22.9	
		14	24.3	36.5	20.4	30.6	16.0	24.0	11.9	18.0	
		16	18.6	28.0	15.6	23.5	12.3	18.4	9.20	13.8	
		18	14.7	22.1	12.3	18.6	9.71	14.6	7.29	11.0	
		20	11.9	17.9	10.0	15.0	7.87	11.8	5.92	8.90	4
Properties of 2 angles—3/8 in. back to back											
A_g, in.^{2}			3.10		2.64		2.14		1.64		
r_x, in.			0.574		0.581		0.589		0.597		
r_y, in.			1.27		1.26		1.24		1.23		
Properties of single angle											
r_z, in.			0.419		0.420		0.423		0.426		

ASD	LRFD
Ω_c = 1.67	ϕ_c = 0.90

[a] For Y-Y axis, welded or pretensioned bolted intermediate connectors must be used.
[b] For required number of intermediate connectors, see the discussion of Table 4-8.
[c] Shape is slender for compression with F_y = 36 ksi.
Note: Heavy line indicates KL/r equal to or greater than 200.

Table 4-11
Available Strength in Axial Compression, kips
Concentrically Loaded Single Angles

F_y = 36 ksi

L8

Shape		L8×8×											
		1 1/8		1		7/8		3/4		5/8		9/16[c]	
lb/ft		56.9		51.0		45.0		38.9		32.7		29.6	
Design		P_n/Ω_c ASD	$\phi_c P_n$ LRFD	P_n/Ω_c ASD	$\phi_c P_n$ LRFD	P_n/Ω_c ASD	$\phi_c P_n$ LRFD	P_n/Ω_c ASD	$\phi_c P_n$ LRFD	P_n/Ω_c ASD	$\phi_c P_n$ LRFD	P_n/Ω_c ASD	$\phi_c P_n$ LRFD
Effective length, KL (ft), with respect to least radius of gyration, r_z	0	362	544	326	489	287	431	248	373	208	313	181	272
	1	361	543	324	488	286	430	247	371	208	312	181	272
	2	358	538	321	483	283	426	245	368	206	309	179	269
	3	352	529	317	476	279	419	241	362	203	305	177	265
	4	345	518	310	465	273	410	236	355	198	298	173	260
	5	335	504	301	453	265	399	230	345	193	290	169	253
	6	324	487	291	437	257	386	222	334	187	281	163	245
	7	311	467	279	420	247	371	213	320	180	270	157	236
	8	297	446	267	401	235	354	204	306	172	258	150	226
	9	281	423	253	380	223	336	193	290	163	245	143	215
	10	265	399	238	358	211	317	182	274	154	231	135	204
	11	248	373	223	336	198	297	171	257	144	217	127	192
	12	231	348	208	312	184	277	159	239	135	202	119	179
	13	214	322	192	289	170	256	147	222	125	188	111	167
	14	197	296	177	266	157	236	136	204	115	173	102	154
	15	180	270	161	243	144	216	124	187	105	158	94.2	142
	16	163	245	147	220	130	196	113	170	95.9	144	86.0	129
	17	147	221	132	199	118	177	102	153	86.8	130	78.1	117
	18	132	198	118	178	106	159	91.3	137	77.9	117	70.5	106
	19	118	178	106	160	94.8	142	82.0	123	69.9	105	63.3	95.1
	20	107	160	95.9	144	85.5	129	74.0	111	63.1	94.9	57.1	85.9
	21	96.8	145	87.0	131	77.6	117	67.1	101	57.3	86.1	51.8	77.9
	22	88.2	133	79.2	119	70.7	106	61.1	91.9	52.2	78.4	47.2	71.0
	23	80.7	121	72.5	109	64.7	97.2	55.9	84.1	47.7	71.7	43.2	64.9
	24	74.1	111	66.6	100	59.4	89.3	51.4	77.2	43.8	65.9	39.7	59.6
	25	68.3	103	61.4	92.2	54.8	82.3	47.3	71.2	40.4	60.7	36.6	55.0
	26	63.1	94.9	56.7	85.3	50.6	76.1	43.8	65.8	37.4	56.1	33.8	50.8
Properties													
A_g, in.^{2}		16.8		15.1		13.3		11.5		9.69		8.77	
r_z, in.		1.56		1.56		1.57		1.57		1.58		1.58	

ASD	LRFD
$\Omega_c = 1.67$	$\phi_c = 0.90$

[c] Shape is slender for compression with F_y = 36 ksi.

L8

Table 4-11 (continued)
Available Strength in Axial Compression, kips
Concentrically Loaded Single Angles

F_y = 36 ksi

Shape		L8×8×		L8×6×									
		1/2[c]		1		7/8		3/4		5/8		9/16[c]	
lb/ft		26.4		44.2		39.1		33.8		28.5		25.7	
Design		P_n/Ω_c ASD	$\phi_c P_n$ LRFD	P_n/Ω_c ASD	$\phi_c P_n$ LRFD	P_n/Ω_c ASD	$\phi_c P_n$ LRFD	P_n/Ω_c ASD	$\phi_c P_n$ LRFD	P_n/Ω_c ASD	$\phi_c P_n$ LRFD	P_n/Ω_c ASD	$\phi_c P_n$ LRFD
Effective length, KL (ft), with respect to least radius of gyration, r_z	0	154	232	282	424	248	373	215	324	181	272	157	236
	1	154	231	281	422	247	371	214	322	180	270	157	235
	2	152	229	277	417	243	366	211	318	177	267	155	232
	3	150	226	271	407	238	357	207	311	174	261	151	227
	4	148	222	262	394	230	346	200	301	168	253	147	221
	5	144	216	252	378	221	332	192	289	161	243	141	212
	6	140	210	239	359	210	315	183	275	153	231	135	203
	7	135	203	225	338	198	297	172	259	145	217	127	192
	8	129	194	210	316	184	277	161	242	135	203	119	180
	9	124	186	194	292	170	256	149	224	125	188	111	167
	10	117	176	178	267	156	235	137	205	115	172	102	154
	11	111	166	161	242	142	213	124	187	104	157	93.5	141
	12	104	156	145	218	127	191	112	168	94.0	141	84.7	127
	13	97.1	146	129	194	113	170	99.7	150	83.9	126	76.0	114
	14	90.2	136	114	171	100	150	88.2	133	74.2	112	67.7	102
	15	83.3	125	99.6	150	87.4	131	77.1	116	64.9	97.6	59.7	89.7
	16	76.5	115	87.5	132	76.8	115	67.8	102	57.1	85.8	52.4	78.8
	17	69.9	105	77.5	117	68.1	102	60.0	90.2	50.5	76.0	46.5	69.8
	18	63.5	95.5	69.1	104	60.7	91.2	53.6	80.5	45.1	67.8	41.4	62.3
	19	57.3	86.1	62.1	93.3	54.5	81.9	48.1	72.2	40.5	60.8	37.2	55.9
	20	51.7	77.7	56.0	84.2	49.2	73.9	43.4	65.2	36.5	54.9	33.6	50.4
	21	46.9	70.5	50.8	76.4	44.6	67.0	39.3	59.1	33.1	49.8	30.4	45.8
	22	42.7	64.2										
	23	39.1	58.8										
	24	35.9	54.0										
	25	33.1	49.8										
	26	30.6	46.0										
Properties													
A_g, in.^{2}		7.84		13.1		11.5		9.99		8.41		7.61	
r_z, in.		1.59		1.28		1.28		1.29		1.29		1.30	

ASD	LRFD
$\Omega_c = 1.67$	$\phi_c = 0.90$

[c] Shape is slender for compression with F_y = 36 ksi.
Note: Heavy line indicates KL/r_z equal to or greater than 200.

Table 4-11 (continued)

Available Strength in Axial Compression, kips

Concentrically Loaded Single Angles

F_y = 36 ksi

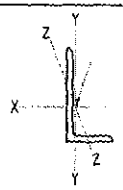

L8

Shape		L8×6×				L8×4×							
		1/2[c]		7/16[c]		1		7/8		3/4		5/8	
lb/ft		23.0		20.2		37.4		33.1		28.7		24.2	
Design		P_n/Ω_c ASD	$\phi_c P_n$ LRFD	P_n/Ω_c ASD	$\phi_c P_n$ LRFD	P_n/Ω_c ASD	$\phi_c P_n$ LRFD	P_n/Ω_c ASD	$\phi_c P_n$ LRFD	P_n/Ω_c ASD	$\phi_c P_n$ LRFD	P_n/Ω_c ASD	$\phi_c P_n$ LRFD
Effective length, KL (ft), with respect to least radius of gyration, r_z	0	134	201	110	165	239	360	211	317	183	275	154	231
	1	133	200	109	164	237	356	209	314	181	272	152	229
	2	132	198	108	163	229	345	202	304	175	264	148	222
	3	129	194	106	159	217	327	192	288	167	250	140	211
	4	125	188	103	155	202	303	178	268	155	233	130	196
	5	121	181	99.9	150	183	276	162	243	141	212	119	179
	6	115	173	95.9	144	163	245	144	217	125	189	106	160
	7	109	164	91.3	137	142	214	126	189	109	165	92.8	140
	8	103	155	86.3	130	121	182	107	161	93.5	141	79.5	120
	9	96.0	144	81.0	122	101	152	89.5	135	78.2	118	66.7	100
	10	88.8	133	75.4	113	82.5	124	73.1	110	64.0	96.2	54.8	82.3
	11	81.5	122	69.7	105	68.2	103	60.4	90.8	52.9	79.5	45.3	68.0
	12	74.2	111	63.9	96.1	57.3	86.1	50.8	76.3	44.5	66.8	38.0	57.2
	13	67.0	101	58.2	87.5	48.8	73.4	43.3	65.0	37.9	56.9	32.4	48.7
	14	60.0	90.1	52.6	79.0	42.1	63.3	37.3	56.1	32.7	49.1	27.9	42.0
	15	53.3	80.0	47.2	70.9								
	16	46.9	70.4	41.9	63.0								
	17	41.5	62.4	37.1	55.8								
	18	37.0	55.6	33.1	49.8								
	19	33.2	49.9	29.7	44.7								
	20	30.0	45.1	26.8	40.3								
	21	27.2	40.9	24.3	36.6								

Properties						
A_g, in.^{2}	6.80	5.99	11.1	9.79	8.49	7.16
r_z, in.	1.30	1.31	0.844	0.846	0.850	0.856

ASD	LRFD
$\Omega_c = 1.67$	$\phi_c = 0.90$

[c] Shape is slender for compression with F_y = 36 ksi.
Note: Heavy line indicates KL/r_z equal to or greater than 200.

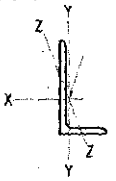

L8-L7

Table 4-11 (continued)
Available Strength in Axial Compression, kips
Concentrically Loaded Single Angles

F_y = 36 ksi

Shape		L8×4×						L7×4×					
		9/16[c]		1/2[c]		7/16[c]		3/4		5/8		1/2[c]	
lb/ft		21.9		19.6		17.2		26.2		22.1		17.9	
Design		P_n/Ω_c ASD	$\phi_c P_n$ LRFD	P_n/Ω_c ASD	$\phi_c P_n$ LRFD	P_n/Ω_c ASD	$\phi_c P_n$ LRFD	P_n/Ω_c ASD	$\phi_c P_n$ LRFD	P_n/Ω_c ASD	$\phi_c P_n$ LRFD	P_n/Ω_c ASD	$\phi_c P_n$ LRFD
Effective length, KL (ft), with respect to least radius of gyration, r_z	0	134	202	114	171	93.6	141	167	251	140	211	109	164
	1	133	200	113	170	92.8	140	165	248	139	208	108	163
	2	129	194	110	165	90.5	136	160	241	134	202	105	158
	3	123	185	105	158	86.7	130	152	228	128	192	100	151
	4	115	172	98.3	148	81.6	123	141	212	119	179	93.6	141
	5	105	158	90.4	136	75.6	114	129	194	108	163	85.7	129
	6	94.1	141	81.6	123	68.8	103	115	173	96.9	146	77.0	116
	7	82.8	124	72.4	109	61.5	92.5	100	151	84.8	127	67.8	102
	8	71.4	107	62.9	94.6	54.1	81.3	85.9	129	72.7	109	58.6	88.1
	9	60.4	90.8	53.8	80.8	46.8	70.3	72.0	108	61.1	91.8	49.7	74.6
	10	50.0	75.1	45.1	67.7	39.7	59.7	59.1	88.8	50.2	75.4	41.2	61.9
	11	41.3	62.1	37.3	56.0	33.1	49.8	48.8	73.4	41.5	62.3	34.0	51.1
	12	34.7	52.2	31.3	47.1	27.8	41.8	41.0	61.6	34.8	52.4	28.6	43.0
	13	29.6	44.5	26.7	40.1	23.7	35.7	34.9	52.5	29.7	44.6	24.4	36.6
	14	25.5	38.3	23.0	34.6	20.5	30.7	30.1	45.3	25.6	38.5	21.0	31.6
Properties													
A_g, in.^{2}		6.49		5.80		5.11		7.74		6.50		5.26	
r_z, in.		0.859		0.863		0.867		0.855		0.860		0.866	

ASD	LRFD
Ω_c = 1.67	ϕ_c = 0.90

[c] Shape is slender for compression with F_y = 36 ksi.
Note: Heavy line indicates KL/r_z equal to or greater than 200.

Table 4-11 (continued)

Available Strength in Axial Compression, kips

Concentrically Loaded Single Angles

F_y = 36 ksi

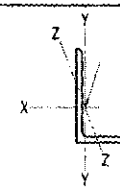

L7-L6

Shape		L7×4×				L6×6×							
		7/16[c]		3/8[c]		1		7/8		3/4		5/8	
lb/ft		15.7		13.6		37.4		33.1		28.7		24.2	
Design		P_n/Ω_c ASD	$\phi_c P_n$ LRFD	P_n/Ω_c ASD	$\phi_c P_n$ LRFD	P_n/Ω_c ASD	$\phi_c P_n$ LRFD	P_n/Ω_c ASD	$\phi_c P_n$ LRFD	P_n/Ω_c ASD	$\phi_c P_n$ LRFD	P_n/Ω_c ASD	$\phi_c P_n$ LRFD
Effective length, KL (ft), with respect to least radius of gyration, r_z	0	91.0	137	72.4	109	237	356	210	316	182	274	154	231
	1	90.2	136	71.8	108	236	354	209	314	181	273	153	230
	2	87.8	132	70.1	105	232	349	206	309	178	268	150	226
	3	83.8	126	67.2	101	226	339	200	301	174	261	146	220
	4	78.6	118	63.4	95.2	217	326	192	289	167	251	141	211
	5	72.4	109	58.8	88.3	206	310	183	275	159	239	134	201
	6	65.5	98.4	53.6	80.6	194	292	172	259	149	225	126	189
	7	58.1	87.4	48.1	72.3	181	272	160	241	139	209	117	176
	8	50.7	76.1	42.4	63.8	168	250	147	222	128	192	108	162
	9	43.4	65.2	36.8	55.3	151	228	134	202	116	175	98.1	148
	10	36.4	54.8	31.4	47.2	136	205	121	182	105	158	88.3	133
	11	30.2	45.3	26.3	39.5	121	182	108	162	93.3	140	78.6	118
	12	25.3	38.1	22.1	33.2	107	161	94.7	142	82.2	123	69.2	104
	13	21.6	32.5	18.8	28.3	93.0	140	82.4	124	71.5	108	60.3	90.6
	14	18.6	28.0	16.2	24.4	80.2	121	71.1	107	61.7	92.7	52.0	78.1
	15					69.9	105	61.9	93.1	53.7	80.7	45.3	68.1
	16					61.4	92.3	54.4	81.8	47.2	71.0	39.8	59.8
	17					54.4	81.7	48.2	72.5	41.8	62.9	35.3	53.0
	18					48.5	72.9	43.0	64.6	37.3	56.1	31.4	47.3
	19					43.5	65.4	38.6	58.0	33.5	50.3	28.2	42.4
Properties													
A_g, in.^{2}		4.63		4.00		11.0		9.75		8.46		7.13	
r_z, in.		0.869		0.873		1.17		1.17		1.17		1.17	

ASD	LRFD
$\Omega_c = 1.67$	$\phi_c = 0.90$

[c] Shape is slender for compression with F_y = 36 ksi.

Note: Heavy line indicates KL/r_z equal to or greater than 200.

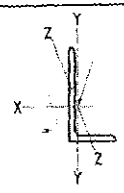

L6

Table 4-11 (continued)
Available Strength in Axial Compression, kips
Concentrically Loaded Single Angles

F_y = 36 ksi

Shape		L6×6×										L6×4×	
		9/16		1/2		7/16[c]		3/8[c]		5/16[c]		7/8	
lb/ft		21.9		19.6		17.2		14.9		12.4		27.2	
Design		P_n/Ω_c ASD	$\phi_c P_n$ LRFD	P_n/Ω_c ASD	$\phi_c P_n$ LRFD	P_n/Ω_c ASD	$\phi_c P_n$ LRFD	P_n/Ω_c ASD	$\phi_c P_n$ LRFD	P_n/Ω_c ASD	$\phi_c P_n$ LRFD	P_n/Ω_c ASD	$\phi_c P_n$ LRFD
Effective length, KL (ft), with respect to least radius of gyration, r_z	0	139	209	124	187	107	160	86.1	129	65.3	98.2	172	259
	1	138	208	124	186	106	159	85.7	129	65.1	97.8	171	257
	2	136	204	122	183	104	157	84.4	127	64.2	96.5	165	249
	3	132	199	118	178	102	153	82.4	124	62.8	94.4	157	236
	4	127	192	114	171	97.9	147	79.6	120	60.9	91.5	146	219
	5	121	182	109	163	93.3	140	76.2	115	58.5	87.9	133	200
	6	114	172	102	154	88.1	132	72.2	109	55.7	83.8	119	178
	7	106	160	95.3	143	82.2	124	67.8	102	52.6	79.1	104	156
	8	98.1	147	87.8	132	75.9	114	63.0	94.7	49.2	74.0	88.7	133
	9	89.5	134	80.0	120	69.4	104	58.0	87.2	45.7	68.7	74.3	112
	10	80.7	121	72.2	108	62.7	94.3	52.8	79.4	42.0	63.1	60.9	91.5
	11	72.0	108	64.4	96.7	56.1	84.4	47.7	71.7	38.3	57.5	50.3	75.6
	12	63.5	95.4	56.8	85.4	49.7	74.7	42.6	64.1	34.6	52.0	42.3	63.6
	13	55.4	83.3	49.6	74.5	43.5	65.4	37.7	56.7	31.0	46.5	36.0	54.2
	14	47.8	71.9	42.8	64.3	37.7	56.6	33.0	49.6	27.5	41.3	31.1	46.7
	15	41.7	62.6	37.3	56.0	32.8	49.3	28.8	43.2	24.1	36.2		
	16	36.6	55.0	32.8	49.2	28.8	43.3	25.3	38.0	21.2	31.8		
	17	32.4	48.8	29.0	43.6	25.5	38.4	22.4	33.7	18.8	28.2		
	18	28.9	43.5	25.9	38.9	22.8	34.2	20.0	30.0	16.7	25.2		
	19	26.0	39.0	23.2	34.9	20.5	30.7	17.9	27.0	15.0	22.6		
Properties													
A_g, in.^{2}		6.45		5.77		5.08		4.38		3.67		8.00	
r_z, in.		1.18		1.18		1.18		1.19		1.19		0.854	

ASD	LRFD
Ω_c = 1.67	ϕ_c = 0.90

[c] Shape is slender for compression with F_y = 36 ksi.
Note: Heavy line indicates KL/r_z equal to or greater than 200.

Table 4-11 (continued)

Available Strength in Axial Compression, kips

Concentrically Loaded Single Angles

F_y = 36 ksi

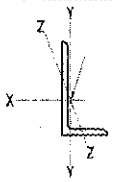

L6

Shape		L6×4×									
		3/4		5/8		9/16		1/2		7/16[c]	
lb/ft		23.6		20.0		18.1		16.2		14.3	
Design		P_n/Ω_c	$\phi_c P_n$	P_n/Ω_c	$\phi_c P_n$	P_n/Ω_c	$\phi_c P_n$	P_n/Ω_c	$\phi_c P_n$	P_n/Ω_c	$\phi_c P_n$
		ASD	LRFD	ASD	LRFD	ASD	LRFD	ASD	LRFD	ASD	LRFD
Effective length, KL (ft), with respect to least radius of gyration, r_z	0	150	225	126	190	114	172	102	154	87.7	132
	1	148	223	125	188	113	170	101	152	86.8	130
	2	144	216	121	182	110	165	98.3	148	84.3	127
	3	136	205	115	173	104	157	93.5	140	80.3	121
	4	127	191	107	161	97.2	146	87.0	131	74.9	113
	5	116	174	97.7	147	88.6	133	79.4	119	68.6	103
	6	103	155	87.3	131	79.2	119	71.0	107	61.6	92.6
	7	90.1	135	76.4	115	69.4	104	62.3	93.6	54.2	81.5
	8	77.2	116	65.5	98.4	59.5	89.4	53.5	80.3	46.8	70.3
	9	64.7	97.3	55.0	82.6	50.0	75.1	45.0	67.6	39.6	59.5
	10	53.1	79.8	45.1	67.8	41.1	61.8	37.0	55.6	32.8	49.3
	11	43.9	65.9	37.3	56.1	34.0	51.0	30.6	46.0	27.1	40.7
	12	36.9	55.4	31.3	47.1	28.5	42.9	25.7	38.6	22.8	34.2
	13	31.4	47.2	26.7	40.1	24.3	36.5	21.9	32.9	19.4	29.2
	14	27.1	40.7	23.0	34.6	21.0	31.5	18.9	28.4	16.7	25.1
Properties											
A_g, in.^{2}		6.94		5.86		5.31		4.75		4.18	
r_z, in.		0.856		0.859		0.861		0.864		0.867	
ASD		LRFD		[c] Shape is slender for compression with F_y = 36 ksi.							
Ω_c = 1.67		ϕ_c = 0.90		Note: Heavy line indicates KL/r_z equal to or greater than 200.							

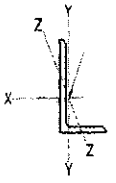

L6

Table 4-11 (continued)
Available Strength in Axial Compression, kips
Concentrically Loaded Single Angles

F_y = 36 ksi

Shape		L6×4×				L6×3½×					
		3/8[c]		5/16[c]		1/2		3/8[c]		5/16[c]	
lb/ft		12.3		10.3		15.3		11.7		9.80	
Design		P_n/Ω_c ASD	$\phi_c P_n$ LRFD	P_n/Ω_c ASD	$\phi_c P_n$ LRFD	P_n/Ω_c ASD	$\phi_c P_n$ LRFD	P_n/Ω_c ASD	$\phi_c P_n$ LRFD	P_n/Ω_c ASD	$\phi_c P_n$ LRFD
Effective length, KL (ft), with respect to least radius of gyration, r_z	0	71.0	107	54.0	81.1	97.0	146	67.6	102	51.5	77.3
	1	70.3	106	53.5	80.4	95.7	144	66.8	100	50.9	76.5
	2	68.4	103	52.2	78.5	92.0	138	64.5	96.9	49.3	74.1
	3	65.4	98.3	50.1	75.3	86.1	129	60.8	91.3	46.8	70.3
	4	61.3	92.2	47.3	71.1	78.5	118	55.9	84.1	43.4	65.2
	5	56.5	84.9	44.0	66.1	69.6	105	50.3	75.5	39.4	59.3
	6	51.1	76.8	40.2	60.4	60.2	90.4	44.1	66.3	35.1	52.7
	7	45.4	68.2	36.1	54.3	50.6	76.1	37.8	56.8	30.5	45.9
	8	39.6	59.5	31.9	48.0	41.5	62.4	31.6	47.5	26.0	39.1
	9	33.9	50.9	27.8	41.7	33.1	49.8	25.8	38.6	21.7	32.7
	10	28.5	42.8	23.8	35.7	26.8	40.3	20.9	31.4	17.7	26.7
	11	23.6	35.4	20.0	30.0	22.2	33.3	17.3	26.0	14.7	22.0
	12	19.8	29.8	16.8	25.2	18.6	28.0	14.5	21.8	12.3	18.5
	13	16.9	25.4	14.3	21.5						
	14	14.6	21.9	12.3	18.5						
Properties											
A_g, in.[2]		3.61		3.03		4.50		3.44		2.89	
r_z, in.		0.870		0.874		0.756		0.763		0.767	
ASD		LRFD		[c] Shape is slender for compression with F_y = 36 ksi. Note: Heavy line indicates KL/r_z equal to or greater than 200.							
Ω_c = 1.67		ϕ_c = 0.90									

Table 4-11 (continued)

Available Strength in Axial Compression, kips

Concentrically Loaded Single Angles

F_y = 36 ksi

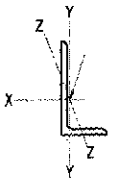

L5

Shape		L5×5×											
		7/8		3/4		5/8		1/2		7/16		3/8[c]	
lb/ft		27.2		23.6		20.0		16.2		14.3		12.3	
Design		P_n/Ω_c ASD	$\phi_c P_n$ LRFD	P_n/Ω_c ASD	$\phi_c P_n$ LRFD	P_n/Ω_c ASD	$\phi_c P_n$ LRFD	P_n/Ω_c ASD	$\phi_c P_n$ LRFD	P_n/Ω_c ASD	$\phi_c P_n$ LRFD	P_n/Ω_c ASD	$\phi_c P_n$ LRFD
Effective length, KL (ft), with respect to least radius of gyration, r_z	0	172	259	150	226	127	191	103	155	91.0	137	77.3	116
	1	171	257	149	224	126	190	102	154	90.3	136	76.8	115
	2	167	251	146	219	123	185	100	150	88.2	133	75.0	113
	3	160	241	140	210	118	178	96.2	145	84.8	127	72.2	109
	4	152	228	132	199	112	168	91.0	137	80.2	121	68.4	103
	5	141	212	123	185	104	157	84.8	127	74.8	112	63.9	96.0
	6	129	194	113	169	95.4	143	77.7	117	68.6	103	58.7	88.2
	7	116	175	102	153	86.0	129	70.1	105	61.9	93.1	53.1	79.9
	8	103	155	90.0	135	76.3	115	62.3	93.6	55.1	82.8	47.4	71.2
	9	89.9	135	78.6	118	66.7	100	54.5	81.9	48.2	72.4	41.6	62.5
	10	77.2	116	67.4	101	57.3	86.1	46.9	70.5	41.5	62.4	35.9	54.0
	11	65.1	97.8	56.9	85.5	48.4	72.7	39.7	59.6	35.2	52.9	30.6	46.0
	12	54.7	82.2	47.8	71.8	40.7	61.1	33.3	50.1	29.6	44.4	25.7	38.7
	13	46.6	70.0	40.7	61.2	34.6	52.1	28.4	42.7	25.2	37.9	21.9	32.9
	14	40.2	60.4	35.1	52.8	29.9	44.9	24.5	36.8	21.7	32.6	18.9	28.4
	15	35.0	52.6	30.6	46.0	26.0	39.1	21.3	32.1	18.9	28.4	16.5	24.7
	16	30.8	46.2	26.9	40.4	22.9	34.4	18.8	28.2	16.6	25.0	14.5	21.7
Properties													
A_g, in.^{2}		6.00		6.98		5.90		4.79		4.22		3.65	
r_z, in.		0.971		0.972		0.975		0.980		0.983		0.986	

ASD	LRFD
Ω_c = 1.67	ϕ_c = 0.90

[c] Shape is slender for compression with F_y = 36 ksi.

Note: Heavy line indicates KL/r_z equal to or greater than 200.

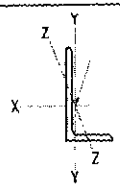

L5

Table 4-11 (continued)
Available Strength in Axial Compression, kips
Concentrically Loaded Single Angles

F_y = 36 ksi

Shape		L5×5×		L5×3½×									
		5/16[c]		3/4		5/8		1/2		3/8[c]		5/16[c]	
lb/ft		10.3		19.8		16.8		13.6		10.4		8.70	
Design		P_n/Ω_c ASD	$\phi_c P_n$ LRFD	P_n/Ω_c ASD	$\phi_c P_n$ LRFD	P_n/Ω_c ASD	$\phi_c P_n$ LRFD	P_n/Ω_c ASD	$\phi_c P_n$ LRFD	P_n/Ω_c ASD	$\phi_c P_n$ LRFD	P_n/Ω_c ASD	$\phi_c P_n$ LRFD
Effective length, KL (ft), with respect to least radius of gyration, r_z	0	60.4	90.7	126	190	106	160	86.2	130	64.6	97.1	50.3	75.6
	1	59.9	90.1	124	187	105	158	85.1	128	63.8	95.9	49.7	74.7
	2	58.7	88.2	119	179	101	151	81.7	123	61.3	92.2	48.0	72.1
	3	56.6	85.1	111	168	94.0	141	76.4	115	57.5	86.4	45.2	67.9
	4	53.9	81.0	101	152	85.5	128	69.5	104	52.4	78.8	41.5	62.4
	5	50.6	76.0	89.5	135	75.6	114	61.6	92.5	46.6	70.1	37.3	56.0
	6	46.8	70.4	77.0	116	65.1	97.8	53.1	79.8	40.4	60.7	32.6	49.1
	7	42.7	64.2	64.5	96.9	54.5	81.9	44.6	67.0	34.1	51.2	27.9	41.9
	8	38.4	57.8	52.5	78.9	44.4	66.8	36.4	54.7	28.0	42.1	23.3	35.0
	9	34.1	51.2	41.7	62.7	35.4	53.1	29.0	43.6	22.4	33.7	19.0	28.5
	10	29.8	44.8	33.8	50.8	28.6	43.0	23.5	35.3	18.1	27.3	15.4	23.1
	11	25.7	38.6	27.9	42.0	23.7	35.6	19.4	29.2	15.0	22.5	12.7	19.1
	12	21.8	32.8	23.5	35.3	19.9	29.9	16.3	24.5	12.6	18.9	10.7	16.0
	13	18.6	27.9										
	14	16.0	24.1										
	15	14.0	21.0										
	16	12.3	18.4										
Properties													
A_g, in.^{2}		3.07		5.85		4.93		4.00		3.05		2.56	
r_z, in.		0.990		0.744		0.746		0.750		0.755		0.758	

ASD	LRFD
Ω_c = 1.67	ϕ_c = 0.90

[c] Shape is slender for compression with F_y = 36 ksi.
Note: Heavy line indicates KL/r_z equal to or greater than 200.

Table 4-11 (continued)

Available Strength in Axial Compression, kips

Concentrically Loaded Single Angles

F_y = 36 ksi

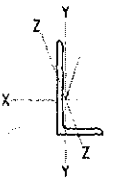

L5

Shape		L5×3½×		L5×3×									
		¼[c]		½		7/16		⅜[c]		5/16[c]		¼[c]	
lb/ft		7.00		12.8		11.3		9.80		8.20		6.60	
Design		P_n/Ω_c	$\phi_c P_n$	P_n/Ω_c	$\phi_c P_n$	P_n/Ω_c	$\phi_c P_n$	P_n/Ω_c	$\phi_c P_n$	P_n/Ω_c	$\phi_c P_n$	P_n/Ω_c	$\phi_c P_n$
		ASD	LRFD	ASD	LRFD	ASD	LRFD	ASD	LRFD	ASD	LRFD	ASD	LRFD
Effective length, KL (ft), with respect to least radius of gyration, r_z	0	35.9	53.9	80.8	122	71.4	107	60.6	91.1	47.4	71.2	33.6	50.5
	1	35.5	53.4	79.4	119	70.1	105	59.5	89.5	46.6	70.1	33.1	49.8
	2	34.4	51.7	75.1	113	66.3	99.7	56.4	84.8	44.4	66.7	31.7	47.7
	3	32.6	49.0	68.5	103	60.5	91.0	51.6	77.6	40.9	61.4	29.6	44.4
	4	30.3	45.6	60.2	90.5	53.3	80.0	45.5	68.5	36.4	54.8	26.7	40.2
	5	27.6	41.4	51.0	76.7	45.2	67.9	38.8	58.3	31.4	47.2	23.5	35.3
	6	24.6	36.9	41.7	62.7	37.0	55.5	31.9	47.9	26.2	39.4	20.1	30.2
	7	21.4	32.2	32.8	49.3	29.1	43.8	25.3	38.0	21.2	31.9	16.7	25.0
	8	18.3	27.5	25.2	37.9	22.4	33.7	19.5	29.3	16.6	24.9	13.4	20.2
	9	15.3	23.0	19.9	29.9	17.7	26.6	15.4	23.1	13.1	19.7	10.6	16.0
	10	12.5	18.8	16.1	24.2	14.3	21.5	12.5	18.7	10.6	15.9	8.61	12.9
	11	10.3	15.5										
	12	8.69	13.1										
Properties													
A_g, in.^{2}		2.07		3.75		3.31		2.86		2.41		1.94	
r_z, in.		0.761		0.642		0.644		0.646		0.649		0.652	

ASD	LRFD
Ω_c = 1.67	ϕ_c = 0.90

[c] Shape is slender for compression with F_y = 36 ksi.

Note: Heavy line indicates KL/r_z equal to or greater than 200.

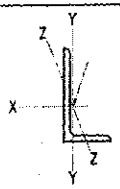

L4

Table 4-11 (continued)
Available Strength in Axial Compression, kips
Concentrically Loaded Single Angles

F_y = 36 ksi

Shape		L4×4×											
		3/4		5/8		1/2		7/16		3/8		5/16	
lb/ft		18.5		15.7		12.8		11.3		9.80		8.20	
Design		P_n/Ω_c ASD	$\phi_c P_n$ LRFD	P_n/Ω_c ASD	$\phi_c P_n$ LRFD	P_n/Ω_c ASD	$\phi_c P_n$ LRFD	P_n/Ω_c ASD	$\phi_c P_n$ LRFD	P_n/Ω_c ASD	$\phi_c P_n$ LRFD	P_n/Ω_c ASD	$\phi_c P_n$ LRFD
Effective length, KL (ft), with respect to least radius of gyration, r_z	0	117	176	99.4	149	80.8	122	71.1	107	61.7	92.7	51.6	77.5
	1	116	174	98.1	147	79.8	120	70.3	106	60.9	91.5	50.9	76.6
	2	111	168	94.5	142	76.9	116	67.7	102	58.6	88.1	49.1	73.8
	3	105	157	88.7	133	72.2	108	63.5	95.5	55.1	82.8	46.1	69.3
	4	95.8	144	81.2	122	66.1	99.3	58.2	87.5	50.5	75.9	42.3	63.6
	5	85.5	128	72.4	109	59.0	88.7	52.0	78.1	45.1	67.8	37.8	56.9
	6	74.4	112	63.0	94.7	51.4	77.2	45.3	68.0	39.3	59.1	33.0	49.6
	7	63.1	94.8	53.5	80.3	43.6	65.6	38.4	57.8	33.4	50.2	28.1	42.2
	8	52.2	78.4	44.2	66.5	36.1	54.3	31.8	47.9	27.7	41.7	23.3	35.1
	9	42.0	63.1	35.6	53.5	29.1	43.7	25.7	38.6	22.4	33.6	18.9	28.4
	10	34.0	51.1	28.8	43.3	23.6	35.4	20.8	31.3	18.1	27.2	15.3	23.0
	11	28.1	42.3	23.8	35.8	19.5	29.3	17.2	25.8	15.0	22.5	12.6	19.0
	12	23.6	35.5	20.0	30.1	16.4	24.6	14.4	21.7	12.6	18.9	10.6	15.9
	13											9.04	13.6
Properties													
A_g, in.^{2}		5.44		4.61		3.75		3.30		2.86		2.40	
r_z, in.		0.774		0.774		0.776		0.777		0.779		0.781	

ASD	LRFD
$\Omega_c = 1.67$	$\phi_c = 0.90$

Note: Heavy line indicates KL/r_z equal to or greater than 200.

Table 4-11 (continued)

Available Strength in Axial Compression, kips

Concentrically Loaded Single Angles

F_y = 36 ksi

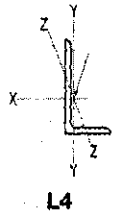

L4

Shape		L4×4×		L4×3½×								L4×3×	
		¼[c]		½		⅜		5/16		¼[c]		⅝	
lb/ft		6.60		11.9		9.10		7.70		6.20		13.6	
Design		P_n/Ω_c ASD	$\phi_c P_n$ LRFD	P_n/Ω_c ASD	$\phi_c P_n$ LRFD	P_n/Ω_c ASD	$\phi_c P_n$ LRFD	P_n/Ω_c ASD	$\phi_c P_n$ LRFD	P_n/Ω_c ASD	$\phi_c P_n$ LRFD	P_n/Ω_c ASD	$\phi_c P_n$ LRFD
Effective length, KL (ft), with respect to least radius of gyration, r_z	0	37.9	57.0	75.4	113	57.8	86.8	48.4	72.7	35.8	53.8	86.0	129
	1	37.5	56.4	74.3	112	56.9	85.6	47.7	71.6	35.3	53.1	84.4	127
	2	36.3	54.5	71.1	107	54.5	81.9	45.6	68.6	33.9	51.0	79.7	120
	3	34.3	51.5	66.0	99.3	50.6	76.1	42.4	63.8	31.8	47.7	72.5	109
	4	31.7	47.6	59.6	89.5	45.7	68.7	38.3	57.6	29.0	43.5	63.4	95.3
	5	28.6	43.0	52.1	78.4	40.0	60.2	33.6	50.5	25.7	38.6	53.4	80.3
	6	25.3	38.0	44.3	66.6	34.1	51.2	28.7	43.1	22.2	33.4	43.3	65.1
	7	21.8	32.8	36.6	54.9	28.2	42.3	23.7	35.6	18.7	28.1	33.8	50.9
	8	18.4	27.7	29.3	44.0	22.6	34.0	19.1	28.7	15.3	23.1	25.9	38.9
	9	15.2	22.9	23.1	34.8	17.9	26.8	15.1	22.7	12.3	18.4	20.5	30.8
	10	12.4	18.6	18.7	28.1	14.5	21.7	12.2	18.3	9.93	14.9	16.6	24.9
	11	10.2	15.3	15.5	23.3	12.0	18.0	10.1	15.2	8.21	12.3		
	12	8.58	12.9					8.48	12.7	6.90	10.4		
	13	7.31	11.0										
Properties													
A_g, in.^{2}		1.93		3.50		2.68		2.25		1.82		3.99	
r_z, in.		0.783		0.716		0.719		0.721		0.723		0.631	

ASD	LRFD
Ω_c = 1.67	ϕ_c = 0.90

[c] Shape is slender for compression with F_y = 36 ksi.

Note: Heavy line indicates KL/r_z equal to or greater than 200.

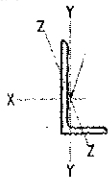

L4–L3½

Table 4-11 (continued)
Available Strength in Axial Compression, kips

F_y = 36 ksi

Concentrically Loaded Single Angles

Shape		L4×3×								L3½×3½×			
		½		⅜		5/16		¼[c]		½		7/16	
lb/ft		11.1		8.50		7.20		5.80		11.1		9.80	
Design		P_n/Ω_c ASD	$\phi_c P_n$ LRFD	P_n/Ω_c ASD	$\phi_c P_n$ LRFD	P_n/Ω_c ASD	$\phi_c P_n$ LRFD	P_n/Ω_c ASD	$\phi_c P_n$ LRFD	P_n/Ω_c ASD	$\phi_c P_n$ LRFD	P_n/Ω_c ASD	$\phi_c P_n$ LRFD
Effective length, KL (ft), with respect to least radius of gyration, r_z	0	70.1	105	53.7	80.7	44.9	67.5	33.2	49.9	70.1	105	62.3	93.6
	1	68.7	103	52.7	79.2	44.1	66.3	32.7	49.1	68.9	104	61.3	92.1
	2	65.0	97.6	49.8	74.8	41.7	62.7	31.0	46.7	65.6	98.6	58.4	87.7
	3	59.1	88.8	45.3	68.2	38.0	57.1	28.5	42.9	60.4	90.8	53.8	80.8
	4	51.8	77.8	39.8	59.8	33.4	50.2	25.3	38.1	53.9	80.9	48.0	72.1
	5	43.7	65.6	33.6	50.5	28.2	42.4	21.8	32.7	46.4	69.8	41.4	62.2
	6	35.5	53.3	27.3	41.1	23.0	34.6	18.1	27.1	38.8	58.3	34.6	52.0
	7	27.7	41.7	21.4	32.2	18.1	27.2	14.5	21.8	31.3	47.0	28.0	42.0
	8	21.2	31.9	16.4	24.7	13.9	20.9	11.3	16.9	24.4	36.7	21.9	32.9
	9	16.8	25.2	13.0	19.5	11.0	16.5	8.89	13.4	19.3	29.0	17.3	26.0
	10	13.6	20.4	10.5	15.8	8.88	13.3	7.20	10.8	15.6	23.5	14.0	21.0
	11									12.9	19.4	11.6	17.4
Properties													
A_g, in.^{2}		3.25		2.49		2.09		1.69		3.25		2.89	
r_z, in.		0.633		0.636		0.638		0.639		0.679		0.681	

ASD	LRFD
Ω_c = 1.67	ϕ_c = 0.90

[c] Shape is slender for compression with F_y = 36 ksi.

Note: Heavy line indicates KL/r_z equal to or greater than 200.

Table 4-11 (continued)

Available Strength in Axial Compression, kips

Concentrically Loaded Single Angles

$F_y = 36$ ksi

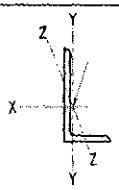

L3½

Shape		L3½×3½×						L3½×3×					
		3/8		5/16		1/4[c]		1/2		7/16		3/8	
lb/ft		8.50		7.20		5.80		10.2		9.10		7.90	
Design		P_n/Ω_c ASD	$\phi_c P_n$ LRFD	P_n/Ω_c ASD	$\phi_c P_n$ LRFD	P_n/Ω_c ASD	$\phi_c P_n$ LRFD	P_n/Ω_c ASD	$\phi_c P_n$ LRFD	P_n/Ω_c ASD	$\phi_c P_n$ LRFD	P_n/Ω_c ASD	$\phi_c P_n$ LRFD
Effective length, KL (ft), with respect to least radius of gyration, r_z	0	53.9	81.0	45.3	68.0	35.4	53.2	65.1	97.8	57.6	86.5	50.0	75.2
	1	53.0	79.7	44.5	66.9	34.8	52.3	63.8	95.9	56.4	84.8	49.0	73.7
	2	50.5	75.9	42.4	63.8	33.2	50.0	60.1	90.4	53.2	79.9	46.2	69.5
	3	46.6	70.0	39.1	58.8	30.8	46.3	54.5	81.8	48.2	72.4	41.9	63.0
	4	41.6	62.5	35.0	52.5	27.6	41.5	47.4	71.2	42.0	63.1	36.6	54.9
	5	35.9	54.0	30.2	45.4	24.0	36.1	39.6	59.6	35.2	52.8	30.6	46.1
	6	30.0	45.1	25.3	38.0	20.3	30.5	31.9	47.9	28.3	42.5	24.7	37.1
	7	24.3	36.5	20.5	30.8	16.6	24.9	24.6	36.9	21.9	32.9	19.1	28.7
	8	19.0	28.6	16.1	24.2	13.1	19.7	18.8	28.3	16.7	25.2	14.6	22.0
	9	15.0	22.6	12.7	19.1	10.4	15.6	14.9	22.3	13.2	19.9	11.6	17.4
	10	12.2	18.3	10.3	15.5	8.40	12.6	12.0	18.1	10.7	16.1	9.37	14.1
	11	10.1	15.1	8.50	12.8	6.94	10.4						
Properties													
A_g, in.^{2}		2.50		2.10		1.70		3.02		2.67		2.32	
r_z, in.		0.683		0.685		0.688		0.618		0.620		0.622	

ASD	LRFD
$\Omega_c = 1.67$	$\phi_c = 0.90$

[c] Shape is slender for compression with $F_y = 36$ ksi.

Note: Heavy line indicates KL/r_z equal to or greater than 200.

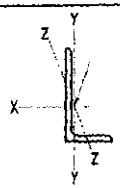

L3½

Table 4-11 (continued)
Available Strength in Axial Compression, kips
Concentrically Loaded Single Angles

F_y = 36 ksi

Shape		L3½×3×				L3½×2½×							
		5/16		1/4[c]		1/2		3/8		5/16		1/4[c]	
lb/ft		6.60		5.40		9.40		7.20		6.10		4.90	
Design		P_n/Ω_c ASD	$\phi_c P_n$ LRFD	P_n/Ω_c ASD	$\phi_c P_n$ LRFD	P_n/Ω_c ASD	$\phi_c P_n$ LRFD	P_n/Ω_c ASD	$\phi_c P_n$ LRFD	P_n/Ω_c ASD	$\phi_c P_n$ LRFD	P_n/Ω_c ASD	$\phi_c P_n$ LRFD
Effective length, KL (ft), with respect to least radius of gyration, r_z	0	42.0	63.2	32.9	49.4	59.7	89.7	45.7	68.7	38.6	58.0	30.2	45.3
	1	41.2	62.0	32.3	48.5	58.1	87.4	44.5	66.9	37.6	56.5	29.4	44.2
	2	38.9	58.4	30.5	45.9	53.6	80.6	41.1	61.8	34.7	52.2	27.3	41.0
	3	35.3	53.0	27.8	41.8	46.9	70.5	36.0	54.1	30.5	45.8	24.1	36.2
	4	30.8	46.3	24.4	36.7	38.9	58.5	29.9	45.0	25.4	38.1	20.2	30.4
	5	25.8	38.8	20.7	31.1	30.6	45.9	23.6	35.4	20.0	30.1	16.1	24.3
	6	20.9	31.3	16.9	25.3	22.7	34.2	17.6	26.4	15.0	22.6	12.3	18.4
	7	16.2	24.3	13.2	19.9	16.7	25.1	12.9	19.4	11.0	16.6	9.04	13.6
	8	12.4	18.6	10.2	15.3	12.8	19.2	9.90	14.9	8.45	12.7	6.92	10.4
	9	9.78	14.7	8.03	12.1							5.47	8.22
	10	7.93	11.9	6.50	9.78								
Properties													
A_g, in.^{2}		1.95		1.58		2.77		2.12		1.79		1.45	
r_z, in.		0.624		0.628		0.532		0.535		0.538		0.541	

ASD	LRFD
Ω_c = 1.67	ϕ_c = 0.90

[c] Shape is slender for compression with F_y = 36 ksi.

Note: Heavy line indicates KL/r_z equal to or greater than 200.

Table 4-11 (continued)

Available Strength in Axial Compression, kips

Concentrically Loaded Single Angles

F_y = 36 ksi

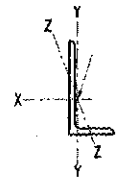

L3

Shape		L3×3×											
		1/2		7/16		3/8		5/16		1/4		3/16[c]	
lb/ft		9.40		8.30		7.20		6.10		4.90		3.71	
Design		P_n/Ω_c	$\phi_c P_n$	P_n/Ω_c	$\phi_c P_n$	P_n/Ω_c	$\phi_c P_n$	P_n/Ω_c	$\phi_c P_n$	P_n/Ω_c	$\phi_c P_n$	P_n/Ω_c	$\phi_c P_n$
		ASD	LRFD	ASD	LRFD	ASD	LRFD	ASD	LRFD	ASD	LRFD	ASD	LRFD
Effective length, KL (ft), with respect to least radius of gyration, r_z	0	59.5	89.4	52.4	78.7	45.5	68.4	38.4	57.7	31.0	46.7	21.4	32.2
	1	58.2	87.4	51.2	77.0	44.5	66.8	37.5	56.4	30.4	45.6	21.0	31.6
	2	54.4	81.7	47.9	71.9	41.6	62.5	35.1	52.7	28.4	42.7	19.8	29.7
	3	48.6	73.0	42.8	64.3	37.2	55.9	31.4	47.2	25.4	38.2	17.9	26.9
	4	41.5	62.4	36.5	54.9	31.8	47.7	26.9	40.4	21.8	32.7	15.5	23.3
	5	33.9	50.9	29.8	44.8	25.9	39.0	22.0	33.0	17.8	26.8	13.0	19.5
	6	26.4	39.7	23.3	35.0	20.3	30.5	17.2	25.8	14.0	21.0	10.4	15.6
	7	19.8	29.7	17.4	26.2	15.2	22.8	12.9	19.4	10.5	15.8	7.97	12.0
	8	15.1	22.8	13.3	20.0	11.6	17.5	9.87	14.8	8.04	12.1	6.10	9.18
	9	12.0	18.0	10.5	15.8	9.18	13.8	7.80	11.7	6.35	9.54	4.82	7.25
Properties													
A_g, in.^{2}		2.76		2.43		2.11		1.78		1.44		1.09	
r_z, in.		0.580		0.580		0.581		0.583		0.585		0.586	

ASD	LRFD
Ω_c = 1.67	ϕ_c = 0.90

[c] Shape is slender for compression with F_y = 36 ksi.

Note: Heavy line indicates KL/r_z equal to or greater than 200.

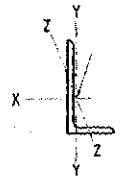

L3

Table 4-11 (continued)
Available Strength in Axial Compression, kips
Concentrically Loaded Single Angles

F_y = 36 ksi

Shape		L3×2½×											
		½		7/16		3/8		5/16		¼		3/16[c]	
lb/ft		8.50		7.60		6.60		5.60		4.50		3.39	
Design		P_n/Ω_c	$\phi_c P_n$	P_n/Ω_c	$\phi_c P_n$	P_n/Ω_c	$\phi_c P_n$	P_n/Ω_c	$\phi_c P_n$	P_n/Ω_c	$\phi_c P_n$	P_n/Ω_c	$\phi_c P_n$
		ASD	LRFD	ASD	LRFD	ASD	LRFD	ASD	LRFD	ASD	LRFD	ASD	LRFD
Effective length, KL (ft), with respect to least radius of gyration, r_z	0	53.9	81.0	47.9	71.9	41.6	62.5	35.1	52.8	28.5	42.8	19.7	29.5
	1	52.4	78.7	46.5	69.9	40.4	60.8	34.2	51.3	27.7	41.6	19.2	28.8
	2	48.1	72.3	42.7	64.2	37.1	55.8	31.4	47.2	25.4	38.2	17.8	26.7
	3	41.7	62.7	37.0	55.7	32.2	48.4	27.2	41.0	22.1	33.2	15.6	23.5
	4	34.2	51.4	30.3	45.6	26.4	39.7	22.4	33.6	18.2	27.3	13.1	19.7
	5	26.4	39.8	23.5	35.3	20.5	30.8	17.3	26.1	14.1	21.2	10.4	15.6
	6	19.3	29.0	17.1	25.8	15.0	22.5	12.7	19.1	10.3	15.6	7.86	11.8
	7	14.2	21.3	12.6	18.9	11.0	16.5	9.32	14.0	7.60	11.4	5.78	8.69
	8	10.9	16.3	9.64	14.5	8.41	12.6	7.13	10.7	5.82	8.75	4.43	6.65
Properties													
A_g, in.^{2}		2.50		2.22		1.93		1.63		1.32		1.00	
r_z, in.		0.516		0.516		0.517		0.518		0.520		0.521	

ASD	LRFD
$\Omega_c = 1.67$	$\phi_c = 0.90$

[c] Shape is slender for compression with F_y = 36 ksi.
Note: Heavy line indicates KL/r_z equal to or greater than 200.

Table 4-11 (continued)

Available Strength in Axial Compression, kips

Concentrically Loaded Single Angles

F_y = 36 ksi

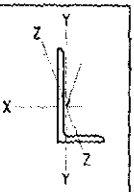

L3-L2$^1/_2$

Shape		L3×2×										L2$^1/_2$×2$^1/_2$×	
		$^1/_2$		$^3/_8$		$^5/_{16}$		$^1/_4$		$^3/_{16}$[c]		$^1/_2$	
lb/ft		7.70		5.90		5.00		4.10		3.07		7.70	
Design		P_n/Ω_c ASD	$\phi_c P_n$ LRFD	P_n/Ω_c ASD	$\phi_c P_n$ LRFD	P_n/Ω_c ASD	$\phi_c P_n$ LRFD	P_n/Ω_c ASD	$\phi_c P_n$ LRFD	P_n/Ω_c ASD	$\phi_c P_n$ LRFD	P_n/Ω_c ASD	$\phi_c P_n$ LRFD
Effective length, KL (ft), with respect to least radius of gyration, r_z	0	48.7	73.2	37.7	56.7	31.9	48.0	25.9	38.9	18.0	27.1	48.7	73.2
	1	46.7	70.2	36.2	54.4	30.6	46.0	24.8	37.3	17.4	26.1	47.1	70.9
	2	41.2	61.9	31.9	48.0	27.0	40.6	22.0	33.0	15.6	23.4	42.7	64.2
	3	33.4	50.2	25.9	38.9	22.0	33.0	17.9	26.9	13.0	19.5	36.3	54.5
	4	24.9	37.4	19.3	29.1	16.5	24.7	13.5	20.2	10.0	15.1	28.8	43.3
	5	17.0	25.6	13.3	19.9	11.3	17.0	9.31	14.0	7.23	10.9	21.5	32.3
	6	11.8	17.8	9.21	13.8	7.86	11.8	6.46	9.71	5.03	7.56	15.2	22.8
	7	8.70	13.1	6.77	10.2	5.78	8.68	4.75	7.14	3.70	5.56	11.1	16.7
	8											8.53	12.8
Properties													
A_g, in.^{2}		2.26		1.75		1.48		1.20		0.917		2.26	
r_z, in.		0.425		0.426		0.428		0.431		0.435		0.481	

ASD	LRFD
Ω_c = 1.67	ϕ_c = 0.90

[c] Shape is slender for compression with F_y = 36 ksi.

Note: Heavy line indicates KL/r_z equal to or greater than 200.

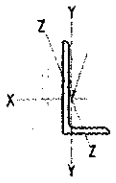

L2½

Table 4-11 (continued)
Available Strength in Axial Compression, kips
Concentrically Loaded Single Angles

F_y = 36 ksi

Shape		L2½×2½×								L2½×2×	
		3/8		5/16		1/4		3/16[c]		3/8	
lb/ft		5.90		5.00		4.10		3.07		5.30	
Design		P_n/Ω_c ASD	$\phi_c P_n$ LRFD	P_n/Ω_c ASD	$\phi_c P_n$ LRFD	P_n/Ω_c ASD	$\phi_c P_n$ LRFD	P_n/Ω_c ASD	$\phi_c P_n$ LRFD	P_n/Ω_c ASD	$\phi_c P_n$ LRFD
Effective length, KL (ft), with respect to least radius of gyration, r_z	0	37.3	56.1	31.5	47.3	25.7	38.6	19.1	28.7	33.4	50.2
	1	36.1	54.2	30.5	45.8	24.8	37.3	18.5	27.8	32.0	48.1
	2	32.7	49.2	27.6	41.5	22.5	33.8	16.8	25.2	28.1	42.3
	3	27.8	41.7	23.4	35.2	19.1	28.7	14.3	21.5	22.7	34.0
	4	22.1	33.2	18.6	28.0	15.2	22.9	11.4	17.2	16.7	25.2
	5	16.4	24.7	13.9	20.9	11.3	17.1	8.56	12.9	11.4	17.1
	6	11.6	17.4	9.79	14.7	8.02	12.0	6.07	9.12	7.89	11.9
	7	8.53	12.8	7.20	10.8	5.89	8.85	4.46	6.70		
	8	6.53	9.81	5.51	8.28	4.51	6.78	3.41	5.13		
Properties											
A_g, in.^{2}		1.73		1.46		1.19		0.901		1.55	
r_z, in.		0.481		0.481		0.482		0.482		0.419	
ASD		LRFD		[c] Shape is slender for compression with F_y = 36 ksi.							
Ω_c = 1.67		ϕ_c = 0.90		Note: Heavy line indicates KL/r_z equal to or greater than 200.							

Table 4-11 (continued)
Available Strength in Axial Compression, kips
Concentrically Loaded Single Angles

F_y = 36 ksi

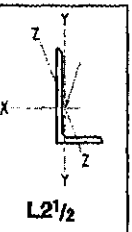

L2½

Shape		L2½×2×						L2½×1½×			
		5/16		1/4		3/16[c]		1/4		3/16[c]	
lb/ft		4.50		3.62		2.75		3.19		2.44	
Design		P_n/Ω_c ASD	$\phi_c P_n$ LRFD	P_n/Ω_c ASD	$\phi_c P_n$ LRFD	P_n/Ω_c ASD	$\phi_c P_n$ LRFD	P_n/Ω_c ASD	$\phi_c P_n$ LRFD	P_n/Ω_c ASD	$\phi_c P_n$ LRFD
Effective length, KL (ft), with respect to least radius of gyration, r_z	0	28.5	42.8	23.1	34.7	17.3	26.1	20.4	30.7	15.3	23.1
	1	27.3	41.0	22.1	33.2	16.6	25.0	19.0	28.5	14.3	21.5
	2	24.0	36.0	19.5	29.3	14.7	22.1	15.2	22.9	11.5	17.4
	3	19.3	29.0	15.8	23.7	12.0	18.0	10.5	15.8	8.10	12.2
	4	14.3	21.5	11.7	17.6	8.99	13.5	6.37	9.57	4.96	7.45
	5	9.72	14.6	7.99	12.0	6.20	9.32	4.07	6.12	3.17	4.77
	6	6.75	10.1	5.55	8.34	4.30	6.47				
	7	4.96	7.46	4.08	6.13	3.16	4.75				

Properties					
A_g, in.^{2}	1.32	1.07	0.818	0.947	0.724
r_z, in.	0.420	0.423	0.426	0.321	0.324

ASD	LRFD
$\Omega_c = 1.67$	$\phi_c = 0.90$

[c] Shape is slender for compression with F_y = 36 ksi.
Note: Heavy line indicates KL/r_z equal to or greater than 200.

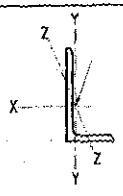

L2

Table 4-11 (continued)
Available Strength in Axial Compression, kips
Concentrically Loaded Single Angles

F_y = 36 ksi

Shape		L2×2×									
		3/8		5/16		1/4		3/16		1/8[c]	
lb/ft		4.70		3.92		3.19		2.44		1.65	
Design		P_n/Ω_c ASD	$\phi_c P_n$ LRFD	P_n/Ω_c ASD	$\phi_c P_n$ LRFD	P_n/Ω_c ASD	$\phi_c P_n$ LRFD	P_n/Ω_c ASD	$\phi_c P_n$ LRFD	P_n/Ω_c ASD	$\phi_c P_n$ LRFD
Effective length, KL (ft), with respect to least radius of gyration, r_z	0	29.5	44.4	25.0	37.6	20.3	30.6	15.6	23.4	9.65	14.5
	1	28.1	42.2	23.8	35.7	19.3	29.1	14.8	22.2	9.23	13.9
	2	24.1	36.2	20.4	30.7	16.6	25.0	12.7	19.1	8.06	12.1
	3	18.7	28.1	15.8	23.8	12.9	19.4	9.92	14.9	6.43	9.66
	4	13.1	19.7	11.1	16.7	9.05	13.6	6.98	10.5	4.68	7.04
	5	8.52	12.8	7.22	10.8	5.90	8.87	4.56	6.86	3.13	4.71
	6	5.92	8.90	5.01	7.53	4.10	6.16	3.17	4.76	2.18	3.27
Properties											
A_g, in.^{2}		1.37		1.16		0.944		0.722		0.491	
r_z, in.		0.386		0.386		0.387		0.389		0.391	
ASD		LRFD		[c] Shape is slender for compression with F_y = 36 ksi.							
Ω_c = 1.67		ϕ_c = 0.90		Note: Heavy line indicates KL/r_z equal to or greater than 200.							

Table 4-12
Available Strength in Axial Compression, kips
Eccentrically Loaded Single Angles

F_y = 36 ksi

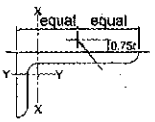

L8

Shape		L8×8×											
		1 1/8		1		7/8		3/4		5/8		9/16[c]	
lb/ft		56.9		51.0		45.0		38.9		32.7		29.6	
Design		P_n/Ω_c ASD	$\phi_c P_n$ LRFD	P_n/Ω_c ASD	$\phi_c P_n$ LRFD	P_n/Ω_c ASD	$\phi_c P_n$ LRFD	P_n/Ω_c ASD	$\phi_c P_n$ LRFD	P_n/Ω_c ASD	$\phi_c P_n$ LRFD	P_n/Ω_c ASD	$\phi_c P_n$ LRFD
Effective length, KL (ft), with respect to least radius of gyration, r_z	0	174	262	167	251	159	240	149	224	127	191	109	165
	1	173	261	166	250	159	239	149	223	127	190	109	164
	2	172	258	165	248	157	237	147	221	126	190	109	164
	3	169	254	162	244	155	233	145	217	125	189	108	163
	4	165	249	158	238	151	227	141	212	124	187	107	161
	5	161	242	154	232	147	221	137	206	123	185	106	159
	6	155	234	148	224	141	213	132	199	121	181	103	154
	7	149	225	142	215	136	205	126	191	115	174	99.4	149
	8	143	216	136	206	129	195	120	182	110	166	96.1	144
	9	136	206	129	196	123	186	114	172	104	157	92.7	139
	10	129	195	122	185	116	176	107	163	97.8	148	89.4	134
	11	122	185	115	175	109	166	101	153	91.7	139	84.6	128
	12	114	174	108	165	102	155	94.2	143	85.6	130	79.0	120
	13	107	163	101	154	95.5	145	87.8	134	79.6	121	73.6	112
	14	100	153	94.6	144	89.0	136	81.6	124	73.9	113	68.3	104
	15	93.7	143	88.1	134	82.7	126	75.6	116	68.4	104	63.2	96.5
	16	87.3	133	81.9	125	76.7	117	70.0	107	63.1	96.5	58.4	89.2
	17	81.1	124	75.9	116	71.0	109	64.6	98.8	58.1	88.9	53.8	82.3
	18	75.1	115	70.1	107	65.5	100	59.4	90.9	53.4	81.6	49.5	75.7
	19	69.6	106	64.9	99.3	60.5	92.5	54.7	83.7	49.0	75.0	45.4	69.4
	20	64.7	99.0	60.2	92.1	56.0	85.6	50.5	77.3	45.2	69.1	41.8	63.9
	21	60.3	92.2	56.0	85.7	52.0	79.5	46.8	71.6	41.8	63.9	38.6	59.0
	22	56.3	86.1	52.2	79.9	48.4	74.0	43.5	66.5	38.7	59.2	35.7	54.7
	23	52.6	80.5	48.8	74.6	45.1	69.0	40.5	62.0	36.0	55.0	33.2	50.7
	24	49.3	75.5	45.7	69.9	42.2	64.5	37.8	57.8	33.5	51.3	30.9	47.2
	25	46.3	70.9	42.8	65.5	39.5	60.4	35.4	54.1	31.3	47.9	28.8	44.1
	26					37.1	56.7	33.1	50.7	29.3	44.8	27.0	41.2

Properties						
A_g, in.^{2}	16.8	15.1	13.3	11.5	9.69	8.77
r_z, in.	1.56	1.56	1.57	1.57	1.58	1.58

ASD	LRFD
Ω_c = 1.67	ϕ_c = 0.90

[c] Shape is slender for compression with F_y = 36 ksi.
Note: Heavy line indicates KL/r_z equal to or greater than 200.

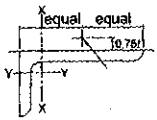

L8

Table 4-12 (continued)
Available Strength in Axial Compression, kips
Eccentrically Loaded Single Angles

F_y = 36 ksi

Shape		L8×8×		L8×6×									
		1/2[c,f]		1		7/8		3/4		5/8		9/16[c]	
lb/ft		26.4		44.2		39.1		33.8		28.5		25.7	
Design		P_n/Ω_c ASD	$\phi_c P_n$ LRFD	P_n/Ω_c ASD	$\phi_c P_n$ LRFD	P_n/Ω_c ASD	$\phi_c P_n$ LRFD	P_n/Ω_c ASD	$\phi_c P_n$ LRFD	P_n/Ω_c ASD	$\phi_c P_n$ LRFD	P_n/Ω_c ASD	$\phi_c P_n$ LRFD
Effective length, KL (ft), with respect to least radius of gyration, r_z	0	91.0	137	161	241	158	238	157	236	153	231	155	233
	1	90.8	137	160	240	158	237	156	235	152	229	153	230
	2	90.4	136	158	238	155	234	154	231	148	224	148	223
	3	89.8	135	155	234	152	229	150	226	142	215	141	213
	4	89.0	134	151	228	147	223	144	218	135	204	133	201
	5	87.9	132	146	221	138	209	136	206	126	192	124	189
	6	85.6	129	135	205	128	194	125	190	118	181	115	175
	7	82.7	124	124	189	118	180	115	175	108	165	104	159
	8	79.8	120	114	174	108	165	104	159	97.1	149	93.4	143
	9	76.8	115	105	160	98.3	151	94.2	144	87.1	134	83.6	129
	10	73.8	111	95.5	146	89.3	137	85.0	131	78.0	120	74.7	115
	11	70.9	106	87.0	134	81.0	124	76.7	118	69.8	108	66.7	103
	12	67.9	101	79.1	122	73.3	113	69.1	106	62.6	96.7	59.7	92.3
	13	64.9	96.6	71.8	110	66.3	102	62.2	96.0	56.1	86.7	53.4	82.7
	14	62.0	91.9	65.1	100	60.0	92.4	56.0	86.5	50.3	77.8	47.9	74.2
	15	58.2	87.2	58.9	90.7	54.1	83.4	50.4	77.8	45.0	69.7	42.9	66.5
	16	53.9	82.3	53.6	82.5	49.0	75.6	45.5	70.3	40.5	62.7	38.5	59.7
	17	49.7	76.0	48.9	75.2	44.6	68.8	41.3	63.8	36.7	56.7	34.8	53.9
	18	45.6	70.1	44.8	68.9	40.8	62.9	37.7	58.2	33.4	51.6	31.6	48.9
	19	42.1	64.4	41.2	63.4	37.4	57.7	34.5	53.2	30.5	47.1	28.8	44.6
	20	38.7	59.2	38.0	58.5	34.5	53.1	31.7	48.9	27.9	43.2	26.4	40.8
	21	35.7	54.6	35.1	54.1	31.9	49.1	29.2	45.1	25.7	39.7	24.3	37.5
	22	33.0	50.5										
	23	30.6	46.8										
	24	28.5	43.6										
	25	26.6	40.6										
	26	24.8	37.9										
Properties													
A_g, in.^{2}		7.84		13.1		11.5		9.99		8.41		7.61	
r_z, in.		1.59		1.28		1.28		1.29		1.29		1.30	
ASD		LRFD		[c] Shape is slender for compression with F_y = 36 ksi.									
Ω_c = 1.67		ϕ_c = 0.90		[f] Shape exceeds compact limit for flexure with F_y = 36 ksi.									
				Note: Heavy line indicates KL/r_z equal to or greater than 200.									

Table 4-12 (continued)

Available Strength in Axial Compression, kips

F_y = 36 ksi

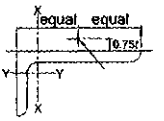

Eccentrically Loaded Single Angles

L8

Shape		L8×6×				L8×4×							
		1/2[c,f]		7/16[c,f]		1		7/8		3/4		5/8	
lb/ft		23.0		20.2		37.4		33.1		28.7		24.2	
Design		P_n/Ω_c ASD	$\phi_c P_n$ LRFD	P_n/Ω_c ASD	$\phi_c P_n$ LRFD	P_n/Ω_c ASD	$\phi_c P_n$ LRFD	P_n/Ω_c ASD	$\phi_c P_n$ LRFD	P_n/Ω_c ASD	$\phi_c P_n$ LRFD	P_n/Ω_c ASD	$\phi_c P_n$ LRFD
Effective length, KL (ft), with respect to least radius of gyration, r_z	0	122	184	89.5	134	68.2	102	65.8	98.8	63.6	95.6	61.8	93.0
	1	122	183	89.5	134	67.6	102	65.1	97.9	63.0	94.7	61.2	92.0
	2	121	182	89.2	134	65.8	99.0	63.3	95.2	61.3	92.2	59.3	89.3
	3	121	181	88.1	132	63.0	94.9	60.4	91.1	58.5	88.2	56.3	84.9
	4	121	180	86.9	130	59.4	89.7	57.0	86.1	54.8	82.9	52.4	79.3
	5	119	181	86.0	128	55.5	84.0	53.0	80.3	50.7	76.9	48.1	73.0
	6	108	165	85.8	127	51.2	77.7	48.7	73.9	46.3	70.4	43.6	66.3
	7	97.6	149	88.1	128	46.9	71.3	44.3	67.5	41.9	63.8	39.1	59.7
	8	87.5	134	82.8	127	42.5	64.8	40.0	61.0	37.6	57.4	34.9	53.3
	9	78.1	120	73.7	114	38.3	58.4	35.9	54.8	33.5	51.2	30.9	47.3
	10	69.6	107	65.5	101	34.2	52.2	31.9	48.8	29.6	45.4	27.2	41.6
	11	62.1	96.0	58.3	90.3	30.6	46.8	28.4	43.5	26.3	40.3	24.0	36.8
	12	55.4	85.8	51.9	80.6	27.5	42.1	25.5	39.0	23.5	36.0	21.3	32.7
	13	49.5	76.8	46.4	72.1	24.9	38.0	22.9	35.1	21.1	32.3	19.0	29.2
	14	44.3	68.8	41.5	64.5	22.5	34.5	20.7	31.8	19.0	29.1	17.1	26.2
	15	39.8	61.7	37.2	57.9								
	16	35.6	55.3	33.4	51.9								
	17	32.1	49.9	30.0	46.7								
	18	29.1	45.2	27.2	42.2								
	19	26.5	41.1	24.7	38.4								
	20	24.3	37.6	22.6	35.0								
	21	22.3	34.5	20.7	32.1								
Properties													
A_g, in.^{2}		6.80		5.99		11.1		9.79		8.49		7.16	
r_z, in.		1.30		1.31		0.844		0.846		0.850		0.856	

ASD: Ω_c = 1.67 LRFD: ϕ_c = 0.90

[c] Shape is slender for compression with F_y = 36 ksi.
[f] Shape exceeds compact limit for flexure with F_y = 36 ksi.
Note: Heavy line indicates KL/r_z equal to or greater than 200.

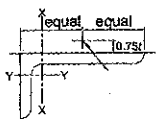

Table 4-12 (continued)
Available Strength in Axial Compression, kips

F_y = 36 ksi

L8-L7 Eccentrically Loaded Single Angles

Shape		L8×4×						L7×4×					
		9/16[c]		1/2[e,f]		7/16[e,f]		3/4		5/8		1/2[c]	
lb/ft		21.9		19.6		17.2		26.2		22.1		17.9	
Design		P_n/Ω_c ASD	$\phi_c P_n$ LRFD	P_n/Ω_c ASD	$\phi_c P_n$ LRFD	P_n/Ω_c ASD	$\phi_c P_n$ LRFD	P_n/Ω_c ASD	$\phi_c P_n$ LRFD	P_n/Ω_c ASD	$\phi_c P_n$ LRFD	P_n/Ω_c ASD	$\phi_c P_n$ LRFD
Effective length, KL (ft), with respect to least radius of gyration, r_z	0	60.0	90.2	57.5	86.4	54.7	82.2	65.2	98.0	62.1	93.4	59.2	89.0
	1	59.3	89.2	56.8	85.4	54.1	81.3	64.4	96.9	61.4	92.4	58.5	87.9
	2	57.4	86.4	54.9	82.6	52.1	78.5	62.2	93.6	59.4	89.5	56.3	84.8
	3	54.4	82.0	51.9	78.3	49.2	74.3	58.8	88.7	56.2	84.8	52.8	79.8
	4	50.5	76.4	48.1	72.8	45.5	68.9	54.9	83.0	52.1	78.8	48.6	73.6
	5	46.2	70.1	43.9	66.6	41.4	62.8	50.4	76.5	47.5	72.1	43.8	66.7
	6	41.7	63.6	39.5	60.2	37.2	56.6	45.8	69.6	42.7	65.1	39.1	59.7
	7	37.4	57.0	35.3	53.9	33.1	50.6	41.1	62.7	38.1	58.2	34.6	52.9
	8	33.2	50.8	31.3	47.9	29.3	44.9	36.7	56.1	33.8	51.7	30.4	46.6
	9	29.4	45.0	27.6	42.4	25.8	39.6	32.6	49.8	29.7	45.6	26.6	40.9
	10	25.8	39.6	24.3	37.3	22.7	34.9	28.7	43.9	26.0	39.9	23.2	35.6
	11	22.7	34.8	21.3	32.7	19.9	30.5	25.3	38.8	22.9	35.1	20.2	31.1
	12	20.1	30.8	18.8	28.9	17.5	26.9	22.5	34.5	20.2	31.1	17.8	27.4
	13	17.9	27.5	16.7	25.7	15.5	23.8	20.1	30.9	18.0	27.7	15.8	24.2
	14	16.1	24.7	14.9	23.0	13.8	21.3	18.1	27.8	16.2	24.8	14.1	21.6
Properties													
A_g, in.^{2}		6.49		5.80		5.11		7.74		6.50		5.26	
r_z, in.		0.859		0.863		0.867		0.855		0.860		0.866	

ASD: Ω_c = 1.67 LRFD: ϕ_c = 0.90

[c] Shape is slender for compression with F_y = 36 ksi.
[f] Shape exceeds compact limit for flexure with F_y = 36 ksi.
Note: Heavy line indicates KL/r_z equal to or greater than 200.

Table 4-12 (continued)

Available Strength in Axial Compression, kips

F_y = 36 ksi

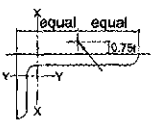

Eccentrically Loaded Single Angles

L7-L6

Shape		L7×4×				L6×6×							
		7/16[c,f]		3/8[c,f]		1		7/8		3/4		5/8	
lb/ft		15.7		13.6		37.4		33.1		28.7		24.2	
Design		P_n/Ω_c ASD	$\phi_c P_n$ LRFD	P_n/Ω_c ASD	$\phi_c P_n$ LRFD	P_n/Ω_c ASD	$\phi_c P_n$ LRFD	P_n/Ω_c ASD	$\phi_c P_n$ LRFD	P_n/Ω_c ASD	$\phi_c P_n$ LRFD	P_n/Ω_c ASD	$\phi_c P_n$ LRFD
Effective length, KL (ft), with respect to least radius of gyration, r_z	0	56.3	84.6	53.1	79.9	102	153	98.9	149	93.5	141	87.3	131
	1	55.6	83.6	52.4	78.8	101	152	98.3	148	92.9	140	86.7	130
	2	53.4	80.4	50.3	75.7	99.5	150	96.7	145	91.3	137	85.1	128
	3	50.0	75.6	47.0	71.0	96.9	146	94.0	141	88.6	133	82.5	124
	4	45.8	69.4	42.9	65.0	93.4	141	90.4	136	85.1	128	79.1	119
	5	41.2	62.7	38.4	58.5	89.1	135	86.1	130	80.9	122	75.0	113
	6	36.6	55.9	34.0	52.0	84.4	128	81.3	123	76.2	115	70.4	106
	7	32.3	49.4	29.9	45.8	79.3	120	76.1	115	71.1	108	65.5	99.2
	8	28.3	43.4	26.1	40.2	73.9	112	70.7	107	65.9	100	60.4	91.8
	9	24.7	38.0	22.8	35.1	68.5	104	65.3	99.3	60.6	92.2	55.4	84.3
	10	21.5	33.2	19.8	30.6	63.2	96.3	60.0	91.4	55.5	84.6	50.5	77.0
	11	18.7	28.8	17.2	26.6	58.0	88.5	54.9	83.7	50.6	77.2	45.8	69.9
	12	16.4	25.3	15.1	23.2	53.1	81.0	50.0	76.3	45.9	70.1	41.4	63.2
	13	14.5	22.3	13.3	20.5	48.3	73.8	45.3	69.3	41.4	63.4	37.2	56.9
	14	12.9	19.9	11.8	18.1	43.8	66.9	40.9	62.6	37.3	57.1	33.4	51.0
	15					39.8	60.9	37.1	56.8	33.7	51.6	30.1	46.0
	16					36.4	55.7	33.8	51.7	30.6	46.9	27.2	41.6
	17					33.4	51.0	30.9	47.3	27.9	42.8	24.7	37.8
	18					30.7	46.9	28.4	43.4	25.6	39.1	22.6	34.5
	19					28.3	43.3	26.1	39.9	23.5	36.0	20.7	31.7
Properties													
A_g, in.^{2}		4.63		4.00		11.0		9.75		8.46		7.13	
r_z, in.		0.869		0.873		1.17		1.17		1.17		1.17	
ASD		LRFD											
Ω_c = 1.67		ϕ_c = 0.90											

[c] Shape is slender for compression with F_y = 36 ksi.
[f] Shape exceeds compact limit for flexure with F_y = 36 ksi.
Note: Heavy line indicates KL/r_z equal to or greater than 200.

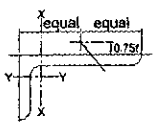

Table 4-12 (continued)
Available Strength in Axial Compression, kips

F_y = 36 ksi

L6

Eccentrically Loaded Single Angles

Shape		L6×6×										L6×4×	
		9/16		1/2		7/16[c]		3/8[c,f]		5/16[c,f]		7/8	
lb/ft		21.9		19.6		17.2		14.9		12.4		27.2	
Design		P_n/Ω_c ASD	$\phi_c P_n$ LRFD	P_n/Ω_c ASD	$\phi_c P_n$ LRFD	P_n/Ω_c ASD	$\phi_c P_n$ LRFD	P_n/Ω_c ASD	$\phi_c P_n$ LRFD	P_n/Ω_c ASD	$\phi_c P_n$ LRFD	P_n/Ω_c ASD	$\phi_c P_n$ LRFD
Effective length, KL (ft), with respect to least radius of gyration, r_z	0	83.3	125	77.6	117	64.8	97.4	50.7	76.2	36.0	54.0	71.9	108
	1	82.8	124	77.4	116	64.6	97.1	50.6	76.0	35.9	53.9	71.0	107
	2	81.3	122	76.9	116	64.2	96.5	50.2	75.4	35.6	53.5	68.3	103
	3	78.8	119	74.8	113	63.5	95.3	49.6	74.5	35.2	52.9	64.2	96.9
	4	75.5	114	71.6	108	62.5	93.8	48.7	73.2	34.6	52.0	59.3	89.7
	5	71.6	108	67.8	102	59.9	89.8	46.6	70.0	33.9	50.9	53.9	81.8
	6	67.2	102	63.5	96.1	57.3	85.8	44.4	66.7	33.0	49.5	48.5	73.9
	7	62.4	94.6	58.9	89.3	53.7	81.3	42.2	63.3	31.8	47.7	43.5	66.3
	8	57.6	87.4	54.2	82.4	49.4	75.0	40.0	59.9	30.0	45.1	38.7	59.1
	9	52.7	80.2	49.6	75.4	45.1	68.6	37.8	56.4	28.3	42.4	34.2	52.4
	10	48.0	73.2	45.0	68.6	40.9	62.4	35.5	52.9	26.5	39.7	30.0	46.1
	11	43.5	66.4	40.7	62.1	37.0	56.4	33.3	49.3	24.7	37.0	26.5	40.6
	12	39.2	60.0	36.6	55.9	33.2	50.8	30.2	45.7	23.0	34.3	23.5	36.1
	13	35.3	53.9	32.8	50.2	29.8	45.6	27.1	41.5	21.2	31.5	21.0	32.2
	14	31.6	48.3	29.3	44.8	26.6	40.6	24.2	37.1	19.4	28.7	18.9	28.9
	15	28.4	43.4	26.3	40.2	23.8	36.4	21.7	33.1	17.5	25.9		
	16	25.6	39.2	23.7	36.2	21.4	32.8	19.4	29.7	15.7	23.3		
	17	23.3	35.6	21.5	32.8	19.4	29.6	17.6	26.8	14.2	21.1		
	18	21.2	32.5	19.5	29.9	17.6	26.9	15.9	24.3	12.9	19.1		
	19	19.4	29.7	17.9	27.3	16.1	24.6	14.5	22.2	11.7	17.4		
Properties													
A_g, in.^{2}		6.45		5.77		5.08		4.38		3.67		8.00	
r_z, in.		1.18		1.18		1.18		1.19		1.19		0.854	
ASD	LRFD												
Ω_c = 1.67	ϕ_c = 0.90												

[c] Shape is slender for compression with F_y = 36 ksi.
[f] Shape exceeds compact limit for flexure with F_y = 36 ksi.
Note: Heavy line indicates KL/r_z equal to or greater than 200.

Table 4-12 (continued)

Available Strength in Axial Compression, kips

Eccentrically Loaded Single Angles

F_y = 36 ksi

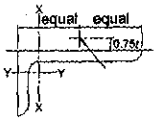

L6

Shape		L6×4×									
		3/4		5/8		9/16		1/2		7/16[c]	
lb/ft		23.6		20.0		18.1		16.2		14.3	
Design		P_n/Ω_c ASD	$\phi_c P_n$ LRFD	P_n/Ω_c ASD	$\phi_c P_n$ LRFD	P_n/Ω_c ASD	$\phi_c P_n$ LRFD	P_n/Ω_c ASD	$\phi_c P_n$ LRFD	P_n/Ω_c ASD	$\phi_c P_n$ LRFD
Effective length, KL (ft), with respect to least radius of gyration, r_z	0	70.1	105	67.4	101	66.2	99.5	64.0	96.2	62.4	93.7
	1	69.1	104	66.3	99.7	65.1	97.9	63.1	95.0	61.4	92.4
	2	66.2	99.8	63.2	95.3	61.9	93.2	60.5	91.1	58.6	88.4
	3	61.9	93.5	58.7	88.7	57.8	87.3	56.2	85.0	54.2	82.0
	4	56.7	85.9	53.8	81.6	52.7	79.9	50.9	77.3	48.8	74.1
	5	51.4	78.0	48.5	73.7	47.1	71.7	45.3	69.0	43.1	65.7
	6	46.1	70.2	43.1	65.8	41.6	63.6	39.7	60.7	37.6	57.5
	7	41.0	62.6	38.0	58.1	36.5	55.9	34.6	53.1	32.5	50.0
	8	36.2	55.4	33.3	51.0	31.8	48.8	30.0	46.1	28.1	43.2
	9	31.8	48.8	29.0	44.6	27.6	42.5	26.0	39.9	24.2	37.3
	10	27.8	42.6	25.2	38.8	23.9	36.8	22.4	34.4	20.8	32.1
	11	24.4	37.4	22.0	33.8	20.8	32.0	19.4	29.9	17.9	27.7
	12	21.5	33.1	19.4	29.8	18.2	28.0	17.0	26.1	15.6	24.1
	13	19.2	29.4	17.1	26.4	16.1	24.8	15.0	23.0	13.8	21.2
	14	17.2	26.4	15.3	23.5	14.3	22.1	13.3	20.5	12.2	18.8
Properties											
A_g, in.^{2}		6.94		5.86		5.31		4.75		4.18	
r_z, in.		0.856		0.859		0.861		0.864		0.867	
ASD		LRFD									
Ω_c = 1.67		ϕ_c = 0.90									

[c] Shape is slender for compression with F_y = 36 ksi.
Note: Heavy line indicates KL/r_z equal to or greater than 200.

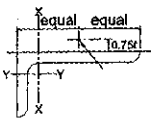

Table 4-12 (continued)
Available Strength in Axial Compression, kips

F_y = 36 ksi

L6

Eccentrically Loaded Single Angles

Shape		L6×4×				L6×3½×					
		3/8 [c,f]		5/16 [c,f]		1/2		3/8 [c,f]		5/16 [c,f]	
lb/ft		12.3		10.3		15.3		11.7		9.80	
Design		P_n/Ω_c	$\phi_c P_n$	P_n/Ω_c	$\phi_c P_n$	P_n/Ω_c	$\phi_c P_n$	P_n/Ω_c	$\phi_c P_n$	P_n/Ω_c	$\phi_c P_n$
		ASD	LRFD	ASD	LRFD	ASD	LRFD	ASD	LRFD	ASD	LRFD
Effective length, KL (ft), with respect to least radius of gyration, r_z	0	58.9	88.5	53.3	80.2	47.1	70.8	43.6	65.6	40.4	60.7
	1	57.9	87.1	53.3	80.1	46.4	69.8	42.9	64.5	39.6	59.6
	2	55.2	83.2	51.0	77.0	44.3	66.7	40.6	61.3	37.5	56.5
	3	50.9	77.0	47.0	71.1	41.0	61.9	37.3	56.4	34.3	51.9
	4	45.6	69.3	42.0	63.8	37.0	56.1	33.2	50.5	30.5	46.3
	5	40.1	61.2	36.7	56.1	32.7	49.8	29.1	44.4	26.6	40.6
	6	34.8	53.3	31.7	48.7	28.6	43.7	25.2	38.5	22.9	35.1
	7	30.0	46.1	27.2	41.9	24.8	37.9	21.6	33.2	19.6	30.1
	8	25.8	39.8	23.3	36.0	21.3	32.7	18.5	28.4	16.7	25.7
	9	22.2	34.2	20.0	31.0	18.2	28.0	15.7	24.2	14.2	22.0
	10	19.0	29.4	17.2	26.6	15.7	24.1	13.4	20.7	12.1	18.7
	11	16.4	25.3	14.8	22.9	13.7	21.0	11.6	17.8	10.4	16.1
	12	14.2	22.0	12.8	19.8	12.0	18.4	10.1	15.6	9.03	13.9
	13	12.5	19.3	11.2	17.3						
	14	11.0	17.0	9.83	15.2						

Properties					
A_g, in.^{2}	3.61	3.03	4.50	3.44	2.89
r_z, in.	0.870	0.874	0.756	0.763	0.767

ASD	LRFD
Ω_c = 1.67	ϕ_c = 0.90

[c] Shape is slender for compression with F_y = 36 ksi.
[f] Shape exceeds compact limit for flexure with F_y = 36 ksi.
Note: Heavy line indicates KL/r_z equal to or greater than 200.

$F_y = 36$ ksi

Table 4-12 (continued)
Available Strength in Axial Compression, kips
Eccentrically Loaded Single Angles

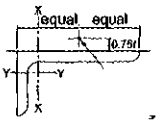

L5

Shape		L5×5×											
		7/8		3/4		5/8		1/2		7/16		3/8[c]	
lb/ft		27.2		23.6		20.0		16.2		14.3		12.3	
Design		P_n/Ω_c ASD	$\phi_c P_n$ LRFD	P_n/Ω_c ASD	$\phi_c P_n$ LRFD	P_n/Ω_c ASD	$\phi_c P_n$ LRFD	P_n/Ω_c ASD	$\phi_c P_n$ LRFD	P_n/Ω_c ASD	$\phi_c P_n$ LRFD	P_n/Ω_c ASD	$\phi_c P_n$ LRFD
Effective length, KL (ft), with respect to least radius of gyration, r_z	0	71.6	108	68.9	104	65.7	98.7	60.6	91.0	56.6	85.1	46.5	69.8
	1	71.1	107	68.4	103	65.1	97.9	60.0	90.2	56.1	84.3	46.3	69.6
	2	69.4	104	66.7	100	63.4	95.5	58.4	87.9	54.6	82.2	45.8	68.9
	3	66.9	101	64.1	96.6	60.8	91.6	55.9	84.2	52.2	78.7	45.1	67.7
	4	63.5	95.8	60.7	91.6	57.4	86.7	52.6	79.5	49.1	74.1	43.4	65.1
	5	59.5	90.0	56.7	85.8	53.4	80.8	48.8	73.9	45.5	68.8	41.2	61.7
	6	55.2	83.7	52.4	79.4	49.1	74.5	44.7	67.8	41.6	63.0	38.3	58.1
	7	50.7	77.0	47.9	72.8	44.7	67.9	40.5	61.5	37.6	57.1	34.6	52.5
	8	46.2	70.3	43.5	66.2	40.3	61.4	36.3	55.3	33.6	51.2	30.9	47.0
	9	41.8	63.8	39.1	59.7	36.1	55.1	32.3	49.3	29.8	45.6	27.4	41.7
	10	37.6	57.4	35.0	53.5	32.1	49.1	28.6	43.7	26.3	40.3	24.1	36.8
	11	33.6	51.3	31.1	47.6	28.4	43.4	25.1	38.5	23.1	35.3	21.1	32.2
	12	29.9	45.8	27.6	42.2	25.1	38.4	22.1	33.7	20.2	30.9	18.4	28.1
	13	26.8	41.0	24.7	37.7	22.3	34.1	19.5	29.8	17.8	27.3	16.1	24.7
	14	24.2	36.9	22.1	33.9	19.9	30.5	17.3	26.5	15.8	24.2	14.3	21.9
	15	21.9	33.4	20.0	30.5	17.9	27.4	15.5	23.8	14.1	21.6	12.7	19.5
	16	19.9	30.4	18.1	27.7	16.2	24.7	14.0	21.4	12.7	19.4	11.4	17.5
Properties													
A_g, in.^{2}		8.00		6.98		5.90		4.79		4.22		3.65	
r_z, in.		0.971		0.972		0.975		0.980		0.983		0.986	
ASD		LRFD		[c] Shape is slender for compression with $F_y = 36$ ksi.									
$\Omega_c = 1.67$		$\phi_c = 0.90$		Note: Heavy line indicates KL/r_z equal to or greater than 200.									

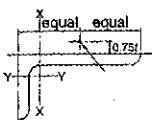

Table 4-12 (continued)
Available Strength in Axial Compression, kips

F_y = 36 ksi

L5 Eccentrically Loaded Single Angles

Shape		L5×5×		L5×3½×									
		5/16[c,f]		3/4		5/8		1/2		3/8[c]		5/16[c,f]	
lb/ft		10.3		19.8		16.8		13.6		10.4		8.70	
Design		P_n/Ω_c ASD	$\phi_c P_n$ LRFD	P_n/Ω_c ASD	$\phi_c P_n$ LRFD	P_n/Ω_c ASD	$\phi_c P_n$ LRFD	P_n/Ω_c ASD	$\phi_c P_n$ LRFD	P_n/Ω_c ASD	$\phi_c P_n$ LRFD	P_n/Ω_c ASD	$\phi_c P_n$ LRFD
Effective length, KL (ft), with respect to least radius of gyration, r_z	0	35.4	53.2	55.4	83.3	54.6	82.0	52.9	79.5	49.7	74.7	46.9	70.5
	1	35.2	53.0	54.9	82.6	54.0	81.3	51.6	77.7	48.7	73.2	45.9	69.1
	2	34.9	52.4	53.4	80.5	51.3	77.3	48.1	72.6	45.6	68.8	42.8	64.7
	3	34.3	51.5	49.0	74.1	46.6	70.5	43.6	66.1	40.9	62.0	38.2	57.9
	4	32.8	49.3	43.9	66.6	41.3	62.7	38.6	58.7	35.4	54.0	32.8	50.1
	5	31.0	46.5	38.7	59.0	36.3	55.4	33.5	51.1	30.1	46.1	27.7	42.4
	6	29.1	43.7	33.9	51.8	31.5	48.2	28.7	43.9	25.3	38.9	23.1	35.6
	7	27.3	40.8	29.5	45.1	27.1	41.6	24.4	37.5	21.2	32.7	19.2	29.7
	8	25.4	37.8	25.4	39.0	23.2	35.7	20.7	31.8	17.6	27.5	16.1	24.9
	9	23.5	34.9	21.8	33.5	19.8	30.4	17.5	26.9	14.9	23.0	13.4	20.8
	10	21.1	31.8	18.9	29.0	17.0	26.1	14.9	23.0	12.6	19.4	11.3	17.5
	11	18.5	28.3	16.5	25.3	14.8	22.7	12.9	19.8	10.8	16.6	9.62	14.9
	12	16.2	24.7	14.5	22.3	12.9	19.9	11.2	17.3	9.34	14.4	8.30	12.8
	13	14.2	21.7										
	14	12.5	19.1										
	15	11.1	17.0										
	16	9.96	15.2										
Properties													
A_g, in.^{2}		3.07		5.85		4.93		4.00		3.05		2.56	
r_z, in.		0.990		0.744		0.746		0.750		0.755		0.758	
ASD		LRFD		[c] Shape is slender for compression with F_y = 36 ksi.									
Ω_c = 1.67		ϕ_c = 0.90		[f] Shape exceeds compact limit for flexure with F_y = 36 ksi. Note: Heavy line indicates KL/r_z equal to or greater than 200.									

Table 4-12 (continued)

F_y = 36 ksi

Available Strength in Axial Compression, kips

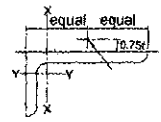

Eccentrically Loaded Single Angles

L5

Shape		L5×3½×		L5×3×									
		¼[c,f]		½		7/16		⅜[c]		5/16[c,f]		¼[c,f]	
lb/ft		7.00		12.8		11.3		9.80		8.20		6.60	
Design		P_n/Ω_c ASD	$\phi_c P_n$ LRFD	P_n/Ω_c ASD	$\phi_c P_n$ LRFD	P_n/Ω_c ASD	$\phi_c P_n$ LRFD	P_n/Ω_c ASD	$\phi_c P_n$ LRFD	P_n/Ω_c ASD	$\phi_c P_n$ LRFD	P_n/Ω_c ASD	$\phi_c P_n$ LRFD
Effective length, KL (ft), with respect to least radius of gyration, r_z	0	31.0	46.5	35.9	54.0	34.7	52.2	33.8	50.7	31.8	47.7	28.8	43.3
	1	31.0	46.6	35.0	52.7	34.0	51.1	33.0	49.6	31.0	46.6	28.1	42.2
	2	30.9	46.3	32.8	49.5	31.9	48.1	30.7	46.3	28.7	43.3	25.9	39.2
	3	30.6	45.8	29.7	45.0	28.7	43.5	27.4	41.5	25.4	38.6	22.9	34.7
	4	29.2	44.6	26.2	39.8	25.0	38.1	23.7	36.1	21.8	33.3	19.5	29.8
	5	24.5	37.6	22.6	34.5	21.4	32.7	20.1	30.7	18.4	28.1	16.3	25.0
	6	20.3	31.4	19.3	29.5	18.1	27.7	16.8	25.8	15.3	23.5	13.5	20.8
	7	16.9	26.1	16.2	24.9	15.2	23.3	14.0	21.5	12.7	19.5	11.2	17.2
	8	14.0	21.8	13.6	20.9	12.6	19.4	11.6	17.8	10.5	16.1	9.22	14.3
	9	11.7	18.2	11.5	17.7	10.7	16.4	9.72	15.0	8.74	13.5	7.63	11.8
	10	9.85	15.3	9.90	15.2	9.12	14.0	8.28	12.7	7.40	11.4	6.43	9.93
	11	8.36	13.0										
	12	7.18	11.1										
Properties													
A_g, in.^{2}		2.07		3.75		3.31		2.86		2.41		1.94	
r_z, in.		0.761		0.642		0.644		0.646		0.649		0.652	
ASD		LRFD		[c] Shape is slender for compression with F_y = 36 ksi.									
Ω_c = 1.67		ϕ_c = 0.90		[f] Shape exceeds compact limit for flexure with F_y = 36 ksi.									
				Note: Heavy line indicates KL/r_z equal to or greater than 200.									

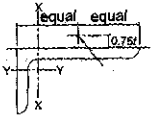

Table 4-12 (continued)
Available Strength in Axial Compression, kips

F_y = 36 ksi

L4 **Eccentrically Loaded Single Angles**

Shape		L4×4×											
		3/4		5/8		1/2		7/16		3/8		5/16	
lb/ft		18.5		15.7		12.8		11.3		9.80		8.20	
Design		P_n/Ω_c ASD	$\phi_c P_n$ LRFD	P_n/Ω_c ASD	$\phi_c P_n$ LRFD	P_n/Ω_c ASD	$\phi_c P_n$ LRFD	P_n/Ω_c ASD	$\phi_c P_n$ LRFD	P_n/Ω_c ASD	$\phi_c P_n$ LRFD	P_n/Ω_c ASD	$\phi_c P_n$ LRFD
Effective length, KL (ft), with respect to least radius of gyration, r_z	0	45.8	68.9	44.5	66.9	41.2	62.0	39.6	59.5	36.9	55.4	31.9	48.0
	1	45.3	68.1	43.9	66.0	40.7	61.2	39.0	58.7	36.3	54.7	31.8	47.7
	2	43.7	65.9	42.3	63.7	39.1	58.8	37.4	56.3	34.8	52.4	31.3	47.0
	3	41.3	62.4	39.8	60.0	36.6	55.2	35.0	52.8	32.5	49.0	29.3	44.2
	4	38.3	57.9	36.6	55.4	33.5	50.7	31.9	48.3	29.6	44.8	26.6	40.3
	5	34.9	52.9	33.1	50.3	30.1	45.7	28.6	43.3	26.4	40.1	23.7	35.9
	6	31.4	47.7	29.5	44.9	26.7	40.6	25.1	38.3	23.2	35.2	20.7	31.5
	7	27.9	42.4	26.0	39.6	23.3	35.5	21.9	33.3	20.0	30.6	17.8	27.2
	8	24.5	37.4	22.7	34.6	20.1	30.8	18.8	28.7	17.2	26.2	15.2	23.3
	9	21.3	32.5	19.6	29.9	17.2	26.4	16.0	24.5	14.5	22.3	12.8	19.6
	10	18.6	28.4	16.9	25.8	14.8	22.6	13.7	20.9	12.4	18.9	10.9	16.6
	11	16.3	24.9	14.7	22.6	12.8	19.6	11.8	18.1	10.7	16.3	9.33	14.3
	12	14.4	22.0	13.0	19.8	11.2	17.2	10.3	15.7	9.26	14.2	8.08	12.4
	13											7.06	10.8

Properties						
A_g, in.^{2}	5.44	4.61	3.75	3.30	2.86	2.40
r_z, in.	0.774	0.774	0.776	0.777	0.779	0.781

ASD	LRFD
Ω_c = 1.67	ϕ_c = 0.90

Note: Heavy line indicates KL/r_z equal to or greater than 200.

Table 4-12 (continued)

Available Strength in Axial Compression, kips

F_y = 36 ksi

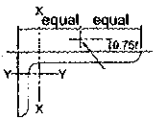

Eccentrically Loaded Single Angles

L4

Shape		L4×4×		L4×3½×								L4×3×	
		1/4[c,†]		1/2		3/8		5/16		1/4[c,†]		5/8	
lb/ft		6.60		11.9		9.10		7.70		6.20		13.6	
Design		P_n/Ω_c ASD	$\phi_c P_n$ LRFD	P_n/Ω_c ASD	$\phi_c P_n$ LRFD	P_n/Ω_c ASD	$\phi_c P_n$ LRFD	P_n/Ω_c ASD	$\phi_c P_n$ LRFD	P_n/Ω_c ASD	$\phi_c P_n$ LRFD	P_n/Ω_c ASD	$\phi_c P_n$ LRFD
Effective length, KL (ft), with respect to least radius of gyration, r_z	0	22.5	33.8	50.4	75.7	47.8	71.9	35.7	53.6	24.5	36.8	39.1	58.8
	1	22.3	33.6	49.7	74.8	48.0	72.1	35.6	53.5	24.4	36.7	38.6	58.1
	2	22.0	33.0	47.7	72.0	48.1	72.9	35.4	53.0	23.6	35.4	37.2	56.2
	3	21.2	31.8	44.6	67.8	43.3	66.1	34.3	51.0	22.3	33.4	34.4	52.2
	4	19.7	29.6	40.7	62.3	37.7	57.9	35.1	51.0	21.1	31.5	29.5	45.0
	5	18.2	27.3	35.0	53.7	32.2	49.7	29.7	46.1	20.4	29.8	25.0	38.2
	6	16.8	25.0	28.7	44.3	25.8	39.9	23.9	37.2	21.1	32.9	21.0	32.2
	7	15.2	22.7	23.6	36.5	20.7	32.2	19.0	29.6	16.6	26.0	17.5	26.9
	8	13.0	19.9	19.4	30.0	16.8	26.1	15.3	23.8	13.3	20.8	14.6	22.4
	9	11.0	16.9	16.1	24.8	13.7	21.3	12.4	19.3	10.8	16.8	12.3	18.9
	10	9.29	14.2	13.5	20.9	11.4	17.7	10.3	15.9	8.86	13.8	10.5	16.1
	11	7.93	12.1	11.5	17.8	9.68	15.0	8.64	13.4	7.44	11.6		
	12	6.84	10.5					7.38	11.4	6.33	9.86		
	13	5.96	9.10										
Properties													
A_g, in.²		1.93		3.50		2.68		2.25		1.82		3.99	
r_z, in.		0.783		0.716		0.719		0.721		0.723		0.631	
ASD	LRFD												
Ω_c = 1.67	ϕ_c = 0.90												

[c] Shape is slender for compression with F_y = 36 ksi.
[†] Shape exceeds compact limit for flexure with F_y = 36 ksi.
Note: Heavy line indicates KL/r_z equal to or greater than 200.

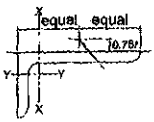

Table 4-12 (continued)
Available Strength in Axial Compression, kips
F_y = 36 ksi

L4-L3½ **Eccentrically Loaded Single Angles**

Shape		L4×3×								L3½×3½×			
		½		⅜		5/16		¼[c,f]		½		7/16	
lb/ft		11.1		8.50		7.20		5.80		11.1		9.80	
Design		P_n/Ω_c ASD	$\phi_c P_n$ LRFD	P_n/Ω_c ASD	$\phi_c P_n$ LRFD	P_n/Ω_c ASD	$\phi_c P_n$ LRFD	P_n/Ω_c ASD	$\phi_c P_n$ LRFD	P_n/Ω_c ASD	$\phi_c P_n$ LRFD	P_n/Ω_c ASD	$\phi_c P_n$ LRFD
Effective length, KL (ft), with respect to least radius of gyration, r_z	0	39.1	58.8	38.2	57.4	37.6	56.5	30.6	46.0	33.3	50.1	32.0	48.1
	1	38.5	58.0	37.4	56.4	36.3	54.7	30.4	45.6	32.8	49.3	31.5	47.3
	2	36.8	55.7	35.2	53.3	32.9	49.9	30.4	45.2	31.2	46.9	29.9	45.0
	3	32.8	49.8	30.6	46.6	29.0	44.1	26.4	40.3	28.7	43.4	27.5	41.5
	4	27.8	42.3	25.4	38.8	23.6	36.2	21.3	32.6	25.8	39.1	24.6	37.2
	5	23.2	35.5	20.7	31.8	19.0	29.2	16.9	26.0	22.7	34.4	21.5	32.7
	6	19.2	29.5	16.8	25.9	15.2	23.5	13.4	20.7	19.6	29.8	18.5	28.2
	7	15.8	24.3	13.6	21.0	12.2	18.9	10.7	16.6	16.7	25.5	15.7	23.9
	8	13.0	20.0	11.0	17.0	9.83	15.2	8.57	13.3	14.0	21.5	13.1	20.0
	9	10.8	16.7	9.13	14.1	8.09	12.5	7.00	10.9	11.9	18.2	11.0	16.9
	10	9.20	14.2	7.68	11.8	6.78	10.5	5.84	9.04	10.2	15.5	9.41	14.4
	11									8.78	13.4	8.11	12.4
Properties													
A_g, in.²		3.25		2.49		2.09		1.69		3.25		2.89	
r_z, in.		0.633		0.636		0.638		0.639		0.679		0.681	
ASD		LRFD		[c] Shape is slender for compression with F_y = 36 ksi.									
Ω_c = 1.67		ϕ_c = 0.90		[f] Shape exceeds compact limit for flexure with F_y = 36 ksi. Note: Heavy line indicates KL/r_z equal to or greater than 200.									

Table 4-12 (continued)

Available Strength in Axial Compression, kips

Eccentrically Loaded Single Angles

F_y = 36 ksi

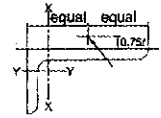

L3½

Shape		L3½×3½×						L3½×3×					
		3/8		5/16		1/4[c]		1/2		7/16		3/8	
lb/ft		8.50		7.20		5.80		10.2		9.10		7.90	
Design		P_n/Ω_c ASD	$\phi_c P_n$ LRFD	P_n/Ω_c ASD	$\phi_c P_n$ LRFD	P_n/Ω_c ASD	$\phi_c P_n$ LRFD	P_n/Ω_c ASD	$\phi_c P_n$ LRFD	P_n/Ω_c ASD	$\phi_c P_n$ LRFD	P_n/Ω_c ASD	$\phi_c P_n$ LRFD
Effective length, KL (ft), with respect to least radius of gyration, r_z	0	30.6	46.0	28.0	42.1	21.2	31.8	36.8	55.2	37.9	56.9	38.7	58.1
	1	30.1	45.2	27.5	41.4	21.0	31.6	36.2	54.5	37.2	56.0	37.8	57.0
	2	28.5	42.9	26.0	39.2	20.6	30.9	34.6	52.3	35.2	53.3	35.4	53.7
	3	26.1	39.4	23.8	35.9	19.8	29.0	32.1	48.9	32.3	49.3	31.8	48.6
	4	23.2	35.2	21.1	32.0	17.9	26.7	28.5	43.7	28.2	43.3	27.3	42.1
	5	20.2	30.7	18.3	27.8	16.0	24.2	23.2	35.7	22.6	34.8	21.5	33.2
	6	17.3	26.3	15.5	23.6	13.5	20.6	18.8	29.0	18.0	27.9	17.0	26.3
	7	14.5	22.2	13.0	19.8	11.3	17.2	15.2	23.4	14.4	22.3	13.4	20.8
	8	12.1	18.5	10.7	16.4	9.30	14.2	12.3	19.0	11.6	18.0	10.8	16.7
	9	10.1	15.5	8.93	13.7	7.69	11.8	10.2	15.8	9.59	14.8	8.81	13.6
	10	8.57	13.1	7.54	11.5	6.46	9.88	8.62	13.3	8.04	12.4	7.36	11.4
	11	7.36	11.3	6.45	9.86	5.50	8.41						

Properties						
A_g, in.^{2}	2.50	2.10	1.70	3.02	2.67	2.32
r_z, in.	0.683	0.685	0.688	0.618	0.620	0.622

ASD	LRFD
Ω_c = 1.67	ϕ_c = 0.90

[c] Shape is slender for compression with F_y = 36 ksi.

Note: Heavy line indicates KL/r_z equal to or greater than 200.

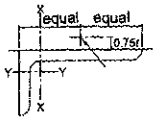

Table 4-12 (continued)
Available Strength in Axial Compression, kips

F_y = 36 ksi

L3½ **Eccentrically Loaded Single Angles**

Shape		L3½×3×				L3½×2½×							
		5/16		1/4[c]		1/2		3/8		5/16		1/4[c]	
lb/ft		6.60		5.40		9.40		7.20		6.10		4.90	
Design		P_n/Ω_c ASD	$\phi_c P_n$ LRFD	P_n/Ω_c ASD	$\phi_c P_n$ LRFD	P_n/Ω_c ASD	$\phi_c P_n$ LRFD	P_n/Ω_c ASD	$\phi_c P_n$ LRFD	P_n/Ω_c ASD	$\phi_c P_n$ LRFD	P_n/Ω_c ASD	$\phi_c P_n$ LRFD
Effective length, KL (ft), with respect to least radius of gyration, r_z	0	34.5	51.8	24.3	36.5	28.1	42.3	27.5	41.4	27.2	40.9	26.0	39.1
	1	34.6	52.0	24.3	36.4	27.6	41.6	26.9	40.5	25.9	38.9	24.9	37.5
	2	35.3	53.1	23.3	34.8	25.5	38.6	23.6	35.8	22.8	34.5	21.7	32.9
	3	30.2	46.3	22.4	33.3	21.7	33.0	19.9	30.2	18.9	28.8	17.6	26.8
	4	25.5	39.3	22.8	34.4	18.0	27.4	16.1	24.7	15.1	23.1	13.7	21.1
	5	20.0	31.0	18.1	28.1	14.7	22.5	12.9	19.8	11.9	18.3	10.6	16.4
	6	15.5	24.1	13.9	21.6	11.8	18.2	10.2	15.7	9.30	14.3	8.26	12.8
	7	12.2	18.9	10.8	16.8	9.55	14.7	8.12	12.5	7.33	11.3	6.44	9.96
	8	9.67	15.0	8.49	13.2	7.86	12.1	6.61	10.2	5.93	9.14	5.17	7.98
	9	7.87	12.2	6.87	10.7							4.24	6.54
	10	6.54	10.1	5.68	8.82								
Properties													
A_g, in.^{2}		1.95		1.58		2.77		2.12		1.79		1.45	
r_z, in.		0.624		0.628		0.532		0.535		0.538		0.541	

ASD	LRFD
Ω_c = 1.67	ϕ_c = 0.90

[c] Shape is slender for compression with F_y = 36 ksi.

Note: Heavy line indicates KL/r_z equal to or greater than 200.

Table 4-12 (continued)

Available Strength in Axial Compression, kips

Eccentrically Loaded Single Angles

F_y = 36 ksi

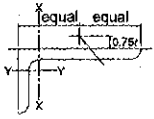

L3

Shape		L3×3×											
		1/2		7/16		3/8		5/16		1/4		3/16[c,f]	
lb/ft		9.40		8.30		7.20		6.10		4.90		3.71	
Design		P_n/Ω_c ASD	$\phi_c P_n$ LRFD	P_n/Ω_c ASD	$\phi_c P_n$ LRFD	P_n/Ω_c ASD	$\phi_c P_n$ LRFD	P_n/Ω_c ASD	$\phi_c P_n$ LRFD	P_n/Ω_c ASD	$\phi_c P_n$ LRFD	P_n/Ω_c ASD	$\phi_c P_n$ LRFD
Effective length, KL (ft), with respect to least radius of gyration, r_z	0	25.3	38.1	24.3	36.5	23.2	34.9	21.7	32.6	19.4	29.2	12.7	19.1
	1	24.8	37.3	23.8	35.7	22.7	34.1	21.2	31.9	19.1	28.7	12.6	18.9
	2	23.2	35.0	22.2	33.5	21.1	31.8	19.7	29.7	17.7	26.7	12.2	18.3
	3	21.0	31.7	19.9	30.2	18.9	28.5	17.5	26.5	15.7	23.7	11.2	16.7
	4	18.3	27.8	17.3	26.3	16.3	24.7	15.0	22.8	13.4	20.3	10.0	15.0
	5	15.7	23.8	14.7	22.4	13.7	20.9	12.5	19.1	11.1	16.9	8.95	13.3
	6	13.1	20.0	12.2	18.7	11.3	17.3	10.3	15.7	8.97	13.7	7.29	11.1
	7	10.8	16.5	10.0	15.3	9.19	14.1	8.27	12.7	7.17	11.0	5.83	8.92
	8	8.99	13.7	8.27	12.6	7.55	11.5	6.75	10.3	5.80	8.88	4.68	7.16
	9	7.58	11.6	6.93	10.6	6.30	9.64	5.60	8.57	4.79	7.32	3.84	5.86
Properties													
A_g, in.^{2}		2.76		2.43		2.11		1.78		1.44		1.09	
r_z, in.		0.580		0.580		0.581		0.583		0.585		0.586	
ASD		LRFD											
Ω_c = 1.67		ϕ_c = 0.90											

[c] Shape is slender for compression with F_y = 36 ksi.
[f] Shape exceeds compact limit for flexure with F_y = 36 ksi.
Note: Heavy line indicates KL/r_z equal to or greater than 200.

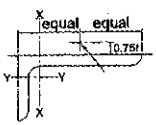

Table 4-12 (continued)
Available Strength in Axial Compression, kips
F_y = 36 ksi

L3 Eccentrically Loaded Single Angles

Shape		L3×2½×											
		1/2		7/16		3/8		5/16		1/4		3/16[e,f]	
lb/ft		8.50		7.60		6.60		5.60		4.50		3.39	
Design		P_n/Ω_c	$\phi_c P_n$	P_n/Ω_c	$\phi_c P_n$	P_n/Ω_c	$\phi_c P_n$	P_n/Ω_c	$\phi_c P_n$	P_n/Ω_c	$\phi_c P_n$	P_n/Ω_c	$\phi_c P_n$
		ASD	LRFD	ASD	LRFD	ASD	LRFD	ASD	LRFD	ASD	LRFD	ASD	LRFD
Effective length, KL (ft), with respect to least radius of gyration, r_z	0	24.8	37.3	25.5	38.4	26.1	39.3	26.7	40.2	24.2	36.4	14.7	22.2
	1	24.4	36.7	25.0	37.6	25.5	38.4	25.9	39.0	24.5	36.7	14.5	21.7
	2	23.2	35.1	23.5	35.6	23.7	35.9	23.6	35.9	22.0	33.5	13.7	20.4
	3	21.3	32.5	21.3	32.5	20.9	31.9	20.1	30.8	18.1	27.9	13.3	19.5
	4	17.4	26.6	16.9	25.9	16.3	25.0	15.4	23.8	14.0	21.7	11.9	18.6
	5	13.8	21.2	13.2	20.4	12.5	19.3	11.7	18.0	10.4	16.1	8.70	13.6
	6	10.9	16.8	10.3	15.9	9.65	14.9	8.84	13.7	7.77	12.1	6.47	10.1
	7	8.70	13.4	8.15	12.6	7.56	11.7	6.85	10.6	5.96	9.24	4.91	7.65
	8	7.09	10.9	6.61	10.2	6.08	9.38	5.46	8.44	4.72	7.31	3.86	6.00
Properties													
A_g, in.^{2}		2.50		2.22		1.93		1.63		1.32		1.00	
r_z, in.		0.516		0.516		0.517		0.518		0.520		0.521	
ASD		LRFD		[e] Shape is slender for compression with F_y = 36 ksi.									
Ω_c = 1.67		ϕ_c = 0.90		[f] Shape exceeds compact limit for flexure with F_y = 36 ksi. Note: Heavy line indicates KL/r_z equal to or greater than 200.									

Table 4-12 (continued)

F_y = 36 ksi

Available Strength in Axial Compression, kips

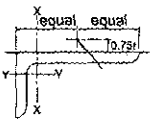

Eccentrically Loaded Single Angles L3-L2$^1/_2$

Shape		L3×2×										L2$^1/_2$×2$^1/_2$×	
		$^1/_2$		$^3/_8$		$^5/_{16}$		$^1/_4$		$^3/_{16}$[c,f]		$^1/_2$	
lb/ft		7.70		5.90		5.00		4.10		3.07		7.70	
Design		P_n/Ω_c	$\phi_c P_n$	P_n/Ω_c	$\phi_c P_n$	P_n/Ω_c	$\phi_c P_n$	P_n/Ω_c	$\phi_c P_n$	P_n/Ω_c	$\phi_c P_n$	P_n/Ω_c	$\phi_c P_n$
		ASD	LRFD	ASD	LRFD	ASD	LRFD	ASD	LRFD	ASD	LRFD	ASD	LRFD
Effective length, KL (ft), with respect to least radius of gyration, r_z	0	18.3	27.5	17.6	26.4	17.0	25.5	16.3	24.5	15.3	23.0	18.1	27.2
	1	17.4	26.2	16.6	25.0	15.9	24.0	15.4	23.2	14.3	21.6	17.6	26.4
	2	15.3	23.1	14.2	21.5	13.5	20.5	12.9	19.6	11.8	17.9	16.1	24.4
	3	12.7	19.3	11.5	17.5	10.8	16.5	10.0	15.4	8.95	13.7	14.1	21.4
	4	10.2	15.5	9.04	13.8	8.35	12.8	7.58	11.6	6.61	10.2	11.9	18.1
	5	7.97	12.2	6.93	10.6	6.32	9.72	5.64	8.69	4.87	7.53	9.78	14.9
	6	6.29	9.65	5.38	8.26	4.85	7.46	4.27	6.58	3.63	5.61	7.85	12.0
	7	5.08	7.79	4.28	6.58	3.84	5.90	3.35	5.15	2.81	4.34	6.38	9.76
	8											5.28	8.07
Properties													
A_g, in.^{2}		2.26		1.75		1.48		1.20		0.917		2.26	
r_z, in.		0.425		0.426		0.428		0.431		0.435		0.481	

ASD	LRFD
Ω_c = 1.67	ϕ_c = 0.90

[c] Shape is slender for compression with F_y = 36 ksi.
[f] Shape exceeds compact limit for flexure with F_y = 36 ksi.
Note: Heavy line indicates KL/r_z equal to or greater than 200.

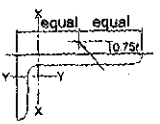

Table 4-12 (continued)
Available Strength in Axial Compression, kips
F_y = 36 ksi

L2½ **Eccentrically Loaded Single Angles**

Shape		L2½×2½×								L2½×2×	
		3/8		5/16		1/4		3/16[c]		3/8	
lb/ft		5.90		5.00		4.10		3.07		5.30	
Design		P_n/Ω_c ASD	$\phi_c P_n$ LRFD	P_n/Ω_c ASD	$\phi_c P_n$ LRFD	P_n/Ω_c ASD	$\phi_c P_n$ LRFD	P_n/Ω_c ASD	$\phi_c P_n$ LRFD	P_n/Ω_c ASD	$\phi_c P_n$ LRFD
Effective length, KL (ft), with respect to least radius of gyration, r_z	0	17.0	25.5	16.0	24.1	14.8	22.2	11.7	17.5	16.9	25.4
	1	16.4	24.7	15.5	23.3	14.3	21.5	11.5	17.3	16.4	24.7
	2	14.9	22.5	14.0	21.1	12.8	19.3	10.9	16.4	15.0	22.6
	3	12.9	19.5	11.9	18.1	10.8	16.4	9.16	13.9	11.9	18.1
	4	10.6	16.2	9.77	14.9	8.77	13.4	7.33	11.2	8.94	13.7
	5	8.55	13.1	7.76	11.9	6.88	10.5	5.68	8.69	6.65	10.2
	6	6.73	10.3	6.04	9.24	5.29	8.10	4.32	6.61	5.06	7.79
	7	5.39	8.24	4.80	7.34	4.16	6.37	3.36	5.14		
	8	4.40	6.74	3.89	5.96	3.36	5.13	2.69	4.11		
Properties											
A_g, in.^{2}		1.73		1.46		1.19		0.901		1.55	
r_z, in.		0.481		0.481		0.482		0.482		0.419	
ASD		LRFD		[c] Shape is slender for compression with F_y = 36 ksi. Note: Heavy line indicates KL/r_z equal to or greater than 200.							
Ω_c = 1.67		ϕ_c = 0.90									

Table 4-12 (continued)

Available Strength in Axial Compression, kips

Eccentrically Loaded Single Angles

F_y = 36 ksi

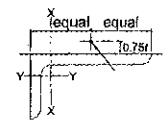

L2½

Shape		L2½×2×						L2½×1½×			
		5/16		1/4		3/16[c]		1/4		3/16[c]	
lb/ft		4.50		3.62		2.75		3.19		2.44	
Design		P_n/Ω_c	$\phi_c P_n$	P_n/Ω_c	$\phi_c P_n$	P_n/Ω_c	$\phi_c P_n$	P_n/Ω_c	$\phi_c P_n$	P_n/Ω_c	$\phi_c P_n$
		ASD	LRFD	ASD	LRFD	ASD	LRFD	ASD	LRFD	ASD	LRFD
Effective length, KL (ft), with respect to least radius of gyration, r_z	0	17.5	26.3	17.4	26.2	15.4	23.2	9.06	13.6	8.63	13.0
	1	16.8	25.4	16.6	25.1	15.4	23.0	8.27	12.5	7.84	11.8
	2	15.1	23.0	14.3	21.8	12.7	19.4	6.61	10.1	6.04	9.21
	3	11.5	17.7	10.7	16.4	9.55	14.7	4.86	7.44	4.29	6.58
	4	8.46	13.0	7.65	11.8	6.63	10.3	3.43	5.27	2.95	4.54
	5	6.18	9.53	5.49	8.49	4.67	7.25	2.50	3.84	2.11	3.25
	6	4.64	7.15	4.07	6.29	3.41	5.29				
	7			3.14	4.84	2.61	4.03				
Properties											
A_g, in.^{2}		1.32		1.07		0.818		0.947		0.724	
r_z, in.		0.420		0.423		0.426		0.321		0.324	
ASD		LRFD		[c] Shape is slender for compression with F_y = 36 ksi.							
Ω_c = 1.67		ϕ_c = 0.90		Note: Heavy line indicates KL/r_z equal to or greater than 200.							

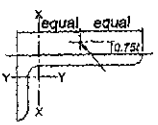

Table 4-12 (continued)
Available Strength in Axial Compression, kips

F_y = 36 ksi

L2 Eccentrically Loaded Single Angles

Shape		L2×2×									
		3/8		5/16		1/4		3/16		1/8[c,†]	
lb/ft		4.70		3.92		3.19		2.44		1.65	
Design		P_n/Ω_c ASD	$\phi_c P_n$ LRFD	P_n/Ω_c ASD	$\phi_c P_n$ LRFD	P_n/Ω_c ASD	$\phi_c P_n$ LRFD	P_n/Ω_c ASD	$\phi_c P_n$ LRFD	P_n/Ω_c ASD	$\phi_c P_n$ LRFD
Effective length, KL (ft), with respect to least radius of gyration, r_z	0	11.6	17.5	11.2	16.8	10.5	15.8	9.44	14.2	5.58	8.39
	1	11.1	16.7	10.6	16.0	9.95	15.0	8.91	13.4	5.45	8.19
	2	9.70	14.7	9.21	13.9	8.52	12.9	7.57	11.4	4.88	7.32
	3	7.93	12.0	7.42	11.3	6.76	10.3	5.90	8.98	4.12	6.16
	4	6.18	9.42	5.69	8.69	5.09	7.78	4.37	6.67	3.36	4.95
	5	4.67	7.14	4.24	6.48	3.74	5.71	3.14	4.81	2.39	3.64
	6	3.62	5.54	3.25	4.97	2.83	4.33	2.35	3.59	1.76	2.67

Properties					
A_g, in.^{2}	1.37	1.16	0.944	0.722	0.491
r_z, in.	0.386	0.386	0.387	0.389	0.391

ASD	LRFD
Ω_c = 1.67	ϕ_c = 0.90

[c] Shape is slender for compression with F_y = 36 ksi.
[†] Shape exceeds compact limit for flexure with F_y = 36 ksi.
Note: Heavy line indicates KL/r_z equal to or greater than 200.

Table 4-13
Available Strength in Axial Compression, kips
Concrete Filled Rectangular HSS

F_y = 46 ksi
f'_c = 4 ksi

4

COMPOSITE
HSS20-HSS16

Shape		HSS20×12×						HSS16×12×					
		5/8		1/2		3/8		5/8		1/2		3/8	
t_{design}, in.		0.581		0.465		0.349		0.581		0.465		0.349	
Steel, lb/ft		127		103		78.5		110		89.7		68.3	
Design		P_n/Ω_c	$\phi_c P_n$	P_n/Ω_c	$\phi_c P_n$	P_n/Ω_c	$\phi_c P_n$	P_n/Ω_c	$\phi_c P_n$	P_n/Ω_c	$\phi_c P_n$	P_n/Ω_c	$\phi_c P_n$
		ASD	LRFD	ASD	LRFD	ASD	LRFD	ASD	LRFD	ASD	LRFD	ASD	LRFD
Effective length, $(KL)_y$, with respect to weak axis (ft)	0	1150	1730	1010	1510	865	1300	970	1450	849	1270	724	1090
	6	1130	1700	993	1490	850	1280	954	1430	835	1250	711	1070
	7	1130	1690	987	1480	845	1270	948	1420	830	1240	707	1060
	8	1120	1680	980	1470	839	1260	941	1410	824	1240	702	1050
	9	1110	1660	972	1460	832	1250	934	1400	817	1230	696	1040
	10	1100	1650	964	1450	825	1240	925	1390	810	1210	690	1030
	11	1090	1630	955	1430	817	1230	916	1370	802	1200	683	1020
	12	1080	1620	945	1420	808	1210	906	1360	793	1190	675	1010
	13	1070	1600	934	1400	798	1200	896	1340	784	1180	667	1000
	14	1050	1580	922	1380	788	1180	885	1330	774	1160	658	987
	15	1040	1560	910	1360	777	1170	873	1310	763	1150	649	974
	16	1020	1540	897	1350	766	1150	860	1290	752	1130	639	959
	17	1010	1510	883	1330	754	1130	847	1270	741	1110	629	944
	18	994	1490	869	1300	741	1110	833	1250	728	1090	619	928
	19	977	1470	855	1280	728	1090	819	1230	716	1070	608	911
	20	960	1440	839	1260	715	1070	804	1210	703	1050	596	894
	21	942	1410	824	1240	701	1050	788	1180	689	1030	584	877
	22	924	1390	807	1210	687	1030	773	1160	675	1010	572	858
	23	905	1360	791	1190	672	1010	756	1130	661	992	560	840
	24	886	1330	774	1160	658	986	740	1110	647	970	547	821
	25	866	1300	757	1130	642	964	723	1080	632	948	534	802
	26	846	1270	739	1110	627	940	706	1060	617	925	521	782
	27	826	1240	721	1080	611	917	689	1030	602	902	508	762
	28	806	1210	703	1050	595	893	671	1010	586	879	495	742
	29	785	1180	685	1030	580	869	653	980	571	856	481	722
	30	764	1150	666	1000	563	845	636	953	555	832	468	701
	32	722	1080	629	944	531	797	600	899	523	785	440	661
	34	680	1020	592	888	499	748	564	845	492	737	413	620
	36	638	957	555	833	467	700	528	791	460	690	386	579
	38	597	895	519	778	435	652	492	738	429	643	359	539
	40	556	834	483	724	404	605	457	686	398	598	333	499
Properties													
M_{nx}/Ω_b	$\phi_b M_{nx}$ kip-ft	589	885	491	738	386	581	416	626	347	521	274	412
M_{ny}/Ω_b	$\phi_b M_{ny}$ kip-ft	401	603	331	498	260	391	335	504	279	420	219	329
$P_{ex}(K_xL_x)^2/10^4$	kip-in.^{2}	72300		62800		52500		40300		35200		29300	
$P_{ey}(K_yL_y)^2/10^4$	kip-in.^{2}	30500		26400		21900		24900		21600		18000	
r_{my}, in.		4.93		4.99		5.04		4.80		4.86		4.91	
r_{mx}/r_{my}		1.54		1.54		1.55		1.27		1.28		1.28	

ASD	LRFD
Ω_c = 2.00	ϕ_c = 0.75

4

COMPOSITE
HSS16-HSS14

Table 4-13 (continued)
Available Strength in Axial Compression, kips
Concrete Filled Rectangular HSS

F_y = 46 ksi
f'_c = 4 ksi

Shape		HSS16×12×		HSS16×8×								HSS14×10×	
		5/16		5/8		1/2		3/8		5/16		5/8	
t_{design}, in.		0.291		0.581		0.465		0.349		0.291		0.581	
Steel, lb/ft		57.4		93.3		76.1		58.1		48.9		93.3	
Design		P_n/Ω_c ASD	$\phi_c P_n$ LRFD	P_n/Ω_c ASD	$\phi_c P_n$ LRFD	P_n/Ω_c ASD	$\phi_c P_n$ LRFD	P_n/Ω_c ASD	$\phi_c P_n$ LRFD	P_n/Ω_c ASD	$\phi_c P_n$ LRFD	P_n/Ω_c ASD	$\phi_c P_n$ LRFD
Effective length, $(KL)_y$, with respect to weak axis (ft)	0	660	990	763	1140	662	992	558	837	503	754	783	1180
	6	649	973	736	1100	638	957	538	807	484	726	765	1150
	7	644	967	726	1090	630	945	531	796	478	717	758	1140
	8	640	959	715	1070	620	931	523	784	471	706	750	1130
	9	634	951	703	1050	610	915	514	771	462	694	742	1110
	10	628	942	689	1030	598	898	504	756	453	680	732	1100
	11	622	933	675	1010	586	879	493	740	444	666	722	1080
	12	615	922	659	989	573	859	482	723	433	650	711	1070
	13	607	911	643	964	558	838	470	705	422	634	699	1050
	14	599	898	625	938	543	815	457	686	411	616	686	1030
	15	590	886	607	911	528	792	444	666	399	598	673	1010
	16	581	872	588	883	512	768	430	645	386	579	659	988
	17	572	858	569	854	495	743	416	624	373	560	644	966
	18	562	843	549	824	478	717	402	602	360	540	629	943
	19	552	828	529	793	461	691	387	580	347	520	613	920
	20	541	812	508	763	443	664	372	558	333	500	597	896
	21	530	796	488	731	425	638	357	535	319	479	581	871
	22	519	779	467	700	407	611	341	512	306	459	564	846
	23	508	761	446	669	389	584	326	489	292	438	547	821
	24	496	744	425	638	371	557	311	467	278	417	530	795
	25	484	726	405	607	353	530	296	444	264	397	513	769
	26	472	708	384	577	336	504	281	422	251	376	495	743
	27	460	689	366	550	318	478	266	400	238	356	478	717
	28	447	671	348	523	301	452	252	378	225	337	460	691
	29	435	652	330	497	285	427	238	357	212	318	443	664
	30	422	633	313	471	268	402	224	336	199	299	426	638
	32	397	595	280	421	236	355	197	296	175	263	391	587
	34	372	558	248	373	209	314	175	262	155	233	358	537
	36	347	520	221	333	187	280	156	234	139	208	325	488
	38	322	483	199	299	168	252	140	210	124	187	294	440
	40	298	447	179	269	151	227	126	189	112	168	266	399
Properties													
M_{ox}/Ω_b $\phi_b M_{ox}$	kip-ft	235	353	322	484	270	406	215	323	185	278	300	450
M_{oy}/Ω_b $\phi_b M_{oy}$	kip-ft	187	281	192	288	160	241	126	190	108	162	233	351
$P_{ex}(K_x L_x)^2/10^4$	kip-in.^{2}	26200		29100		25700		21600		19200		24500	
$P_{ey}(K_y L_y)^2/10^4$	kip-in.^{2}	16000		9060		7950		6630		5900		13900	
r_{my}, in.		4.94		3.27		3.32		3.37		3.40		3.98	
r_{mx}/r_{my}		1.28		1.79		1.80		1.80		1.80		1.33	

ASD	LRFD
$\Omega_c = 2.00$	$\phi_c = 0.75$

Note: Dashed line indicates the KL beyond which bare steel strength controls.

Table 4-13 (continued)

F_y = 46 ksi
f'_c = 4 ksi

Available Strength in Axial Compression, kips

Concrete Filled Rectangular HSS

4

COMPOSITE
HSS14-HSS12

Shape		HSS14×10×								HSS12×10×			
		1/2		3/8		5/16		1/4[c,f]		1/2		3/8	
t_{design}, in.		0.465		0.349		0.291		0.233		0.465		0.349	
Steel, lb/ft		76.1		58.1		48.9		39.4		69.3		53.0	
Design		P_n/Ω_c ASD	$\phi_c P_n$ LRFD	P_n/Ω_c ASD	$\phi_c P_n$ LRFD	P_n/Ω_c ASD	$\phi_c P_n$ LRFD	P_n/Ω_c ASD	$\phi_c P_n$ LRFD	P_n/Ω_c ASD	$\phi_c P_n$ LRFD	P_n/Ω_c ASD	$\phi_c P_n$ LRFD
Effective length, $(KL)_y$, with respect to weak axis (ft)	0	682	1020	578	867	523	784	468	701	607	911	514	772
	6	666	998	564	846	510	765	456	684	593	889	502	752
	7	660	990	559	839	505	758	452	677	587	881	497	746
	8	653	980	553	830	500	750	447	670	581	872	492	738
	9	646	969	547	820	494	741	441	662	574	862	486	729
	10	638	957	540	810	488	732	435	653	567	851	480	720
	11	629	943	532	798	481	721	429	643	559	838	473	709
	12	619	929	524	786	473	709	422	633	550	825	465	698
	13	609	913	515	773	465	697	414	621	541	811	457	686
	14	598	897	506	758	456	684	406	610	531	796	449	673
	15	586	880	496	744	447	670	398	597	520	781	440	660
	16	574	862	485	728	437	656	389	584	509	764	430	645
	17	562	843	474	712	427	641	380	570	498	747	421	631
	18	549	823	463	695	417	626	371	556	486	729	410	616
	19	535	803	452	677	407	610	361	542	474	711	400	600
	20	522	782	440	660	396	593	351	527	461	692	389	584
	21	507	761	428	641	385	577	341	511	449	673	378	567
	22	493	740	415	623	373	560	331	496	436	653	367	551
	23	478	718	403	604	362	542	320	480	422	633	356	534
	24	464	695	390	585	350	525	309	464	409	613	344	516
	25	449	673	377	565	338	507	299	448	395	593	333	499
	26	434	650	364	546	326	490	288	432	382	573	321	482
	27	418	628	351	527	315	472	277	416	368	552	309	464
	28	403	605	338	507	303	454	267	400	354	532	298	447
	29	388	582	325	488	291	436	256	384	341	511	286	429
	30	373	560	312	468	279	419	245	368	327	491	275	412
	32	343	515	287	430	256	384	224	337	300	451	252	378
	34	314	471	262	393	234	350	204	306	274	412	230	345
	36	286	429	238	357	212	318	185	277	249	374	208	313
	38	259	388	215	322	191	286	166	249	225	337	188	281
	40	234	350	194	291	172	258	150	224	203	304	169	254
Properties													
M_{nx}/Ω_b $\phi_b M_{nx}$	kip-ft	251	377	199	298	171	257	141	212	198	298	157	236
M_{ny}/Ω_b $\phi_b M_{ny}$	kip-ft	195	293	154	231	132	198	108	163	173	260	137	206
$P_{ex}(K_x L_x)^2/10^4$	kip-in.^{2}	21600		18000		16000		14000		14500		12100	
$P_{ey}(K_y L_y)^2/10^4$	kip-in.^{2}	12300		10200		9040		7860		10700		8900	
r_{my}, in.		4.04		4.09		4.12		4.14		3.96		4.01	
r_{mx}/r_{my}		1.33		1.33		1.33		1.33		1.16		1.17	

ASD	LRFD
Ω_c = 2.00	ϕ_c = 0.75

[c] Shape is noncompact for compression with F_y = 46 ksi.
[f] Shape is noncompact for flexure with F_y = 46 ksi.

4

COMPOSITE HSS12

Table 4-13 (continued)
Available Strength in Axial Compression, kips
Concrete Filled Rectangular HSS

F_y = 46 ksi
f'_c = 4 ksi

Shape		HSS12×10×				HSS12×8×							
		5/16		1/4		5/8		1/2		3/8		1/4	
t_{design}, in.		0.291		0.233		0.581		0.465		0.349		0.233	
Steel, lb/ft		44.6		36.0		76.3		62.5		47.9		32.6	
Design		P_n/Ω_c	$\phi_c P_n$	P_n/Ω_c	$\phi_c P_n$	P_n/Ω_c	$\phi_c P_n$	P_n/Ω_c	$\phi_c P_n$	P_n/Ω_c	$\phi_c P_n$	P_n/Ω_c	$\phi_c P_n$
		ASD	LRFD	ASD	LRFD	ASD	LRFD	ASD	LRFD	ASD	LRFD	ASD	LRFD
Effective length, $(KL)_y$, with respect to weak axis (ft)	0	463	695	415	622	608	913	528	793	444	666	354	531
	6	452	678	404	606	586	878	509	763	427	641	340	510
	7	448	671	400	600	578	866	502	753	422	632	335	503
	8	443	664	396	594	568	853	494	741	415	622	330	495
	9	438	656	391	586	558	837	485	728	408	611	324	486
	10	432	648	386	578	547	821	476	714	400	599	317	476
	11	425	638	380	570	535	803	466	698	391	586	310	465
	12	419	628	373	560	522	783	455	682	382	572	303	454
	13	411	617	367	550	508	763	443	664	372	558	295	442
	14	404	605	360	539	494	741	431	646	361	542	286	429
	15	395	593	352	528	479	718	418	627	351	526	277	416
	16	387	580	344	516	463	695	404	607	339	509	268	402
	17	378	567	336	504	447	671	391	586	328	492	259	388
	18	369	553	328	492	431	647	377	565	316	474	249	374
	19	359	539	319	479	414	622	362	544	304	456	239	359
	20	349	524	310	465	398	596	348	522	292	438	229	344
	21	340	509	301	452	381	571	333	500	280	420	220	329
	22	329	494	292	438	364	545	319	478	267	401	210	314
	23	319	479	282	424	347	520	304	456	255	383	200	299
	24	309	463	273	409	331	497	290	434	243	364	190	285
	25	298	447	263	395	315	474	275	413	231	346	180	270
	26	288	432	254	381	300	451	261	391	219	328	170	255
	27	277	416	244	366	285	429	247	370	207	310	161	241
	28	267	400	235	352	270	406	233	350	195	293	151	227
	29	256	384	225	338	256	385	220	329	184	276	142	214
	30	246	368	216	324	242	363	206	310	173	259	133	200
	32	225	338	197	296	214	321	181	272	152	228	117	176
	34	205	308	179	269	189	285	161	241	135	202	104	156
	36	186	279	162	243	169	254	143	215	120	180	92.6	139
	38	167	251	145	218	152	228	129	193	108	162	83.1	125
	40	151	226	131	197	137	206	116	174	97.3	146	75.0	113
Properties													
M_{nx}/Ω_b	$\phi_b M_{nx}$ kip-ft	135	203	112	168	202	304	171	257	136	204	97.3	146
M_{ny}/Ω_b	$\phi_b M_{ny}$ kip-ft	117	176	97.0	146	150	226	126	190	100	150	71.1	107
$P_{ex}(K_xL_x)^2/10^4$	kip-in.^{2}	10800		9390		13600		12000		10100		7880	
$P_{ey}(K_yL_y)^2/10^4$	kip-in.^{2}	7920		6890		6900		6100		5110		3940	
r_{my}, in.		4.04		4.07		3.16		3.21		3.27		3.32	
r_{mx}/r_{my}		1.17		1.17		1.40		1.40		1.41		1.41	

ASD	LRFD
$\Omega_c = 2.00$	$\phi_c = 0.75$

Note: Dashed line indicates the KL beyond which bare steel strength controls.

Table 4-13 (continued)

F_y = 46 ksi
f'_c = 4 ksi

Available Strength in Axial Compression, kips

Concrete Filled Rectangular HSS

4

COMPOSITE
HSS12-HSS10

Shape		HSS12×6×								HSS10×8×			
		5/8		1/2		3/8		1/4		5/8		1/2	
t_{design}, in.		0.581		0.465		0.349		0.233		0.581		0.465	
Steel, lb/ft		67.8		55.7		42.8		29.2		67.8		55.7	
Design		P_n/Ω_c	$\phi_c P_n$	P_n/Ω_c	$\phi_c P_n$	P_n/Ω_c	$\phi_c P_n$	P_n/Ω_c	$\phi_c P_n$	P_n/Ω_c	$\phi_c P_n$	P_n/Ω_c	$\phi_c P_n$
		ASD	LRFD	ASD	LRFD	ASD	LRFD	ASD	LRFD	ASD	LRFD	ASD	LRFD
Effective length, $(KL)_n$, with respect to weak axis (ft)	0	519	778	447	670	373	560	293	440	532	799	461	691
	6	485	728	419	628	350	525	275	412	512	767	443	665
	7	474	712	409	614	342	513	268	402	504	756	437	655
	8	462	695	398	597	333	499	261	391	496	744	430	645
	9	449	675	386	579	323	484	253	380	487	730	422	633
	10	435	653	373	559	312	468	244	367	477	715	413	620
	11	420	631	359	539	301	451	235	353	466	699	404	606
	12	403	606	344	517	289	433	226	339	454	681	394	591
	13	387	581	329	494	276	414	216	324	442	663	384	576
	14	369	555	313	470	263	394	205	308	429	643	373	559
	15	352	529	297	446	250	375	195	292	415	623	361	542
	16	334	502	281	422	236	354	184	276	401	602	349	524
	17	316	474	265	397	223	334	173	260	387	580	337	506
	18	297	447	249	374	209	314	163	244	372	558	325	487
	19	279	420	234	352	196	294	152	228	357	537	312	468
	20	261	393	220	330	183	274	142	213	343	516	299	449
	21	244	366	206	309	170	255	132	197	329	495	286	429
	22	227	341	192	288	157	236	122	183	315	474	273	410
	23	210	316	178	268	145	218	112	168	301	453	260	390
	24	194	291	165	248	133	200	103	154	287	432	247	371
	25	178	268	152	229	123	184	94.9	142	273	411	235	352
	26	165	248	141	211	114	170	87.7	132	259	390	222	333
	27	153	230	130	196	105	158	81.3	122	246	370	210	315
	28	142	214	121	182	97.9	147	75.6	113	233	349	198	296
	29	133	199	113	170	91.2	137	70.5	106	219	330	186	279
	30	124	186	106	159	85.3	128	65.9	98.8	207	311	174	262
	32	109	164	92.9	140	74.9	112	57.9	86.8	182	274	154	231
	34	96.4	145	82.2	124	66.4	99.6	51.3	76.9	161	242	136	205
	36	86.0	129	73.4	110	59.2	88.8	45.7	68.6	144	216	121	183
	38	77.2	116	65.8	99.0	53.1	79.7	41.1	61.6	129	194	109	164
	40			59.4	89.3	48.0	71.9	37.1	55.6	116	175	98.4	148
Properties													
M_{ox}/Ω_b $\phi_b M_{nx}$	kip-ft	168	253	143	215	114	171	82.2	124	152	229	129	194
M_{oy}/Ω_b $\phi_b M_{ny}$	kip-ft	101	151	85.0	128	67.8	102	48.2	72.5	129	194	109	164
$P_{ex}(K_x L_x)^2/10^4$	kip-in.^{2}	10800		9520		8120		6330		8440		7480	
$P_{ey}(K_y L_y)^2/10^4$	kip-in.^{2}	3380		2980		2520		1950		5820		5140	
r_{my}, in.		2.39		2.44		2.49		2.54		3.09		3.14	
r_{mx}/r_{my}		1.79		1.79		1.80		1.80		1.20		1.21	

ASD	LRFD
Ω_c = 2.00	ϕ_c = 0.75

Note: Heavy line indicates KL/r_{my} equal to or greater than 200.
Dashed line indicates the KL beyond which bare steel strength controls.

4

COMPOSITE HSS10

Table 4-13 (continued)
Available Strength in Axial Compression, kips
Concrete Filled Rectangular HSS

F_y = 46 ksi
f'_c = 4 ksi

Shape		HSS10×8×								HSS10×6×			
		3/8		5/16		1/4		3/16		5/8		1/2	
t_{design}, in.		0.349		0.291		0.233		0.174		0.581		0.465	
Steel, lb/ft		42.8		36.1		29.2		22.2		59.3		48.9	
Design		P_n/Ω_c ASD	$\phi_c P_n$ LRFD	P_n/Ω_c ASD	$\phi_c P_n$ LRFD	P_n/Ω_c ASD	$\phi_c P_n$ LRFD	P_n/Ω_c ASD	$\phi_c P_n$ LRFD	P_n/Ω_c ASD	$\phi_c P_n$ LRFD	P_n/Ω_c ASD	$\phi_c P_n$ LRFD
Effective length, $(KL)_y$, with respect to weak axis (ft)	0	387	580	347	520	307	460	265	397	452	679	388	583
	6	372	558	334	500	295	442	254	381	424	637	363	545
	7	367	550	329	493	291	436	250	376	414	623	354	531
	8	361	542	324	486	286	429	246	369	403	606	345	517
	9	355	532	318	477	281	421	241	362	391	588	334	501
	10	348	521	311	467	275	412	236	354	378	569	322	483
	11	340	510	304	457	268	403	231	346	365	548	310	464
	12	332	497	297	445	262	393	225	337	350	526	297	445
	13	323	484	289	434	255	382	218	328	335	504	283	425
	14	314	470	281	421	247	371	212	318	319	480	269	404
	15	304	456	272	408	239	359	205	307	303	456	255	382
	16	294	441	263	395	231	347	198	297	287	432	241	362
	17	284	426	254	381	223	335	190	286	271	407	228	342
	18	274	410	245	367	215	322	183	274	255	383	215	323
	19	263	394	235	353	206	309	175	263	239	359	202	303
	20	252	378	225	338	198	296	168	252	223	335	189	284
	21	241	362	216	324	189	283	160	240	207	311	176	265
	22	231	346	206	309	180	270	152	229	192	288	164	246
	23	220	330	196	294	171	257	145	217	177	266	152	228
	24	209	313	187	280	163	244	137	206	163	245	140	210
	25	198	297	177	265	154	231	130	195	150	225	129	194
	26	188	282	167	251	146	219	122	184	139	208	119	179
	27	177	266	158	237	138	206	115	173	129	193	110	166
	28	167	251	149	224	129	194	108	162	120	180	103	154
	29	157	236	140	210	122	182	101	152	111	168	95.7	144
	30	148	221	131	197	114	171	94.6	142	104	157	89.4	134
	32	130	195	115	173	99.9	150	83.1	125	91.5	138	78.6	118
	34	115	172	102	153	88.5	133	73.7	110	81.1	122	69.6	105
	36	103	154	91.2	137	79.0	118	65.7	98.5	72.3	109	62.1	93.3
	38	92.0	138	81.9	123	70.9	106	59.0	88.4	64.9	97.6	55.7	83.8
	40	83.0	125	73.9	111	64.0	95.9	53.2	79.8				
Properties													
M_{nx}/Ω_b $\phi_b M_{nx}$	kip-ft	103	154	88.5	133	73.6	111	57.5	86.4	125	187	106	159
M_{ny}/Ω_b $\phi_b M_{ny}$	kip-ft	86.9	131	74.8	112	62.1	93.3	48.2	72.4	85.6	129	72.7	109
$P_{ex}(K_xL_x)^2/10^4$	kip-in.^{2}	6340		5660		4910		4100		6600		5860	
$P_{ey}(K_yL_y)^2/10^4$	kip-in.^{2}	4360		3880		3360		2800		2810		2500	
r_{my}, in.		3.19		3.22		3.25		3.28		2.34		2.39	
r_{mx}/r_{my}		1.21		1.21		1.21		1.21		1.53		1.53	

ASD	LRFD
$\Omega_c = 2.00$	$\phi_c = 0.75$

Note: Heavy line indicates KL/r_{my} equal to or greater than 200.
Dashed line indicates the KL beyond which bare steel strength controls.

Table 4-13 (continued)
Available Strength in Axial Compression, kips
Concrete Filled Rectangular HSS

F_y = 46 ksi
f'_c = 4 ksi

4 COMPOSITE HSS10

Shape		HSS10×6×								HSS10×5×			
		3/8		5/16		1/4		3/16		3/8		5/16	
t_{design}, in.		0.349		0.291		0.233		0.174		0.349		0.291	
Steel, lb/ft		37.7		31.8		25.8		19.6		35.1		29.7	
Design		P_n/Ω_c ASD	$\phi_c P_n$ LRFD	P_n/Ω_c ASD	$\phi_c P_n$ LRFD	P_n/Ω_c ASD	$\phi_c P_n$ LRFD	P_n/Ω_c ASD	$\phi_c P_n$ LRFD	P_n/Ω_c ASD	$\phi_c P_n$ LRFD	P_n/Ω_c ASD	$\phi_c P_n$ LRFD
Effective length, $(KL)_y$, with respect to weak axis (ft)	0	323	484	288	432	253	379	216	324	290	435	259	388
	6	302	453	270	405	237	355	202	303	264	397	236	354
	7	295	443	264	395	231	347	197	295	256	384	228	342
	8	287	431	256	385	225	337	191	287	246	369	219	329
	9	278	418	249	373	218	327	185	278	235	353	210	315
	10	269	403	240	360	210	315	179	268	224	336	200	300
	11	259	388	231	347	202	303	172	257	212	318	190	284
	12	248	372	222	333	194	291	164	246	200	300	179	268
	13	237	355	212	318	185	278	157	235	187	281	168	252
	14	225	338	202	303	176	264	149	223	175	262	156	235
	15	214	321	191	287	167	250	141	211	162	243	145	218
	16	202	303	181	271	158	236	133	199	150	224	134	201
	17	190	285	170	255	148	222	125	187	137	206	123	185
	18	178	268	160	240	139	208	116	175	126	190	113	169
	19	167	250	149	224	130	195	109	163	116	174	103	154
	20	155	233	139	209	121	181	101	151	106	159	92.6	139
	21	144	216	129	194	112	168	93.2	140	96.2	145	84.0	126
	22	133	200	119	179	103	155	85.8	129	87.6	132	76.5	115
	23	122	183	110	165	95.0	142	78.6	118	80.2	121	70.0	105
	24	112	169	101	151	87.2	131	72.2	108	73.6	111	64.3	96.5
	25	104	155	93.0	139	80.4	121	66.5	99.8	67.9	102	59.3	88.9
	26	95.7	144	86.0	129	74.3	111	61.5	92.3	62.7	94.3	54.8	82.2
	27	88.8	133	79.7	120	68.9	103	57.0	85.6	58.2	87.5	50.8	76.2
	28	82.5	124	74.1	111	64.1	96.1	53.0	79.6	54.1	81.3	47.2	70.9
	29	76.9	116	69.1	104	59.7	89.6	49.4	74.2	50.4	75.8	44.0	66.1
	30	71.9	108	64.6	96.9	55.8	83.7	46.2	69.3	47.1	70.8	41.2	61.7
	32	63.2	94.9	56.7	85.1	49.1	73.6	40.6	60.9	41.4	62.3	36.2	54.3
	34	56.0	84.0	50.3	75.4	43.5	65.2	36.0	54.0	36.7	55.2	32.0	48.1
	36	49.9	75.0	44.8	67.3	38.8	58.1	32.1	48.1				
	38	44.8	67.3	40.2	60.4	34.8	52.2	28.8	43.2				
	40	40.4	60.7	36.3	54.5	31.4	47.1	26.0	39.0				
Properties													
M_{nx}/Ω_b / $\phi_b M_{nx}$	kip-ft	85.2	128	73.7	111	61.6	92.6	48.3	72.6	76.2	115	66.2	99.5
M_{ny}/Ω_b / $\phi_b M_{ny}$	kip-ft	58.1	87.4	50.0	75.2	41.6	62.6	32.4	48.7	45.4	68.2	39.2	58.9
$P_{ex}(K_xL_x)^2/10^4$	kip-in.^{2}	5020		4530		3920		3270		4320		3930	
$P_{ey}(K_yL_y)^2/10^4$	kip-in.^{2}	2130		1910		1650		1370		1350		1220	
r_{my}, in.		2.44		2.47		2.49		2.52		2.05		2.07	
r_{mi}/r_{my}		1.54		1.54		1.54		1.54		1.79		1.79	

ASD	LRFD
Ω_c = 2.00	ϕ_c = 0.75

Note: Heavy line indicates KL/r_{my} equal to or greater than 200.
Dashed line indicates the KL beyond which bare steel strength controls.

4

Table 4-13 (continued)
Available Strength in Axial Compression, kips

F_y = 46 ksi
f'_c = 4 ksi

COMPOSITE HSS10-HSS9

Concrete Filled Rectangular HSS

Shape		HSS10×6×				HSS9×7×							
		1/4		3/16		5/8		1/2		3/8		5/16	
t_{design}, in.		0.233		0.174		0.581		0.465		0.349		0.291	
Steel, lb/ft		24.1		18.4		59.3		48.9		37.7		31.8	
Design		P_n/Ω_c ASD	$\phi_c P_n$ LRFD	P_n/Ω_c ASD	$\phi_c P_n$ LRFD	P_n/Ω_c ASD	$\phi_c P_n$ LRFD	P_n/Ω_c ASD	$\phi_c P_n$ LRFD	P_n/Ω_c ASD	$\phi_c P_n$ LRFD	P_n/Ω_c ASD	$\phi_c P_n$ LRFD
Effective length, $(KL)_y$, with respect to weak axis (ft)	0	226	339	192	288	454	682	393	590	328	492	293	440
	6	206	309	174	261	431	647	374	561	312	468	279	418
	7	199	299	168	253	423	636	367	550	306	459	274	411
	8	192	287	162	243	414	623	359	539	300	450	268	402
	9	183	275	155	232	405	609	351	526	293	439	262	393
	10	175	262	147	221	395	593	341	512	285	428	255	383
	11	165	248	139	209	384	577	331	497	277	416	248	372
	12	156	234	131	196	372	559	320	481	268	402	240	360
	13	146	219	123	184	360	541	309	464	259	389	232	348
	14	136	205	114	171	347	521	297	446	250	374	223	335
	15	127	190	106	159	334	501	285	428	240	359	214	322
	16	117	175	97.4	146	320	481	273	410	230	344	205	308
	17	107	161	89.2	134	306	460	260	391	219	329	196	294
	18	98.2	147	81.3	122	292	439	248	372	209	313	187	280
	19	89.3	134	73.6	110	278	417	235	353	198	297	177	266
	20	80.6	121	66.5	99.7	263	396	222	334	188	282	168	252
	21	73.1	110	60.3	90.4	249	375	210	315	177	266	159	238
	22	66.6	99.9	54.9	82.4	235	353	198	298	167	251	150	224
	23	61.0	91.4	50.3	75.4	221	333	187	281	157	235	140	211
	24	56.0	84.0	46.2	69.2	208	312	176	264	147	220	132	197
	25	51.6	77.4	42.5	63.8	194	292	165	248	137	206	123	184
	26	47.7	71.6	39.3	59.0	182	273	154	232	128	192	114	172
	27	44.2	66.4	36.5	54.7	169	253	144	217	118	178	106	159
	28	41.1	61.7	33.9	50.9	157	236	134	201	110	165	98.7	148
	29	38.3	57.5	31.6	47.4	146	220	125	188	103	154	92.0	138
	30	35.8	53.7	29.5	44.3	137	205	117	175	95.9	144	86.0	129
	32	31.5	47.2	26.0	38.9	120	180	103	154	84.3	126	75.5	113
	34	27.9	41.8	23.0	34.5	106	160	90.8	137	74.7	112	66.9	100
	36					94.9	143	81.0	122	66.6	99.9	59.7	89.5
	38					85.1	128	72.7	109	59.8	89.7	53.6	80.4
	40					76.8	115	65.6	98.7	54.0	80.9	48.4	72.5
Properties													
M_{nx}/Ω_b $\phi_b M_{nx}$	kip-ft	55.3	83.1	43.6	65.5	117	176	99.7	150	79.9	120	69.1	104
M_{ny}/Ω_b $\phi_b M_{ny}$	kip-ft	32.7	49.1	25.4	38.1	97.5	147	82.8	124	66.1	99.4	57.1	85.9
$P_{ex}(K_xL_x)^2/10^4$	kip-in.^{2}	3430		2860		5690		5080		4330		3880	
$P_{ey}(K_yL_y)^2/10^4$	kip-in.^{2}	1060		873		3740		3320		2840		2540	
r_{my}, in.		2.10		2.13		2.68		2.73		2.78		2.81	
r_{mx}/r_{my}		1.80		1.81		1.23		1.24		1.23		1.24	

ASD	LRFD
$\Omega_c = 2.00$	$\phi_c = 0.75$

Note: Heavy line indicates KL/r_{my} equal to or greater than 200.
Dashed line indicates the KL beyond which bare steel strength controls.

Table 4-13 (continued)
Available Strength in Axial Compression, kips
Concrete Filled Rectangular HSS

F_y = 46 ksi
f'_c = 4 ksi

4
COMPOSITE HSS9

Shape		HSS9×5×											
		5/8		1/2		3/8		5/16		1/4		3/16	
t_{design}, in.		0.581		0.465		0.349		0.291		0.233		0.174	
Steel, lb/ft		50.8		42.1		32.6		27.6		22.4		17.1	
Design		P_n/Ω_c ASD	$\phi_c P_n$ LRFD	P_n/Ω_c ASD	$\phi_c P_n$ LRFD	P_n/Ω_c ASD	$\phi_c P_n$ LRFD	P_n/Ω_c ASD	$\phi_c P_n$ LRFD	P_n/Ω_c ASD	$\phi_c P_n$ LRFD	P_n/Ω_c ASD	$\phi_c P_n$ LRFD
Effective length, $(KL)_y$, with respect to weak axis (ft)	0	386	580	322	483	267	400	238	357	208	311	176	264
	6	351	527	292	439	243	364	216	325	189	284	160	240
	7	339	510	283	425	235	352	209	314	183	274	154	231
	8	326	490	272	409	225	338	201	302	176	264	148	222
	9	312	468	261	392	216	323	193	289	168	252	142	212
	10	297	446	249	374	205	308	183	275	160	240	135	202
	11	281	422	236	355	194	291	174	260	151	227	127	191
	12	264	397	223	335	183	274	163	245	143	214	120	180
	13	247	372	210	315	171	257	153	230	134	201	112	168
	14	230	346	196	294	159	239	143	214	125	187	104	156
	15	214	321	182	274	148	221	132	199	116	173	96.4	145
	16	197	296	169	253	136	204	122	183	107	160	88.8	133
	17	180	271	155	233	125	188	112	168	97.8	147	81.3	122
	18	165	247	142	214	115	173	102	154	89.3	134	74.1	111
	19	149	224	130	195	106	159	93.0	140	81.1	122	67.0	100
	20	135	202	117	177	96.5	145	83.9	126	73.1	110	60.5	90.7
	21	122	184	107	160	87.5	131	76.1	114	66.3	99.5	54.8	82.3
	22	111	167	97.1	146	79.7	120	69.4	104	60.4	90.7	50.0	75.0
	23	102	153	88.8	134	72.9	110	63.5	95.2	55.3	82.9	45.7	68.6
	24	93.5	141	81.6	123	67.0	101	58.3	87.4	50.8	76.2	42.0	63.0
	25	86.2	130	75.2	113	61.7	92.8	53.7	80.6	46.8	70.2	38.7	58.0
	26	79.7	120	69.5	104	57.1	85.8	49.7	74.5	43.3	64.9	35.8	53.7
	27	73.9	111	64.5	96.9	52.9	79.5	46.1	69.1	40.1	60.2	33.2	49.8
	28	68.7	103	59.9	90.1	49.2	74.0	42.8	64.2	37.3	56.0	30.8	46.3
	29	64.1	96.3	55.9	84.0	45.9	69.0	39.9	59.9	34.8	52.2	28.8	43.1
	30	59.9	90.0	52.2	78.5	42.9	64.4	37.3	56.0	32.5	48.8	26.9	40.3
	32	52.6	79.1	45.9	69.0	37.7	56.6	32.8	49.2	28.6	42.9	23.6	35.4
	34							29.0	43.6	25.3	38.0	20.9	31.4
Properties													
M_{nx}/Ω_b	$\phi_b M_{nx}$ kip-ft	92.8	140	79.4	119	64.1	96.4	55.7	83.7	46.7	70.2	36.6	55.0
M_{ny}/Ω_b	$\phi_b M_{ny}$ kip-ft	60.0	90.2	51.5	77.4	41.5	62.4	35.8	53.8	29.8	44.7	23.3	35.0
$P_{ex}(K_xL_x)^2/10^4$	kip-in.^{2}	4270		3840		3280		2960		2600		2160	
$P_{ey}(K_yL_y)^2/10^4$	kip-in.^{2}	1600		1430		1220		1100		961		794	
r_{mys}	in.	1.92		1.97		2.03		2.05		2.08		2.10	
r_{mx}/r_{my}		1.63		1.64		1.64		1.64		1.64		1.65	

ASD	LRFD
Ω_c = 2.00	ϕ_c = 0.75

Note: Heavy line indicates KL/r_{my} equal to or greater than 200.
Dashed line indicates the KL beyond which bare steel strength controls.

4

COMPOSITE HSS8

Table 4-13 (continued)
Available Strength in Axial Compression, kips
Concrete Filled Rectangular HSS

F_y = 46 ksi
f'_c = 4 ksi

Shape		HSS8×6×											
		5/8		1/2		3/8		5/16		1/4		3/16	
t_{design}, in.		0.581		0.465		0.349		0.291		0.233		0.174	
Steel, lb/ft		50.8		42.1		32.6		27.6		22.4		17.1	
Design		P_n/Ω_c ASD	$\phi_c P_n$ LRFD	P_n/Ω_c ASD	$\phi_c P_n$ LRFD	P_n/Ω_c ASD	$\phi_c P_n$ LRFD	P_n/Ω_c ASD	$\phi_c P_n$ LRFD	P_n/Ω_c ASD	$\phi_c P_n$ LRFD	P_n/Ω_c ASD	$\phi_c P_n$ LRFD
Effective length, $(KL)_y$, with respect to weak axis (ft)	0	366	580	327	491	272	408	243	364	213	319	181	271
	6	360	542	305	458	254	381	227	340	199	298	169	253
	7	352	529	298	446	248	372	221	332	194	291	164	247
	8	342	514	289	433	241	361	215	323	188	283	160	240
	9	331	498	280	419	233	350	208	313	182	274	155	232
	10	320	480	269	404	225	337	201	302	176	264	149	223
	11	307	462	259	388	216	324	193	290	169	254	143	214
	12	294	442	247	371	207	310	185	278	162	243	137	205
	13	281	422	236	354	197	296	177	265	155	232	130	195
	14	267	401	225	337	187	281	168	252	147	220	124	185
	15	253	380	213	320	177	266	159	239	139	208	117	175
	16	238	358	202	303	167	251	150	225	131	197	110	165
	17	224	337	190	285	157	236	141	212	123	185	103	155
	18	210	315	178	268	147	221	132	198	115	173	96.4	145
	19	196	294	167	251	137	206	123	185	107	161	89.7	135
	20	182	273	156	234	127	191	114	172	99.8	150	83.1	125
	21	168	253	144	217	118	177	106	159	92.4	139	76.8	115
	22	155	233	134	201	109	163	97.8	147	85.1	128	70.6	106
	23	142	214	123	185	100	150	89.6	134	78.0	117	64.6	96.9
	24	131	196	113	170	92.1	138	82.3	123	71.7	107	59.3	89.0
	25	120	181	104	157	84.9	128	75.9	114	66.0	99.1	54.7	82.0
	26	111	167	96.4	145	78.5	118	70.1	105	61.1	91.6	50.5	75.8
	27	103	155	89.4	134	72.8	109	65.0	97.6	56.6	84.9	46.9	70.3
	28	96.0	144	83.1	125	67.6	102	60.5	90.7	52.6	79.0	43.6	65.4
	29	89.5	135	77.5	116	63.1	94.8	56.4	84.6	49.1	73.6	40.6	60.9
	30	83.7	126	72.4	109	58.9	88.6	52.7	79.0	45.9	68.8	38.0	56.9
	32	73.5	111	63.6	95.7	51.8	77.8	46.3	69.5	40.3	60.5	33.4	50.1
	34	65.1	97.9	56.4	84.7	45.9	69.0	41.0	61.5	35.7	53.6	29.6	44.3
	36	58.1	87.3	50.3	75.6	40.9	61.5	36.6	54.9	31.8	47.8	26.4	39.5
	38			45.1	67.8	36.7	55.2	32.8	49.3	28.6	42.9	23.7	35.5
	40							29.6	44.5	25.8	38.7	21.4	32.0
Properties													
M_{nx}/Ω_b	$\phi_b M_{nx}$ kip-ft	87.0	131	74.5	112	60.0	90.2	52.0	78.1	43.4	65.3	34.2	51.4
M_{ny}/Ω_b	$\phi_b M_{ny}$ kip-ft	70.5	106	60.2	90.4	48.6	73.0	41.9	63.0	35.0	52.6	27.4	41.2
$P_{ex}(K_xL_x)^2/10^4$	kip-in.^{2}	3650		3270		2790		2520		2200		1830	
$P_{ey}(K_yL_y)^2/10^4$	kip-in.^{2}	2260		2020		1730		1560		1360		1120	
r_{my}, in.		2.27		2.32		2.38		2.40		2.43		2.46	
r_{mx}/r_{my}		1.27		1.27		1.27		1.27		1.27		1.28	

ASD	LRFD
$\Omega_c = 2.00$	$\phi_c = 0.75$

Note: Heavy line indicates KL/r_{my} equal to or greater than 200.
Dashed line indicates the KL beyond which bare steel strength controls.

Table 4-13 (continued)

F_y = 46 ksi
f'_c = 4 ksi

Available Strength in Axial Compression, kips

Concrete Filled Rectangular HSS

4

COMPOSITE HSS8

Shape		HSS8×4×											
		5/8		1/2		3/8		5/16		1/4		3/16	
t_{design}, in.		0.581		0.465		0.349		0.291		0.233		0.174	
Steel, lb/ft		42.3		35.2		27.5		23.3		19.0		14.5	
Design		P_n/Ω_c ASD	$\phi_c P_n$ LRFD	P_n/Ω_c ASD	$\phi_c P_n$ LRFD	P_n/Ω_c ASD	$\phi_c P_n$ LRFD	P_n/Ω_c ASD	$\phi_c P_n$ LRFD	P_n/Ω_c ASD	$\phi_c P_n$ LRFD	P_n/Ω_c ASD	$\phi_c P_n$ LRFD
Effective length, $(KL)_y$, with respect to weak axis (ft)	0	322	484	268	403	215	323	191	286	166	249	139	209
	6	277	416	232	349	185	278	165	247	143	215	120	180
	7	262	393	221	332	176	264	157	235	136	204	114	171
	8	246	369	208	313	165	248	147	221	128	192	107	161
	9	228	343	194	292	154	232	138	206	120	180	100	150
	10	211	317	180	271	144	216	127	191	111	166	92.7	139
	11	193	290	166	249	133	200	117	175	102	153	85.2	128
	12	175	263	151	227	122	183	107	160	93.0	139	77.6	116
	13	157	236	137	206	111	167	96.3	144	84.1	126	70.2	105
	14	140	211	123	185	100	151	86.7	130	75.5	113	62.9	94.3
	15	124	186	110	165	90.1	135	78.0	117	67.2	101	55.9	83.9
	16	109	163	96.6	145	80.1	120	69.6	105	59.2	88.8	49.3	73.9
	17	96.4	145	85.6	129	71.0	107	61.7	92.7	52.4	78.7	43.6	65.5
	18	85.9	129	76.4	115	63.3	95.1	55.0	82.7	46.8	70.2	38.9	58.4
	19	77.1	116	68.5	103	56.8	85.4	49.4	74.2	42.0	63.0	34.9	52.4
	20	69.6	105	61.9	93.0	51.3	77.1	44.6	67.0	37.9	56.8	31.5	47.3
	21	63.1	94.9	56.1	84.3	46.5	69.9	40.4	60.8	34.4	51.5	28.6	42.9
	22	57.5	86.5	51.1	76.8	42.4	63.7	36.8	55.4	31.3	47.0	26.1	39.1
	23	52.6	79.1	46.8	70.3	38.8	58.3	33.7	50.7	28.6	43.0	23.8	35.8
	24	48.3	72.7	43.0	64.6	35.6	53.5	31.0	46.5	26.3	39.5	21.9	32.8
	25	44.6	67.0	39.6	59.5	32.8	49.3	28.5	42.9	24.2	36.4	20.2	30.3
	26			36.6	55.0	30.3	45.6	26.4	39.6	22.4	33.6	18.7	28.0
	27							24.5	36.8	20.8	31.2	17.3	25.9
	28											16.1	24.1
Properties													
M_{nx}/Ω_b $\phi_b M_{nx}$	kip-ft	65.5	98.4	56.8	85.4	46.3	69.6	40.2	60.5	33.9	50.9	26.7	40.1
M_{ny}/Ω_b $\phi_b M_{ny}$	kip-ft	39.1	58.7	33.9	51.0	27.6	41.5	24.0	36.1	20.1	30.2	15.7	23.6
$P_{ex}(K_xL_x)^2/10^4$	kip-in.^{2}	2570		2330		2010		1820		1610		1350	
$P_{ey}(K_yL_y)^2/10^4$	kip-in.^{2}	800		727		628		568		498		414	
r_{my}, in.		1.51		1.56		1.61		1.63		1.66		1.69	
r_{mx}/r_{my}		1.79		1.79		1.79		1.79		1.80		1.81	

ASD	LRFD
Ω_c = 2.00	ϕ_c = 0.75

Note: Heavy line indicates KL/r_{my} equal to or greater than 200.
Dashed line indicates the KL beyond which bare steel strength controls.

4

COMPOSITE HSS7

Table 4-13 (continued)
Available Strength in Axial Compression, kips
Concrete Filled Rectangular HSS

F_y = 46 ksi
f'_c = 4 ksi

Shape		HSS7×5×											
		1/2		3/8		5/16		1/4		3/16		1/8[c,f]	
t_{design}, in.		0.465		0.349		0.291		0.233		0.174		0.116	
Steel, lb/ft		35.2		27.5		23.3		19.0		14.5		9.86	
Design		P_n/Ω_c ASD	$\phi_c P_n$ LRFD	P_n/Ω_c ASD	$\phi_c P_n$ LRFD	P_n/Ω_c ASD	$\phi_c P_n$ LRFD	P_n/Ω_c ASD	$\phi_c P_n$ LRFD	P_n/Ω_c ASD	$\phi_c P_n$ LRFD	P_n/Ω_c ASD	$\phi_c P_n$ LRFD
Effective length, $(KL)_y$, with respect to weak axis (ft)	0	268	403	220	330	196	294	171	256	144	216	117	175
	6	244	366	200	299	178	267	155	233	131	196	105	158
	7	236	354	193	289	172	257	150	225	126	189	102	152
	8	226	340	185	277	165	247	144	216	121	181	97.3	146
	9	216	325	176	264	157	236	137	206	115	173	92.7	139
	10	206	309	167	251	149	224	131	196	110	164	87.7	132
	11	195	292	158	237	141	212	123	185	103	155	82.6	124
	12	183	275	148	222	133	199	116	174	97.1	146	77.3	116
	13	171	257	138	208	124	186	108	163	90.7	136	72.0	108
	14	159	240	129	193	115	173	101	151	84.2	126	66.6	99.9
	15	148	222	119	179	107	160	93.3	140	77.8	117	61.3	91.9
	16	136	204	110	166	97.9	147	85.9	129	71.5	107	56.1	84.1
	17	125	187	101	153	89.6	134	78.6	118	65.3	97.9	51.0	76.5
	18	113	171	93.0	140	81.5	122	71.5	107	59.3	89.0	46.1	69.2
	19	103	154	84.8	127	73.5	110	64.6	97.0	53.5	80.2	41.4	62.1
	20	92.7	139	76.8	115	66.4	99.9	58.3	87.5	48.3	72.4	37.4	56.0
	21	84.1	126	69.6	105	60.3	90.6	52.9	79.4	43.8	65.7	33.9	50.8
	22	76.6	115	63.4	95.4	54.9	82.5	48.2	72.3	39.9	59.8	30.9	46.3
	23	70.1	105	58.0	87.2	50.2	75.5	44.1	66.2	36.5	54.7	28.3	42.4
	24	64.4	96.8	53.3	80.1	46.1	69.4	40.5	60.8	33.5	50.3	25.9	38.9
	25	59.3	89.2	49.1	73.8	42.5	63.9	37.3	56.0	30.9	46.3	23.9	35.9
	26	54.9	82.5	45.4	68.3	39.3	59.1	34.5	51.8	28.6	42.8	22.1	33.2
	27	50.9	76.5	42.1	63.3	36.5	54.8	32.0	48.0	26.5	39.7	20.5	30.8
	28	47.3	71.1	39.2	58.9	33.9	51.0	29.8	44.6	24.6	36.9	19.1	28.6
	29	44.1	66.3	36.5	54.9	31.6	47.5	27.7	41.6	23.0	34.4	17.8	26.7
	30	41.2	61.9	34.1	51.3	29.5	44.4	25.9	38.9	21.5	32.2	16.6	24.9
	32			30.0	45.1	26.0	39.0	22.8	34.2	18.9	28.3	14.6	21.9
	34									16.7	25.1	12.9	19.4
Properties													
M_{nx}/Ω_b kip-ft	$\phi_b M_{nx}$ kip-ft	53.0	79.7	43.1	64.8	37.4	56.3	31.5	47.3	24.8	37.2	17.6	26.5
M_{ny}/Ω_b kip-ft	$\phi_b M_{ny}$ kip-ft	41.4	62.3	33.5	50.4	29.2	43.9	24.4	36.7	19.2	28.8	13.5	20.2
$P_{ex}(K_x L_x)^2/10^4$ kip-in.^{2}		1960		1690		1530		1350		1120		872	
$P_{ey}(K_y L_y)^2/10^4$ kip-in.^{2}		1120		967		872		766		634		491	
r_{my}, in.		1.91		1.97		1.99		2.02		2.05		2.07	
r_{mx}/r_{my}		1.32		1.32		1.32		1.33		1.33		1.33	

ASD	LRFD
Ω_c = 2.00	ϕ_c = 0.75

[c] Shape is noncompact for compression with F_y = 46 ksi. [f] Shape is noncompact for flexure with F_y = 46 ksi.
Note: Heavy line indicates KL/r_{my} equal to or greater than 200.
Dashed line indicates the KL beyond which bare steel strength controls.

F_y = 46 ksi
f'_c = 4 ksi

Table 4-13 (continued)
Available Strength in Axial Compression, kips
Concrete Filled Rectangular HSS

4

COMPOSITE HSS7

Shape		HSS7×4×											
		1/2		3/8		5/16		1/4		3/16		1/8[c,f]	
t_{design}, in.		0.465		0.349		0.291		0.233		0.174		0.116	
Steel, lb/ft		31.8		24.9		21.2		17.3		13.3		9.01	
Design		P_n/Ω_c ASD	$\phi_c P_n$ LRFD	P_n/Ω_c ASD	$\phi_c P_n$ LRFD	P_n/Ω_c ASD	$\phi_c P_n$ LRFD	P_n/Ω_c ASD	$\phi_c P_n$ LRFD	P_n/Ω_c ASD	$\phi_c P_n$ LRFD	P_n/Ω_c ASD	$\phi_c P_n$ LRFD
Effective length, $(KL)_{yy}$, with respect to weak axis (ft)	0	243	365	193	290	172	258	149	223	125	187	99.9	150
	6	209	314	166	249	148	222	129	193	108	161	85.7	128
	7	198	298	157	236	140	210	122	183	102	153	81.0	122
	8	186	280	148	222	132	198	115	172	95.9	144	76.0	114
	9	174	261	138	208	123	184	107	161	89.4	134	70.7	106
	10	160	241	129	193	114	170	99.1	149	82.7	124	65.2	97.7
	11	147	221	119	178	104	156	90.9	136	75.9	114	59.6	89.4
	12	134	201	108	163	94.7	142	82.8	124	69.0	104	54.0	81.0
	13	121	181	98.4	148	85.7	129	74.8	112	62.3	93.5	48.5	72.8
	14	108	162	88.6	133	77.5	116	67.0	100	55.8	83.6	43.2	64.9
	15	95.6	144	79.2	119	69.5	104	59.5	89.3	49.5	74.2	38.1	57.2
	16	84.1	126	70.0	105	61.8	92.9	52.4	78.6	43.5	65.3	33.5	50.3
	17	74.5	112	62.0	93.2	54.8	82.3	46.4	69.6	38.6	57.9	29.7	44.5
	18	66.4	99.9	55.3	83.2	48.9	73.4	41.4	62.1	34.4	51.6	26.5	39.7
	19	59.6	89.6	49.7	74.6	43.8	65.9	37.2	55.8	30.9	46.3	23.8	35.7
	20	53.8	80.9	44.8	67.4	39.6	59.5	33.5	50.3	27.9	41.8	21.5	32.2
	21	48.8	73.4	40.7	61.1	35.9	53.9	30.4	45.6	25.3	37.9	19.5	29.2
	22	44.5	66.8	37.0	55.7	32.7	49.2	27.7	41.6	23.0	34.5	17.7	26.6
	23	40.7	61.2	33.9	50.9	29.9	45.0	25.4	38.0	21.1	31.6	16.2	24.3
	24	37.4	56.2	31.1	46.8	27.5	41.3	23.3	34.9	19.4	29.0	14.9	22.3
	25	34.4	51.8	28.7	43.1	25.3	38.1	21.5	32.2	17.8	26.8	13.7	20.6
	26			26.5	39.9	23.4	35.2	19.8	29.8	16.5	24.7	12.7	19.0
	27							18.4	27.6	15.3	22.9	11.8	17.7
	28											10.9	16.4
Properties													
M_{nx}/Ω_b $\phi_b M_{nx}$ kip-ft		45.3	68.1	37.0	55.7	32.5	48.9	27.3	41.0	21.6	32.5	15.4	23.2
M_{ny}/Ω_b $\phi_b M_{ny}$ kip-ft		29.9	44.9	24.5	36.8	21.4	32.2	18.0	27.0	14.1	21.2	9.93	14.9
$P_{ex}(K_xL_x)^2/10^4$ kip-in.^{2}		1620		1410		1280		1130		946		735	
$P_{ey}(K_yL_y)^2/10^4$ kip-in.^{2}		637		553		501		440		366		282	
r_{my}, in.		1.53		1.58		1.61		1.64		1.66		1.69	
r_{mx}/r_{my}		1.59		1.60		1.60		1.60		1.61		1.61	

ASD	LRFD
Ω_c = 2.00	ϕ_c = 0.75

[c] Shape is noncompact for compression with F_y = 46 ksi. [f] Shape is noncompact for flexure with F_y = 46 ksi.
Note: Heavy line indicates KL/r_{my} equal to or greater than 200.
Dashed line indicates the KL beyond which bare steel strength controls.

4

COMPOSITE HSS6

Table 4-13 (continued)
Available Strength in Axial Compression, kips
Concrete Filled Rectangular HSS

F_y = 46 ksi
f'_c = 4 ksi

Shape		HSS6×5× 1/2		3/8		5/16		1/4		3/16		1/8	
t_{design}, in.		0.465		0.349		0.291		0.233		0.174		0.116	
Steel, lb/ft		31.8		24.9		21.2		17.3		13.3		9.01	
Design		P_n/Ω_c ASD	$\phi_c P_n$ LRFD	P_n/Ω_c ASD	$\phi_c P_n$ LRFD	P_n/Ω_c ASD	$\phi_c P_n$ LRFD	P_n/Ω_c ASD	$\phi_c P_n$ LRFD	P_n/Ω_c ASD	$\phi_c P_n$ LRFD	P_n/Ω_c ASD	$\phi_c P_n$ LRFD
Effective length, $(KL)_y$, with respect to weak axis (ft)	0	243	365	197	295	175	263	152	228	128	192	103	155
	1	242	364	196	294	175	262	152	228	128	192	103	155
	2	240	361	195	292	173	260	151	226	127	190	102	153
	3	237	356	192	288	171	256	149	223	125	187	101	151
	4	232	349	188	282	167	251	146	219	123	184	98.6	148
	5	226	340	183	275	163	245	142	213	120	179	96.1	144
	6	220	330	178	267	158	238	138	207	116	174	93.1	140
	7	212	318	171	257	153	229	133	200	112	168	89.6	134
	8	203	305	164	246	147	220	128	192	107	161	85.8	129
	9	194	291	156	235	140	210	122	183	102	153	81.7	122
	10	184	276	148	222	133	199	116	174	97.0	146	77.3	116
	11	174	261	140	210	125	188	109	164	91.5	137	72.7	109
	12	163	245	131	196	117	176	103	154	85.8	129	68.0	102
	13	152	228	122	183	109	164	95.7	144	80.1	120	63.3	94.9
	14	141	212	113	170	101	152	88.9	133	74.3	111	58.5	87.7
	15	130	196	105	158	93.6	140	82.0	123	68.5	103	53.8	80.6
	16	119	179	96.7	145	85.8	129	75.3	113	62.9	94.3	49.1	73.7
	17	109	164	88.7	133	78.3	117	68.8	103	57.3	86.0	44.6	67.0
	18	98.9	149	80.9	122	71.0	107	62.5	93.8	52.0	78.0	40.3	60.5
	19	89.1	134	73.3	110	64.2	96.6	56.3	84.5	46.8	70.3	36.2	54.3
	20	80.4	121	66.2	99.5	58.0	87.2	50.8	76.3	42.3	63.4	32.7	49.0
	21	72.9	110	60.0	90.2	52.7	79.1	46.1	69.2	38.3	57.5	29.6	44.4
	22	66.4	99.9	54.7	82.2	48.0	72.1	42.0	63.0	34.9	52.4	27.0	40.5
	23	60.8	91.4	50.0	75.2	43.9	66.0	38.4	57.7	32.0	47.9	24.7	37.0
	24	55.8	83.9	46.0	69.1	40.3	60.6	35.3	53.0	29.4	44.0	22.7	34.0
	25	51.5	77.3	42.4	63.7	37.2	55.8	32.5	48.8	27.1	40.6	20.9	31.4
	26	47.6	71.5	39.2	58.9	34.3	51.6	30.1	45.1	25.0	37.5	19.3	29.0
	27	44.1	66.3	36.3	54.6	31.9	47.9	27.9	41.8	23.2	34.8	17.9	26.9
	28	41.0	61.6	33.8	50.8	29.6	44.5	25.9	38.9	21.6	32.3	16.7	25.0
	29	38.2	57.5	31.5	47.3	27.6	41.5	24.2	36.3	20.1	30.2	15.5	23.3
	30	35.7	53.7	29.4	44.2	25.8	38.8	22.6	33.9	18.8	28.2	14.5	21.8
Properties													
M_{nx}/Ω_b | $\phi_b M_{nx}$	kip-ft	41.4	62.2	33.8	50.8	29.5	44.3	24.8	37.3	19.6	29.5	13.9	21.0
M_{ny}/Ω_b | $\phi_b M_{ny}$	kip-ft	36.4	54.7	29.6	44.5	25.8	38.7	21.7	32.6	17.1	25.7	12.1	18.2
$P_{ex}(K_xL_x)^2/10^4$	kip-in.^{2}	1310		1130		1030		905		755		584	
$P_{ey}(K_yL_y)^2/10^4$	kip-in.^{2}	968		838		758		668		555		429	
r_{my}, in.		1.87		1.92		1.95		1.98		2.01		2.03	
r_{mx}/r_{my}		1.16		1.16		1.17		1.16		1.17		1.17	

ASD	LRFD
Ω_c = 2.00	ϕ_c = 0.75

Note: Dashed line indicates the KL beyond which bare steel strength controls.

Table 4-13 (continued)

$F_y = 46$ ksi
$f'_c = 4$ ksi

Available Strength in Axial Compression, kips

Concrete Filled Rectangular HSS

4

COMPOSITE HSS6

Shape		HSS6×4×											
		1/2		3/8		5/16		1/4		3/16		1/8	
t_{design}, in.		0.465		0.349		0.291		0.233		0.174		0.116	
Steel, lb/ft		28.4		22.4		19.1		15.6		12.0		8.16	
Design		P_n/Ω_c ASD	$\phi_c P_n$ LRFD	P_n/Ω_c ASD	$\phi_c P_n$ LRFD	P_n/Ω_c ASD	$\phi_c P_n$ LRFD	P_n/Ω_c ASD	$\phi_c P_n$ LRFD	P_n/Ω_c ASD	$\phi_c P_n$ LRFD	P_n/Ω_c ASD	$\phi_c P_n$ LRFD
Effective length, $(KL)_y$, with respect to weak axis (ft)	0	217	326	172	258	152	229	132	198	110	166	88.2	132
	1	216	325	171	256	152	228	132	197	110	165	87.8	132
	2	213	321	169	253	150	225	130	195	109	163	86.7	130
	3	209	314	165	248	147	220	127	191	106	160	84.8	127
	4	203	305	160	240	142	214	124	185	103	155	82.3	123
	5	195	293	154	231	137	206	119	178	99.6	149	79.2	119
	6	186	279	147	221	131	196	114	170	95.1	143	75.5	113
	7	176	264	140	210	124	186	108	161	90.1	135	71.4	107
	8	165	248	132	198	116	174	101	152	84.6	127	66.9	100
	9	153	230	123	185	108	162	94.1	141	78.8	118	62.1	93.2
	10	141	212	114	171	99.7	150	86.9	130	72.8	109	57.2	85.8
	11	129	194	105	157	91.2	137	79.6	119	66.7	100	52.2	78.4
	12	117	176	95.3	143	82.9	125	72.3	108	60.6	91.0	47.3	70.9
	13	105	158	86.1	129	75.2	113	65.1	97.7	54.6	82.0	42.4	63.7
	14	93.3	140	77.2	116	67.7	102	58.2	87.2	48.8	73.2	37.8	56.6
	15	82.3	124	68.7	103	60.5	91.0	51.5	77.3	43.3	64.9	33.2	49.9
	16	72.3	109	60.5	91.0	53.5	80.5	45.4	68.3	38.0	57.0	29.2	43.8
	17	64.0	96.2	53.6	80.6	47.4	71.3	40.3	60.5	33.7	50.5	25.9	38.8
	18	57.1	85.9	47.8	71.9	42.3	63.6	35.9	54.0	30.0	45.1	23.1	34.6
	19	51.3	77.1	42.9	64.5	38.0	57.1	32.2	48.4	27.0	40.4	20.7	31.1
	20	46.3	69.5	38.7	58.2	34.3	51.5	29.1	43.7	24.3	36.5	18.7	28.0
	21	42.0	63.1	35.1	52.8	31.1	46.7	26.4	39.7	22.1	33.1	17.0	25.4
	22	38.2	57.5	32.0	48.1	28.3	42.6	24.0	36.1	20.1	30.2	15.5	23.2
	23	35.0	52.6	29.3	44.0	25.9	38.9	22.0	33.1	18.4	27.6	14.1	21.2
	24	32.1	48.3	26.9	40.4	23.8	35.8	20.2	30.4	16.9	25.3	13.0	19.5
	25	29.6	44.5	24.8	37.3	21.9	33.0	18.6	28.0	15.6	23.4	12.0	17.9
	26					20.3	30.5	17.2	25.9	14.4	21.6	11.1	16.6
	27									13.4	20.0	10.3	15.4
Properties													
M_{nx}/Ω_b $\phi_b M_{nx}$	kip-ft	35.0	52.6	29.0	43.6	25.4	38.2	21.4	32.1	16.9	25.5	12.1	18.2
M_{ny}/Ω_b $\phi_b M_{ny}$	kip-ft	26.1	39.2	21.5	32.3	18.8	28.2	15.8	23.8	12.5	18.8	8.85	13.3
$P_{ex}(K_x L_x)^2/10^4$	kip-in.^{2}	1070		935		849		752		634		489	
$P_{ey}(K_y L_y)^2/10^4$	kip-in.^{2}	546		475		433		380		320		246	
r_{my}, in.		1.50		1.55		1.58		1.61		1.63		1.66	
r_{mx}/r_{my}		1.40		1.40		1.40		1.41		1.41		1.41	

ASD	LRFD
$\Omega_c = 2.00$	$\phi_c = 0.75$

Note: Heavy line indicates KL/r_{my} equal to or greater than 200.
Dashed line indicates the KL beyond which bare steel strength controls.

4

COMPOSITE HSS6

Table 4-13 (continued)
Available Strength in Axial Compression, kips
Concrete Filled Rectangular HSS

F_y = 46 ksi
f'_c = 4 ksi

Shape		HSS6×3×											
		1/2		3/8		5/16		1/4		3/16		1/8	
t_{design}, in.		0.465		0.349		0.291		0.233		0.174		0.116	
Steel, lb/ft		25.0		19.8		17.0		13.9		10.7		7.31	
Design		P_n/Ω_c ASD	$\phi_c P_n$ LRFD	P_n/Ω_c ASD	$\phi_c P_n$ LRFD	P_n/Ω_c ASD	$\phi_c P_n$ LRFD	P_n/Ω_c ASD	$\phi_c P_n$ LRFD	P_n/Ω_c ASD	$\phi_c P_n$ LRFD	P_n/Ω_c ASD	$\phi_c P_n$ LRFD
Effective length, $(KL)_y$, with respect to weak axis (ft)	0	191	288	151	227	130	195	112	168	92.8	139	73.1	110
	1	190	286	150	225	129	193	111	167	92.2	138	72.6	109
	2	186	279	147	221	126	189	109	163	90.2	135	71.0	107
	3	179	268	142	213	121	182	105	157	87.1	131	68.5	103
	4	169	254	135	203	116	174	99.8	150	82.8	124	65.1	97.6
	5	158	237	126	190	109	163	93.5	140	77.7	117	61.0	91.5
	6	145	218	117	176	101	151	86.3	129	71.9	108	56.3	84.4
	7	131	197	107	160	92.2	139	78.5	118	65.5	98.3	51.2	76.8
	8	117	176	96.0	144	83.2	125	70.4	106	58.9	88.3	45.9	68.9
	9	102	154	85.1	128	74.1	111	62.4	93.8	52.2	78.3	40.6	60.9
	10	88.4	133	74.4	112	65.0	97.8	55.2	82.9	45.6	68.4	35.4	53.0
	11	75.2	113	64.1	96.4	56.3	84.7	48.1	72.3	39.3	58.9	30.4	45.5
	12	63.2	95.0	54.4	81.7	48.0	72.2	41.4	62.3	33.3	49.9	25.7	38.5
	13	53.8	80.9	46.3	69.6	40.9	61.5	35.3	53.1	28.4	42.5	21.9	32.8
	14	46.4	69.8	39.9	60.0	35.3	53.0	30.4	45.7	24.4	36.7	18.8	28.3
	15	40.4	60.8	34.8	52.3	30.7	46.2	26.5	39.9	21.3	31.9	16.4	24.6
	16	35.5	53.4	30.6	46.0	27.0	40.6	23.3	35.0	18.7	28.1	14.4	21.6
	17	31.5	47.3	27.1	40.7	23.9	36.0	20.6	31.0	16.6	24.9	12.8	19.2
	18	28.1	42.2	24.2	36.3	21.4	32.1	18.4	27.7	14.8	22.2	11.4	17.1
	19			21.7	32.6	19.2	28.8	16.5	24.8	13.3	19.9	10.2	15.3
	20							14.9	22.4	12.0	18.0	9.23	13.9
	21											8.38	12.6
Properties													
M_{nx}/Ω_b $\phi_b M_{nx}$	kip-ft	28.8	43.3	23.9	36.0	21.1	31.7	17.9	26.9	14.2	21.4	10.2	15.4
M_{ny}/Ω_b $\phi_b M_{ny}$	kip-ft	17.1	25.7	14.3	21.5	12.6	18.9	10.6	16.0	8.45	12.7	6.00	9.01
$P_{ex}(K_x L_x)^2/10^4$	kip-in.^{2}	833		736		673		597		507		395	
$P_{ey}(K_y L_y)^2/10^4$	kip-in.^{2}	260		230		210		186		157		121	
r_{my}, in.		1.12		1.17		1.19		1.22		1.25		1.27	
r_{mx}/r_{my}		1.79		1.79		1.79		1.79		1.80		1.81	

ASD	LRFD
Ω_c = 2.00	ϕ_c = 0.75

Note: Heavy line indicates KL/r_{my} equal to or greater than 200.
Dashed line indicates the KL beyond which bare steel strength controls.

Table 4-13 (continued)
Available Strength in Axial Compression, kips
Concrete Filled Rectangular HSS

F_y = 46 ksi
f'_c = 4 ksi

4
COMPOSITE
HSS5

Shape		HSS5×4×											
		1/2		3/8		5/16		1/4		3/16		1/8	
t_{design}, in.		0.465		0.349		0.291		0.233		0.174		0.116	
Steel, lb/ft		25.0		19.8		17.0		13.9		10.7		7.31	
Design		P_n/Ω_c ASD	$\phi_c P_n$ LRFD	P_n/Ω_c ASD	$\phi_c P_n$ LRFD	P_n/Ω_c ASD	$\phi_c P_n$ LRFD	P_n/Ω_c ASD	$\phi_c P_n$ LRFD	P_n/Ω_c ASD	$\phi_c P_n$ LRFD	P_n/Ω_c ASD	$\phi_c P_n$ LRFD
Effective length, $(KL)_y$, with respect to weak axis (ft)	0	191	288	151	227	133	200	115	173	96.2	144	76.5	115
	1	191	286	150	226	133	199	115	172	95.8	144	76.2	114
	2	188	283	148	223	131	196	113	170	94.6	142	75.2	113
	3	184	276	145	218	128	192	111	167	92.6	139	73.5	110
	4	178	268	141	212	124	186	108	162	89.9	135	71.3	107
	5	171	257	136	204	119	179	104	155	86.5	130	68.5	103
	6	163	244	130	195	114	170	98.8	148	82.5	124	65.3	97.9
	7	153	230	123	185	107	161	93.4	140	78.1	117	61.7	92.5
	8	143	215	115	173	100	150	87.6	131	73.2	110	57.7	86.6
	9	132	199	107	162	93.1	140	81.4	122	68.1	102	53.6	80.3
	10	122	183	99.3	149	85.7	129	75.0	112	62.8	94.2	49.3	73.9
	11	110	166	90.9	137	78.6	118	68.5	103	57.4	86.2	44.9	67.4
	12	99.5	150	82.5	124	71.6	108	62.0	93.0	52.1	78.1	40.6	60.9
	13	88.8	133	74.3	112	64.6	97.2	55.6	83.4	46.8	70.2	36.3	54.5
	14	78.6	118	66.4	99.7	57.9	87.0	49.5	74.2	41.7	62.6	32.3	48.4
	15	68.7	103	58.7	88.3	51.4	77.3	43.7	65.7	36.8	55.2	28.3	42.5
	16	60.4	90.8	51.6	77.6	45.3	68.0	38.6	58.0	32.4	48.5	24.9	37.4
	17	53.5	80.4	45.7	68.7	40.1	60.3	34.2	51.4	28.7	43.0	22.1	33.1
	18	47.7	71.7	40.8	61.3	35.8	53.7	30.5	45.8	25.6	38.4	19.7	29.5
	19	42.8	64.4	36.6	55.0	32.1	48.2	27.4	41.1	22.9	34.4	17.7	26.5
	20	38.7	58.1	33.0	49.7	29.0	43.5	24.7	37.1	20.7	31.1	15.9	23.9
	21	35.1	52.7	30.0	45.0	26.3	39.5	22.4	33.7	18.8	28.2	14.5	21.7
	22	31.9	48.0	27.3	41.0	23.9	36.0	20.4	30.7	17.1	25.7	13.2	19.8
	23	29.2	43.9	25.0	37.5	21.9	32.9	18.7	28.1	15.7	23.5	12.1	18.1
	24	26.8	40.4	22.9	34.5	20.1	30.2	17.2	25.8	14.4	21.6	11.1	16.6
	25			21.1	31.8	18.5	27.9	15.8	23.8	13.3	19.9	10.2	15.3
	26							14.6	22.0	12.3	18.4	9.43	14.1
	27											8.75	13.1
Properties													
M_{nx}/Ω_b $\phi_b M_{nx}$ kip-ft		26.0	39.1	21.7	32.6	19.0	28.6	16.1	24.2	12.8	19.2	9.17	13.8
M_{ny}/Ω_b $\phi_b M_{ny}$ kip-ft		22.2	33.3	18.4	27.7	16.2	24.3	13.7	20.5	10.8	16.3	7.73	11.6
$P_{ex}(K_xL_x)^2/10^4$ kip-in.^{2}		658		579		527		468		397		306	
$P_{ey}(K_yL_y)^2/10^4$ kip-in.^{2}		456		400		363		322		272		209	
r_{my}, in.		1.46		1.52		1.54		1.57		1.60		1.62	
r_{mx}/r_{my}		1.20		1.20		1.20		1.21		1.21		1.21	

ASD	LRFD
Ω_c = 2.00	ϕ_c = 0.75

Note: Heavy line indicates KL/r_{my} equal to or greater than 200.
Dashed line indicates the KL beyond which bare steel strength controls.

4

COMPOSITE HSS5

Table 4-13 (continued)
Available Strength in Axial Compression, kips
Concrete Filled Rectangular HSS

F_y = 46 ksi
f'_c = 4 ksi

Shape		HSS5×3× 1/2		3/8		5/16		1/4		3/16		1/8	
t_{design}, in.		0.465		0.349		0.291		0.233		0.174		0.116	
Steel, lb/ft		21.6		17.3		14.8		12.2		9.42		6.46	
Design		P_n/Ω_c ASD	$\phi_c P_n$ LRFD	P_n/Ω_c ASD	$\phi_c P_n$ LRFD	P_n/Ω_c ASD	$\phi_c P_n$ LRFD	P_n/Ω_c ASD	$\phi_c P_n$ LRFD	P_n/Ω_c ASD	$\phi_c P_n$ LRFD	P_n/Ω_c ASD	$\phi_c P_n$ LRFD
Effective length, $(KL)_y$, with respect to weak axis (ft)	0	166	249	132	198	113	170	97.0	145	80.3	120	63.1	94.7
	1	164	247	131	196	112	169	96.2	144	79.7	120	62.7	94.0
	2	160	241	128	192	110	165	94.1	141	78.0	117	61.3	91.9
	3	154	232	123	185	106	159	90.7	136	75.2	113	59.1	88.6
	4	146	219	117	176	101	152	86.0	129	71.4	107	56.1	84.1
	5	135	203	109	164	94.6	142	80.4	121	66.9	100	52.5	78.7
	6	124	186	101	151	87.5	132	74.1	111	61.7	92.6	48.4	72.6
	7	111	167	91.4	137	79.8	120	67.3	101	56.1	84.2	43.9	65.9
	8	98.4	148	81.7	123	71.8	108	60.1	90.2	50.3	75.4	39.3	59.0
	9	85.7	129	72.0	108	63.7	95.7	53.3	80.2	44.4	66.6	34.7	52.0
	10	73.4	110	62.5	93.9	55.7	83.7	46.8	70.4	38.7	58.0	30.1	45.2
	11	61.7	92.7	53.4	80.3	48.0	72.1	40.6	61.0	33.2	49.8	25.8	38.7
	12	51.8	77.9	45.0	67.7	40.7	61.1	34.6	52.0	28.0	42.0	21.8	32.7
	13	44.2	66.4	38.4	57.7	34.7	52.1	29.5	44.3	23.9	35.8	18.5	27.8
	14	38.1	57.2	33.1	49.7	29.9	44.9	25.4	38.2	20.6	30.9	16.0	24.0
	15	33.2	49.9	28.8	43.3	26.0	39.1	22.1	33.3	17.9	26.9	13.9	20.9
	16	29.2	43.8	25.3	38.1	22.9	34.4	19.5	29.2	15.8	23.6	12.2	18.4
	17	25.8	38.8	22.4	33.7	20.3	30.5	17.2	25.9	14.0	20.9	10.8	16.3
	18	23.0	34.6	20.0	30.1	18.1	27.2	15.4	23.1	12.5	18.7	9.68	14.5
	19			18.0	27.0	16.2	24.4	13.8	20.7	11.2	16.8	8.68	13.0
	20									10.1	15.1	7.84	11.8
Properties													
M_{nx}/Ω_b $\phi_b M_{nx}$ kip-ft		20.9	31.5	17.7	26.5	15.6	23.5	13.3	19.9	10.6	16.0	7.65	11.5
M_{ny}/Ω_b $\phi_b M_{ny}$ kip-ft		14.3	21.5	12.1	18.2	10.7	16.1	9.11	13.7	7.26	10.9	5.19	7.80
$P_{ex}(K_x L_x)^2/10^4$ kip-in.^{2}		503		450		413		367		313		245	
$P_{ey}(K_y L_y)^2/10^4$ kip-in.^{2}		214		192		176		157		132		103	
r_{my}, in.		1.09		1.14		1.17		1.19		1.22		1.25	
r_{mx}/r_{my}		1.53		1.53		1.53		1.53		1.54		1.54	

ASD	LRFD
Ω_c = 2.00	ϕ_c = 0.75

Note: Heavy line indicates KL/r_{my} equal to or greater than 200.
Dashed line indicates the KL beyond which bare steel strength controls.

Table 4-13 (continued)

F_y = 46 ksi
f'_c = 4 ksi

Available Strength in Axial Compression, kips

Concrete Filled Rectangular HSS

4

COMPOSITE HSS5-HSS4

Shape		HSS5×2½×						HSS4×3×					
		1/4		3/16		1/8		3/8		5/16		1/4	
t_{design}, in.		0.233		0.174		0.116		0.349		0.291		0.233	
Steel, lb/ft		11.4		8.78		6.03		14.7		12.7		10.5	
Design		P_n/Ω_c ASD	$\phi_c P_n$ LRFD	P_n/Ω_c ASD	$\phi_c P_n$ LRFD	P_n/Ω_c ASD	$\phi_c P_n$ LRFD	P_n/Ω_c ASD	$\phi_c P_n$ LRFD	P_n/Ω_c ASD	$\phi_c P_n$ LRFD	P_n/Ω_c ASD	$\phi_c P_n$ LRFD
Effective length, $(KL)_y$, with respect to weak axis (ft)	0	87.8	132	72.4	109	56.3	84.5	113	169	97.0	146	82.1	123
	1	86.9	130	71.7	107	55.7	83.6	112	168	96.2	145	81.4	122
	2	84.1	126	69.5	104	54.0	81.1	109	164	94.1	141	79.5	119
	3	79.8	120	66.0	98.9	51.3	77.0	105	158	90.6	136	76.5	115
	4	74.0	111	61.3	92.0	47.7	71.6	99.3	149	85.9	129	72.4	109
	5	67.8	102	55.9	83.8	43.5	65.3	92.5	139	80.2	121	67.5	101
	6	61.0	91.7	49.9	74.8	38.9	58.3	84.9	128	73.8	111	61.9	93.0
	7	53.8	80.8	43.6	65.4	34.0	51.0	76.6	115	66.9	100	56.3	84.7
	8	46.5	69.8	37.3	56.0	29.1	43.7	68.1	102	59.7	89.7	50.6	76.0
	9	39.4	59.2	31.3	47.0	24.4	36.7	59.6	89.6	52.4	78.8	44.7	67.2
	10	32.7	49.2	26.2	39.3	20.1	30.1	51.3	77.1	45.4	68.2	39.0	58.6
	11	27.0	40.6	21.6	32.5	16.6	24.9	43.5	65.3	38.7	58.2	33.5	50.4
	12	22.7	34.1	18.2	27.3	13.9	20.9	36.5	54.9	32.6	49.0	28.4	42.7
	13	19.4	29.1	15.5	23.3	11.9	17.8	31.1	46.8	27.8	41.7	24.2	36.3
	14	16.7	25.1	13.4	20.1	10.2	15.4	26.8	40.3	23.9	36.0	20.9	31.3
	15	14.5	21.9	11.6	17.5	8.91	13.4	23.4	35.1	20.9	31.3	18.2	27.3
	16	12.8	19.2	10.2	15.4	7.84	11.8	20.5	30.9	18.3	27.5	16.0	24.0
	17			9.06	13.6	6.94	10.4	18.2	27.4	16.2	24.4	14.1	21.3
	18							16.2	24.4	14.5	21.8	12.6	19.0
	19											11.3	17.0
Properties													
M_{cx}/Ω_b $\phi_b M_{cx}$	kip-ft	11.9	17.8	9.50	14.3	6.89	10.4	12.2	18.4	10.9	16.3	9.30	14.0
M_{cy}/Ω_b $\phi_b M_{ny}$	kip-ft	7.06	10.6	5.65	8.50	4.06	6.10	9.91	14.9	8.82	13.3	7.54	11.3
$P_{ex}(K_xL_x)^2/10^4$	kip-in.^{2}	317		271		214		248		229		205	
$P_{ey}(K_yL_y)^2/10^4$	kip-in.^{2}	99.3		84.3		65.9		153		142		127	
r_{my}, in.		0.999		1.02		1.05		1.11		1.13		1.16	
r_{mx}/r_{my}		1.79		1.79		1.80		1.27		1.27		1.27	

ASD	LRFD
Ω_c = 2.00	ϕ_c = 0.75

Note: Heavy line indicates KL/r_{my} equal to or greater than 200.
Dashed line indicates the KL beyond which bare steel strength controls.

4

COMPOSITE HSS4

Table 4-13 (continued)
Available Strength in Axial Compression, kips
Concrete Filled Rectangular HSS

F_y = 46 ksi
f'_c = 4 ksi

Shape		HSS4×3×				HSS4×2½×							
		3/16		1/8		3/8		5/16		1/4		3/16	
t_{design}, in.		0.174		0.116		0.349		0.291		0.233		0.174	
Steel, lb/ft		8.15		5.61		13.4		11.6		9.66		7.51	
Design		P_n/Ω_c ASD	$\phi_c P_n$ LRFD	P_n/Ω_c ASD	$\phi_c P_n$ LRFD	P_n/Ω_c ASD	$\phi_c P_n$ LRFD	P_n/Ω_c ASD	$\phi_c P_n$ LRFD	P_n/Ω_c ASD	$\phi_c P_n$ LRFD	P_n/Ω_c ASD	$\phi_c P_n$ LRFD
Effective length, $(KL)_y$, with respect to weak axis (ft)	0	67.9	102	53.1	79.7	103	155	89.0	134	73.6	111	60.7	91.0
	1	67.4	101	52.7	79.1	102	153	88.0	132	72.8	109	60.0	90.1
	2	65.9	98.9	51.5	77.3	98.4	148	85.2	128	70.6	106	58.1	87.2
	3	63.5	95.2	49.6	74.4	93.0	140	80.7	121	67.1	101	55.1	82.7
	4	60.2	90.3	47.1	70.6	85.8	129	74.8	112	62.4	93.8	51.1	76.7
	5	56.2	84.3	44.0	65.9	77.5	116	67.9	102	56.9	85.6	46.4	69.6
	6	51.7	77.5	40.5	60.7	68.4	103	60.3	90.6	50.9	76.5	41.3	61.9
	7	46.8	70.3	36.7	55.0	58.9	88.6	52.4	78.8	44.5	67.0	35.9	53.9
	8	41.8	62.7	32.7	49.1	49.7	74.7	44.6	67.0	38.2	57.4	30.6	45.9
	9	36.7	55.1	28.8	43.2	40.9	61.5	37.1	55.7	32.1	48.3	25.9	38.9
	10	31.8	47.7	24.9	37.4	33.2	49.9	30.2	45.4	26.4	39.7	21.5	32.3
	11	27.1	40.7	21.3	31.9	27.4	41.2	25.0	37.6	21.8	32.8	17.7	26.7
	12	23.0	34.6	17.9	26.8	23.0	34.6	21.0	31.6	18.3	27.5	14.9	22.4
	13	19.6	29.4	15.2	22.9	19.6	29.5	17.9	26.9	15.6	23.5	12.7	19.1
	14	16.9	25.4	13.1	19.7	16.9	25.4	15.4	23.2	13.5	20.2	10.9	16.5
	15	14.7	22.1	11.4	17.2	14.7	22.2	13.4	20.2	11.7	17.6	9.54	14.3
	16	12.9	19.4	10.1	15.1					10.3	15.5	8.38	12.6
	17	11.5	17.2	8.91	13.4								
	18	10.2	15.4	7.95	11.9								
	19	9.17	13.8	7.14	10.7								
	20			6.44	9.66								
Properties													
M_{nx}/Ω_b $\phi_b M_{nx}$	kip-ft	7.47	11.2	5.42	8.15	10.7	16.0	9.54	14.3	8.22	12.4	6.62	10.0
M_{ny}/Ω_b $\phi_b M_{ny}$	kip-ft	6.04	9.08	4.35	6.54	7.54	11.3	6.76	10.2	5.82	8.75	4.69	7.05
$P_{ex}(K_xL_x)^2/10^4$	kip-in.^{2}	174		137		210		195		175		150	
$P_{ey}(K_yL_y)^2/10^4$	kip-in.^{2}	108		84.6		95.5		88.8		80.0		68.3	
r_{my}, in.		1.19		1.21		0.922		0.947		0.973		0.999	
r_{mx}/r_{my}		1.27		1.27		1.48		1.48		1.48		1.48	

ASD	LRFD
Ω_c = 2.00	ϕ_c = 0.75

Note: Heavy line indicates KL/r_{my} equal to or greater than 200.
Dashed line indicates the KL beyond which bare steel strength controls.

Table 4-13 (continued)

F_y = 46 ksi
f'_c = 4 ksi

Available Strength in Axial Compression, kips

Concrete Filled Rectangular HSS

4 COMPOSITE HSS4

Shape		HSS4×2½×		HSS4×2×									
		1/8		3/8		5/16		1/4		3/16		1/8	
t_{design}, in.		0.116		0.349		0.291		0.233		0.174		0.116	
Steel, lb/ft		5.18		12.2		10.6		8.81		6.87		4.75	
Design		P_n/Ω_c ASD	$\phi_c P_n$ LRFD	P_n/Ω_c ASD	$\phi_c P_n$ LRFD	P_n/Ω_c ASD	$\phi_c P_n$ LRFD	P_n/Ω_c ASD	$\phi_c P_n$ LRFD	P_n/Ω_c ASD	$\phi_c P_n$ LRFD	P_n/Ω_c ASD	$\phi_c P_n$ LRFD
Effective length, $(KL)_y$, with respect to weak axis (ft)	0	47.2	70.8	93.4	140	81.0	122	67.2	101	53.7	80.5	41.2	61.8
	1	46.7	70.0	91.7	138	79.6	120	66.1	99.4	52.8	79.2	40.6	60.8
	2	45.2	67.8	86.8	130	75.6	114	63.0	94.8	50.2	75.4	38.6	58.0
	3	42.9	64.3	79.2	119	69.5	104	58.2	87.5	46.3	69.4	35.7	53.5
	4	39.8	59.7	69.7	105	61.7	92.7	52.1	78.2	41.2	61.8	31.9	47.8
	5	36.2	54.3	59.2	89.0	52.9	79.5	45.1	67.8	35.8	53.8	27.6	41.4
	6	32.2	48.4	48.4	72.8	43.9	65.9	37.8	56.9	30.4	45.6	23.2	34.8
	7	28.1	42.1	38.2	57.5	35.1	52.8	30.7	46.2	25.0	37.5	18.8	28.2
	8	24.0	36.0	29.4	44.2	27.3	41.0	24.1	36.3	19.9	29.9	14.8	22.2
	9	20.0	30.0	23.2	34.9	21.5	32.4	19.1	28.7	15.7	23.7	11.7	17.5
	10	16.4	24.6	18.8	28.3	17.4	26.2	15.5	23.2	12.8	19.2	9.46	14.2
	11	13.5	20.3	15.5	23.4	14.4	21.7	12.8	19.2	10.5	15.8	7.82	11.7
	12	11.4	17.1	13.1	19.6	12.1	18.2	10.7	16.1	8.86	13.3	6.57	9.85
	13	9.69	14.5							7.55	11.3	5.60	8.39
	14	8.36	12.5										
	15	7.28	10.9										
	16	6.40	9.60										
	17	5.67	8.50										
Properties													
M_{nx}/Ω_b $\phi_b M_{nx}$	kip-ft	4.82	7.24	9.10	13.7	8.20	12.3	7.11	10.7	5.77	8.67	4.23	6.35
M_{ny}/Ω_b $\phi_b M_{ny}$	kip-ft	3.38	5.08	5.40	8.12	4.89	7.36	4.25	6.38	3.43	5.16	2.50	3.75
$P_{ex}(K_xL_x)^2/10^4$	kip-in.^{2}	119		172		161		146		125		100	
$P_{ey}(K_yL_y)^2/10^4$	kip-in.^{2}	53.8		53.3		50.2		45.6		39.1		31.1	
r_{my}, in.		1.03		0.729		0.754		0.779		0.804		0.830	
r_{mx}/r_{my}		1.49		1.80		1.79		1.79		1.79		1.79	

ASD	LRFD
Ω_c = 2.00	ϕ_c = 0.75

Note: Heavy line indicates KL/r_{my} equal to or greater than 200.
Dashed line indicates the KL beyond which bare steel strength controls.

5

COMPOSITE
HSS20-HSS16

Table 4-14
Available Strength in Axial Compression, kips
Concrete Filled Rectangular HSS

F_y = 46 ksi
f'_c = 5 ksi

Shape		HSS20×12×						HSS16×12×					
		5/8		1/2		3/8		5/8		1/2		3/8	
t_{design}, in.		0.581		0.465		0.349		0.581		0.465		0.349	
Steel, lb/ft		127		103		78.5		110		89.7		68.3	
Design		P_n/Ω_c	$\phi_c P_n$	P_n/Ω_c	$\phi_c P_n$	P_n/Ω_c	$\phi_c P_n$	P_n/Ω_c	$\phi_c P_n$	P_n/Ω_c	$\phi_c P_n$	P_n/Ω_c	$\phi_c P_n$
		ASD	LRFD	ASD	LRFD	ASD	LRFD	ASD	LRFD	ASD	LRFD	ASD	LRFD
Effective length, $(KL)_y$, with respect to weak axis (ft)	0	1240	1860	1100	1650	958	1440	1040	1560	920	1380	797	1200
	6	1220	1830	1080	1620	940	1410	1020	1530	904	1360	783	1170
	7	1210	1810	1070	1610	934	1400	1010	1520	898	1350	777	1170
	8	1200	1800	1070	1600	927	1390	1010	1510	891	1340	771	1160
	9	1190	1790	1060	1580	919	1380	998	1500	883	1330	765	1150
	10	1180	1770	1050	1570	910	1370	988	1480	875	1310	757	1140
	11	1170	1750	1040	1550	900	1350	978	1470	866	1300	749	1120
	12	1160	1730	1020	1540	890	1330	967	1450	856	1280	740	1110
	13	1140	1710	1010	1520	879	1320	955	1430	846	1270	731	1100
	14	1130	1690	999	1500	867	1300	943	1410	834	1250	720	1080
	15	1110	1670	985	1480	854	1280	929	1390	822	1230	710	1060
	16	1100	1640	970	1450	841	1260	915	1370	810	1210	698	1050
	17	1080	1620	954	1430	826	1240	901	1350	796	1190	687	1030
	18	1060	1590	938	1410	812	1220	885	1330	783	1170	674	1010
	19	1040	1560	921	1380	797	1190	869	1300	768	1150	661	992
	20	1020	1530	904	1360	781	1170	853	1280	754	1130	648	972
	21	1000	1500	886	1330	765	1150	836	1250	738	1110	635	952
	22	982	1470	868	1300	748	1120	818	1230	723	1080	621	931
	23	961	1440	849	1270	731	1100	800	1200	707	1060	606	910
	24	940	1410	829	1240	714	1070	782	1170	690	1040	592	888
	25	918	1380	810	1210	696	1040	764	1150	674	1010	577	865
	26	896	1340	790	1180	678	1020	745	1120	657	985	562	843
	27	874	1310	770	1150	660	990	726	1090	640	959	547	820
	28	851	1280	749	1120	642	963	706	1060	622	933	531	797
	29	828	1240	729	1090	624	935	687	1030	605	907	516	774
	30	805	1210	708	1060	605	908	667	1000	587	881	500	751
	32	759	1140	666	1000	568	852	628	941	552	828	469	704
	34	712	1070	625	937	531	796	588	882	517	775	438	657
	36	666	999	583	875	494	741	549	824	482	723	408	612
	38	621	931	543	814	458	688	511	766	448	672	378	566
	40	576	864	503	754	423	635	473	709	414	621	348	522
Properties													
M_{nx}/Ω_b $\phi_b M_{nx}$ kip-ft		599	901	500	752	394	593	423	636	353	530	279	419
M_{ny}/Ω_b $\phi_b M_{ny}$ kip-ft		405	609	335	503	263	395	339	509	283	425	222	334
$P_{ex}(K_xL_x)^2/10^4$ kip-in.^{2}		74500		64900		54700		41400		36300		30400	
$P_{ey}(K_yL_y)^2/10^4$ kip-in.^{2}		31200		27100		22600		25500		22200		18600	
r_{my}, in.		4.93		4.99		5.04		4.80		4.86		4.91	
r_{mx}/r_{my}		1.55		1.55		1.56		1.27		1.28		1.28	

ASD	LRFD
Ω_c = 2.00	ϕ_c = 0.75

Table 4-14 (continued)

F_y = 46 ksi
f'_c = 5 ksi

Available Strength in Axial Compression, kips

Concrete Filled Rectangular HSS

5

COMPOSITE
HSS16-HSS14

Shape		HSS16×12×		HSS16×8×								HSS14×10×	
		5/16		5/8		1/2		3/8		5/16		5/8	
t_{design}, in.		0.291		0.581		0.465		0.349		0.291		0.581	
Steel, lb/ft		57.4		93.3		76.1		58.1		48.9		93.3	
Design		P_n/Ω_c ASD	$\phi_c P_n$ LRFD	P_n/Ω_c ASD	$\phi_c P_n$ LRFD	P_n/Ω_c ASD	$\phi_c P_n$ LRFD	P_n/Ω_c ASD	$\phi_c P_n$ LRFD	P_n/Ω_c ASD	$\phi_c P_n$ LRFD	P_n/Ω_c ASD	$\phi_c P_n$ LRFD
Effective length, $(KL)_y$, with respect to weak axis (ft)	0	735	1100	806	1210	707	1060	605	908	551	827	832	1250
	6	721	1080	776	1160	681	1020	582	873	530	795	811	1220
	7	716	1070	765	1150	671	1010	574	861	522	783	803	1200
	8	710	1070	753	1130	661	991	565	848	514	771	795	1190
	9	704	1060	740	1110	649	974	555	832	504	757	785	1180
	10	697	1050	725	1090	636	954	544	816	494	741	775	1160
	11	689	1030	709	1060	622	934	532	797	483	724	763	1150
	12	681	1020	692	1040	608	911	519	778	471	706	751	1130
	13	672	1010	674	1010	592	888	505	757	458	687	738	1110
	14	662	993	655	983	575	863	490	736	445	667	724	1090
	15	652	978	636	953	558	837	475	713	431	646	709	1060
	16	641	962	615	923	540	810	460	690	416	625	694	1040
	17	630	945	594	891	522	783	444	666	402	602	678	1020
	18	618	928	573	859	503	754	428	641	387	580	661	992
	19	606	909	551	826	484	726	411	616	371	557	644	967
	20	594	891	528	793	464	697	394	591	356	534	627	940
	21	581	871	506	759	445	667	377	566	340	510	609	914
	22	568	852	484	725	425	638	360	540	324	487	591	886
	23	554	832	461	692	406	608	343	515	309	463	572	858
	24	541	811	439	658	386	579	326	490	293	440	554	830
	25	527	790	417	625	367	550	310	464	278	417	535	802
	26	513	769	395	592	348	521	293	440	263	394	516	774
	27	498	747	373	560	329	493	277	415	248	372	497	745
	28	484	726	352	528	310	465	261	392	234	351	478	717
	29	469	704	332	498	292	438	246	368	220	329	459	689
	30	455	682	313	471	275	412	230	345	205	308	440	661
	32	426	639	280	421	241	362	202	303	181	271	403	605
	34	397	595	248	373	214	321	179	269	160	240	368	551
	36	368	552	221	333	191	286	160	240	143	214	333	499
	38	340	510	199	299	171	257	143	215	128	192	299	449
	40	313	470	179	269	154	232	129	194	116	173	270	405
Properties													
M_{nx}/Ω_b $\phi_b M_{nx}$	kip-ft	239	359	327	492	275	413	219	329	189	284	304	457
M_{ny}/Ω_b $\phi_b M_{ny}$	kip-ft	190	285	193	291	162	243	127	191	109	164	236	355
$P_{ex}(K_xL_x)^2/10^4$	kip-in.^{2}	27300		29700		26400		22300		20000		25000	
$P_{ey}(K_yL_y)^2/10^4$	kip-in.^{2}	16600		9200		8110		6800		6070		14200	
r_{my}, in.		4.94		3.27		3.32		3.37		3.40		3.98	
r_{mx}/r_{my}		1.28		1.80		1.80		1.81		1.82		1.33	

Note: Dashed line indicates the KL beyond which bare steel strength controls.

ASD	LRFD
Ω_c = 2.00	ϕ_c = 0.75

5

COMPOSITE HSS14-HSS12

Table 4-14 (continued)
Available Strength in Axial Compression, kips
Concrete Filled Rectangular HSS

F_y = 46 ksi
f'_c = 5 ksi

Shape		HSS14×10×								HSS12×10×			
		1/2		3/8		5/16		1/4[c,t]		1/2		3/8	
t_{design}, in.		0.465		0.349		0.291		0.233		0.465		0.349	
Steel, lb/ft		76.1		58.1		48.9		39.4		69.3		53.0	
Design		P_n/Ω_c ASD	$\phi_c P_n$ LRFD	P_n/Ω_c ASD	$\phi_c P_n$ LRFD	P_n/Ω_c ASD	$\phi_c P_n$ LRFD	P_n/Ω_c ASD	$\phi_c P_n$ LRFD	P_n/Ω_c ASD	$\phi_c P_n$ LRFD	P_n/Ω_c ASD	$\phi_c P_n$ LRFD
Effective length, $(KL)_y$, with respect to weak axis (ft)	0	732	1100	631	946	577	865	522	784	650	975	559	838
	6	714	1070	614	922	561	842	508	762	633	950	544	817
	7	707	1060	609	913	556	834	503	755	627	941	539	809
	8	700	1050	602	903	550	825	497	746	621	931	533	800
	9	692	1040	595	892	543	814	491	736	613	920	527	790
	10	683	1020	587	880	535	803	484	726	605	907	519	779
	11	673	1010	578	867	527	790	476	714	596	894	511	767
	12	662	993	568	852	518	777	468	701	586	879	503	754
	13	650	975	558	837	508	763	459	688	576	863	494	740
	14	638	957	547	821	498	748	449	674	565	847	484	726
	15	625	938	536	804	488	732	439	659	553	829	474	711
	16	612	918	524	786	477	715	429	643	541	811	463	694
	17	598	897	511	767	465	698	418	627	528	792	452	678
	18	583	875	499	748	453	680	407	610	515	772	440	661
	19	568	852	485	728	441	661	395	593	501	752	429	643
	20	553	829	472	708	428	642	384	576	488	731	416	625
	21	537	806	458	687	415	623	372	558	473	710	404	606
	22	521	782	444	666	402	603	360	539	459	689	391	587
	23	505	757	430	645	389	583	347	521	444	667	379	568
	24	489	733	415	623	376	563	335	503	430	645	366	549
	25	472	708	401	601	362	543	323	484	415	622	353	529
	26	455	683	386	580	349	523	310	465	400	600	340	510
	27	439	658	372	558	335	503	298	447	385	577	327	490
	28	422	633	357	536	322	483	285	428	370	555	314	471
	29	406	608	343	514	308	463	273	410	355	533	301	452
	30	389	584	328	493	295	443	261	391	340	511	288	432
	32	357	535	300	450	269	404	237	356	311	467	263	395
	34	325	488	273	409	244	366	214	321	283	425	239	358
	36	295	442	246	370	220	329	192	288	256	384	215	323
	38	265	397	221	332	197	296	172	258	230	345	193	290
	40	239	359	200	299	178	267	155	233	208	311	174	261
Properties													
M_{nx}/Ω_b	$\phi_b M_{nx}$ kip-ft	255	383	202	304	174	262	144	217	201	302	160	240
M_{ny}/Ω_b	$\phi_b M_{ny}$ kip-ft	197	297	156	234	133	200	110	165	175	264	139	209
$P_{ex}(K_xL_x)^2/10^4$	kip-in.^{2}	22200		18600		16700		14600		14800		12500	
$P_{ey}(K_yL_y)^2/10^4$	kip-in.^{2}	12600		10500		9340		8160		10900		9160	
r_{my}, in.		4.04		4.09		4.12		4.14		3.96		4.01	
r_{mx}/r_{my}		1.33		1.33		1.34		1.34		1.17		1.17	

ASD	LRFD
$\Omega_c = 2.00$	$\varphi_c = 0.75$

[c] Shape is noncompact for compression with F_y = 46 ksi.
[t] Shape is noncompact for flexure with F_y = 46 ksi.

Table 4-14 (continued)

F_y = 46 ksi
f'_c = 5 ksi

Available Strength in Axial Compression, kips

Concrete Filled Rectangular HSS

5

COMPOSITE HSS12

Shape		HSS12×10×				HSS12×8×							
		5/16		1/4		5/8		1/2		3/8		1/4	
t_{design}, in.		0.291		0.233		0.581		0.465		0.349		0.233	
Steel, lb/ft		44.6		36.0		76.3		62.5		47.9		32.6	
Design		P_n/Ω_c	$\phi_c P_n$	P_n/Ω_c	$\phi_c P_n$	P_n/Ω_c	$\phi_c P_n$	P_n/Ω_c	$\phi_c P_n$	P_n/Ω_c	$\phi_c P_n$	P_n/Ω_c	$\phi_c P_n$
		ASD	LRFD	ASD	LRFD	ASD	LRFD	ASD	LRFD	ASD	LRFD	ASD	LRFD
Effective length, $(KL)_y$, with respect to weak axis (ft)	0	509	763	461	692	640	960	562	842	479	718	391	586
	6	495	743	449	673	615	922	540	810	460	690	375	562
	7	491	736	444	666	606	909	532	799	454	680	369	554
	8	485	728	439	658	596	894	524	786	446	669	363	544
	9	479	718	433	650	585	878	514	771	438	657	356	534
	10	472	708	427	640	573	860	504	755	429	643	348	522
	11	465	697	420	630	560	840	492	738	419	629	340	509
	12	457	685	412	619	546	819	480	720	409	613	331	496
	13	448	673	404	607	531	797	467	701	397	596	321	482
	14	439	659	396	594	516	773	454	680	386	579	311	467
	15	430	645	387	581	499	749	440	659	374	561	301	452
	16	420	630	378	567	483	724	425	637	361	542	291	436
	17	410	615	368	553	465	698	410	615	348	522	280	420
	18	399	599	359	538	448	672	395	592	335	503	269	403
	19	388	582	348	522	430	645	379	569	322	483	257	386
	20	377	566	338	507	412	618	363	545	308	462	246	369
	21	366	548	327	491	394	590	347	521	295	442	235	352
	22	354	531	317	475	375	563	332	497	281	421	223	335
	23	342	513	306	458	357	536	316	474	267	401	212	318
	24	330	496	295	442	339	509	300	450	254	381	201	301
	25	319	478	284	425	321	482	284	427	241	361	190	284
	26	307	460	273	409	304	456	269	404	227	341	179	268
	27	295	442	262	392	287	430	254	381	215	322	168	252
	28	283	424	251	376	270	406	239	359	202	303	158	237
	29	271	406	240	360	256	385	225	337	190	284	147	221
	30	259	389	229	344	242	363	210	316	177	266	138	207
	32	236	354	208	312	214	321	185	277	156	234	121	182
	34	214	321	188	281	189	285	164	246	138	207	107	161
	36	192	288	168	252	169	254	146	219	123	185	95.7	144
	38	173	259	151	226	152	228	131	197	111	166	85.9	129
	40	156	234	136	204	137	206	118	178	99.7	150	77.5	116
Properties													
M_{nx}/Ω_b $\phi_b M_{nx}$ kip-ft		137	206	114	171	205	308	173	261	138	208	99.2	149
M_{ny}/Ω_b $\phi_b M_{ny}$ kip-ft		119	179	98.4	148	151	228	128	192	101	152	71.9	108
$P_{ex}(K_xL_x)^2/10^4$ kip-in.^{2}		11200		9770		13900		12300		10500		8180	
$P_{ey}(K_yL_y)^2/10^4$ kip-in.^{2}		8180		7150		7000		6220		5240		4070	
r_{my}, in.		4.04		4.07		3.16		3.21		3.27		3.32	
r_{mx}/r_{my}		1.17		1.17		1.41		1.41		1.42		1.42	

ASD	LRFD
Ω_c = 2.00	ϕ_c = 0.75

Note: Dashed line indicates the KL beyond which bare steel strength controls.

5

COMPOSITE HSS12-HSS10

Table 4-14 (continued)
Available Strength in Axial Compression, kips
Concrete Filled Rectangular HSS

F_y = 46 ksi
f'_c = 5 ksi

Shape		HSS12×6×								HSS10×8×			
		5/8		1/2		3/8		1/4		5/8		1/2	
t_{design}, in.		0.581		0.465		0.349		0.233		0.581		0.465	
Steel, lb/ft		67.8		55.7		42.8		29.2		67.8		55.7	
Design		P_n/Ω_c ASD	$\phi_c P_n$ LRFD	P_n/Ω_c ASD	$\phi_c P_n$ LRFD	P_n/Ω_c ASD	$\phi_c P_n$ LRFD	P_n/Ω_c ASD	$\phi_c P_n$ LRFD	P_n/Ω_c ASD	$\phi_c P_n$ LRFD	P_n/Ω_c ASD	$\phi_c P_n$ LRFD
Effective length, $(KL)_{yy}$, with respect to weak axis (ft)	0	541	811	471	706	399	598	320	480	558	837	488	732
	6	505	757	440	660	373	559	299	448	535	803	468	703
	7	493	739	429	644	364	545	291	437	528	791	462	693
	8	479	718	417	626	354	530	283	425	519	778	454	681
	9	463	695	404	606	343	514	274	411	509	763	445	668
	10	447	670	390	585	331	496	264	396	498	747	436	654
	11	429	644	375	563	318	477	254	380	486	729	426	639
	12	411	616	359	539	305	457	243	364	473	710	415	623
	13	392	587	343	514	291	436	231	347	460	690	404	605
	14	372	558	326	489	276	414	219	329	446	669	391	587
	15	352	529	308	463	262	393	207	311	432	648	379	568
	16	334	502	291	437	247	371	195	293	417	625	366	549
	17	316	474	274	410	232	348	183	275	401	602	353	529
	18	297	447	256	384	218	326	171	257	386	578	339	509
	19	279	420	239	358	203	305	160	239	370	555	325	488
	20	261	393	222	333	189	283	148	222	354	530	311	467
	21	244	366	206	309	175	262	137	205	337	506	297	446
	22	227	341	192	288	161	242	126	189	321	482	283	425
	23	210	316	178	268	148	222	115	173	305	458	269	404
	24	194	291	165	248	136	204	106	159	289	434	256	383
	25	178	268	152	229	125	188	97.5	146	274	411	242	363
	26	165	248	141	211	116	174	90.2	135	259	390	228	343
	27	153	230	130	196	107	161	83.6	125	246	370	215	323
	28	142	214	121	182	99.9	150	77.7	117	233	349	202	304
	29	133	199	113	170	93.1	140	72.5	109	219	330	190	285
	30	124	186	106	159	87.0	130	67.7	102	207	311	177	266
	32	109	164	92.9	140	76.5	115	59.5	89.3	182	274	156	234
	34	96.4	145	82.2	124	67.7	102	52.7	79.1	161	242	138	207
	36	86.0	129	73.4	110	60.4	90.6	47.0	70.5	144	216	123	185
	38	77.2	116	65.8	99.0	54.2	81.3	42.2	63.3	129	194	111	166
	40			59.4	89.3	48.9	73.4	38.1	57.1	116	175	99.7	150
Properties													
M_{nx}/Ω_b $\phi_b M_{nx}$	kip-ft	171	256	145	218	116	175	84.0	126	154	231	131	196
M_{ny}/Ω_b $\phi_b M_{ny}$	kip-ft	101	152	85.7	129	68.4	103	48.7	73.2	130	196	110	166
$P_{ex}(K_x L_x)^2/10^4$	kip-in.^{2}	10900		9730		8350		6560		8590		7640	
$P_{ey}(K_y L_y)^2/10^4$	kip-in.^{2}	3410		3020		2570		2000		5900		5240	
r_{my}, in.		2.39		2.44		2.49		2.54		3.09		3.14	
r_{mx}/r_{my}		1.79		1.79		1.80		1.81		1.21		1.21	

ASD	LRFD
$\Omega_c = 2.00$	$\phi_c = 0.75$

Note: Heavy line indicates KL/r_{my} equal to or greater than 200.
Dashed line indicates the KL beyond which bare steel strength controls.

Table 4-14 (continued)

$F_y = 46$ ksi
$f'_c = 5$ ksi

Available Strength in Axial Compression, kips

Concrete Filled Rectangular HSS

5

COMPOSITE HSS10

Shape		HSS10×8×								HSS10×6×			
		3/8		5/16		1/4		3/16		5/8		1/2	
t_{design}, in.		0.349		0.291		0.233		0.174		0.581		0.465	
Steel, lb/ft		42.8		36.1		29.2		22.2		59.3		48.9	
Design		P_n/Ω_c ASD	$\phi_c P_n$ LRFD	P_n/Ω_c ASD	$\phi_c P_n$ LRFD	P_n/Ω_c ASD	$\phi_c P_n$ LRFD	P_n/Ω_c ASD	$\phi_c P_n$ LRFD	P_n/Ω_c ASD	$\phi_c P_n$ LRFD	P_n/Ω_c ASD	$\phi_c P_n$ LRFD
Effective length, $(KL)_y$, with respect to weak axis (ft)	0	416	623	376	565	337	506	296	444	467	701	408	612
	6	399	599	361	542	323	485	283	425	435	653	380	570
	7	393	590	356	534	318	478	279	418	424	636	371	556
	8	387	580	350	525	313	469	274	411	412	618	360	540
	9	379	569	343	515	307	460	268	402	398	597	349	523
	10	371	557	336	504	300	450	262	393	383	575	336	504
	11	363	544	328	492	293	439	255	383	368	552	323	484
	12	354	530	320	479	285	427	248	372	351	527	308	463
	13	344	516	311	466	277	415	241	361	335	504	294	441
	14	334	500	301	452	268	402	233	349	319	480	279	418
	15	323	484	292	437	259	389	225	337	303	456	264	395
	16	312	468	281	422	250	375	216	324	287	432	248	372
	17	301	451	271	407	240	361	208	312	271	407	233	349
	18	289	434	260	391	231	346	199	298	255	383	218	326
	19	277	416	250	375	221	331	190	285	239	359	203	304
	20	265	398	239	358	211	317	181	272	223	335	189	284
	21	254	380	228	342	201	302	172	258	207	311	176	265
	22	242	362	217	326	191	287	163	245	192	288	164	246
	23	230	345	206	310	182	272	155	232	177	266	152	228
	24	218	327	196	293	172	258	146	219	163	245	140	210
	25	206	310	185	278	162	243	137	206	150	225	129	194
	26	195	292	175	262	153	229	129	194	139	208	119	179
	27	184	275	164	247	144	215	121	181	129	193	110	166
	28	173	259	154	232	135	202	113	169	120	180	103	154
	29	162	243	145	217	126	189	105	158	111	168	95.7	144
	30	151	227	135	203	117	176	98.3	147	104	157	89.4	134
	32	133	200	119	178	103	155	86.4	130	91.5	138	78.6	118
	34	118	177	105	158	91.4	137	76.6	115	81.1	122	69.6	105
	36	105	158	93.8	141	81.6	122	68.3	102	72.3	109	62.1	93.3
	38	94.3	141	84.2	126	73.2	110	61.3	91.9	64.9	97.6	55.7	83.8
	40	85.1	128	76.0	114	66.1	99.1	55.3	83.0				
Properties													
M_{nx}/Ω_b $\phi_b M_{nx}$ kip-ft		104	157	89.9	135	74.9	113	58.5	87.9	126	190	108	162
M_{ny}/Ω_b $\phi_b M_{ny}$ kip-ft		88.0	132	75.8	114	62.9	94.6	48.8	73.4	86.2	130	73.4	110
$P_{ex}(K_x L_x)^2/10^4$ kip-in.^{2}		6520		5830		5080		4280		6700		5970	
$P_{ey}(K_y L_y)^2/10^4$ kip-in.^{2}		4470		3990		3470		2910		2840		2540	
r_{my}, in.		3.19		3.22		3.25		3.28		2.34		2.39	
r_{mx}/r_{my}		1.21		1.21		1.21		1.21		1.54		1.53	

ASD	LRFD
$\Omega_c = 2.00$	$\phi_c = 0.75$

Note: Heavy line indicates KL/r_{my} equal to or greater than 200.
Dashed line indicates the KL beyond which bare steel strength controls.

5

COMPOSITE HSS10

Table 4-14 (continued)
Available Strength in Axial Compression, kips
Concrete Filled Rectangular HSS

F_y = 46 ksi
f'_c = 5 ksi

Shape		HSS10×6×								HSS10×5×			
		3/8		5/16		1/4		3/16		3/8		5/16	
t_{design}, in.		0.349		0.291		0.233		0.174		0.349		0.291	
Steel, lb/ft		37.7		31.8		25.8		19.6		35.1		29.7	
Design		P_n/Ω_c	$\phi_c P_n$	P_n/Ω_c	$\phi_c P_n$	P_n/Ω_c	$\phi_c P_n$	P_n/Ω_c	$\phi_c P_n$	P_n/Ω_c	$\phi_c P_n$	P_n/Ω_c	$\phi_c P_n$
		ASD	LRFD	ASD	LRFD	ASD	LRFD	ASD	LRFD	ASD	LRFD	ASD	LRFD
Effective length, $(KL)_y$, with respect to weak axis (ft)	0	344	516	310	465	275	413	239	359	307	461	276	414
	6	321	481	289	434	257	385	222	334	279	418	251	376
	7	313	470	282	423	250	375	217	325	269	404	242	363
	8	304	456	274	411	243	364	210	315	259	388	233	349
	9	294	442	265	398	235	352	203	304	247	370	222	333
	10	284	426	256	384	226	340	195	293	235	352	211	317
	11	273	409	246	369	217	326	187	280	222	333	200	299
	12	261	392	235	353	208	312	178	268	208	313	188	282
	13	249	373	224	336	198	297	169	254	195	292	176	263
	14	236	354	213	319	188	281	160	241	181	272	163	245
	15	224	335	201	302	177	266	151	227	168	251	151	227
	16	211	316	190	285	167	250	142	213	154	231	139	208
	17	198	297	178	267	156	235	133	199	141	212	127	191
	18	185	278	167	250	146	219	123	185	128	192	116	174
	19	172	259	155	233	136	204	114	172	116	174	105	157
	20	160	240	144	216	126	189	106	159	106	159	94.5	142
	21	148	222	133	200	116	174	97.2	146	96.2	145	85.7	129
	22	136	204	123	184	107	160	88.8	133	87.6	132	78.1	117
	23	125	187	112	169	97.6	146	81.3	122	80.2	121	71.4	107
	24	115	172	103	155	89.6	134	74.6	112	73.6	111	65.6	98.4
	25	106	158	95.2	143	82.6	124	68.8	103	67.9	102	60.5	90.7
	26	97.6	146	88.0	132	76.4	115	63.6	95.4	62.7	94.3	55.9	83.9
	27	90.5	136	81.6	122	70.8	106	59.0	88.4	58.2	87.5	51.8	77.8
	28	84.2	126	75.9	114	65.9	98.8	54.8	82.2	54.1	81.3	48.2	72.3
	29	78.5	118	70.7	106	61.4	92.1	51.1	76.7	50.4	75.8	44.9	67.4
	30	73.3	110	66.1	99.1	57.4	86.1	47.8	71.6	47.1	70.8	42.0	63.0
	32	64.4	96.7	58.1	87.1	50.4	75.6	42.0	63.0	41.4	62.3	36.9	55.4
	34	57.1	85.6	51.5	77.2	44.7	67.0	37.2	55.8	36.7	55.2	32.7	49.0
	36	50.9	76.4	45.9	68.9	39.8	59.8	33.2	49.7				
	38	45.7	68.6	41.2	61.8	35.8	53.6	29.8	44.6				
	40	41.2	61.9	37.2	55.8	32.3	48.4	26.9	40.3				
Properties													
M_{nx}/Ω_b | $\phi_b M_{nx}$ kip-ft		86.6	130	75.0	113	62.8	94.4	49.3	74.1	77.5	116	67.4	101
M_{ny}/Ω_b | $\phi_b M_{ny}$ kip-ft		58.7	88.2	50.6	76.0	42.1	63.3	32.7	49.2	45.8	68.8	39.5	59.4
$P_{ex}(K_xL_x)^2/10^4$ kip-in.^{2}		5150		4670		4060		3410		4430		4040	
$P_{ey}(K_yL_y)^2/10^4$ kip-in.^{2}		2170		1950		1700		1410		1370		1240	
r_{my}, in.		2.44		2.47		2.49		2.52		2.05		2.07	
r_{mx}/r_{my}		1.54		1.55		1.55		1.56		1.80		1.81	

ASD	LRFD
Ω_c = 2.00	ϕ_c = 0.75

Note: Heavy line indicates KL/r_{my} equal to or greater than 200.
Dashed line indicates the KL beyond which bare steel strength controls.

Table 4-14 (continued)
Available Strength in Axial Compression, kips
Concrete Filled Rectangular HSS

F_y = 46 ksi
f'_c = 5 ksi

5

COMPOSITE
HSS10-HSS9

Shape		HSS10×5×				HSS9×7×							
		1/4		3/16		5/8		1/2		3/8		5/16	
t_{design}, in.		0.233		0.174		0.581		0.465		0.349		0.291	
Steel, lb/ft		24.1		18.4		59.3		48.9		37.7		31.8	
Design		P_n/Ω_c ASD	$\phi_c P_n$ LRFD	P_n/Ω_c ASD	$\phi_c P_n$ LRFD	P_n/Ω_c ASD	$\phi_c P_n$ LRFD	P_n/Ω_c ASD	$\phi_c P_n$ LRFD	P_n/Ω_c ASD	$\phi_c P_n$ LRFD	P_n/Ω_c ASD	$\phi_c P_n$ LRFD
Effective length, $(KL)_y$, with respect to weak axis (ft)	0	244	366	211	316	474	711	414	621	350	525	316	474
	6	222	332	190	286	449	673	393	589	332	498	300	450
	7	214	321	184	275	440	660	385	578	326	489	294	441
	8	205	308	176	264	430	645	377	565	319	478	288	432
	9	196	294	168	252	419	629	367	551	311	467	281	421
	10	186	279	159	238	408	611	357	536	303	454	273	410
	11	176	264	150	225	395	592	346	520	294	440	265	397
	12	165	248	140	211	381	572	335	502	284	426	256	384
	13	154	232	131	196	367	551	323	484	274	411	247	370
	14	144	215	121	182	353	529	310	465	263	395	237	356
	15	133	199	112	167	338	506	297	446	252	378	228	341
	16	122	183	102	153	322	483	284	426	241	362	217	326
	17	111	167	93.2	140	307	460	270	405	230	345	207	311
	18	101	152	84.4	127	292	439	257	385	218	328	197	295
	19	91.5	137	75.9	114	278	417	243	364	207	310	186	280
	20	82.6	124	68.5	103	263	396	229	344	196	293	176	264
	21	74.9	112	62.1	93.1	249	375	216	324	184	276	166	249
	22	68.3	102	56.6	84.9	235	353	203	304	173	260	156	234
	23	62.5	93.7	51.8	77.7	221	333	190	284	162	243	146	219
	24	57.4	86.0	47.5	71.3	208	312	177	265	151	227	136	204
	25	52.9	79.3	43.8	65.7	194	292	165	248	141	211	127	190
	26	48.9	73.3	40.5	60.8	182	273	154	232	131	196	117	176
	27	45.3	68.0	37.6	56.3	169	253	144	217	121	182	109	163
	28	42.1	63.2	34.9	52.4	157	236	134	201	113	169	101	152
	29	39.3	58.9	32.6	48.8	146	220	125	188	105	157	94.4	142
	30	36.7	55.1	30.4	45.6	137	205	117	175	98.1	147	88.2	132
	32	32.3	48.4	26.7	40.1	120	180	103	154	86.2	129	77.5	116
	34	28.6	42.9	23.7	35.5	106	160	90.8	137	76.3	115	68.7	103
	36					94.9	143	81.0	122	68.1	102	61.2	91.9
	38					85.1	128	72.7	109	61.1	91.7	55.0	82.5
	40					76.8	115	65.6	98.7	55.2	82.7	49.6	74.4
Properties													
M_{nx}/Ω_b	$\phi_b M_{nx}$ kip-ft	56.4	84.8	44.5	66.9	119	178	101	152	81.1	122	70.2	106
M_{ny}/Ω_b	$\phi_b M_{ny}$ kip-ft	33.0	49.6	25.6	38.5	98.4	148	83.7	126	66.9	101	57.8	86.9
$P_{ex}(K_xL_x)^2/10^4$	kip-in.^{2}	3550		2970		5780		5180		4440		4000	
$P_{ey}(K_yL_y)^2/10^4$	kip-in.^{2}	1090		899		3790		3380		2900		2610	
r_{my}, in.		2.10		2.13		2.68		2.73		2.78		2.81	
r_{mx}/r_{my}		1.80		1.82		1.23		1.24		1.24		1.24	

ASD	LRFD
Ω_c = 2.00	ϕ_c = 0.75

Note: Heavy line indicates KL/r_{my} equal to or greater than 200.
Dashed line indicates the KL beyond which bare steel strength controls.

5

COMPOSITE HSS9

Table 4-14 (continued)
Available Strength in Axial Compression, kips
Concrete Filled Rectangular HSS

F_y = 46 ksi
f'_c = 5 ksi

Shape		HSS9×5×											
		5/8		1/2		3/8		5/16		1/4		3/16	
t_{design}, in.		0.581		0.465		0.349		0.291		0.233		0.174	
Steel, lb/ft		50.8		42.1		32.6		27.6		22.4		17.1	
Design		P_n/Ω_c ASD	$\phi_c P_n$ LRFD	P_n/Ω_c ASD	$\phi_c P_n$ LRFD	P_n/Ω_c ASD	$\phi_c P_n$ LRFD	P_n/Ω_c ASD	$\phi_c P_n$ LRFD	P_n/Ω_c ASD	$\phi_c P_n$ LRFD	P_n/Ω_c ASD	$\phi_c P_n$ LRFD
Effective length, $(KL)_y$, with respect to weak axis (ft)	0	386	580	336	504	282	423	253	380	224	336	193	289
	6	351	527	304	456	256	383	230	345	203	304	174	261
	7	339	510	293	440	247	370	222	333	196	294	168	252
	8	326	490	281	422	237	355	213	319	188	282	161	241
	9	312	468	268	402	226	339	203	305	179	269	153	230
	10	297	446	254	381	215	322	193	290	170	255	145	218
	11	281	422	240	359	203	304	182	274	161	241	137	205
	12	264	397	225	337	190	285	171	257	151	226	128	192
	13	247	372	210	315	178	266	160	240	141	211	119	179
	14	230	346	196	294	165	247	149	223	131	196	111	166
	15	214	321	182	274	152	229	138	206	121	181	102	153
	16	197	296	169	253	140	210	126	190	111	166	93.2	140
	17	180	271	155	233	128	192	116	173	101	152	84.8	127
	18	165	247	142	214	116	174	105	158	92.1	138	76.8	115
	19	149	224	130	195	106	159	94.9	142	83.0	125	69.0	104
	20	135	202	117	177	96.5	145	85.6	128	74.9	112	62.3	93.4
	21	122	184	107	160	87.5	131	77.6	116	68.0	102	56.6	84.7
	22	111	167	97.1	146	79.7	120	70.8	106	61.9	92.9	51.5	77.2
	23	102	153	88.8	134	72.9	110	64.7	97.1	56.7	85.0	47.1	70.6
	24	93.5	141	81.6	123	67.0	101	59.5	89.2	52.0	78.0	43.2	64.9
	25	86.2	130	75.2	113	61.7	92.8	54.8	82.2	47.9	71.9	39.9	59.8
	26	79.7	120	69.5	104	57.1	85.8	50.7	76.0	44.3	66.5	36.9	55.3
	27	73.9	111	64.5	96.9	52.9	79.5	47.0	70.5	41.1	61.7	34.2	51.3
	28	68.7	103	59.9	90.1	49.2	74.0	43.7	65.5	38.2	57.3	31.8	47.7
	29	64.1	96.3	55.9	84.0	45.9	69.0	40.7	61.1	35.6	53.5	29.6	44.4
	30	59.9	90.0	52.2	78.5	42.9	64.4	38.0	57.1	33.3	49.9	27.7	41.5
	32	52.6	79.1	45.9	69.0	37.7	56.6	33.4	50.2	29.3	43.9	24.3	36.5
	34							29.6	44.4	25.9	38.9	21.5	32.3
Properties													
M_{nx}/Ω_b $\phi_b M_{nx}$ kip-ft		93.8	141	80.4	121	65.1	97.9	56.6	85.1	47.6	71.5	37.4	56.2
M_{ny}/Ω_b $\phi_b M_{ny}$ kip-ft		60.4	90.8	51.9	78.0	41.9	62.9	36.1	54.3	30.1	45.2	23.5	35.4
$P_{ex}(K_xL_x)^2/10^4$ kip-in.^{2}		4330		3900		3350		3040		2680		2240	
$P_{ey}(K_yL_y)^2/10^4$ kip-in.^{2}		1610		1450		1240		1120		984		818	
r_{my}, in.		1.92		1.97		2.03		2.05		2.08		2.10	
r_{mx}/r_{my}		1.64		1.64		1.64		1.65		1.65		1.65	

ASD	LRFD
Ω_c = 2.00	ϕ_c = 0.75

Note: Heavy line indicates KL/r_{my} equal to or greater than 200.
Dashed line indicates the KL beyond which bare steel strength controls.

Table 4-14 (continued)

F_y = 46 ksi
f'_c = 5 ksi

Available Strength in Axial Compression, kips

Concrete Filled Rectangular HSS

5

COMPOSITE HSS8

Shape		HSS8×6×											
		5/8		1/2		3/8		5/16		1/4		3/16	
t_{design}, in.		0.581		0.465		0.349		0.291		0.233		0.174	
Steel, lb/ft		50.8		42.1		32.6		27.6		22.4		17.1	
Design		P_n/Ω_c ASD	$\phi_c P_n$ LRFD	P_n/Ω_c ASD	$\phi_c P_n$ LRFD	P_n/Ω_c ASD	$\phi_c P_n$ LRFD	P_n/Ω_c ASD	$\phi_c P_n$ LRFD	P_n/Ω_c ASD	$\phi_c P_n$ LRFD	P_n/Ω_c ASD	$\phi_c P_n$ LRFD
Effective length, $(KL)_y$, with respect to weak axis (ft)	0	392	588	343	514	288	433	260	390	230	346	199	299
	6	364	545	319	478	269	403	242	363	214	322	185	277
	7	354	531	310	466	262	393	236	354	209	313	180	270
	8	343	515	301	452	254	381	229	344	203	304	175	262
	9	331	498	291	437	246	369	222	332	196	294	168	253
	10	320	480	280	420	237	355	213	320	189	283	162	243
	11	307	462	269	403	227	341	205	307	181	272	155	233
	12	294	442	256	385	217	325	196	294	173	259	148	222
	13	281	422	244	366	207	310	186	280	164	247	140	211
	14	267	401	231	346	196	294	177	265	156	234	133	199
	15	253	380	218	327	185	277	167	250	147	221	125	188
	16	238	358	205	307	174	261	157	236	138	207	117	176
	17	224	337	191	287	163	244	147	221	129	194	109	164
	18	210	315	178	268	152	228	137	206	121	181	102	153
	19	196	294	167	251	141	212	128	192	112	168	94.3	141
	20	182	273	156	234	131	196	118	177	104	156	87.6	130
	21	168	253	144	217	121	181	109	164	95.6	143	79.9	120
	22	155	233	134	201	111	166	100	150	87.6	131	72.9	109
	23	142	214	123	185	101	152	91.7	138	80.2	120	66.7	100
	24	131	196	113	170	93.1	140	84.2	126	73.6	110	61.3	91.9
	25	120	181	104	157	85.8	129	77.6	116	67.8	102	56.5	84.7
	26	111	167	96.4	145	79.3	119	71.8	108	62.7	94.1	52.2	78.3
	27	103	155	89.4	134	73.5	110	66.5	99.8	58.2	87.3	48.4	72.6
	28	96.0	144	83.1	125	68.4	103	61.9	92.8	54.1	81.1	45.0	67.5
	29	89.5	135	77.5	116	63.7	95.6	57.7	86.5	50.4	75.6	42.0	63.0
	30	83.7	126	72.4	109	59.6	89.3	53.9	80.8	47.1	70.7	39.2	58.8
	32	73.5	111	63.6	95.7	52.3	78.5	47.4	71.1	41.4	62.1	34.5	51.7
	34	65.1	97.9	56.4	84.7	46.4	69.6	42.0	62.9	36.7	55.0	30.5	45.8
	36	58.1	87.3	50.3	75.6	41.4	62.0	37.4	56.1	32.7	49.1	27.2	40.9
	38			45.1	67.8	37.1	55.7	33.6	50.4	29.4	44.0	24.4	36.7
	40							30.3	45.5	26.5	39.8	22.1	33.1
Properties													
M_{ox}/Ω_b	$\phi_b M_{nx}$ kip-ft	87.9	132	75.4	113	60.9	91.5	52.8	79.4	44.2	66.4	34.9	52.4
M_{oy}/Ω_b	$\phi_b M_{ny}$ kip-ft	71.1	107	60.7	91.3	49.1	73.8	42.4	63.8	35.4	53.2	27.8	41.7
$P_{ex}(K_xL_x)^2/10^4$	kip-in.^{2}	3700		3320		2860		2590		2270		1900	
$P_{ey}(K_yL_y)^2/10^4$	kip-in.^{2}	2290		2050		1760		1590		1390		1160	
r_{my}, in.		2.27		2.32		2.38		2.40		2.43		2.46	
r_{mx}/r_{my}		1.27		1.27		1.27		1.28		1.28		1.28	

ASD	LRFD
Ω_c = 2.00	ϕ_c = 0.75

Note: Heavy line indicates KL/r_{my} equal to or greater than 200.
Dashed line indicates the KL beyond which bare steel strength controls.

5

COMPOSITE HSS8

Table 4-14 (continued)
Available Strength in Axial Compression, kips
Concrete Filled Rectangular HSS

F_y = 46 ksi
f'_c = 5 ksi

Shape		HSS8×4×											
		5/8		1/2		3/8		5/16		1/4		3/16	
t_{design}, in.		0.581		0.465		0.349		0.291		0.233		0.174	
Steel, lb/ft		42.3		35.2		27.5		23.3		19.0		14.5	
Design		P_n/Ω_c ASD	$\phi_c P_n$ LRFD	P_n/Ω_c ASD	$\phi_c P_n$ LRFD	P_n/Ω_c ASD	$\phi_c P_n$ LRFD	P_n/Ω_c ASD	$\phi_c P_n$ LRFD	P_n/Ω_c ASD	$\phi_c P_n$ LRFD	P_n/Ω_c ASD	$\phi_c P_n$ LRFD
Effective length, $(KL)_{yr}$, with respect to weak axis (ft)	0	322	484	270	405	225	338	202	302	177	265	151	226
	6	277	416	232	349	193	290	173	260	152	228	129	194
	7	262	393	221	332	183	274	164	246	144	216	122	183
	8	246	369	208	313	171	257	154	231	135	203	115	172
	9	228	343	194	292	159	239	143	215	126	189	107	160
	10	211	317	180	271	147	221	132	198	116	174	98.3	147
	11	193	290	166	249	134	202	121	182	106	160	89.9	135
	12	175	263	151	227	122	183	110	165	96.6	145	81.4	122
	13	157	236	137	206	111	167	99.0	148	87.0	131	73.2	110
	14	140	211	123	185	100	151	88.3	133	77.7	117	65.2	97.8
	15	124	186	110	165	90.1	135	78.1	117	68.7	103	57.5	86.2
	16	109	163	96.6	145	80.1	120	69.6	105	60.4	90.6	50.5	75.8
	17	96.4	145	85.6	129	71.0	107	61.7	92.7	53.5	80.3	44.8	67.1
	18	85.9	129	76.4	115	63.3	95.1	55.0	82.7	47.7	71.6	39.9	59.9
	19	77.1	116	68.5	103	56.8	85.4	49.4	74.2	42.8	64.2	35.8	53.8
	20	69.6	105	61.9	93.0	51.3	77.1	44.6	67.0	38.7	58.0	32.3	48.5
	21	63.1	94.9	56.1	84.3	46.5	69.9	40.4	60.8	35.1	52.6	29.3	44.0
	22	57.5	86.5	51.1	76.8	42.4	63.7	36.8	55.4	31.9	47.9	26.7	40.1
	23	52.6	79.1	46.8	70.3	38.8	58.3	33.7	50.7	29.2	43.8	24.5	36.7
	24	48.3	72.7	43.0	64.6	35.6	53.5	31.0	46.5	26.8	40.3	22.5	33.7
	25	44.6	67.0	39.6	59.5	32.8	49.3	28.5	42.9	24.7	37.1	20.7	31.0
	26			36.6	55.0	30.3	45.6	26.4	39.6	22.9	34.3	19.1	28.7
	27							24.5	36.8	21.2	31.8	17.7	26.6
	28											16.5	24.8
Properties													
M_{nx}/Ω_b $\phi_b M_{nx}$	kip-ft	66.1	99.3	57.5	86.4	47.0	70.6	40.9	61.4	34.5	51.8	27.2	40.9
M_{ny}/Ω_b $\phi_b M_{ny}$	kip-ft	39.3	59.0	34.1	51.3	27.8	41.8	24.2	36.4	20.3	30.4	15.9	23.9
$P_{ex}(K_xL_x)^2/10^4$	kip-in.^{2}	2600		2360		2050		1860		1650		1390	
$P_{ey}(K_yL_y)^2/10^4$	kip-in.^{2}	805		733		636		577		508		425	
r_{my}, in.		1.51		1.56		1.61		1.63		1.66		1.69	
r_{mx}/r_{my}		1.80		1.79		1.80		1.80		1.80		1.81	

ASD	LRFD
$\Omega_c = 2.00$	$\phi_c = 0.75$

Note: Heavy line indicates KL/r_{my} equal to or greater than 200.
Dashed line indicates the KL beyond which bare steel strength controls.

F_y = 46 ksi
f'_c = 5 ksi

Table 4-14 (continued)
Available Strength in Axial Compression, kips
Concrete Filled Rectangular HSS

5
COMPOSITE HSS7

Shape		HSS7×5×											
		1/2		3/8		5/16		1/4		3/16		1/8[c,f]	
t_{design}, in.		0.465		0.349		0.291		0.233		0.174		0.116	
Steel, lb/ft		35.2		27.5		23.3		19.0		14.5		9.86	
Design		P_n/Ω_c ASD	$\phi_c P_n$ LRFD	P_n/Ω_c ASD	$\phi_c P_n$ LRFD	P_n/Ω_c ASD	$\phi_c P_n$ LRFD	P_n/Ω_c ASD	$\phi_c P_n$ LRFD	P_n/Ω_c ASD	$\phi_c P_n$ LRFD	P_n/Ω_c ASD	$\phi_c P_n$ LRFD
Effective length, $(KL)_y$, with respect to weak axis (ft)	0	276	414	232	348	208	312	183	275	157	236	131	196
	6	248	373	209	314	188	282	166	249	142	212	117	175
	7	239	359	202	302	181	272	160	240	136	205	112	168
	8	229	343	193	290	174	260	153	230	131	196	107	161
	9	218	327	184	276	165	248	146	219	124	186	102	153
	10	206	309	174	262	157	235	138	208	118	176	95.9	144
	11	195	292	164	246	148	222	130	196	111	166	89.9	135
	12	183	275	154	231	139	208	122	183	104	155	83.7	126
	13	171	257	143	215	129	194	114	171	96.3	144	77.5	116
	14	159	240	133	199	120	179	106	158	89.0	134	71.3	107
	15	148	222	122	183	110	165	97.3	146	81.8	123	65.2	97.8
	16	136	204	112	168	101	152	89.2	134	74.8	112	59.2	88.8
	17	125	187	102	153	92.0	138	81.3	122	67.9	102	53.5	80.2
	18	113	171	93.0	140	83.4	125	73.6	110	61.4	92.1	47.9	71.8
	19	103	154	84.8	127	76.0	112	66.2	99.3	55.1	82.6	43.0	64.5
	20	92.7	139	76.8	115	67.7	101	59.7	89.6	49.7	74.5	38.8	58.2
	21	84.1	126	69.6	105	61.4	92.0	54.2	81.3	45.1	67.6	35.2	52.8
	22	76.6	115	63.4	95.4	55.9	83.9	49.4	74.1	41.1	61.6	32.1	48.1
	23	70.1	105	58.0	87.2	51.2	76.7	45.2	67.8	37.6	56.4	29.3	44.0
	24	64.4	96.8	53.3	80.1	47.0	70.5	41.5	62.2	34.5	51.8	26.9	40.4
	25	59.3	89.2	49.1	73.8	43.3	64.9	38.2	57.4	31.8	47.7	24.8	37.2
	26	54.9	82.5	45.4	68.3	40.0	60.0	35.4	53.0	29.4	44.1	23.0	34.4
	27	50.9	76.5	42.1	63.3	37.1	55.7	32.8	49.2	27.3	40.9	21.3	31.9
	28	47.3	71.1	39.2	58.9	34.5	51.8	30.5	45.7	25.4	38.0	19.8	29.7
	29	44.1	66.3	36.5	54.9	32.2	48.3	28.4	42.6	23.6	35.5	18.5	27.7
	30	41.2	61.9	34.1	51.3	30.1	45.1	26.6	39.8	22.1	33.1	17.2	25.9
	32			30.0	45.1	26.4	39.6	23.3	35.0	19.4	29.1	15.2	22.7
	34									17.2	25.8	13.4	20.1
Properties													
M_{nx}/Ω_b $\phi_b M_{nx}$ kip-ft		53.6	80.5	43.7	65.7	38.0	57.1	32.0	48.1	25.2	37.9	18.0	27.0
M_{ny}/Ω_b $\phi_b M_{ny}$ kip-ft		41.8	62.8	33.9	50.9	29.5	44.4	24.7	37.2	19.4	29.2	13.6	20.5
$P_{ex}(K_xL_x)^2/10^4$ kip-in.^{2}		1990		1720		1570		1390		1160		910	
$P_{ey}(K_yL_y)^2/10^4$ kip-in.^{2}		1130		982		889		785		653		510	
r_{my}, in.		1.91		1.97		1.99		2.02		2.05		2.07	
r_{mx}/r_{my}		1.33		1.32		1.33		1.33		1.33		1.34	

ASD	LRFD
Ω_c = 2.00	ϕ_c = 0.75

[c] Shape is noncompact for compression with F_y = 46 ksi. [f] Shape is noncompact for flexure with F_y = 46 ksi.
Note: Heavy line indicates KL/r_{my} equal to or greater than 200.
Dashed line indicates the KL beyond which bare steel strength controls.

5

COMPOSITE HSS7

Table 4-14 (continued)

Available Strength in Axial Compression, kips

F_y = 46 ksi

f'_c = 5 ksi

Concrete Filled Rectangular HSS

Shape		HSS7×4×											
		1/2		3/8		5/16		1/4		3/16		1/8[c,f]	
t_{design}, in.		0.465		0.349		0.291		0.233		0.174		0.116	
Steel, lb/ft		31.8		24.9		21.2		17.3		13.3		9.01	
Design		P_n/Ω_c ASD	$\phi_c P_n$ LRFD	P_n/Ω_c ASD	$\phi_c P_n$ LRFD	P_n/Ω_c ASD	$\phi_c P_n$ LRFD	P_n/Ω_c ASD	$\phi_c P_n$ LRFD	P_n/Ω_c ASD	$\phi_c P_n$ LRFD	P_n/Ω_c ASD	$\phi_c P_n$ LRFD
Effective length, $(KL)_{yy}$, with respect to weak axis (ft)	0	243	365	202	303	181	272	159	238	135	203	111	166
	6	209	314	173	259	155	233	136	204	116	173	93.9	141
	7	198	298	163	245	147	220	129	193	109	164	88.5	133
	8	186	280	153	230	138	206	121	181	102	153	82.6	124
	9	174	261	142	213	128	192	112	169	95.1	143	76.4	115
	10	160	241	131	196	118	177	104	155	87.5	131	70.0	105
	11	147	221	119	179	108	162	94.8	142	79.9	120	63.6	95.4
	12	134	201	108	163	97.6	146	85.9	129	72.3	108	57.2	85.9
	13	121	181	98.4	148	87.6	131	77.3	116	64.9	97.4	51.0	76.6
	14	108	162	88.6	133	78.1	117	68.9	103	57.7	86.6	45.1	67.7
	15	95.6	144	79.2	119	69.5	104	60.8	91.2	50.8	76.2	39.4	59.1
	16	84.1	126	70.0	105	61.8	92.9	53.4	80.2	44.7	67.0	34.7	52.0
	17	74.5	112	62.0	93.2	54.8	82.3	47.3	71.0	39.6	59.3	30.7	46.0
	18	66.4	99.9	55.3	83.2	48.9	73.4	42.2	63.3	35.3	52.9	27.4	41.1
	19	59.6	89.6	49.7	74.6	43.8	65.9	37.9	56.8	31.7	47.5	24.6	36.9
	20	53.8	80.9	44.8	67.4	39.6	59.5	34.2	51.3	28.6	42.9	22.2	33.3
	21	48.8	73.4	40.7	61.1	35.9	53.9	31.0	46.5	25.9	38.9	20.1	30.2
	22	44.5	66.8	37.0	55.7	32.7	49.2	28.3	42.4	23.6	35.4	18.3	27.5
	23	40.7	61.2	33.9	50.9	29.9	45.0	25.9	38.8	21.6	32.4	16.8	25.2
	24	37.4	56.2	31.1	46.8	27.5	41.3	23.7	35.6	19.8	29.8	15.4	23.1
	25	34.4	51.8	28.7	43.1	25.3	38.1	21.9	32.8	18.3	27.4	14.2	21.3
	26			26.5	39.9	23.4	35.2	20.2	30.4	16.9	25.4	13.1	19.7
	27							18.8	28.1	15.7	23.5	12.2	18.3
	28											11.3	17.0
Properties													
M_{nx}/Ω_b $\phi_b M_{nx}$	kip-ft	45.8	68.8	37.5	56.4	33.0	49.6	27.8	41.7	22.0	33.1	15.8	23.7
M_{ny}/Ω_b $\phi_b M_{ny}$	kip-ft	30.1	45.2	24.7	37.1	21.6	32.4	18.1	27.3	14.3	21.4	10.0	15.1
$P_{ex}(K_x L_x)^2/10^4$	kip-in.^{2}	1640		1430		1300		1160		977		766	
$P_{ey}(K_y L_y)^2/10^4$	kip-in.^{2}	642		560		508		449		375		291	
r_{my}, in.		1.53		1.58		1.61		1.64		1.66		1.69	
r_{mx}/r_{my}		1.60		1.60		1.60		1.61		1.61		1.62	

ASD	LRFD
Ω_c = 2.00	ϕ_c = 0.75

[c] Shape is noncompact for compression with F_y = 46 ksi. [f] Shape is noncompact for flexure with F_y = 46 ksi.

Note: Heavy line indicates KL/r_{my} equal to or greater than 200.

Dashed line indicates the KL beyond which bare steel strength controls.

Table 4-14 (continued)

F_y = 46 ksi
f'_c = 5 ksi

Available Strength in Axial Compression, kips

Concrete Filled Rectangular HSS

5

COMPOSITE HSS6

Shape		HSS6×5×											
		1/2		3/8		5/16		1/4		3/16		1/8	
t_{design}, in.		0.465		0.349		0.291		0.233		0.174		0.116	
Steel, lb/ft		31.8		24.9		21.2		17.3		13.3		9.01	
Design		P_n/Ω_c	$\phi_c P_n$	P_n/Ω_c	$\phi_c P_n$	P_n/Ω_c	$\phi_c P_n$	P_n/Ω_c	$\phi_c P_n$	P_n/Ω_c	$\phi_c P_n$	P_n/Ω_c	$\phi_c P_n$
		ASD	LRFD	ASD	LRFD	ASD	LRFD	ASD	LRFD	ASD	LRFD	ASD	LRFD
Effective length, $(KL)_{ey}$ with respect to weak axis (ft)	0	246	369	206	310	185	278	163	244	139	209	115	172
	1	245	368	206	309	185	277	162	244	139	208	115	172
	2	243	365	204	306	183	275	161	242	138	207	114	170
	3	239	359	201	302	180	271	159	238	136	204	112	168
	4	234	352	197	296	177	265	156	233	133	199	109	164
	5	228	342	192	288	172	259	152	227	129	194	106	160
	6	221	331	186	279	167	250	147	220	125	188	103	154
	7	212	318	179	268	161	241	142	212	121	181	98.7	148
	8	203	305	171	257	154	231	136	203	115	173	94.2	141
	9	194	291	163	244	147	220	129	194	110	165	89.4	134
	10	184	276	154	231	139	208	122	183	104	156	84.2	126
	11	174	261	145	217	131	196	115	173	97.6	146	78.9	118
	12	163	245	135	203	122	183	108	162	91.2	137	73.4	110
	13	152	228	125	189	114	170	100	150	84.8	127	67.9	102
	14	141	212	116	175	105	158	92.8	139	78.3	117	62.5	93.7
	15	130	196	107	160	96.6	145	85.4	128	71.9	108	57.1	85.6
	16	119	179	97.6	146	88.4	133	78.1	117	65.7	98.5	51.8	77.7
	17	109	164	88.7	133	80.3	120	71.0	107	59.6	89.4	46.8	70.1
	18	98.9	149	80.9	122	72.6	109	64.2	96.3	53.7	80.6	41.8	62.8
	19	89.1	134	73.3	110	65.1	97.7	57.7	86.5	48.2	72.3	37.6	56.3
	20	80.4	121	66.2	99.5	58.8	88.2	52.0	78.1	43.5	65.3	33.9	50.8
	21	72.9	110	60.0	90.2	53.3	80.0	47.2	70.8	39.5	59.2	30.7	46.1
	22	66.4	99.9	54.7	82.2	48.6	72.9	43.0	64.5	36.0	53.9	28.0	42.0
	23	60.8	91.4	50.0	75.2	44.4	66.7	39.3	59.0	32.9	49.3	25.6	38.4
	24	55.8	83.9	46.0	69.1	40.8	61.2	36.1	54.2	30.2	45.3	23.5	35.3
	25	51.5	77.3	42.4	63.7	37.6	56.4	33.3	50.0	27.8	41.8	21.7	32.5
	26	47.6	71.5	39.2	58.9	34.8	52.2	30.8	46.2	25.7	38.6	20.1	30.1
	27	44.1	66.3	36.3	54.6	32.3	48.4	28.6	42.8	23.9	35.8	18.6	27.9
	28	41.0	61.6	33.8	50.8	30.0	45.0	26.5	39.8	22.2	33.3	17.3	25.9
	29	38.2	57.5	31.5	47.3	28.0	41.9	24.7	37.1	20.7	31.0	16.1	24.2
	30	35.7	53.7	29.4	44.2	26.1	39.2	23.1	34.7	19.3	29.0	15.1	22.6
Properties													
M_{nx}/Ω_b $\phi_b M_{nx}$	kip-ft	41.8	62.8	34.2	51.4	29.9	44.9	25.2	37.9	19.9	30.0	14.2	21.3
M_{ny}/Ω_b $\phi_b M_{ny}$	kip-ft	36.7	55.1	29.9	45.0	26.1	39.2	22.0	33.0	17.3	26.0	12.2	18.4
$P_{ex}(K_x L_x)^2/10^4$	kip-in.^{2}	1330		1150		1050		928		779		608	
$P_{ey}(K_y L_y)^2/10^4$	kip-in.^{2}	978		850		772		684		571		445	
r_{my}, in.		1.87		1.92		1.95		1.98		2.01		2.03	
r_{mx}/r_{my}		1.17		1.16		1.17		1.16		1.17		1.17	

ASD	LRFD
$\Omega_c = 2.00$	$\phi_c = 0.75$

Note: Dashed line indicates the KL beyond which bare steel strength controls.

5

COMPOSITE HSS6

Table 4-14 (continued)
Available Strength in Axial Compression, kips
Concrete Filled Rectangular HSS

F_y = 46 ksi
f'_c = 5 ksi

Shape		HSS6×4×											
		1/2		3/8		5/16		1/4		3/16		1/8	
t_{design}, in.		0.465		0.349		0.291		0.233		0.174		0.116	
Steel, lb/ft		28.4		22.4		19.1		15.6		12.0		8.16	
Design		P_n/Ω_c ASD	$\phi_c P_n$ LRFD	P_n/Ω_c ASD	$\phi_c P_n$ LRFD	P_n/Ω_c ASD	$\phi_c P_n$ LRFD	P_n/Ω_c ASD	$\phi_c P_n$ LRFD	P_n/Ω_c ASD	$\phi_c P_n$ LRFD	P_n/Ω_c ASD	$\phi_c P_n$ LRFD
Effective length, $(KL)_y$, with respect to weak axis (ft)	0	217	326	179	269	160	240	140	211	119	179	97.4	146
	1	216	325	178	267	159	239	140	210	119	178	97.0	145
	2	213	321	176	264	157	236	138	207	117	176	95.7	143
	3	209	314	172	258	154	231	135	202	115	172	93.5	140
	4	203	305	167	250	149	224	131	196	111	167	90.5	136
	5	195	293	160	240	144	215	126	189	107	160	86.8	130
	6	186	279	152	229	137	205	120	180	102	153	82.5	124
	7	176	264	144	216	129	194	113	170	96.2	144	77.7	117
	8	165	248	134	202	121	181	106	159	90.1	135	72.5	109
	9	153	230	124	187	112	168	98.6	148	83.6	125	67.0	100
	10	141	212	114	171	103	155	90.7	136	76.9	115	61.3	92.0
	11	129	194	105	157	94.1	141	82.8	124	70.1	105	55.7	83.5
	12	117	176	95.3	143	85.1	128	74.9	112	63.4	95.1	50.0	75.1
	13	105	158	86.1	129	76.3	114	67.1	101	56.8	85.2	44.6	66.9
	14	93.3	140	77.2	116	67.7	102	59.7	89.5	50.5	75.7	39.3	59.0
	15	82.3	124	68.7	103	60.5	91.0	52.5	78.7	44.4	66.5	34.3	51.5
	16	72.3	109	60.5	91.0	53.5	80.5	46.1	69.2	39.0	58.5	30.2	45.3
	17	64.0	96.2	53.6	80.6	47.4	71.3	40.9	61.3	34.5	51.8	26.7	40.1
	18	57.1	85.9	47.8	71.9	42.3	63.6	36.4	54.7	30.8	46.2	23.9	35.8
	19	51.3	77.1	42.9	64.5	38.0	57.1	32.7	49.1	27.6	41.5	21.4	32.1
	20	46.3	69.5	38.7	58.2	34.3	51.5	29.5	44.3	25.0	37.4	19.3	29.0
	21	42.0	63.1	35.1	52.8	31.1	46.7	26.8	40.2	22.6	33.9	17.5	26.3
	22	38.2	57.5	32.0	48.1	28.3	42.6	24.4	36.6	20.6	30.9	16.0	24.0
	23	35.0	52.6	29.3	44.0	25.9	38.9	22.3	33.5	18.9	28.3	14.6	21.9
	24	32.1	48.3	26.9	40.4	23.8	35.8	20.5	30.8	17.3	26.0	13.4	20.1
	25	29.6	44.5	24.8	37.3	21.9	33.0	18.9	28.3	16.0	24.0	12.4	18.5
	26					20.3	30.5	17.5	26.2	14.8	22.1	11.4	17.1
	27									13.7	20.5	10.6	15.9
Properties													
M_{nx}/Ω_b $\phi_b M_{nx}$ kip-ft		35.3	53.1	29.3	44.1	25.7	38.7	21.7	32.6	17.2	25.9	12.4	18.6
M_{ny}/Ω_b $\phi_b M_{ny}$ kip-ft		26.3	39.5	21.7	32.5	19.0	28.5	16.0	24.0	12.6	19.0	8.95	13.5
$P_{ex}(K_x L_x)^2/10^4$ kip-in.^{2}		1080		950		865		770		654		509	
$P_{ey}(K_y L_y)^2/10^4$ kip-in.^{2}		551		481		440		388		328		254	
r_{my}, in.		1.50		1.55		1.58		1.61		1.63		1.66	
r_{mx}/r_{my}		1.40		1.41		1.40		1.41		1.41		1.42	

ASD	LRFD
Ω_c = 2.00	ϕ_c = 0.75

Note: Heavy line indicates KL/r_{my} equal to or greater than 200.
Dashed line indicates the KL beyond which bare steel strength controls.

Table 4-14 (continued)

F_y = 46 ksi
f'_c = 5 ksi

Available Strength in Axial Compression, kips

Concrete Filled Rectangular HSS

5

COMPOSITE HSS6

Shape		HSS6×3×											
		1/2		3/8		5/16		1/4		3/16		1/8	
t_{design}, in.		0.465		0.349		0.291		0.233		0.174		0.116	
Steel, lb/ft		25.0		19.8		17.0		13.9		10.7		7.31	
Design		P_n/Ω_c ASD	$\phi_c P_n$ LRFD	P_n/Ω_c ASD	$\phi_c P_n$ LRFD	P_n/Ω_c ASD	$\phi_c P_n$ LRFD	P_n/Ω_c ASD	$\phi_c P_n$ LRFD	P_n/Ω_c ASD	$\phi_c P_n$ LRFD	P_n/Ω_c ASD	$\phi_c P_n$ LRFD
Effective length, $(KL)_y$, with respect to weak axis (ft)	0	191	288	152	228	135	203	118	177	99.2	149	79.9	120
	1	190	286	151	226	134	201	117	176	98.4	148	79.3	119
	2	186	279	147	221	131	197	115	172	96.3	144	77.5	116
	3	179	268	142	213	126	189	110	165	92.8	139	74.5	112
	4	169	254	135	203	120	180	105	157	88.0	132	70.6	106
	5	158	237	126	190	112	168	97.8	147	82.3	123	65.9	98.8
	6	145	218	117	176	103	154	90.0	135	75.9	114	60.5	90.8
	7	131	197	107	160	92.9	139	81.6	122	68.9	103	54.7	82.1
	8	117	176	96.0	144	83.2	125	72.9	109	61.6	92.4	48.7	73.1
	9	102	154	85.1	128	74.1	111	64.1	96.2	54.3	81.4	42.7	64.1
	10	88.4	133	74.4	112	65.0	97.8	55.6	83.4	47.1	70.7	36.9	55.4
	11	75.2	113	64.1	96.4	56.3	84.7	48.1	72.3	40.3	60.4	31.4	47.1
	12	63.2	95.0	54.4	81.7	48.0	72.2	41.4	62.3	34.0	50.9	26.4	39.6
	13	53.8	80.9	46.3	69.6	40.9	61.5	35.3	53.1	28.9	43.4	22.5	33.7
	14	46.4	69.8	39.9	60.0	35.3	53.0	30.4	45.7	24.9	37.4	19.4	29.1
	15	40.4	60.8	34.8	52.3	30.7	46.2	26.5	39.9	21.7	32.6	16.9	25.3
	16	35.5	53.4	30.6	46.0	27.0	40.6	23.3	35.0	19.1	28.6	14.8	22.2
	17	31.5	47.3	27.1	40.7	23.9	36.0	20.6	31.0	16.9	25.4	13.1	19.7
	18	28.1	42.2	24.2	36.3	21.4	32.1	18.4	27.7	15.1	22.6	11.7	17.6
	19			21.7	32.6	19.2	28.8	16.5	24.8	13.5	20.3	10.5	15.8
	20							14.9	22.4	12.2	18.3	9.49	14.2
	21											8.61	12.9
Properties													
M_{nx}/Ω_b $\phi_b M_{nx}$	kip-ft	29.1	43.7	24.2	36.4	21.3	32.1	18.1	27.3	14.5	21.8	10.5	15.7
M_{ny}/Ω_b $\phi_b M_{ny}$	kip-ft	17.2	25.8	14.4	21.6	12.7	19.1	10.7	16.1	8.52	12.8	6.05	9.10
$P_{ex}(K_xL_x)^2/10^4$	kip-in.^{2}	841		746		685		609		521		410	
$P_{ey}(K_yL_y)^2/10^4$	kip-in.^{2}	261		232		213		189		161		125	
r_{my}, in.		1.12		1.17		1.19		1.22		1.25		1.27	
r_{mx}/r_{my}		1.80		1.79		1.79		1.80		1.80		1.81	

ASD	LRFD
Ω_c = 2.00	ϕ_c = 0.75

Note: Heavy line indicates KL/r_{my} equal to or greater than 200.
Dashed line indicates the KL beyond which bare steel strength controls.

5

COMPOSITE HSS5

Table 4-14 (continued)
Available Strength in Axial Compression, kips
Concrete Filled Rectangular HSS

F_y = 46 ksi
f'_c = 5 ksi

Shape		HSS5×4×											
		1/2		3/8		5/16		1/4		3/16		1/8	
t_{design}, in.		0.465		0.349		0.291		0.233		0.174		0.116	
Steel, lb/ft		25.0		19.8		17.0		13.9		10.7		7.31	
Design		P_n/Ω_c ASD	$\phi_c P_n$ LRFD	P_n/Ω_c ASD	$\phi_c P_n$ LRFD	P_n/Ω_c ASD	$\phi_c P_n$ LRFD	P_n/Ω_c ASD	$\phi_c P_n$ LRFD	P_n/Ω_c ASD	$\phi_c P_n$ LRFD	P_n/Ω_c ASD	$\phi_c P_n$ LRFD
Effective length, $(KL)_y$, with respect to weak axis (ft)	0	191	288	156	234	140	209	122	183	103	155	84.2	126
	1	191	286	155	233	139	208	122	183	103	154	83.8	126
	2	188	283	153	230	137	206	120	180	102	152	82.6	124
	3	184	276	150	224	134	201	117	176	99.4	149	80.7	121
	4	178	268	145	217	130	195	114	171	96.3	144	78.1	117
	5	171	257	139	208	124	187	109	164	92.5	139	74.8	112
	6	163	244	132	198	118	178	104	156	88.1	132	71.1	107
	7	153	230	124	186	112	167	98.1	147	83.1	125	66.9	100
	8	143	215	116	174	104	156	91.7	138	77.7	117	62.3	93.5
	9	132	199	107	162	96.4	145	85.0	127	72.0	108	57.6	86.3
	10	122	183	99.3	149	88.4	133	78.0	117	66.1	99.2	52.6	79.0
	11	110	166	90.9	137	80.3	120	71.0	107	60.2	90.3	47.7	71.6
	12	99.5	150	82.5	124	72.3	108	64.0	96.0	54.3	81.5	42.8	64.2
	13	88.8	133	74.3	112	64.6	97.2	57.2	85.8	48.6	72.9	38.1	57.1
	14	78.6	118	66.4	99.7	57.9	87.0	50.7	76.0	43.1	64.6	33.6	50.3
	15	68.7	103	58.7	88.3	51.4	77.3	44.4	66.6	37.7	56.6	29.3	43.9
	16	60.4	90.8	51.6	77.6	45.3	68.0	39.0	58.5	33.2	49.8	25.7	38.6
	17	53.5	80.4	45.7	68.7	40.1	60.3	34.6	51.9	29.4	44.1	22.8	34.2
	18	47.7	71.7	40.8	61.3	35.8	53.7	30.8	46.3	26.2	39.3	20.3	30.5
	19	42.8	64.4	36.6	55.0	32.1	48.2	27.7	41.5	23.5	35.3	18.2	27.4
	20	38.7	58.1	33.0	49.7	29.0	43.6	25.0	37.5	21.2	31.8	16.5	24.7
	21	35.1	52.7	30.0	45.0	26.3	39.5	22.7	34.0	19.3	28.9	14.9	22.4
	22	31.9	48.0	27.3	41.0	23.9	36.0	20.6	31.0	17.5	26.3	13.6	20.4
	23	29.2	43.9	25.0	37.5	21.9	32.9	18.9	28.3	16.1	24.1	12.4	18.7
	24	26.8	40.4	22.9	34.5	20.1	30.2	17.3	26.0	14.7	22.1	11.4	17.2
	25			21.1	31.8	18.5	27.9	16.0	24.0	13.6	20.4	10.5	15.8
	26							14.8	22.2	12.6	18.8	9.74	14.6
	27											9.03	13.6
Properties													
M_{nx}/Ω_b $\phi_b M_{nx}$	kip-ft	26.2	39.4	21.9	32.9	19.3	29.0	16.3	24.5	13.0	19.5	9.33	14.0
M_{ny}/Ω_b $\phi_b M_{ny}$	kip-ft	22.3	33.5	18.6	27.9	16.3	24.5	13.8	20.8	11.0	16.5	7.83	11.8
$P_{ex}(K_xL_x)^2/10^4$	kip-in.^{2}	664		587		536		478		409		317	
$P_{ey}(K_yL_y)^2/10^4$	kip-in.^{2}	459		404		368		328		279		216	
r_{my}, in.		1.46		1.52		1.54		1.57		1.60		1.62	
r_{mx}/r_{my}		1.20		1.21		1.21		1.21		1.21		1.21	

ASD	LRFD
$\Omega_c = 2.00$	$\phi_c = 0.75$

Note: Heavy line indicates KL/r_{my} equal to or greater than 200.
Dashed line indicates the KL beyond which bare steel strength controls.

Table 4-14 (continued)

$F_y = 46$ ksi
$f'_c = 5$ ksi

Available Strength in Axial Compression, kips

Concrete Filled Rectangular HSS

5

COMPOSITE HSS5

Shape		HSS5×3×											
		1/2		3/8		5/16		1/4		3/16		1/8	
t_{design}, in.		0.465		0.349		0.291		0.233		0.174		0.116	
Steel, lb/ft		21.6		17.3		14.8		12.2		9.42		6.46	
Design		P_n/Ω_c ASD	$\phi_c P_n$ LRFD	P_n/Ω_c ASD	$\phi_c P_n$ LRFD	P_n/Ω_c ASD	$\phi_c P_n$ LRFD	P_n/Ω_c ASD	$\phi_c P_n$ LRFD	P_n/Ω_c ASD	$\phi_c P_n$ LRFD	P_n/Ω_c ASD	$\phi_c P_n$ LRFD
Effective length, $(KL)_y$, with respect to weak axis (ft)	0	166	249	132	198	117	175	102	153	85.5	128	68.7	103
	1	164	247	131	196	116	174	101	152	84.9	127	68.2	102
	2	160	241	128	192	113	170	98.7	148	82.9	124	66.6	99.9
	3	154	232	123	185	109	163	95.0	142	79.8	120	64.1	96.1
	4	146	219	117	176	103	154	90.0	135	75.7	114	60.6	91.0
	5	135	203	109	164	95.9	144	83.9	126	70.7	106	56.5	84.8
	6	124	186	101	151	87.9	132	77.1	116	65.0	97.5	51.8	77.8
	7	111	167	91.4	137	79.8	120	69.7	105	58.8	88.3	46.8	70.2
	8	98.4	148	81.7	123	71.8	108	62.1	93.1	52.5	78.7	41.6	62.5
	9	85.7	129	72.0	108	63.7	95.7	54.4	81.7	46.1	69.1	36.5	54.7
	10	73.4	110	62.5	93.9	55.7	83.7	47.0	70.5	39.9	59.8	31.4	47.1
	11	61.7	92.7	53.4	80.3	48.0	72.1	40.6	61.0	34.0	51.0	26.6	39.9
	12	51.8	77.9	45.0	67.7	40.7	61.1	34.6	52.0	28.6	42.9	22.4	33.6
	13	44.2	66.4	38.4	57.7	34.7	52.1	29.5	44.3	24.3	36.5	19.1	28.6
	14	38.1	57.2	33.1	49.7	29.9	44.9	25.4	38.2	21.0	31.5	16.4	24.7
	15	33.2	49.9	28.8	43.3	26.0	39.1	22.1	33.3	18.3	27.4	14.3	21.5
	16	29.2	43.8	25.3	38.1	22.9	34.4	19.5	29.2	16.1	24.1	12.6	18.9
	17	25.8	38.8	22.4	33.7	20.3	30.5	17.2	25.9	14.2	21.4	11.1	16.7
	18	23.0	34.6	20.0	30.1	18.1	27.2	15.4	23.1	12.7	19.0	9.94	14.9
	19			18.0	27.0	16.2	24.4	13.8	20.7	11.4	17.1	8.93	13.4
	20									10.3	15.4	8.06	12.1
Properties													
M_{nx}/Ω_b $\phi_b M_{nx}$	kip-ft	21.1	31.7	17.8	26.8	15.8	23.7	13.5	20.2	10.8	16.2	7.80	11.7
M_{ny}/Ω_b $\phi_b M_{ny}$	kip-ft	14.4	21.6	12.2	18.3	10.8	16.2	9.19	13.8	7.33	11.0	5.25	7.89
$P_{ex}(K_xL_x)^2/10^4$	kip-in.^{2}	507		455		420		374		321		253	
$P_{ey}(K_yL_y)^2/10^4$	kip-in.^{2}	215		194		178		159		135		106	
r_{my}, in.		1.09		1.14		1.17		1.19		1.22		1.25	
r_{mx}/r_{my}		1.54		1.53		1.54		1.53		1.54		1.54	

ASD	LRFD
$\Omega_c = 2.00$	$\phi_c = 0.75$

Note: Heavy line indicates KL/r_{my} equal to or greater than 200.
Dashed line indicates the KL beyond which bare steel strength controls.

5

COMPOSITE
HSS5-HSS4

Table 4-14 (continued)
Available Strength in Axial Compression, kips
Concrete Filled Rectangular HSS

F_y = 46 ksi
f'_c = 5 ksi

Shape		HSS5×2½×						HSS4×3×					
		1/4		3/16		1/8		3/8		5/16		1/4	
t_{design}, in.		0.233		0.174		0.116		0.349		0.291		0.233	
Steel, lb/ft		11.4		8.78		6.03		14.7		12.7		10.5	
Design		P_n/Ω_c ASD	$\phi_c P_n$ LRFD	P_n/Ω_c ASD	$\phi_c P_n$ LRFD	P_n/Ω_c ASD	$\phi_c P_n$ LRFD	P_n/Ω_c ASD	$\phi_c P_n$ LRFD	P_n/Ω_c ASD	$\phi_c P_n$ LRFD	P_n/Ω_c ASD	$\phi_c P_n$ LRFD
Effective length, $(KL)_y$, with respect to weak axis (ft)	0	91.7	138	76.6	115	60.9	91.4	113	169	98.4	148	85.9	129
	1	90.7	136	75.8	114	60.2	90.4	112	168	97.6	146	85.2	128
	2	87.8	132	73.4	110	58.3	87.5	109	164	95.2	143	83.1	125
	3	83.1	125	69.6	104	55.2	82.8	105	158	91.3	137	79.8	120
	4	76.9	115	64.5	96.8	51.2	76.8	99.3	149	86.1	129	75.5	113
	5	69.6	104	58.5	87.8	46.4	69.6	92.5	139	80.2	121	70.2	105
	6	61.7	92.6	52.0	78.0	41.2	61.8	84.9	128	73.8	111	64.2	96.3
	7	53.8	80.8	45.2	67.8	35.7	53.6	76.6	115	66.9	100	57.8	86.7
	8	46.5	69.8	38.5	57.7	30.4	45.5	68.1	102	59.7	89.7	51.2	76.9
	9	39.4	59.2	32.0	48.0	25.2	37.9	59.6	89.6	52.4	78.8	44.7	67.2
	10	32.7	49.2	26.2	39.3	20.6	30.8	51.3	77.1	45.4	68.2	39.0	58.6
	11	27.0	40.6	21.6	32.5	17.0	25.5	43.5	65.3	38.7	58.2	33.5	50.4
	12	22.7	34.1	18.2	27.3	14.3	21.4	36.5	54.9	32.6	49.0	28.4	42.7
	13	19.4	29.1	15.5	23.3	12.2	18.2	31.1	46.8	27.8	41.7	24.2	36.3
	14	16.7	25.1	13.4	20.1	10.5	15.7	26.8	40.3	23.9	36.0	20.9	31.3
	15	14.5	21.9	11.6	17.5	9.13	13.7	23.4	35.1	20.9	31.3	18.2	27.3
	16	12.8	19.2	10.2	15.4	8.03	12.0	20.5	30.9	18.3	27.5	16.0	24.0
	17			9.06	13.6	7.11	10.7	18.2	27.4	16.2	24.4	14.1	21.3
	18							16.2	24.4	14.5	21.8	12.6	19.0
	19											11.3	17.0
Properties													
M_{nx}/Ω_b	$\phi_b M_{nx}$ kip-ft	12.0	18.1	9.66	14.5	7.02	10.6	12.3	18.5	11.0	16.5	9.42	14.2
M_{ny}/Ω_b	$\phi_b M_{ny}$ kip-ft	7.11	10.7	5.70	8.57	4.10	6.16	9.98	15.0	8.89	13.4	7.61	11.4
$P_{ex}(K_xL_x)^2/10^4$	kip-in.^{2}	323		277		221		250		232		208	
$P_{ey}(K_yL_y)^2/10^4$	kip-in.^{2}	100		85.7		67.5		155		143		128	
r_{my}, in.		0.999		1.02		1.05		1.11		1.13		1.16	
r_{mx}/r_{my}		1.80		1.80		1.81		1.27		1.27		1.27	

ASD	LRFD
$\Omega_c = 2.00$	$\phi_c = 0.75$

Note: Heavy line indicates KL/r_{my} equal to or greater than 200.
Dashed line indicates the KL beyond which bare steel strength controls.

Table 4-14 (continued)

F_y = 46 ksi
f'_c = 5 ksi

Available Strength in Axial Compression, kips

Concrete Filled Rectangular HSS

5
COMPOSITE HSS4

Shape		HSS4×3×				HSS4×2½×							
		3/16		1/8		3/8		5/16		1/4		3/16	
t_{design}, in.		0.174		0.116		0.349		0.291		0.233		0.174	
Steel, lb/ft		8.15		5.61		13.4		11.6		9.66		7.51	
Design		P_n/Ω_c ASD	$\phi_c P_n$ LRFD	P_n/Ω_c ASD	$\phi_c P_n$ LRFD	P_n/Ω_c ASD	$\phi_c P_n$ LRFD	P_n/Ω_c ASD	$\phi_c P_n$ LRFD	P_n/Ω_c ASD	$\phi_c P_n$ LRFD	P_n/Ω_c ASD	$\phi_c P_n$ LRFD
Effective length, $(KL)_{yr}$ with respect to weak axis (ft)	0	72.0	108	57.6	86.3	103	155	89.0	134	76.6	115	64.0	96.0
	1	71.5	107	57.1	85.7	102	153	88.0	132	75.7	114	63.3	95.0
	2	69.8	105	55.7	83.6	98.4	148	85.2	128	73.2	110	61.2	91.9
	3	67.1	101	53.6	80.3	93.0	140	80.7	121	69.1	104	57.9	86.9
	4	63.5	95.2	50.7	76.0	85.8	129	74.8	112	63.8	95.7	53.6	80.4
	5	59.1	88.7	47.1	70.7	77.5	116	67.9	102	57.6	86.3	48.5	72.7
	6	54.2	81.3	43.2	64.8	68.4	103	60.3	90.6	50.9	76.5	42.9	64.3
	7	48.9	73.4	38.9	58.4	58.9	88.6	52.4	78.8	44.5	67.0	37.1	55.7
	8	43.5	65.2	34.5	51.8	49.7	74.7	44.6	67.0	38.2	57.4	31.4	47.1
	9	38.0	57.0	30.1	45.2	40.9	61.5	37.1	55.7	32.1	48.3	26.0	39.0
	10	32.8	49.1	25.9	38.9	33.2	49.9	30.2	45.4	26.4	39.7	21.5	32.3
	11	27.7	41.5	21.9	32.8	27.4	41.2	25.0	37.6	21.8	32.8	17.7	26.7
	12	23.3	34.9	18.4	27.6	23.0	34.6	21.0	31.6	18.3	27.5	14.9	22.4
	13	19.8	29.7	15.7	23.5	19.6	29.5	17.9	26.9	15.6	23.5	12.7	19.1
	14	17.1	25.6	13.5	20.3	16.9	25.4	15.4	23.2	13.5	20.2	10.9	16.5
	15	14.9	22.3	11.8	17.6	14.7	22.2	13.4	20.2	11.7	17.6	9.54	14.3
	16	13.1	19.6	10.3	15.5					10.3	15.5	8.38	12.6
	17	11.6	17.4	9.16	13.7								
	18	10.3	15.5	8.17	12.3								
	19	9.28	13.9	7.33	11.0								
	20			6.62	9.92								
Properties													
M_{nx}/Ω_b M_{ny}/Ω_b	$\phi_b M_{nx}$ $\phi_b M_{ny}$ kip-ft	7.58 6.11	11.4 9.18	5.52 4.41	8.29 6.63	10.7 7.58	16.2 11.4	9.63 6.80	14.5 10.2	8.32 5.87	12.5 8.82	6.72 4.73	10.1 7.11
$P_{ex}(K_xL_x)^2/10^4$	kip-in.²	178		141		212		197		178		153	
$P_{ey}(K_yL_y)^2/10^4$	kip-in.²	110		86.9		96.1		89.5		80.9		69.4	
r_{my}, in.		1.19		1.21		0.922		0.947		0.973		0.999	
r_{mx}/r_{my}		1.27		1.27		1.49		1.48		1.48		1.48	

ASD	LRFD
$\Omega_c = 2.00$	$\phi_c = 0.75$

Note: Heavy line indicates KL/r_{my} equal to or greater than 200.
Dashed line indicates the KL beyond which bare steel strength controls.

5

COMPOSITE HSS4

Table 4-14 (continued)
Available Strength in Axial Compression, kips
Concrete Filled Rectangular HSS

F_y = 46 ksi
f'_c = 5 ksi

Shape		HSS4×2½×		HSS4×2×							
		1/8		3/8		5/16		1/4		3/16		1/8	
t_{design}, in.		0.116		0.349		0.291		0.233		0.174		0.116	
Steel, lb/ft		5.18		12.2		10.6		8.81		6.87		4.75	
Design		P_n/Ω_c ASD	$\phi_c P_n$ LRFD	P_n/Ω_c ASD	$\phi_c P_n$ LRFD	P_n/Ω_c ASD	$\phi_c P_n$ LRFD	P_n/Ω_c ASD	$\phi_c P_n$ LRFD	P_n/Ω_c ASD	$\phi_c P_n$ LRFD	P_n/Ω_c ASD	$\phi_c P_n$ LRFD
Effective length, $(KL)_y$, with respect to weak axis (ft)	0	50.8	76.2	93.4	140	81.0	122	67.5	101	56.2	84.4	44.0	66.0
	1	50.2	75.3	91.7	138	79.6	120	66.4	99.5	55.3	82.9	43.3	64.9
	2	48.6	72.9	86.8	130	75.6	114	63.0	94.8	52.5	78.8	41.2	61.8
	3	46.0	68.9	79.2	119	69.5	104	58.2	87.5	48.2	72.3	37.9	56.8
	4	42.5	63.8	69.7	105	61.7	92.7	52.1	78.2	42.8	64.1	33.7	50.5
	5	38.5	57.7	59.2	89.0	52.9	79.5	45.1	67.8	36.7	55.0	29.0	43.4
	6	34.0	51.1	48.4	72.8	43.9	65.9	37.8	56.9	30.4	45.6	24.1	36.1
	7	29.5	44.2	38.2	57.5	35.1	52.8	30.7	46.2	25.0	37.5	19.4	29.1
	8	24.9	37.4	29.4	44.2	27.3	41.0	24.1	36.3	19.9	29.9	15.1	22.6
	9	20.6	31.0	23.2	34.9	21.5	32.4	19.1	28.7	15.7	23.7	11.9	17.9
	10	16.8	25.2	18.8	28.3	17.4	26.2	15.5	23.2	12.8	19.2	9.65	14.5
	11	13.9	20.8	15.5	23.4	14.4	21.7	12.8	19.2	10.5	15.8	7.98	12.0
	12	11.7	17.5	13.1	19.6	12.1	18.2	10.7	16.1	8.86	13.3	6.70	10.1
	13	9.93	14.9							7.55	11.3	5.71	8.57
	14	8.56	12.8										
	15	7.46	11.2										
	16	6.55	9.83										
	17	5.81	8.71										
Properties													
M_{nx}/Ω_b	$\phi_b M_{nx}$ kip-ft	4.90	7.37	9.16	13.8	8.27	12.4	7.19	10.8	5.85	8.79	4.30	6.47
M_{ny}/Ω_b	$\phi_b M_{ny}$ kip-ft	3.42	5.13	5.42	8.15	4.92	7.39	4.27	6.42	3.46	5.20	2.52	3.79
$P_{ex}(K_xL_x)^2/10^4$	kip-in.^{2}	123		173		163		148		128		103	
$P_{ey}(K_yL_y)^2/10^4$	kip-in.^{2}	55.1		53.5		50.5		46.0		39.6		31.7	
r_{my}, in.		1.03		0.729		0.754		0.779		0.804		0.830	
r_{mx}/r_{my}		1.49		1.80		1.80		1.79		1.80		1.80	

ASD	LRFD
$\Omega_c = 2.00$	$\phi_c = 0.75$

Note: Heavy line indicates KL/r_{my} equal to or greater than 200.
Dashed line indicates the KL beyond which bare steel strength controls.

F_y = 46 ksi
f'_c = 4 ksi

Table 4-15
Available Strength in Axial Compression, kips
Concrete Filled Square HSS

4
COMPOSITE
HSS16-HSS14

Shape		HSS16×16×						HSS14×14×					
		1/2		3/8		5/16		5/8		1/2		3/8	
t_{design}, in.		0.465		0.349		0.291		0.581		0.465		0.349	
Steel, lb/ft		103		78.5		65.9		110		89.7		68.3	
Design		P_n/Ω_c ASD	$\phi_c P_n$ LRFD	P_n/Ω_c ASD	$\phi_c P_n$ LRFD	P_n/Ω_c ASD	$\phi_c P_n$ LRFD	P_n/Ω_c ASD	$\phi_c P_n$ LRFD	P_n/Ω_c ASD	$\phi_c P_n$ LRFD	P_n/Ω_c ASD	$\phi_c P_n$ LRFD
Effective length, KL (ft)	0	1040	1550	892	1340	820	1230	977	1460	856	1280	731	1100
	6	1030	1540	883	1320	812	1220	964	1450	845	1270	721	1080
	7	1020	1530	880	1320	808	1210	959	1440	841	1260	717	1080
	8	1020	1530	876	1310	805	1210	954	1430	836	1250	713	1070
	9	1010	1520	872	1310	801	1200	948	1420	831	1250	709	1060
	10	1010	1510	867	1300	796	1190	942	1410	825	1240	704	1060
	11	1000	1500	862	1290	791	1190	935	1400	819	1230	698	1050
	12	996	1490	856	1280	786	1180	927	1390	812	1220	693	1040
	13	989	1480	850	1270	780	1170	919	1380	805	1210	686	1030
	14	981	1470	843	1260	774	1160	910	1360	797	1200	679	1020
	15	973	1460	836	1250	767	1150	901	1350	789	1180	672	1010
	16	965	1450	828	1240	760	1140	891	1340	780	1170	664	996
	17	956	1430	821	1230	753	1130	880	1320	771	1160	656	984
	18	946	1420	812	1220	745	1120	869	1300	761	1140	648	971
	19	937	1410	804	1210	737	1100	857	1290	751	1130	639	958
	20	926	1390	795	1190	728	1090	845	1270	740	1110	629	944
	21	916	1370	785	1180	719	1080	833	1250	729	1090	620	930
	22	905	1360	775	1160	710	1070	820	1230	718	1080	610	915
	23	894	1340	765	1150	701	1050	807	1210	706	1060	600	900
	24	882	1320	755	1130	691	1040	793	1190	694	1040	589	884
	25	870	1300	744	1120	681	1020	780	1170	682	1020	579	868
	26	857	1290	733	1100	671	1010	765	1150	669	1000	568	852
	27	845	1270	722	1080	660	990	751	1130	657	985	557	835
	28	832	1250	711	1070	649	974	736	1100	644	965	545	818
	29	819	1230	699	1050	638	958	721	1080	630	946	534	801
	30	805	1210	687	1030	627	941	706	1060	617	926	522	784
	32	778	1170	663	994	605	907	675	1010	590	885	499	748
	34	749	1120	638	957	581	872	644	966	562	843	475	712
	36	720	1080	613	919	557	836	612	918	534	802	451	676
	38	691	1040	587	880	533	800	580	870	506	760	426	640
	40	661	992	561	841	509	764	549	823	478	718	402	604
Properties													
M_n/Ω_b	$\phi_b M_n$ kip-ft	422	634	331	498	283	425	378	569	316	475	248	373
$P_e(KL)^2/10^4$	kip-in.^{2}	44500		37100		33200		32700		28400		23600	
ASD	LRFD												
Ω_c = 2.00	ϕ_c = 0.75												

4

COMPOSITE HSS14-HSS12

Table 4-15 (continued)
Available Strength in Axial Compression, kips
Concrete Filled Square HSS

F_y = 46 ksi
f'_c = 4 ksi

Shape		HSS14×14×		HSS12×12×									
		5/16		5/8		1/2		3/8		5/16		1/4	
t_{design}, in.		0.291		0.581		0.465		0.349		0.291		0.233	
Steel, lb/ft		57.4		93.3		76.1		58.1		48.9		39.4	
Design		P_n/Ω_c ASD	$\phi_c P_n$ LRFD	P_n/Ω_c ASD	$\phi_c P_n$ LRFD	P_n/Ω_c ASD	$\phi_c P_n$ LRFD	P_n/Ω_c ASD	$\phi_c P_n$ LRFD	P_n/Ω_c ASD	$\phi_c P_n$ LRFD	P_n/Ω_c ASD	$\phi_c P_n$ LRFD
Effective length, KL (ft)	0	667	1000	790	1190	689	1030	585	877	530	795	474	712
	6	658	987	776	1160	677	1010	575	862	520	780	466	698
	7	655	982	771	1160	672	1010	571	856	517	775	462	694
	8	651	976	766	1150	667	1000	567	850	513	769	459	688
	9	647	970	759	1140	662	993	562	843	508	762	455	682
	10	642	963	752	1130	656	984	556	835	503	755	450	675
	11	637	955	744	1120	649	973	551	826	498	747	445	668
	12	631	947	736	1100	642	963	544	816	492	738	440	660
	13	625	938	727	1090	634	951	537	806	486	729	434	651
	14	619	929	717	1080	626	938	530	795	479	719	428	642
	15	612	918	707	1060	617	925	523	784	472	709	422	633
	16	605	908	696	1040	607	911	515	772	465	697	415	622
	17	597	896	685	1030	598	896	506	759	457	686	408	612
	18	590	884	673	1010	587	881	497	746	449	674	400	601
	19	581	872	661	991	577	865	488	732	441	661	393	589
	20	573	859	648	972	566	849	479	718	432	648	385	577
	21	564	846	635	953	555	832	469	703	423	635	377	565
	22	555	832	622	933	543	815	459	688	414	621	368	552
	23	545	818	608	912	531	797	449	673	405	607	360	539
	24	536	803	594	891	519	779	438	657	395	593	351	526
	25	526	788	580	870	507	760	428	641	385	578	342	513
	26	516	773	565	848	494	741	417	625	375	563	333	499
	27	505	758	551	826	482	722	406	609	365	548	324	486
	28	495	742	536	804	469	703	395	592	355	533	315	472
	29	484	726	521	781	456	684	384	576	345	518	305	458
	30	473	710	506	759	443	664	373	559	335	502	296	444
	32	451	677	476	714	417	625	350	525	314	472	277	416
	34	429	644	446	669	390	586	328	491	294	441	259	388
	36	407	611	416	624	365	547	305	458	274	411	240	361
	38	385	577	386	580	339	508	284	425	254	381	223	334
	40	363	544	358	537	314	471	262	393	234	352	205	308
Properties													
M_n/Ω_b	$\phi_b M_n$ kip-ft	212	319	270	406	226	339	178	268	153	230	126	190
$P_e(KL)^2/10^4$	kip-in.^{2}	21100		19200		16900		14100		12500		10900	

ASD	LRFD
$\Omega_c = 2.00$	$\phi_c = 0.75$

F_y = 46 ksi
f'_c = 4 ksi

Table 4-15 (continued)
Available Strength in Axial Compression, kips
Concrete Filled Square HSS

4
COMPOSITE
HSS10

Shape		HSS10×10×											
		5/8		1/2		3/8		5/16		1/4		3/16	
t_{design}, in.		0.581		0.465		0.349		0.291		0.233		0.174	
Steel, lb/ft		76.3		62.5		47.9		40.4		32.6		24.7	
Design		P_n/Ω_c ASD	$\phi_c P_n$ LRFD	P_n/Ω_c ASD	$\phi_c P_n$ LRFD	P_n/Ω_c ASD	$\phi_c P_n$ LRFD	P_n/Ω_c ASD	$\phi_c P_n$ LRFD	P_n/Ω_c ASD	$\phi_c P_n$ LRFD	P_n/Ω_c ASD	$\phi_c P_n$ LRFD
Effective length, KL (ft)	0	615	923	535	803	451	676	406	609	361	541	314	471
	6	599	899	522	782	439	659	396	593	351	527	305	458
	7	594	891	517	775	435	653	392	588	348	522	302	453
	8	587	881	511	767	430	646	388	581	344	516	299	448
	9	580	870	505	758	425	638	383	574	340	509	295	442
	10	572	859	498	748	420	629	378	567	335	502	291	436
	11	564	846	491	736	413	620	372	558	330	495	286	429
	12	554	832	483	725	407	610	366	549	324	486	281	421
	13	545	817	474	712	399	599	359	539	318	477	276	413
	14	534	801	465	698	392	588	352	529	312	468	270	405
	15	523	784	456	684	384	576	345	518	305	458	264	396
	16	511	767	446	669	376	563	337	506	298	448	258	387
	17	499	749	436	653	367	550	330	494	291	437	251	377
	18	487	730	425	637	358	537	321	482	284	426	245	367
	19	474	711	414	621	348	523	313	469	276	414	238	357
	20	461	691	403	604	339	508	304	456	268	402	231	346
	21	447	671	391	587	329	494	295	443	260	390	224	335
	22	434	650	379	569	319	479	286	429	252	378	216	325
	23	420	630	367	551	309	464	277	416	244	366	209	313
	24	406	609	355	533	299	449	268	402	236	353	202	302
	25	392	587	343	515	289	433	259	388	227	341	194	291
	26	377	566	331	496	279	418	249	374	219	328	187	280
	27	363	545	319	478	268	402	240	360	210	316	179	269
	28	349	524	306	459	258	387	230	346	202	303	172	258
	29	335	503	294	441	248	372	221	332	194	291	164	247
	30	321	482	282	423	238	356	212	318	185	278	157	236
	32	294	440	258	387	217	326	194	291	169	254	143	214
	34	267	400	235	353	198	297	176	264	153	230	129	194
	36	242	364	213	319	179	269	159	239	138	207	116	173
	38	219	329	191	287	161	242	143	214	124	186	104	156
	40	198	297	173	259	145	218	129	193	112	168	93.7	141
Properties													
M_n/Ω_b	$\phi_b M_n$ kip-ft	179	270	151	227	120	180	103	155	85.5	129	66.3	99.7
$P_e(KL)^2/10^4$	kip-in.^{2}	10300		9070		7640		6780		5880		4920	

ASD: $\Omega_c = 2.00$ LRFD: $\phi_c = 0.75$

Note: Dashed line indicates the KL beyond which bare steel strength controls.

4

COMPOSITE HSS9

Table 4-15 (continued)
Available Strength in Axial Compression, kips
Concrete Filled Square HSS

F_y = 46 ksi
f'_c = 4 ksi

Shape		HSS9×9×											
		5/8		1/2		3/8		5/16		1/4		3/16	
t_{design}, in.		0.581		0.465		0.349		0.291		0.233		0.174	
Steel, lb/ft		67.8		55.7		42.8		36.1		29.2		22.2	
Design		P_n/Ω_c ASD	$\phi_c P_n$ LRFD	P_n/Ω_c ASD	$\phi_c P_n$ LRFD	P_n/Ω_c ASD	$\phi_c P_n$ LRFD	P_n/Ω_c ASD	$\phi_c P_n$ LRFD	P_n/Ω_c ASD	$\phi_c P_n$ LRFD	P_n/Ω_c ASD	$\phi_c P_n$ LRFD
Effective length, KL (ft)	0	534	801	462	693	388	583	349	523	308	463	267	400
	6	517	776	448	672	376	565	338	506	299	448	258	387
	7	511	766	443	664	372	558	334	501	295	443	255	382
	8	504	756	437	655	367	551	329	494	291	437	251	377
	9	496	745	430	646	362	543	324	487	287	430	247	371
	10	488	732	423	635	356	534	319	479	282	423	243	364
	11	479	718	416	623	349	524	313	470	277	415	238	357
	12	469	704	407	611	343	514	307	460	271	406	233	350
	13	459	688	398	598	335	503	300	450	265	397	228	342
	14	448	671	389	583	327	491	293	440	259	388	222	333
	15	436	654	379	569	319	479	286	429	252	378	216	324
	16	424	636	369	553	311	466	278	417	245	367	210	315
	17	412	617	358	538	302	453	270	405	238	357	204	305
	18	399	598	347	521	293	439	262	393	230	346	197	296
	19	386	579	336	505	283	425	254	380	223	334	190	286
	20	372	559	325	487	274	411	245	367	215	323	184	275
	21	359	538	313	470	264	396	236	354	207	311	177	265
	22	345	518	302	453	255	382	227	341	200	299	170	255
	23	332	497	290	435	245	367	219	328	192	287	163	244
	24	318	478	278	417	235	352	210	315	184	276	156	234
	25	305	459	267	400	225	338	201	301	176	264	149	223
	26	292	439	255	382	215	323	192	288	168	252	142	213
	27	280	420	243	365	206	308	183	275	160	240	135	203
	28	267	401	232	348	196	294	175	262	152	229	128	192
	29	255	383	220	331	186	280	166	249	145	217	122	182
	30	242	364	209	314	177	266	158	236	137	206	115	173
	32	218	328	188	281	159	238	141	212	123	184	102	154
	34	195	293	167	250	141	212	126	188	109	163	90.7	136
	36	174	262	149	223	126	189	112	168	97.1	146	80.9	121
	38	156	235	133	200	113	170	100	151	87.2	131	72.6	109
	40	141	212	120	181	102	153	90.7	136	78.7	118	65.5	98.3
Properties													
M_n/Ω_b	$\phi_b M_n$ kip-ft	142	213	120	180	95.2	143	81.9	123	68.0	102	53.1	79.8
$P_e(KL)^2/10^4$	kip-in.^{2}	7140		6330		5360		4770		4130		3440	
ASD	LRFD	Note: Dashed line indicates the KL beyond which bare steel strength controls.											
$\Omega_c = 2.00$	$\phi_c = 0.75$												

F_y = 46 ksi
f'_c = 4 ksi

Table 4-15 (continued)
Available Strength in Axial Compression, kips
Concrete Filled Square HSS

4
COMPOSITE HSS8

Shape		HSS8×8×									
		5/8		1/2		3/8		5/16		1/4	
t_{design}, in.		0.581		0.465		0.349		0.291		0.233	
Steel, lb/ft		59.3		48.9		37.7		31.8		25.8	
Design		P_n/Ω_c ASD	$\phi_c P_n$ LRFD	P_n/Ω_c ASD	$\phi_c P_n$ LRFD	P_n/Ω_c ASD	$\phi_c P_n$ LRFD	P_n/Ω_c ASD	$\phi_c P_n$ LRFD	P_n/Ω_c ASD	$\phi_c P_n$ LRFD
Effective length, KL (ft)	0	456	684	395	593	330	494	295	442	260	390
	6	438	656	379	569	317	475	283	425	249	374
	7	431	646	374	561	312	468	279	419	246	369
	8	424	635	368	551	307	461	275	412	242	363
	9	415	623	361	541	301	452	270	404	237	356
	10	406	609	353	529	295	443	264	396	232	348
	11	396	596	345	517	288	433	258	387	227	340
	12	386	581	336	504	281	422	251	377	221	331
	13	376	565	326	490	273	410	245	367	215	322
	14	365	549	317	475	265	398	237	356	208	312
	15	354	532	306	460	257	386	230	345	202	302
	16	342	514	296	444	248	373	222	333	195	292
	17	330	496	285	428	239	359	214	321	188	281
	18	318	478	274	411	230	346	206	309	180	271
	19	306	459	263	394	221	332	198	297	173	260
	20	293	440	251	377	212	318	189	284	166	248
	21	280	421	240	360	202	304	181	271	158	237
	22	267	402	229	343	193	290	172	259	151	226
	23	255	383	217	326	184	275	164	246	143	215
	24	242	364	206	309	174	262	156	234	136	204
	25	230	345	195	293	165	248	148	221	129	193
	26	217	326	184	276	156	234	139	209	121	182
	27	205	308	173	260	147	221	131	197	114	172
	28	193	290	163	246	139	208	124	186	108	161
	29	182	273	154	231	130	195	116	174	101	151
	30	170	256	145	217	122	182	109	163	94.2	141
	32	149	225	127	191	107	160	95.4	143	82.8	124
	34	132	199	113	169	94.6	142	84.5	127	73.3	110
	36	118	177	100	151	84.4	127	75.4	113	65.4	98.1
	38	106	159	90.2	136	75.8	114	67.7	101	58.7	88.0
	40	95.6	144	81.4	122	68.4	103	61.1	91.6	53.0	79.4
Properties											
M_r/Ω_b	$\phi_b M_n$ kip-ft	108	163	91.9	138	73.4	110	63.5	95.4	52.7	79.3
$P_e(KL)^2/10^4$	kip-in.^{2}	4730		4220		3590		3210		2780	
ASD	LRFD	Note: Dashed line indicates the KL beyond which bare steel strength controls.									
Ω_c = 2.00	ϕ_c = 0.75										

4

COMPOSITE
HSS8-HSS7

Table 4-15 (continued)
Available Strength in Axial Compression, kips
Concrete Filled Square HSS

F_y = 46 ksi
f'_c = 4 ksi

Shape		HSS8×8×		HSS7×7×							
		3/16		5/8		1/2		3/8		5/16	
t_{design}, in.		0.174		0.581		0.465		0.349		0.291	
Steel, lb/ft		19.6		50.8		42.1		32.6		27.6	
Design		P_n/Ω_c ASD	$\phi_c P_n$ LRFD	P_n/Ω_c ASD	$\phi_c P_n$ LRFD	P_n/Ω_c ASD	$\phi_c P_n$ LRFD	P_n/Ω_c ASD	$\phi_c P_n$ LRFD	P_n/Ω_c ASD	$\phi_c P_n$ LRFD
Effective length, KL (ft)	0	223	335	386	580	329	494	274	410	244	367
	6	214	321	366	550	312	468	260	390	232	348
	7	211	316	359	540	306	459	255	382	228	342
	8	207	311	351	528	299	449	249	374	223	334
	9	203	304	343	515	292	437	243	365	218	326
	10	199	298	333	501	283	425	237	355	212	317
	11	194	291	323	486	276	412	229	344	205	308
	12	189	283	313	470	265	398	222	333	199	298
	13	183	275	302	453	256	383	214	321	192	287
	14	178	266	290	436	245	368	206	309	184	276
	15	172	258	278	418	235	352	197	296	177	265
	16	166	248	266	399	224	337	188	283	169	253
	17	159	239	253	381	214	320	180	269	161	242
	18	153	230	241	362	203	305	171	256	153	230
	19	147	220	228	343	193	290	162	243	145	218
	20	140	210	215	324	182	274	153	229	137	206
	21	134	200	203	305	172	259	144	216	129	194
	22	127	191	191	287	162	244	135	203	122	182
	23	121	181	179	268	152	229	127	190	114	171
	24	114	171	167	251	143	214	118	177	106	160
	25	108	162	155	233	133	200	110	165	99.2	149
	26	102	152	144	216	124	186	102	153	92.0	138
	27	95.6	143	133	201	115	173	94.6	142	85.3	128
	28	89.6	134	124	186	107	161	88.0	132	79.3	119
	29	83.7	126	116	174	99.6	150	82.0	123	73.9	111
	30	78.2	117	108	162	93.1	140	76.6	115	69.1	104
	32	68.8	103	95.0	143	81.8	123	67.4	101	60.7	91.1
	34	60.9	91.4	84.1	126	72.4	109	59.7	89.5	53.8	80.7
	36	54.3	81.5	75.1	113	64.6	97.1	53.2	79.8	48.0	72.0
	38	48.8	73.1	67.4	101	58.0	87.2	47.8	71.6	43.1	64.6
	40	44.0	66.0	60.8	91.4	52.3	78.7	43.1	64.7	38.9	58.3
Properties											
M_n/Ω_b	$\phi_b M_n$ kip-ft	41.3	62.0	79.5	120	67.9	102	54.7	82.2	47.4	71.2
$P_e(KL)^2/10^4$	kip-in.^{2}	2310		2970		2650		2270		2040	

ASD	LRFD
Ω_c = 2.00	ϕ_c = 0.75

Note: Dashed line indicates the KL beyond which bare steel strength controls.

F_y = 46 ksi
f'_c = 4 ksi

Table 4-15 (continued)
Available Strength in Axial Compression, kips
Concrete Filled Square HSS

4
COMPOSITE
HSS7-HSS6

Shape		HSS7×7×						HSS6×6×			
		1/4		3/16		1/8[c,f]		5/8		1/2	
t_{design}, in.		0.233		0.174		0.116		0.581		0.465	
Steel, lb/ft		22.4		17.1		11.6		42.3		35.2	
Design		P_n/Ω_c ASD	$\phi_c P_n$ LRFD	P_n/Ω_c ASD	$\phi_c P_n$ LRFD	P_n/Ω_c ASD	$\phi_c P_n$ LRFD	P_n/Ω_c ASD	$\phi_c P_n$ LRFD	P_n/Ω_c ASD	$\phi_c P_n$ LRFD
Effective length, KL (ft)	0	214	322	183	274	151	226	322	484	268	403
	6	203	305	173	260	142	213	299	450	250	376
	7	200	299	170	255	139	209	291	438	244	367
	8	195	293	166	249	136	204	283	425	237	356
	9	191	286	162	243	132	199	273	410	229	344
	10	185	278	157	236	129	193	262	394	221	332
	11	180	270	152	229	124	187	251	378	212	319
	12	174	261	147	221	120	180	240	360	203	305
	13	168	251	142	213	115	173	228	342	193	290
	14	161	242	136	204	110	166	215	324	183	275
	15	155	232	131	196	106	158	203	305	173	260
	16	148	222	125	187	100	151	190	286	163	245
	17	141	211	119	178	95.4	143	178	267	153	230
	18	134	201	113	169	90.2	135	165	249	143	215
	19	127	190	107	160	85.1	128	153	231	133	200
	20	120	180	100	151	80.0	120	142	213	123	185
	21	113	169	94.5	142	75.0	113	130	196	114	171
	22	106	159	88.7	133	70.1	105	119	179	104	157
	23	99.3	149	82.9	124	65.3	97.9	109	163	95.6	144
	24	92.7	139	77.3	116	60.6	90.9	99.8	150	87.8	132
	25	86.3	130	71.8	108	56.0	84.0	92.0	138	80.9	122
	26	80.0	120	66.4	99.6	51.8	77.6	85.1	128	74.8	112
	27	74.2	111	61.6	92.4	48.0	72.0	78.9	119	69.4	104
	28	69.0	103	57.3	85.9	44.6	66.9	73.4	110	64.5	96.9
	29	64.3	96.5	53.4	80.1	41.6	62.4	68.4	103	60.1	90.4
	30	60.1	90.1	49.9	74.8	38.9	58.3	63.9	96.0	56.2	84.4
	32	52.8	79.2	43.8	65.8	34.2	51.2	56.2	84.4	49.4	74.2
	34	46.8	70.2	38.8	58.3	30.3	45.4	49.7	74.8	43.7	65.7
	36	41.7	62.6	34.6	52.0	27.0	40.5	44.4	66.7	39.0	58.6
	38	37.5	56.2	31.1	46.6	24.2	36.3				
	40	33.8	50.7	28.1	42.1	21.9	32.8				
Properties											
M_n/Ω_b	$\phi_b M_n$ kip-ft	39.5	59.3	31.0	46.6	21.7	32.7	55.3	83.2	47.8	71.8
$P_e(KL)^2/10^4$	kip-in.^{2}	1780		1470		1150		1720		1550	

ASD	LRFD
Ω_c = 2.00	ϕ_c = 0.75

[c] Shape is noncompact for compression with F_y = 46 ksi. [f] Shape is noncompact for flexure with F_y = 46 ksi.
Note: Heavy line indicates KL/r_{my} equal to or greater than 200.
Dashed line indicates the KL beyond which bare steel strength controls.

4

COMPOSITE HSS6

Table 4-15 (continued)
Available Strength in Axial Compression, kips
Concrete Filled Square HSS

F_y = 46 ksi
f'_c = 4 ksi

Shape		HSS6×6×									
		3/8		5/16		1/4		3/16		1/8	
t_{design}, in.		0.349		0.291		0.233		0.174		0.116	
Steel, lb/ft		27.5		23.3		19.0		14.5		9.86	
Design		P_n/Ω_c	$\phi_c P_n$	P_n/Ω_c	$\phi_c P_n$	P_n/Ω_c	$\phi_c P_n$	P_n/Ω_c	$\phi_c P_n$	P_n/Ω_c	$\phi_c P_n$
		ASD	LRFD	ASD	LRFD	ASD	LRFD	ASD	LRFD	ASD	LRFD
Effective length, KL (ft)	0	222	333	198	297	173	259	146	219	119	178
	6	206	310	184	276	161	241	136	204	110	165
	7	201	302	179	269	157	235	132	198	107	161
	8	195	293	174	261	152	228	128	192	104	156
	9	189	283	168	253	147	221	124	186	100	150
	10	182	272	162	243	142	213	119	179	96.2	144
	11	174	261	156	233	136	204	114	172	92.0	138
	12	166	249	149	223	130	195	109	164	87.7	132
	13	158	237	141	212	124	186	104	156	83.2	125
	14	150	225	134	201	117	176	98.5	148	78.7	118
	15	141	212	127	190	111	166	93.0	139	74.0	111
	16	133	199	119	179	104	156	87.4	131	69.4	104
	17	124	186	112	167	97.7	147	81.8	123	64.7	97.1
	18	116	174	104	156	91.3	137	76.3	114	60.1	90.2
	19	108	161	96.7	145	84.8	127	70.8	106	55.6	83.5
	20	99.4	149	89.5	134	78.6	118	65.5	98.2	51.3	76.9
	21	91.8	138	82.5	124	72.5	109	60.3	90.5	47.0	70.6
	22	84.7	127	75.7	114	66.6	99.8	55.3	82.9	42.9	64.4
	23	77.8	117	69.2	104	60.9	91.4	50.6	75.9	39.3	58.9
	24	71.4	107	63.6	95.4	55.9	83.9	46.4	69.7	36.0	54.1
	25	65.8	98.9	58.6	87.9	51.5	77.3	42.8	64.2	33.2	49.8
	26	60.8	91.4	54.2	81.3	47.7	71.5	39.6	59.4	30.7	46.1
	27	56.4	84.8	50.2	75.4	44.2	66.3	36.7	55.0	28.5	42.7
	28	52.5	78.8	46.7	70.1	41.1	61.6	34.1	51.2	26.5	39.7
	29	48.9	73.5	43.6	65.3	38.3	57.5	31.8	47.7	24.7	37.0
	30	45.7	68.7	40.7	61.0	35.8	53.7	29.7	44.6	23.1	34.6
	32	40.2	60.4	35.8	53.7	31.5	47.2	26.1	39.2	20.3	30.4
	34	35.6	53.5	31.7	47.5	27.9	41.8	23.1	34.7	18.0	26.9
	36	31.7	47.7	28.3	42.4	24.9	37.3	20.6	31.0	16.0	24.0
	38	28.5	42.8	25.4	38.1	22.3	33.5	18.5	27.8	14.4	21.6
Properties											
M_n/Ω_b	$\phi_b M_n$ kip-ft	38.7	58.2	33.7	50.7	28.2	42.4	22.2	33.4	15.7	23.6
$P_e(KL)^2/10^4$	kip-in.^{2}	1330		1200		1060		879		682	

Note: Dashed line indicates the KL beyond which bare steel strength controls.

ASD	LRFD
Ω_c = 2.00	ϕ_c = 0.75

Table 4-15 (continued)

F_y = 46 ksi
f'_c = 4 ksi

Available Strength in Axial Compression, kips

Concrete Filled Square HSS

4

COMPOSITE
HSS5$^1/_2$-HSS5

Shape		HSS5$^1/_2$×5$^1/_2$×										HSS5×5×	
		$^3/_8$		$^5/_{16}$		$^1/_4$		$^3/_{16}$		$^1/_8$		$^1/_2$	
t_{design}, in.		0.349		0.291		0.233		0.174		0.116		0.465	
Steel, lb/ft		24.9		21.2		17.3		13.3		9.01		28.4	
Design		P_n/Ω_c	$\phi_c P_n$	P_n/Ω_c	$\phi_c P_n$	P_n/Ω_c	$\phi_c P_n$	P_n/Ω_c	$\phi_c P_n$	P_n/Ω_c	$\phi_c P_n$	P_n/Ω_c	$\phi_c P_n$
		ASD	LRFD	ASD	LRFD	ASD	LRFD	ASD	LRFD	ASD	LRFD	ASD	LRFD
Effective length, KL (ft)	0	197	296	176	263	153	229	129	193	104	156	217	326
	1	197	295	175	263	152	229	128	192	103	155	216	325
	2	195	293	174	261	151	227	127	191	103	154	215	322
	3	193	290	172	258	150	224	126	189	101	152	211	318
	4	190	285	169	253	147	221	124	186	99.7	150	207	311
	5	186	279	165	248	144	216	121	182	97.5	146	202	303
	6	181	271	161	242	140	211	118	177	94.9	142	195	294
	7	175	263	156	234	136	204	115	172	91.9	138	188	283
	8	169	254	151	226	131	197	111	166	88.6	133	180	271
	9	162	243	145	217	126	189	106	159	84.9	127	171	257
	10	155	232	138	208	121	181	102	152	81.0	122	162	244
	11	147	221	132	198	115	173	96.6	145	76.9	115	152	229
	12	139	209	125	187	109	164	91.5	137	72.7	109	142	214
	13	131	197	118	176	103	154	86.3	129	68.3	103	132	199
	14	123	184	110	165	96.5	145	80.9	121	63.9	95.9	122	184
	15	115	172	103	154	90.2	135	75.6	113	59.5	89.3	112	169
	16	107	161	95.6	143	83.9	126	70.2	105	55.1	82.7	103	154
	17	99.2	149	88.4	133	77.6	116	65.0	97.5	50.8	76.2	93.2	140
	18	91.7	138	81.3	122	71.5	107	59.8	89.7	46.6	69.9	84.1	126
	19	84.5	127	74.5	112	65.6	98.4	54.8	82.2	42.5	63.8	75.5	113
	20	77.4	116	67.8	102	59.9	89.8	50.0	74.9	38.5	57.8	68.1	102
	21	70.5	106	61.6	92.7	54.3	81.4	45.3	68.0	35.0	52.4	61.8	92.9
	22	64.2	96.5	56.2	84.4	49.5	74.2	41.3	61.9	31.9	47.8	56.3	84.6
	23	58.7	88.3	51.4	77.2	45.3	67.9	37.8	56.7	29.1	43.7	51.5	77.4
	24	53.9	81.1	47.2	70.9	41.6	62.3	34.7	52.0	26.8	40.1	47.3	71.1
	25	49.7	74.7	43.5	65.4	38.3	57.5	32.0	48.0	24.7	37.0	43.6	65.5
	26	46.0	69.1	40.2	60.4	35.4	53.1	29.6	44.3	22.8	34.2	40.3	60.6
	27	42.6	64.1	37.3	56.0	32.8	49.3	27.4	41.1	21.1	31.7	37.4	56.2
	28	39.6	59.6	34.7	52.1	30.5	45.8	25.5	38.2	19.7	29.5	34.8	52.2
	29	36.9	55.5	32.3	48.6	28.5	42.7	23.8	35.6	18.3	27.5	32.4	48.7
	30	34.5	51.9	30.2	45.4	26.6	39.9	22.2	33.3	17.1	25.7	30.3	45.5
Properties													
M_n/Ω_b	$\phi_b M_n$ kip-ft	31.9	48.0	27.9	41.9	23.3	35.1	18.4	27.6	13.0	19.6	31.3	47.0
$P_e(KL)^2/10^4$	kip-in.^{2}	986		891		786		656		506		813	

ASD	LRFD
Ω_c = 2.00	ϕ_c = 0.75

Note: Dashed line indicates the KL beyond which bare steel strength controls.

4

COMPOSITE HSS5

Table 4-15 (continued)
Available Strength in Axial Compression, kips
Concrete Filled Square HSS

F_y = 46 ksi
f'_c = 4 ksi

Shape		HSS5×5×									
		3/8		5/16		1/4		3/16		1/8	
t_{design}, in.		0.349		0.291		0.233		0.174		0.116	
Steel, lb/ft		22.4		19.1		15.6		12.0		8.16	
Design		P_n/Ω_c ASD	$\phi_c P_n$ LRFD	P_n/Ω_c ASD	$\phi_c P_n$ LRFD	P_n/Ω_c ASD	$\phi_c P_n$ LRFD	P_n/Ω_c ASD	$\phi_c P_n$ LRFD	P_n/Ω_c ASD	$\phi_c P_n$ LRFD
Effective length, KL (ft)	0	173	260	154	231	134	201	112	168	89.9	135
	1	173	259	154	230	133	200	112	168	89.7	134
	2	171	257	152	228	132	198	111	166	88.9	133
	3	169	253	150	225	130	196	109	164	87.6	131
	4	165	248	147	221	128	192	107	161	85.8	129
	5	161	242	143	215	125	187	104	157	83.5	125
	6	156	234	139	208	121	181	101	152	80.9	121
	7	150	225	134	200	116	175	97.6	146	77.8	117
	8	144	215	128	192	111	167	93.5	140	74.4	112
	9	137	205	122	183	106	159	89.1	134	70.8	106
	10	129	194	115	173	101	151	84.5	127	66.9	100
	11	122	183	109	163	94.8	142	79.6	119	62.9	94.4
	12	114	172	102	152	88.8	133	74.5	112	58.8	88.2
	13	107	160	94.4	142	82.7	124	69.4	104	54.6	81.9
	14	98.9	149	87.3	131	76.6	115	64.3	96.5	50.4	75.6
	15	91.3	137	80.3	120	70.5	106	59.2	88.8	46.3	69.4
	16	83.8	126	73.4	110	64.5	96.8	54.2	81.4	42.2	63.4
	17	76.4	115	66.7	100	58.8	88.1	49.4	74.1	38.3	57.5
	18	69.4	104	60.7	91.3	53.2	79.8	44.7	67.1	34.5	51.8
	19	62.5	93.9	54.9	82.5	47.8	71.7	40.2	60.3	31.0	46.5
	20	56.4	84.8	49.6	74.5	43.1	64.7	36.3	54.4	28.0	41.9
	21	51.2	76.9	44.9	67.6	39.1	58.7	32.9	49.3	25.4	38.0
	22	46.6	70.0	41.0	61.5	35.6	53.5	30.0	45.0	23.1	34.7
	23	42.6	64.1	37.5	56.3	32.6	48.9	27.4	41.1	21.1	31.7
	24	39.2	58.9	34.4	51.7	29.9	44.9	25.2	37.8	19.4	29.1
	25	36.1	54.2	31.7	47.7	27.6	41.4	23.2	34.8	17.9	26.8
	26	33.4	50.2	29.3	44.1	25.5	38.3	21.5	32.2	16.5	24.8
	27	30.9	46.5	27.2	40.9	23.7	35.5	19.9	29.8	15.3	23.0
	28	28.8	43.2	25.3	38.0	22.0	33.0	18.5	27.8	14.3	21.4
	29	26.8	40.3	23.6	35.4	20.5	30.8	17.2	25.9	13.3	19.9
	30	25.1	37.7	22.0	33.1	19.2	28.8	16.1	24.2	12.4	18.6
Properties											
M_n/Ω_b	$\phi_b M_n$ kip-ft	25.7	38.6	22.5	33.7	18.9	28.4	14.9	22.5	10.6	16.0
$P_e(KL)^2/10^4$	kip-in.^{2}	708		641		566		476		367	

ASD	LRFD
Ω_c = 2.00	ϕ_c = 0.75

Note: Dashed line indicates the KL beyond which bare steel strength controls.

Table 4-15 (continued)

Available Strength in Axial Compression, kips

Concrete Filled Square HSS

F_y = 46 ksi
f'_c = 4 ksi

4 COMPOSITE HSS4$^1/_2$

Shape		HSS4$^1/_2$×4$^1/_2$×											
		$^1/_2$		$^3/_8$		$^5/_{16}$		$^1/_4$		$^3/_{16}$		$^1/_8$	
t_{design}, in.		0.465		0.349		0.291		0.233		0.174		0.116	
Steel, lb/ft		25.0		19.8		17.0		13.9		10.7		7.31	
Design		P_n/Ω_c ASD	$\phi_c P_n$ LRFD	P_n/Ω_c ASD	$\phi_c P_n$ LRFD	P_n/Ω_c ASD	$\phi_c P_n$ LRFD	P_n/Ω_c ASD	$\phi_c P_n$ LRFD	P_n/Ω_c ASD	$\phi_c P_n$ LRFD	P_n/Ω_c ASD	$\phi_c P_n$ LRFD
Effective length, KL (ft)	0	191	288	151	227	134	200	116	174	96.7	145	76.9	115
	1	191	287	150	226	133	200	115	173	96.3	144	76.7	115
	2	189	283	149	224	132	198	114	171	95.3	143	75.8	114
	3	185	278	146	220	129	194	112	168	93.7	140	74.5	112
	4	180	271	143	215	126	189	110	164	91.4	137	72.6	109
	5	174	262	138	208	122	183	106	159	88.6	133	70.3	105
	6	167	252	133	200	117	176	102	153	85.2	128	67.6	101
	7	159	240	127	191	112	168	97.4	146	81.5	122	64.5	96.8
	8	151	227	121	182	106	159	92.4	139	77.3	116	61.1	91.7
	9	141	213	114	171	99.8	150	87.0	130	72.9	109	57.5	86.2
	10	132	198	107	160	93.2	140	81.3	122	68.2	102	53.7	80.5
	11	122	183	99.2	149	86.4	130	75.5	113	63.4	95.0	49.8	74.7
	12	112	168	91.5	138	79.6	120	69.6	104	58.5	87.7	45.8	68.7
	13	102	153	83.9	126	73.2	110	63.7	95.5	53.6	80.4	41.9	62.8
	14	92.0	138	76.4	115	66.8	100	57.9	86.8	48.8	73.2	38.0	57.0
	15	82.6	124	69.1	104	60.6	91.1	52.2	78.3	44.1	66.1	34.2	51.3
	16	73.5	110	62.0	93.2	54.7	82.1	46.8	70.2	39.6	59.3	30.6	45.9
	17	65.1	97.8	55.2	83.0	48.8	73.4	41.5	62.4	35.2	52.8	27.1	40.7
	18	58.0	87.2	49.2	74.0	43.6	65.5	37.0	55.6	31.4	47.1	24.2	36.3
	19	52.1	78.3	44.2	66.4	39.1	58.8	33.3	49.9	28.2	42.2	21.7	32.6
	20	47.0	70.7	39.9	59.9	35.3	53.0	30.0	45.1	25.4	38.1	19.6	29.4
	21	42.6	64.1	36.2	54.4	32.0	48.1	27.2	40.9	23.1	34.6	17.8	26.7
	22	38.9	58.4	33.0	49.5	29.2	43.8	24.8	37.3	21.0	31.5	16.2	24.3
	23	35.5	53.4	30.2	45.3	26.7	40.1	22.7	34.1	19.2	28.8	14.8	22.2
	24	32.6	49.1	27.7	41.6	24.5	36.8	20.8	31.3	17.7	26.5	13.6	20.4
	25	30.1	45.2	25.5	38.4	22.6	34.0	19.2	28.8	16.3	24.4	12.6	18.8
	26	27.8	41.8	23.6	35.5	20.9	31.4	17.8	26.7	15.0	22.6	11.6	17.4
	27			21.9	32.9	19.4	29.1	16.5	24.7	13.9	20.9	10.8	16.1
	28					18.0	27.1	15.3	23.0	13.0	19.5	10.0	15.0
	29									12.1	18.1	9.33	14.0
Properties													
M_n/Ω_b ASD; $\phi_b M_n$ LRFD	kip-ft	24.3	36.5	20.2	30.3	17.7	26.6	15.0	22.5	11.9	17.8	8.49	12.8
$P_e(KL)^2/10^4$	kip-in.^{2}	558		491		446		394		334		258	

ASD	LRFD
Ω_c = 2.00	ϕ_c = 0.75

Note: Heavy line indicates KL/r equal to or greater than 200.
Dashed line indicates the KL beyond which bare steel strength controls.

4

COMPOSITE HSS4

Table 4-15 (continued)
Available Strength in Axial Compression, kips
Concrete Filled Square HSS

F_y = 46 ksi
f'_c = 4 ksi

Shape		HSS4×4×											
		1/2		3/8		5/16		1/4		3/16		1/8	
t_{design}, in.		0.465		0.349		0.291		0.233		0.174		0.116	
Steel, lb/ft		21.6		17.3		14.8		12.2		9.42		6.46	
Design		P_n/Ω_c ASD	$\phi_c P_n$ LRFD	P_n/Ω_c ASD	$\phi_c P_n$ LRFD	P_n/Ω_c ASD	$\phi_c P_n$ LRFD	P_n/Ω_c ASD	$\phi_c P_n$ LRFD	P_n/Ω_c ASD	$\phi_c P_n$ LRFD	P_n/Ω_c ASD	$\phi_c P_n$ LRFD
Effective length, KL (ft)	0	166	249	132	198	114	171	98.7	148	82.0	123	64.8	97.2
	1	165	248	131	197	114	170	98.2	147	81.6	122	64.5	96.8
	2	163	244	129	194	112	168	96.9	145	80.5	121	63.7	95.5
	3	159	239	126	190	109	164	94.7	142	78.8	118	62.2	93.4
	4	153	231	123	184	106	159	91.8	138	76.4	115	60.3	90.5
	5	147	221	118	177	102	152	88.1	132	73.4	110	57.9	86.9
	6	139	209	112	168	96.5	145	83.8	126	69.9	105	55.1	82.7
	7	131	196	106	159	91.2	137	79.1	119	66.0	99.0	52.0	78.0
	8	121	182	98.8	149	85.4	128	73.9	111	61.8	92.6	48.6	72.9
	9	112	168	91.6	138	79.3	119	68.4	103	57.3	85.9	45.0	67.5
	10	102	153	84.1	126	73.0	110	62.8	94.2	52.7	79.0	41.3	62.0
	11	92.0	138	76.5	115	66.6	100	57.1	85.7	48.0	72.0	37.6	56.4
	12	82.2	124	69.0	104	60.3	90.6	51.5	77.2	43.4	65.0	33.9	50.8
	13	72.8	109	61.7	92.8	54.0	81.2	46.0	68.9	38.8	58.2	30.3	45.4
	14	63.7	95.8	54.7	82.2	48.0	72.2	40.8	61.3	34.5	51.7	26.8	40.2
	15	55.5	83.5	47.9	72.0	42.2	63.5	36.1	54.3	30.2	45.4	23.5	35.2
	16	48.8	73.3	42.1	63.3	37.1	55.8	31.7	47.7	26.6	39.9	20.6	30.9
	17	43.2	65.0	37.3	56.1	32.9	49.4	28.1	42.3	23.5	35.3	18.3	27.4
	18	38.6	58.0	33.3	50.0	29.3	44.1	25.1	37.7	21.0	31.5	16.3	24.4
	19	34.6	52.0	29.9	44.9	26.3	39.6	22.5	33.8	18.8	28.3	14.6	21.9
	20	31.2	46.9	27.0	40.5	23.8	35.7	20.3	30.5	17.0	25.5	13.2	19.8
	21	28.3	42.6	24.4	36.7	21.5	32.4	18.4	27.7	15.4	23.1	12.0	18.0
	22	25.8	38.8	22.3	33.5	19.6	29.5	16.8	25.2	14.1	21.1	10.9	16.4
	23	23.6	35.5	20.4	30.6	18.0	27.0	15.4	23.1	12.9	19.3	9.98	15.0
	24			18.7	28.1	16.5	24.8	14.1	21.2	11.8	17.7	9.17	13.8
	25							13.0	19.5	10.9	16.3	8.45	12.7
	26											7.81	11.7
Properties													
M_n/Ω_b	$\phi_b M_n$ kip-ft	18.2	27.4	15.3	23.0	13.5	20.3	11.5	17.3	9.17	13.8	6.59	9.90
$P_e(KL)^2/10^4$	kip-in.^{2}	362		325		296		263		223		173	

ASD	LRFD
$\Omega_c = 2.00$	$\phi_c = 0.75$

Note: Heavy line indicates KL/r equal to or greater than 200.
Dashed line indicates the KL beyond which bare steel strength controls.

F_y = 46 ksi
f'_c = 4 ksi

Table 4-15 (continued)
Available Strength in Axial Compression, kips
Concrete Filled Square HSS

4
COMPOSITE
HSS3 1/2

Shape		HSS3 1/2×3 1/2×									
		3/8		5/16		1/4		3/16		1/8	
t_{design}, in.		0.349		0.291		0.233		0.174		0.116	
Steel, lb/ft		14.7		12.7		10.5		8.15		5.61	
Design		P_n/Ω_c ASD	$\phi_c P_n$ LRFD	P_n/Ω_c ASD	$\phi_c P_n$ LRFD	P_n/Ω_c ASD	$\phi_c P_n$ LRFD	P_n/Ω_c ASD	$\phi_c P_n$ LRFD	P_n/Ω_c ASD	$\phi_c P_n$ LRFD
Effective length, KL (ft)	0	113	169	97.0	146	82.5	124	68.4	103	53.6	80.3
	1	112	168	96.4	145	82.0	123	68.0	102	53.2	79.9
	2	110	165	94.7	142	80.5	121	66.8	100	52.3	78.5
	3	107	160	92.0	138	78.2	117	64.9	97.3	50.8	76.2
	4	102	154	88.3	133	74.9	112	62.3	93.4	48.8	73.2
	5	96.7	145	83.8	126	71.0	107	59.1	88.6	46.3	69.4
	6	90.4	136	78.6	118	66.5	99.7	55.4	83.1	43.4	65.1
	7	83.5	126	72.9	110	61.5	92.2	51.4	77.0	40.3	60.4
	8	76.2	115	66.8	100	56.2	84.4	47.1	70.6	36.9	55.3
	9	68.7	103	60.5	90.9	51.1	76.8	42.6	63.9	33.4	50.1
	10	61.2	92.0	54.2	81.4	46.0	69.1	38.1	57.2	29.9	44.9
	11	53.8	80.9	47.9	72.1	40.9	61.5	33.7	50.6	26.5	39.7
	12	46.8	70.3	41.9	63.0	36.0	54.1	29.5	44.3	23.1	34.7
	13	40.1	60.3	36.2	54.4	31.3	47.1	25.4	38.2	20.0	30.0
	14	34.6	52.0	31.2	46.9	27.0	40.6	21.9	32.9	17.2	25.8
	15	30.1	45.3	27.2	40.8	23.5	35.4	19.1	28.7	15.0	22.5
	16	26.5	39.8	23.9	35.9	20.7	31.1	16.8	25.2	13.2	19.8
	17	23.5	35.2	21.2	31.8	18.3	27.5	14.9	22.3	11.7	17.5
	18	20.9	31.4	18.9	28.4	16.3	24.6	13.3	19.9	10.4	15.6
	19	18.8	28.2	16.9	25.5	14.7	22.0	11.9	17.9	9.35	14.0
	20	16.9	25.5	15.3	23.0	13.2	19.9	10.8	16.1	8.44	12.7
	21	15.4	23.1	13.9	20.8	12.0	18.0	9.75	14.6	7.65	11.5
	22					10.9	16.4	8.89	13.3	6.97	10.5
Properties											
M_n/Ω_b	$\phi_b M_n$ kip-ft	11.2	16.8	10.0	15.0	8.51	12.8	6.83	10.3	4.92	7.39
$P_e(KL)^2/10^4$	kip-in.^{2}	201		185		166		141		111	

ASD	LRFD
Ω_c = 2.00	ϕ_c = 0.75

Note: Heavy line indicates KL/r equal to or greater than 200.
Dashed line indicates the KL beyond which bare steel strength controls.

4

COMPOSITE HSS3

Table 4-15 (continued)

Available Strength in Axial Compression, kips

Concrete Filled Square HSS

F_y = 46 ksi

f'_c = 4 ksi

Shape		HSS3×3×									
		3/8		5/16		1/4		3/16		1/8	
t_{design}, in.		0.349		0.291		0.233		0.174		0.116	
Steel, lb/ft		12.2		10.6		8.81		6.87		4.75	
Design		P_n/Ω_c ASD	$\phi_c P_n$ LRFD	P_n/Ω_c ASD	$\phi_c P_n$ LRFD	P_n/Ω_c ASD	$\phi_c P_n$ LRFD	P_n/Ω_c ASD	$\phi_c P_n$ LRFD	P_n/Ω_c ASD	$\phi_c P_n$ LRFD
Effective length, KL (ft)	0	93.4	140	81.0	122	67.2	101	55.4	83.1	42.9	64.4
	1	92.6	139	80.3	121	66.7	100	54.9	82.4	42.6	63.9
	2	90.2	136	78.3	118	65.1	97.9	53.6	80.4	41.6	62.4
	3	86.4	130	75.1	113	62.6	94.1	51.5	77.3	40.0	60.0
	4	81.3	122	70.9	107	59.3	89.1	48.7	73.0	37.8	56.8
	5	75.3	113	65.8	98.9	55.2	83.0	45.3	67.9	35.3	52.9
	6	68.5	103	60.1	90.3	50.6	76.1	41.5	62.2	32.3	48.5
	7	61.2	92.0	53.9	81.0	45.7	68.7	37.4	56.0	29.2	43.8
	8	53.8	80.8	47.6	71.5	40.6	61.1	33.1	49.7	26.0	38.9
	9	46.4	69.8	41.3	62.1	35.6	53.4	28.9	43.3	22.7	34.1
	10	39.4	59.3	35.3	53.0	30.6	46.0	24.8	37.2	19.6	29.4
	11	32.9	49.4	29.6	44.5	25.9	39.0	21.1	31.8	16.6	24.9
	12	27.6	41.5	24.9	37.4	21.8	32.8	17.8	26.8	13.9	20.9
	13	23.5	35.4	21.2	31.8	18.6	27.9	15.2	22.8	11.9	17.8
	14	20.3	30.5	18.3	27.4	16.0	24.1	13.1	19.7	10.2	15.4
	15	17.7	26.6	15.9	23.9	13.9	21.0	11.4	17.1	8.92	13.4
	16	15.5	23.3	14.0	21.0	12.3	18.4	10.0	15.1	7.84	11.8
	17	13.8	20.7	12.4	18.6	10.9	16.3	8.87	13.3	6.94	10.4
	18			11.0	16.6	9.69	14.6	7.91	11.9	6.19	9.29
	19							7.10	10.7	5.56	8.34
Properties											
M_n/Ω_b	$\phi_b M_n$ kip-ft	7.69	11.6	6.92	10.4	5.98	8.99	4.83	7.26	3.53	5.30
$P_e(KL)^2/10^4$	kip-in.^{2}	115		107		96.9		83.1		65.9	
ASD	LRFD	Note: Heavy line indicates KL/r equal to or greater than 200.									
Ω_c = 2.00	ϕ_c = 0.75	Dashed line indicates the KL beyond which bare steel strength controls.									

F_y = 46 ksi
f'_c = 4 ksi

Table 4-15 (continued)
Available Strength in Axial Compression, kips
Concrete Filled Square HSS

4

COMPOSITE
HSS2½-HSS2¼

Shape		HSS2½×2½×								HSS2¼×2¼×	
		5/16		1/4		3/16		1/8		1/4	
t_{design}, in.		0.291		0.233		0.174		0.116		0.233	
Steel, lb/ft		8.45		7.11		5.59		3.90		6.26	
Design		P_n/Ω_c ASD	$\phi_c P_n$ LRFD	P_n/Ω_c ASD	$\phi_c P_n$ LRFD	P_n/Ω_c ASD	$\phi_c P_n$ LRFD	P_n/Ω_c ASD	$\phi_c P_n$ LRFD	P_n/Ω_c ASD	$\phi_c P_n$ LRFD
Effective length, KL (ft)	0	64.7	97.3	54.3	81.6	43.2	64.9	33.3	50.0	47.9	72.0
	1	63.9	96.1	53.6	80.6	42.7	64.1	33.0	49.4	47.2	71.0
	2	61.6	92.5	51.8	77.8	41.2	61.9	31.9	47.8	45.2	67.9
	3	57.8	86.9	48.8	73.4	38.9	58.3	30.1	45.1	41.9	63.0
	4	53.0	79.6	45.0	67.6	35.8	53.7	27.8	41.7	37.8	56.7
	5	47.3	71.2	40.4	60.8	32.2	48.4	25.1	37.6	33.0	49.6
	6	41.3	62.0	35.5	53.4	28.5	42.9	22.1	33.2	28.0	42.1
	7	35.1	52.7	30.5	45.9	24.7	37.1	19.1	28.7	23.1	34.7
	8	29.1	43.7	25.6	38.5	20.9	31.5	16.1	24.2	18.4	27.7
	9	23.5	35.2	20.9	31.5	17.4	26.1	13.3	19.9	14.6	21.9
	10	19.0	28.6	17.0	25.5	14.1	21.2	10.8	16.2	11.8	17.7
	11	15.7	23.6	14.0	21.1	11.7	17.5	8.90	13.3	9.75	14.7
	12	13.2	19.8	11.8	17.7	9.80	14.7	7.48	11.2	8.19	12.3
	13	11.2	16.9	10.0	15.1	8.35	12.6	6.37	9.56	6.98	10.5
	14	9.69	14.6	8.65	13.0	7.20	10.8	5.49	8.24		
	15			7.53	11.3	6.27	9.43	4.79	7.18		
	16							4.21	6.31		
Properties											
M_n/Ω_b	$\phi_b M_n$ kip-ft	4.45	6.69	3.90	5.85	3.20	4.81	2.36	3.54	3.04	4.57
$P_e(KL)^2/10^4$	kip-in.^{2}	55.4		50.9		44.1		35.4		34.9	
ASD	LRFD	Note: Heavy line indicates KL/r equal to or greater than 200.									
Ω_c = 2.00	ϕ_c = 0.75	Dashed line indicates the KL beyond which bare steel strength controls.									

4

COMPOSITE
HSS2$^1/_4$-HSS2

Table 4-15 (continued)
Available Strength in Axial Compression, kips
Concrete Filled Square HSS

F_y = 46 ksi
f'_c = 4 ksi

Shape		HSS2$^1/_4$×2$^1/_4$×				HSS2×2×					
		$^3/_{16}$		$^1/_8$		$^1/_4$		$^3/_{16}$		$^1/_8$	
t_{design}, in.		0.174		0.116		0.233		0.174		0.116	
Steel, lb/ft		4.96		3.48		5.41		4.32		3.05	
Design		P_n/Ω_c ASD	$\phi_c P_n$ LRFD	P_n/Ω_c ASD	$\phi_c P_n$ LRFD	P_n/Ω_c ASD	$\phi_c P_n$ LRFD	P_n/Ω_c ASD	$\phi_c P_n$ LRFD	P_n/Ω_c ASD	$\phi_c P_n$ LRFD
Effective length, KL (ft)	0	37.7	56.7	28.9	43.3	41.6	62.5	32.8	49.3	24.6	36.9
	1	37.2	55.9	28.5	42.7	40.8	61.3	32.2	48.4	24.2	36.3
	2	35.7	53.6	27.3	41.0	38.5	57.8	30.5	45.8	22.9	34.3
	3	33.3	50.0	25.4	38.2	34.9	52.4	27.9	41.9	20.9	31.4
	4	30.2	45.4	23.0	34.6	30.4	45.7	24.6	36.9	18.4	27.6
	5	26.7	40.1	20.3	30.4	25.5	38.3	20.9	31.4	15.7	23.5
	6	22.9	34.4	17.4	26.0	20.6	30.9	17.1	25.7	12.8	19.3
	7	19.1	28.7	14.5	21.7	15.9	24.0	13.5	20.4	10.2	15.3
	8	15.5	23.3	11.7	17.5	12.2	18.3	10.4	15.7	7.93	11.9
	9	12.3	18.5	9.26	13.9	9.64	14.5	8.24	12.4	6.27	9.42
	10	9.97	15.0	7.50	11.3	7.81	11.7	6.67	10.0	5.08	7.63
	11	8.24	12.4	6.20	9.30	6.46	9.70	5.52	8.29	4.20	6.31
	12	6.92	10.4	5.21	7.81			4.63	6.97	3.53	5.30
	13	5.90	8.87	4.44	6.66						
	14			3.83	5.74						
Properties											
M_n/Ω_b $\phi_b M_n$	kip-ft	2.51	3.77	1.86	2.80	2.28	3.43	1.91	2.87	1.43	2.15
$P_e(KL)^2/10^4$	kip-in.^{2}	30.6		24.6		22.7		20.2		16.4	
ASD	LRFD	Note: Heavy line indicates KL/r equal to or greater than 200. Dashed line indicates the KL beyond which bare steel strength controls.									
Ω_c = 2.00	ϕ_c = 0.75										

Table 4-16
Available Strength in Axial Compression, kips
Concrete Filled Square HSS

F_y = 46 ksi
f'_c = 5 ksi

5
COMPOSITE
HSS16-HSS14

Shape		HSS16×16×						HSS14×14×					
		1/2		3/8		5/16		5/8		1/2		3/8	
t_{design}, in.		0.465		0.349		0.291		0.581		0.465		0.349	
Steel, lb/ft		103		78.5		65.9		110		89.7		68.3	
Design		P_n/Ω_c ASD	$\phi_c P_n$ LRFD	P_n/Ω_c ASD	$\phi_c P_n$ LRFD	P_n/Ω_c ASD	$\phi_c P_n$ LRFD	P_n/Ω_c ASD	$\phi_c P_n$ LRFD	P_n/Ω_c ASD	$\phi_c P_n$ LRFD	P_n/Ω_c ASD	$\phi_c P_n$ LRFD
Effective length, KL (ft)	0	1130	1700	992	1490	921	1380	1050	1570	928	1390	806	1210
	6	1120	1680	981	1470	911	1370	1030	1550	916	1370	794	1190
	7	1120	1680	977	1470	907	1360	1030	1540	911	1370	790	1190
	8	1110	1670	972	1460	903	1350	1020	1530	906	1360	786	1180
	9	1110	1660	967	1450	898	1350	1020	1520	900	1350	780	1170
	10	1100	1650	962	1440	892	1340	1010	1510	894	1340	774	1160
	11	1090	1640	955	1430	886	1330	1000	1500	886	1330	768	1150
	12	1090	1630	948	1420	880	1320	991	1490	879	1320	761	1140
	13	1080	1620	941	1410	873	1310	982	1470	870	1310	754	1130
	14	1070	1600	933	1400	865	1300	972	1460	861	1290	746	1120
	15	1060	1590	925	1390	857	1290	961	1440	852	1280	737	1110
	16	1050	1580	916	1370	849	1270	950	1430	842	1260	728	1090
	17	1040	1560	907	1360	840	1260	939	1410	831	1250	718	1080
	18	1030	1540	897	1350	830	1250	926	1390	820	1230	709	1060
	19	1020	1530	887	1330	820	1230	913	1370	809	1210	698	1050
	20	1010	1510	876	1310	810	1220	900	1350	797	1190	687	1030
	21	994	1490	865	1300	800	1200	886	1330	784	1180	676	1010
	22	981	1470	853	1280	789	1180	872	1310	771	1160	665	997
	23	968	1450	842	1260	777	1170	857	1290	758	1140	653	980
	24	955	1430	829	1240	766	1150	842	1260	745	1120	641	962
	25	941	1410	817	1230	754	1130	827	1240	731	1100	629	943
	26	927	1390	804	1210	742	1110	811	1220	717	1070	616	924
	27	912	1370	791	1190	729	1090	795	1190	702	1050	603	905
	28	897	1350	777	1170	716	1070	779	1170	688	1030	590	885
	29	882	1320	764	1150	703	1050	762	1140	673	1010	577	866
	30	867	1300	750	1120	690	1040	746	1120	658	987	564	845
	32	836	1250	722	1080	663	995	712	1070	627	941	537	805
	34	803	1210	693	1040	636	954	677	1020	596	894	509	764
	36	771	1160	663	995	608	912	642	963	565	848	482	722
	38	737	1110	633	950	580	869	607	911	534	801	454	681
	40	704	1060	603	905	551	827	573	859	503	755	427	640
Properties													
M_n/Ω_b	$\phi_b M_n$ kip-ft	428	644	336	506	287	431	384	577	321	482	252	379
$P_e(KL)^2/10^4$	kip-in.^{2}	45900		38500		34600		33500		29200		24500	

ASD	LRFD
Ω_c = 2.00	ϕ_c = 0.75

5

COMPOSITE
HSS14-HSS12

Table 4-16 (continued)
Available Strength in Axial Compression, kips
Concrete Filled Square HSS

F_y = 46 ksi
f'_c = 5 ksi

Shape		HSS14×14×		HSS12×12×									
		5/16		5/8		1/2		3/8		5/16		1/4	
t_{design}, in.		0.291		0.581		0.465		0.349		0.291		0.233	
Steel, lb/ft		57.4		93.3		76.1		58.1		48.9		39.4	
Design		P_n/Ω_c ASD	$\phi_c P_n$ LRFD	P_n/Ω_c ASD	$\phi_c P_n$ LRFD	P_n/Ω_c ASD	$\phi_c P_n$ LRFD	P_n/Ω_c ASD	$\phi_c P_n$ LRFD	P_n/Ω_c ASD	$\phi_c P_n$ LRFD	P_n/Ω_c ASD	$\phi_c P_n$ LRFD
Effective length, KL (ft)	0	744	1120	840	1260	741	1110	639	959	585	878	531	796
	6	733	1100	825	1240	727	1090	627	941	574	861	520	780
	7	729	1090	819	1230	722	1080	623	934	570	855	517	775
	8	724	1090	813	1220	717	1080	618	927	565	848	512	768
	9	719	1080	806	1210	710	1070	612	918	560	840	507	761
	10	714	1070	798	1200	704	1060	606	909	554	831	502	753
	11	708	1060	789	1180	696	1040	599	899	548	822	496	744
	12	701	1050	780	1170	688	1030	592	888	541	812	490	734
	13	694	1040	770	1150	679	1020	584	877	534	801	483	724
	14	686	1030	759	1140	670	1000	576	864	526	789	475	713
	15	678	1020	748	1120	660	990	567	851	518	777	468	702
	16	670	1000	736	1100	649	974	558	837	509	764	460	689
	17	661	991	724	1090	638	958	548	822	500	750	451	677
	18	651	977	711	1070	627	941	538	807	491	736	442	664
	19	642	962	697	1050	615	923	528	792	481	721	433	650
	20	631	947	684	1030	603	904	517	775	471	706	424	636
	21	621	931	669	1000	590	886	506	759	460	691	414	621
	22	610	915	655	982	577	866	494	742	450	675	404	606
	23	599	898	640	959	564	846	483	724	439	658	394	591
	24	588	881	624	936	551	826	471	706	428	642	384	576
	25	576	864	609	913	537	806	459	688	417	625	373	560
	26	564	846	593	889	523	785	447	670	405	608	363	544
	27	552	828	577	865	509	764	434	651	394	591	352	528
	28	540	810	561	841	495	742	422	632	382	573	341	512
	29	527	791	545	817	481	721	409	614	371	556	331	496
	30	515	772	528	792	466	699	396	595	359	538	320	480
	32	489	734	496	743	437	656	371	557	336	503	298	447
	34	464	695	463	694	409	613	346	519	312	468	277	415
	36	438	657	431	646	380	571	321	482	289	434	256	384
	38	412	618	399	599	352	529	297	446	267	401	235	353
	40	387	580	368	552	325	488	273	410	245	368	216	323
Properties													
M_n/Ω_b	$\phi_b M_n$ kip-ft	216	324	274	412	229	344	181	272	155	233	128	193
$P_e(KL)^2/10^4$	kip-in.^{2}	21900		19600		17400		14500		13000		11400	

ASD	LRFD
Ω_c = 2.00	ϕ_c = 0.75

F_y = 46 ksi
f'_c = 5 ksi

Table 4-16 (continued)
Available Strength in Axial Compression, kips
Concrete Filled Square HSS

5
COMPOSITE
HSS10

Shape		HSS10×10×											
		5/8		1/2		3/8		5/16		1/4		3/16	
t_{design}, in.		0.581		0.465		0.349		0.291		0.233		0.174	
Steel, lb/ft		76.3		62.5		47.9		40.4		32.6		24.7	
Design		P_n/Ω_c ASD	$\phi_c P_n$ LRFD	P_n/Ω_c ASD	$\phi_c P_n$ LRFD	P_n/Ω_c ASD	$\phi_c P_n$ LRFD	P_n/Ω_c ASD	$\phi_c P_n$ LRFD	P_n/Ω_c ASD	$\phi_c P_n$ LRFD	P_n/Ω_c ASD	$\phi_c P_n$ LRFD
Effective length, KL (ft)	0	648	973	570	855	487	731	444	665	399	599	353	530
	6	631	947	555	833	474	711	432	647	388	582	343	515
	7	625	938	550	825	470	705	427	641	384	576	339	509
	8	618	927	544	815	464	697	422	634	379	569	335	503
	9	610	915	537	805	459	688	417	625	374	562	330	496
	10	602	902	529	794	452	678	411	616	369	553	325	488
	11	592	888	521	782	445	668	404	607	363	544	320	479
	12	582	873	512	768	438	656	397	596	356	534	314	470
	13	571	857	503	754	429	644	390	585	349	524	307	461
	14	560	840	493	739	421	631	382	573	342	513	300	451
	15	548	822	482	724	412	618	374	560	334	501	293	440
	16	535	803	472	707	402	604	365	547	326	489	286	429
	17	522	783	460	690	393	589	356	534	318	477	278	417
	18	509	763	448	672	382	574	346	519	309	464	270	405
	19	495	742	436	654	372	558	337	505	300	450	262	393
	20	481	721	424	636	361	542	327	490	291	437	254	380
	21	466	699	411	617	350	526	317	475	282	423	245	368
	22	451	677	398	597	339	509	306	460	272	409	237	355
	23	436	655	385	578	328	492	296	444	263	394	228	342
	24	421	632	372	558	317	475	286	428	253	380	219	329
	25	406	609	359	538	305	458	275	413	244	366	210	316
	26	391	586	345	518	294	441	265	397	234	351	202	303
	27	376	564	332	498	282	424	254	381	225	337	193	290
	28	361	541	319	478	271	407	244	365	215	323	185	277
	29	346	518	306	458	260	390	233	350	206	308	176	264
	30	331	496	293	439	249	373	223	334	196	294	168	251
	32	301	452	267	400	227	340	203	304	178	267	151	227
	34	273	410	242	363	205	308	183	275	160	241	135	203
	36	245	368	218	327	185	277	164	247	143	215	121	181
	38	220	330	195	293	166	248	148	221	129	193	108	163
	40	199	298	176	265	149	224	133	200	116	174	97.8	147
Properties													
M_n/Ω_b $\phi_b M_n$	kip-ft	182	273	153	230	122	183	105	157	86.9	131	67.4	101
$P_e(KL)^2/10^4$	kip-in.^{2}	10400		9270		7850		7000		6100		5140	
ASD	LRFD												
Ω_c = 2.00	ϕ_c = 0.75												

5

COMPOSITE HSS9

Table 4-16 (continued)

Available Strength in Axial Compression, kips

F_y = 46 ksi

f'_c = 5 ksi

Concrete Filled Square HSS

Shape		HSS9×9×											
		5/8		1/2		3/8		5/16		1/4		3/16	
t_{design}, in.		0.581		0.465		0.349		0.291		0.233		0.174	
Steel, lb/ft		67.8		55.7		42.8		36.1		29.2		22.2	
Design		P_n/Ω_c ASD	$\phi_c P_n$ LRFD	P_n/Ω_c ASD	$\phi_c P_n$ LRFD	P_n/Ω_c ASD	$\phi_c P_n$ LRFD	P_n/Ω_c ASD	$\phi_c P_n$ LRFD	P_n/Ω_c ASD	$\phi_c P_n$ LRFD	P_n/Ω_c ASD	$\phi_c P_n$ LRFD
Effective length, KL (ft)	0	560	840	490	735	418	626	379	568	339	509	298	448
	6	542	812	474	711	404	606	366	549	328	492	288	432
	7	535	803	468	703	399	599	362	543	324	486	284	426
	8	528	792	462	693	394	591	357	535	319	479	280	420
	9	519	779	455	682	388	582	351	527	314	471	275	413
	10	510	765	447	671	381	572	345	517	308	463	270	405
	11	500	751	439	658	374	561	338	507	302	453	264	396
	12	490	735	429	644	366	549	331	497	296	444	258	387
	13	479	718	420	630	358	537	324	485	289	433	252	378
	14	467	700	409	614	349	524	316	473	281	422	245	368
	15	454	681	399	598	340	510	307	461	274	410	238	357
	16	441	662	388	581	330	496	298	448	266	398	231	346
	17	428	642	376	564	321	481	289	434	257	386	223	335
	18	414	621	364	546	311	466	280	420	249	373	216	323
	19	400	600	352	528	300	450	271	406	240	360	208	312
	20	386	579	340	510	290	435	261	392	231	347	200	300
	21	372	557	327	491	279	419	251	377	223	334	192	288
	22	357	536	315	472	268	402	241	362	214	320	184	275
	23	342	514	302	453	257	386	232	347	205	307	176	263
	24	328	492	289	434	247	370	222	332	196	293	167	251
	25	313	470	277	415	236	354	212	318	187	280	159	239
	26	299	448	264	396	225	338	202	303	178	267	151	227
	27	284	426	251	377	214	322	192	288	169	253	144	215
	28	270	405	239	359	204	306	183	274	160	240	136	204
	29	256	384	227	340	194	290	173	260	152	228	128	193
	30	242	364	215	323	183	275	164	246	143	215	121	181
	32	218	328	192	288	164	246	146	219	127	191	107	160
	34	195	293	170	255	145	218	129	194	113	169	94.5	142
	36	174	262	152	227	129	194	115	173	101	151	84.3	126
	38	156	235	136	204	116	174	104	155	90.2	135	75.6	113
	40	141	212	123	184	105	157	93.4	140	81.4	122	68.3	102
Properties													
M_n/Ω_b	$\phi_b M_n$ kip-ft	143	215	121	182	96.6	145	83.2	125	69.1	104	53.9	81.0
$P_e(KL)^2/10^4$	kip-in.^{2}	7260		6450		5510		4910		4280		3590	

ASD	LRFD
Ω_c = 2.00	ϕ_c = 0.75

Note: Dashed line indicates the KL beyond which bare steel strength controls.

Table 4-16 (continued)

F_y = 46 ksi
f'_c = 5 ksi

Available Strength in Axial Compression, kips

Concrete Filled Square HSS

5
COMPOSITE HSS8

Shape		HSS8×8×									
		5/8		1/2		3/8		5/16		1/4	
t_{design}, in.		0.581		0.465		0.349		0.291		0.233	
Steel, lb/ft		59.3		48.9		37.7		31.8		25.8	
Design		P_n/Ω_c ASD	$\phi_c P_n$ LRFD	P_n/Ω_c ASD	$\phi_c P_n$ LRFD	P_n/Ω_c ASD	$\phi_c P_n$ LRFD	P_n/Ω_c ASD	$\phi_c P_n$ LRFD	P_n/Ω_c ASD	$\phi_c P_n$ LRFD
Effective length, KL (ft)	0	476	714	416	624	352	528	318	477	284	426
	6	456	684	399	599	338	507	305	458	272	408
	7	449	673	393	590	333	499	301	451	268	402
	8	441	661	386	579	327	491	295	443	263	394
	9	432	648	379	568	321	481	290	434	258	387
	10	422	633	370	556	314	471	283	425	252	378
	11	412	618	361	542	306	460	276	415	246	369
	12	401	601	352	528	298	448	269	404	239	359
	13	389	583	342	513	290	435	261	392	232	348
	14	377	565	331	497	281	421	253	380	225	337
	15	364	546	320	480	272	408	245	367	217	326
	16	350	526	309	463	262	393	236	354	209	314
	17	337	505	297	445	252	379	227	341	201	302
	18	323	485	285	428	242	364	218	327	193	289
	19	309	464	273	409	232	348	209	314	185	277
	20	295	443	261	391	222	333	200	300	176	264
	21	281	421	249	373	212	318	191	286	168	252
	22	267	402	236	355	202	302	181	272	159	239
	23	255	383	224	336	191	287	172	258	151	227
	24	242	364	212	318	181	272	163	244	143	214
	25	230	345	200	301	171	257	154	231	135	202
	26	217	326	189	283	161	242	145	217	127	190
	27	205	308	178	266	152	228	136	204	119	179
	28	193	290	166	250	143	214	128	192	112	167
	29	182	273	155	233	133	200	119	179	104	156
	30	170	256	145	218	124	187	112	167	97.2	146
	32	149	225	128	191	109	164	98.1	147	85.4	128
	34	132	199	113	170	96.9	145	86.9	130	75.7	114
	36	118	177	101	151	86.4	130	77.5	116	67.5	101
	38	106	159	90.5	136	77.6	116	69.5	104	60.6	90.9
	40	95.6	144	81.7	123	70.0	105	62.8	94.1	54.7	82.0
Properties											
M/Ω_b	$\phi_b M_n$ kip-ft	109	164	93.6	140	74.4	112	64.4	96.8	53.5	80.5
$P_e(KL)^2/10^4$	kip-in.^{2}	4800		4290		3680		3300		2870	
ASD	LRFD	Note: Dashed line indicates the KL beyond which bare steel strength controls.									
$\Omega_c = 2.00$	$\phi_c = 0.75$										

5

COMPOSITE
HSS8-HSS7

Table 4-16 (continued)
Available Strength in Axial Compression, kips
Concrete Filled Square HSS

F_y = 46 ksi
f'_c = 5 ksi

Shape		HSS8×8×		HSS7×7×							
		3/16		5/8		1/2		3/8		5/16	
t_{design}, in.		0.174		0.581		0.465		0.349		0.291	
Steel, lb/ft		19.6		50.8		42.1		32.6		27.6	
Design		P_n/Ω_c ASD	$\phi_c P_n$ LRFD	P_n/Ω_c ASD	$\phi_c P_n$ LRFD	P_n/Ω_c ASD	$\phi_c P_n$ LRFD	P_n/Ω_c ASD	$\phi_c P_n$ LRFD	P_n/Ω_c ASD	$\phi_c P_n$ LRFD
Effective length, KL (ft)	0	248	372	394	591	345	517	290	436	262	393
	6	237	356	372	558	326	489	275	413	248	372
	7	233	350	364	547	320	479	270	405	243	365
	8	229	343	356	534	312	468	264	395	238	357
	9	224	336	346	520	304	456	257	385	232	348
	10	219	328	336	504	295	443	250	375	225	338
	11	213	320	325	488	286	429	242	363	218	327
	12	207	311	314	470	276	414	234	350	211	316
	13	201	301	302	453	266	398	225	337	203	305
	14	194	291	290	436	255	382	216	324	195	292
	15	187	281	278	418	244	365	207	310	187	280
	16	180	270	266	399	232	348	197	296	178	267
	17	173	260	253	381	221	331	188	281	169	254
	18	166	248	241	362	209	314	178	267	161	241
	19	158	237	228	343	197	296	168	252	152	228
	20	151	226	215	324	186	279	159	238	143	215
	21	143	215	203	305	174	262	149	223	135	202
	22	136	204	191	287	163	245	140	209	126	189
	23	128	193	179	268	152	229	130	196	118	177
	24	121	182	167	251	143	214	121	182	110	165
	25	114	171	155	233	133	200	113	169	102	153
	26	107	160	144	216	124	186	104	156	94.3	141
	27	100	150	133	201	115	173	96.6	145	87.4	131
	28	93.3	140	124	186	107	161	89.8	135	81.3	122
	29	87.0	130	116	174	99.6	150	83.7	126	75.8	114
	30	81.3	122	108	162	93.1	140	78.3	117	70.8	106
	32	71.4	107	95.0	143	81.8	123	68.8	103	62.3	93.4
	34	63.3	94.9	84.1	126	72.4	109	60.9	91.4	55.1	82.7
	36	56.4	84.6	75.1	113	64.6	97.1	54.3	81.5	49.2	73.8
	38	50.6	76.0	67.4	101	58.0	87.2	48.8	73.2	44.1	66.2
	40	45.7	68.6	60.8	91.4	52.3	78.7	44.0	66.0	39.8	59.8
Properties											
M_n/Ω_b	$\phi_b M_n$ kip-ft	41.9	63.0	80.3	121	68.6	103	55.4	83.3	48.0	72.2
$P_e(KL)^2/10^4$	kip-in.^{2}	2400		3000		2690		2310		2090	
ASD	LRFD	Note: Dashed line indicates the KL beyond which bare steel strength controls.									
Ω_c = 2.00	ϕ_c = 0.75										

Table 4-16 (continued)

F_y = 46 ksi
f'_c = 5 ksi

Available Strength in Axial Compression, kips

Concrete Filled Square HSS

5

COMPOSITE
HSS7-HSS6

Shape		HSS7×7×						HSS6×6×			
		1/4		3/16		1/8[c,f]		5/8		1/2	
t_{design}, in.		0.233		0.174		0.116		0.581		0.465	
Steel, lb/ft		22.4		17.1		11.6		42.3		35.2	
Design		P_n/Ω_c ASD	$\phi_c P_n$ LRFD	P_n/Ω_c ASD	$\phi_c P_n$ LRFD	P_n/Ω_c ASD	$\phi_c P_n$ LRFD	P_n/Ω_c ASD	$\phi_c P_n$ LRFD	P_n/Ω_c ASD	$\phi_c P_n$ LRFD
Effective length, KL (ft)	0	233	349	201	302	170	255	322	484	278	417
	6	220	330	190	285	160	240	298	450	256	386
	7	216	324	186	279	156	235	291	438	251	376
	8	211	316	182	273	152	229	283	425	243	364
	9	205	308	177	266	148	222	273	410	234	351
	10	199	299	172	258	143	215	262	394	225	337
	11	193	290	166	249	138	207	251	378	215	322
	12	186	280	160	240	133	199	240	360	205	307
	13	179	269	154	231	127	191	228	342	194	291
	14	172	258	147	221	122	182	215	324	183	275
	15	165	247	141	211	116	174	203	305	173	260
	16	157	236	134	201	110	165	190	286	163	245
	17	149	224	127	191	104	156	178	267	153	230
	18	142	212	120	180	97.8	147	165	249	143	215
	19	134	201	113	170	91.8	138	153	231	133	200
	20	126	189	107	160	85.9	129	142	213	123	185
	21	118	177	99.9	150	80.1	120	130	196	114	171
	22	111	166	93.3	140	74.4	112	119	179	104	157
	23	103	155	86.8	130	68.9	103	109	163	95.6	144
	24	96.2	144	80.6	121	63.5	95.2	99.8	150	87.8	132
	25	89.1	134	74.4	112	58.5	87.8	92.0	138	80.9	122
	26	82.4	124	68.8	103	54.1	81.1	85.1	128	74.8	112
	27	76.4	115	63.8	95.7	50.2	75.2	78.9	119	69.4	104
	28	71.0	107	59.3	89.0	46.6	70.0	73.4	110	64.5	96.9
	29	66.2	99.3	55.3	82.9	43.5	65.2	68.4	103	60.1	90.4
	30	61.9	92.8	51.7	77.5	40.6	60.9	63.9	96.0	56.2	84.4
	32	54.4	81.6	45.4	68.1	35.7	53.6	56.2	84.4	49.4	74.2
	34	48.2	72.2	40.2	60.3	31.6	47.4	49.7	74.8	43.7	65.7
	36	43.0	64.4	35.9	53.8	28.2	42.3	44.4	66.7	39.0	58.6
	38	38.6	57.8	32.2	48.3	25.3	38.0				
	40	34.8	52.2	29.1	43.6	22.9	34.3				
Properties											
M_n/Ω_b[f]	$\phi_b M_n$ kip-ft	40.1	60.2	31.5	47.3	22.1	33.2	55.8	83.8	48.2	72.5
$P_e(KL)^2/10^4$	kip-in.^{2}	1830		1530		1200		1730		1570	
ASD	LRFD	[c] Shape is noncompact for compression with F_y = 46 ksi. [f] Shape is noncompact for flexure with F_y = 46 ksi.									
Ω_c = 2.00	ϕ_c = 0.75	Note: Heavy line indicates KL/r_{my} equal to or greater than 200. Dashed line indicates the KL beyond which bare steel strength controls.									

5

COMPOSITE HSS6

Table 4-16 (continued)
Available Strength in Axial Compression, kips
Concrete Filled Square HSS

F_y = 46 ksi
f'_c = 5 ksi

Shape		HSS6×6×									
		3/8		5/16		1/4		3/16		1/8	
t_{design}, in.		0.349		0.291		0.233		0.174		0.116	
Steel, lb/ft		27.5		23.3		19.0		14.5		9.86	
Design		P_n/Ω_c ASD	$\phi_c P_n$ LRFD	P_n/Ω_c ASD	$\phi_c P_n$ LRFD	P_n/Ω_c ASD	$\phi_c P_n$ LRFD	P_n/Ω_c ASD	$\phi_c P_n$ LRFD	P_n/Ω_c ASD	$\phi_c P_n$ LRFD
Effective length, KL (ft)	0	234	351	210	315	185	278	159	239	133	199
	6	217	325	195	293	172	258	148	222	122	184
	7	211	317	190	285	168	252	144	215	119	178
	8	205	307	184	276	163	244	139	209	115	172
	9	198	296	178	267	157	236	134	201	110	166
	10	190	285	171	256	151	226	129	193	106	159
	11	182	273	164	246	145	217	123	185	101	152
	12	173	260	156	234	138	207	117	176	96.0	144
	13	165	247	148	222	131	196	111	167	90.7	136
	14	156	233	140	210	124	186	105	158	85.4	128
	15	147	220	132	198	117	175	98.9	148	80.0	120
	16	137	206	124	186	110	164	92.7	139	74.6	112
	17	128	192	116	174	102	153	86.4	130	69.2	104
	18	119	179	108	162	95.2	143	80.2	120	64.0	95.9
	19	110	166	99.9	150	88.2	132	74.2	111	58.8	88.3
	20	102	153	92.1	138	81.4	122	68.3	102	53.9	80.8
	21	93.5	140	84.7	127	74.8	112	62.6	93.9	49.0	73.5
	22	85.3	128	77.3	116	68.3	103	57.1	85.6	44.7	67.0
	23	78.1	117	70.7	106	62.5	93.8	52.2	78.3	40.9	61.3
	24	71.7	108	65.0	97.5	57.4	86.1	47.9	71.9	37.5	56.3
	25	66.1	99.1	59.9	89.8	52.9	79.4	44.2	66.3	34.6	51.9
	26	61.1	91.7	55.4	83.0	48.9	73.4	40.9	61.3	32.0	48.0
	27	56.7	85.0	51.3	77.0	45.4	68.1	37.9	56.8	29.7	44.5
	28	52.7	79.0	47.7	71.6	42.2	63.3	35.2	52.8	27.6	41.4
	29	49.1	73.7	44.5	66.8	39.3	59.0	32.8	49.3	25.7	38.6
	30	45.9	68.8	41.6	62.4	36.8	55.1	30.7	46.0	24.0	36.0
	32	40.3	60.5	36.5	54.8	32.3	48.5	27.0	40.5	21.1	31.7
	34	35.7	53.6	32.4	48.6	28.6	42.9	23.9	35.8	18.7	28.1
	36	31.9	47.8	28.9	43.3	25.5	38.3	21.3	32.0	16.7	25.0
	38	28.6	42.9	25.9	38.9	22.9	34.4	19.1	28.7	15.0	22.5
Properties											
M_n/Ω_b	$\phi_b M_n$ kip-ft	39.2	58.9	34.2	51.4	28.6	43.0	22.5	33.9	16.0	24.0
$P_e(KL)^2/10^4$	kip-in.^{2}	1360		1230		1090		907		710	

ASD	LRFD
$\Omega_c = 2.00$	$\phi_c = 0.75$

F_y = 46 ksi
f'_c = 5 ksi

Table 4-16 (continued)
Available Strength in Axial Compression, kips
Concrete Filled Square HSS

5
COMPOSITE
HSS5$^1/_2$-HSS5

Shape		HSS5$^1/_2$×5$^1/_2$×										HSS5×5×	
		$^3/_8$		$^5/_{16}$		$^1/_4$		$^3/_{16}$		$^1/_8$		$^1/_2$	
t_{design}, in.		0.349		0.291		0.233		0.174		0.116		0.465	
Steel, lb/ft		24.9		21.2		17.3		13.3		9.01		28.4	
Design		P_n/Ω_c ASD	$\phi_c P_n$ LRFD	P_n/Ω_c ASD	$\phi_c P_n$ LRFD	P_n/Ω_c ASD	$\phi_c P_n$ LRFD	P_n/Ω_c ASD	$\phi_c P_n$ LRFD	P_n/Ω_c ASD	$\phi_c P_n$ LRFD	P_n/Ω_c ASD	$\phi_c P_n$ LRFD
Effective length, KL (ft)	0	207	311	186	279	163	245	140	210	116	173	217	326
	1	207	310	185	278	163	245	139	209	115	173	216	325
	2	205	307	184	276	162	243	138	208	114	171	215	322
	3	202	304	182	273	160	240	137	205	113	169	211	318
	4	199	298	179	268	157	236	134	202	111	166	207	311
	5	195	292	175	262	154	231	131	197	108	162	202	303
	6	189	284	170	255	150	225	128	192	105	158	195	294
	7	183	275	165	247	145	218	124	186	101	152	188	283
	8	177	265	159	238	140	210	119	179	97.5	146	180	271
	9	169	254	152	228	134	201	114	171	93.2	140	171	257
	10	161	242	145	218	128	192	109	163	88.7	133	162	244
	11	153	230	138	207	122	182	103	155	83.9	126	152	229
	12	145	217	130	195	115	172	97.7	146	78.9	118	142	214
	13	136	204	123	184	108	162	91.8	138	73.9	111	132	199
	14	127	191	115	172	101	152	85.8	129	68.8	103	122	184
	15	118	177	107	160	94.3	141	79.8	120	63.7	95.5	112	169
	16	109	164	98.9	148	87.4	131	73.9	111	58.7	88.0	103	154
	17	101	151	91.2	137	80.6	121	68.0	102	53.8	80.6	93.2	140
	18	92.4	139	83.6	125	74.0	111	62.4	93.5	49.0	73.5	84.1	126
	19	84.5	127	76.3	115	67.6	101	56.9	85.3	44.4	66.6	75.5	113
	20	77.4	116	69.2	104	61.3	92.0	51.5	77.2	40.1	60.1	68.1	102
	21	70.5	106	62.8	94.1	55.6	83.5	46.7	70.0	36.3	54.5	61.8	92.9
	22	64.2	96.5	57.2	85.8	50.7	76.0	42.5	63.8	33.1	49.7	56.3	84.6
	23	58.7	88.3	52.3	78.5	46.4	69.6	38.9	58.4	30.3	45.4	51.5	77.4
	24	53.9	81.1	48.1	72.1	42.6	63.9	35.8	53.6	27.8	41.7	47.3	71.1
	25	49.7	74.7	44.3	66.4	39.3	58.9	32.9	49.4	25.6	38.5	43.6	65.5
	26	46.0	69.1	40.9	61.4	36.3	54.4	30.5	45.7	23.7	35.6	40.3	60.6
	27	42.6	64.1	38.0	57.0	33.7	50.5	28.2	42.4	22.0	33.0	37.4	56.2
	28	39.6	59.6	35.3	53.0	31.3	46.9	26.3	39.4	20.4	30.7	34.8	52.2
	29	36.9	55.5	32.9	49.4	29.2	43.8	24.5	36.7	19.1	28.6	32.4	48.7
	30	34.5	51.9	30.8	46.1	27.3	40.9	22.9	34.3	17.8	26.7	30.3	45.5
Properties													
M_n/Ω_b	$\phi_b M_n$ kip-ft	32.3	48.5	28.2	42.4	23.7	35.5	18.7	28.0	13.3	19.9	31.6	47.4
$P_e(KL)^2/10^4$	kip-in.^{2}	1000		909		806		676		526		821	

ASD	LRFD
Ω_c = 2.00	ϕ_c = 0.75

Note: Dashed line indicates the KL beyond which bare steel strength controls.

5

COMPOSITE HSS5

Table 4-16 (continued)
Available Strength in Axial Compression, kips
Concrete Filled Square HSS

F_y = 46 ksi
f'_c = 5 ksi

Shape		HSS5×5×									
		3/8		5/16		1/4		3/16		1/8	
t_{design}, in.		0.349		0.291		0.233		0.174		0.116	
Steel, lb/ft		22.4		19.1		15.6		12.0		8.16	
Design		P_n/Ω_c ASD	$\phi_c P_n$ LRFD	P_n/Ω_c ASD	$\phi_c P_n$ LRFD	P_n/Ω_c ASD	$\phi_c P_n$ LRFD	P_n/Ω_c ASD	$\phi_c P_n$ LRFD	P_n/Ω_c ASD	$\phi_c P_n$ LRFD
Effective length, KL (ft)	0	181	272	162	243	142	214	121	182	99.6	149
	1	181	271	162	243	142	213	121	182	99.3	149
	2	179	269	160	241	141	211	120	180	98.3	147
	3	176	265	158	237	139	208	118	177	96.8	145
	4	173	259	155	232	136	204	116	174	94.7	142
	5	168	252	151	226	132	198	113	169	92.0	138
	6	162	244	146	219	128	192	109	164	88.9	133
	7	156	234	140	210	123	185	105	157	85.3	128
	8	149	224	134	201	118	177	100	150	81.4	122
	9	142	213	127	191	112	168	95.3	143	77.1	116
	10	134	201	120	180	106	159	90.0	135	72.7	109
	11	125	188	113	169	99.5	149	84.6	127	68.0	102
	12	117	175	105	158	93.0	139	79.0	118	63.3	94.9
	13	108	163	97.8	147	86.3	129	73.3	110	58.5	87.7
	14	99.9	150	90.2	135	79.7	120	67.6	101	53.7	80.5
	15	91.4	137	82.7	124	73.1	110	62.0	93.0	49.0	73.5
	16	83.8	126	75.4	113	66.7	100	56.5	84.8	44.4	66.7
	17	76.4	115	68.3	102	60.5	90.7	51.2	76.8	40.1	60.1
	18	69.4	104	61.4	92.0	54.4	81.7	46.1	69.1	35.8	53.7
	19	62.5	93.9	55.1	82.6	48.9	73.3	41.3	62.0	32.1	48.2
	20	56.4	84.8	49.7	74.5	44.1	66.2	37.3	56.0	29.0	43.5
	21	51.2	76.9	45.1	67.6	40.0	60.0	33.8	50.8	26.3	39.5
	22	46.6	70.0	41.1	61.6	36.4	54.7	30.8	46.2	24.0	35.9
	23	42.6	64.1	37.6	56.4	33.3	50.0	28.2	42.3	21.9	32.9
	24	39.2	58.9	34.5	51.8	30.6	45.9	25.9	38.9	20.1	30.2
	25	36.1	54.2	31.8	47.7	28.2	42.3	23.9	35.8	18.6	27.8
	26	33.4	50.2	29.4	44.1	26.1	39.1	22.1	33.1	17.2	25.7
	27	30.9	46.5	27.3	40.9	24.2	36.3	20.5	30.7	15.9	23.9
	28	28.8	43.2	25.4	38.0	22.5	33.8	19.0	28.6	14.8	22.2
	29	26.8	40.3	23.6	35.5	21.0	31.5	17.7	26.6	13.8	20.7
	30	25.1	37.7	22.1	33.1	19.6	29.4	16.6	24.9	12.9	19.3
Properties											
M_n/Ω_b; $\phi_b M_n$	kip-ft	26.0	39.0	22.7	34.1	19.2	28.8	15.2	22.8	10.8	16.3
$P_e(KL)^2/10^4$	kip-in.^{2}	719		653		579		490		381	

ASD	LRFD
Ω_c = 2.00	ϕ_c = 0.75

Note: Dashed line indicates the KL beyond which bare steel strength controls.

Table 4-16 (continued)

F_y = 46 ksi
f'_c = 5 ksi

Available Strength in Axial Compression, kips

Concrete Filled Square HSS

5
COMPOSITE
HSS4$^1/_2$

Shape		HSS4$^1/_2$×4$^1/_2$×											
		$^1/_2$		$^3/_8$		$^5/_{16}$		$^1/_4$		$^3/_{16}$		$^1/_8$	
t_{design}, in.		0.465		0.349		0.291		0.233		0.174		0.116	
Steel, lb/ft		25.0		19.8		17.0		13.9		10.7		7.31	
Design		P_n/Ω_c ASD	$\phi_c P_n$ LRFD	P_n/Ω_c ASD	$\phi_c P_n$ LRFD	P_n/Ω_c ASD	$\phi_c P_n$ LRFD	P_n/Ω_c ASD	$\phi_c P_n$ LRFD	P_n/Ω_c ASD	$\phi_c P_n$ LRFD	P_n/Ω_c ASD	$\phi_c P_n$ LRFD
Effective length, KL (ft)	0	191	288	157	235	140	210	123	184	104	156	84.7	127
	1	191	287	156	234	140	209	122	184	104	155	84.4	127
	2	189	283	154	231	138	207	121	182	102	154	83.4	125
	3	185	278	151	227	135	203	119	178	101	151	81.8	123
	4	180	271	147	221	132	198	116	174	98.1	147	79.6	119
	5	174	262	142	214	128	191	112	168	94.9	142	77.0	115
	6	167	252	137	205	123	184	108	161	91.1	137	73.8	111
	7	159	240	130	195	117	175	103	154	86.9	130	70.2	105
	8	151	227	123	184	110	166	97.0	146	82.3	123	66.3	99.4
	9	141	213	115	173	104	155	91.1	137	77.3	116	62.1	93.2
	10	132	198	107	161	96.6	145	85.0	127	72.1	108	57.7	86.6
	11	122	183	99.2	149	89.3	134	78.7	118	66.8	100	53.3	79.9
	12	112	168	91.5	138	82.0	123	72.3	108	61.4	92.1	48.8	73.2
	13	102	153	83.9	126	74.7	112	65.9	98.9	56.1	84.1	44.3	66.5
	14	92.0	138	76.4	115	67.5	101	59.7	89.5	50.8	76.2	40.0	60.0
	15	82.6	124	69.1	104	60.6	91.1	53.6	80.5	45.7	68.5	35.8	53.7
	16	73.5	110	62.0	93.2	54.7	82.1	47.8	71.8	40.8	61.2	31.7	47.6
	17	65.1	97.8	55.2	83.0	48.8	73.4	42.4	63.6	36.1	54.2	28.1	42.1
	18	58.0	87.2	49.2	74.0	43.6	65.5	37.8	56.7	32.2	48.3	25.1	37.6
	19	52.1	78.3	44.2	66.4	39.1	58.8	33.9	50.9	28.9	43.4	22.5	33.7
	20	47.0	70.7	39.9	59.9	35.3	53.0	30.6	45.9	26.1	39.1	20.3	30.4
	21	42.6	64.1	36.2	54.4	32.0	48.1	27.8	41.7	23.7	35.5	18.4	27.6
	22	38.9	58.4	33.0	49.5	29.2	43.8	25.3	38.0	21.6	32.4	16.8	25.2
	23	35.5	53.4	30.2	45.3	26.7	40.1	23.2	34.7	19.7	29.6	15.3	23.0
	24	32.6	49.1	27.7	41.6	24.5	36.8	21.3	31.9	18.1	27.2	14.1	21.1
	25	30.1	45.2	25.5	38.4	22.6	34.0	19.6	29.4	16.7	25.1	13.0	19.5
	26	27.8	41.8	23.6	35.5	20.9	31.4	18.1	27.2	15.4	23.2	12.0	18.0
	27			21.9	32.9	19.4	29.1	16.8	25.2	14.3	21.5	11.1	16.7
	28					18.0	27.1	15.6	23.4	13.3	20.0	10.4	15.5
	29									12.4	18.6	9.65	14.5
Properties													
$\phi_b M_n$	kip-ft	24.4	36.7	20.4	30.6	17.9	26.9	15.2	22.8	12.0	18.1	8.62	13.0
$P_e(KL)^2/10^4$	kip-in.^{2}	563		497		454		402		343		267	

ASD	LRFD
Ω_c = 2.00	ϕ_c = 0.75

Note: Heavy line indicates KL/r equal to or greater than 200.
Dashed line indicates the KL beyond which bare steel strength controls.

5

COMPOSITE HSS4

Table 4-16 (continued)
Available Strength in Axial Compression, kips
Concrete Filled Square HSS

F_y = 46 ksi
f'_c = 5 ksi

Shape		HSS4×4×											
		1/2		3/8		5/16		1/4		3/16		1/8	
t_{design}, in.		0.465		0.349		0.291		0.233		0.174		0.116	
Steel, lb/ft		21.6		17.3		14.8		12.2		9.42		6.46	
Design		P_n/Ω_c ASD	$\phi_c P_n$ LRFD	P_n/Ω_c ASD	$\phi_c P_n$ LRFD	P_n/Ω_c ASD	$\phi_c P_n$ LRFD	P_n/Ω_c ASD	$\phi_c P_n$ LRFD	P_n/Ω_c ASD	$\phi_c P_n$ LRFD	P_n/Ω_c ASD	$\phi_c P_n$ LRFD
Effective length, KL (ft)	0	166	249	133	199	119	178	104	156	87.6	131	70.9	106
	1	165	248	132	198	118	178	103	155	87.2	131	70.5	106
	2	163	244	130	195	117	175	102	153	86.0	129	69.5	104
	3	159	239	127	191	114	171	99.7	149	84.1	126	67.9	102
	4	153	231	123	184	110	165	96.5	145	81.4	122	65.6	98.5
	5	147	221	118	177	106	158	92.5	139	78.1	117	62.9	94.3
	6	139	209	112	168	100	150	87.8	132	74.2	111	59.7	89.5
	7	131	196	106	159	94.2	141	82.7	124	69.9	105	56.1	84.1
	8	121	182	98.8	149	87.6	131	77.1	116	65.2	97.8	52.2	78.3
	9	112	168	91.6	138	80.8	121	71.2	107	60.3	90.4	48.1	72.2
	10	102	153	84.1	126	73.8	111	65.1	97.7	55.2	82.8	44.0	66.0
	11	92.0	138	76.5	115	66.8	100	59.0	88.5	50.1	75.2	39.8	59.7
	12	82.2	124	69.0	104	60.3	90.6	53.0	79.5	45.1	67.6	35.6	53.5
	13	72.8	109	61.7	92.8	54.0	81.2	47.1	70.7	40.2	60.3	31.6	47.5
	14	63.7	95.8	54.7	82.2	48.0	72.2	41.6	62.3	35.5	53.2	27.8	41.7
	15	55.5	83.5	47.9	72.0	42.2	63.5	36.3	54.4	31.0	46.5	24.2	36.3
	16	48.8	73.3	42.1	63.3	37.1	55.8	31.9	47.8	27.2	40.8	21.3	31.9
	17	43.2	65.0	37.3	56.1	32.9	49.4	28.2	42.3	24.1	36.2	18.9	28.3
	18	38.6	58.0	33.3	50.0	29.3	44.1	25.2	37.8	21.5	32.3	16.8	25.2
	19	34.6	52.0	29.9	44.9	26.3	39.6	22.6	33.9	19.3	29.0	15.1	22.6
	20	31.2	46.9	27.0	40.5	23.8	35.7	20.4	30.6	17.4	26.1	13.6	20.4
	21	28.3	42.6	24.4	36.7	21.5	32.4	18.5	27.7	15.8	23.7	12.4	18.5
	22	25.8	38.8	22.3	33.5	19.6	29.5	16.9	25.3	14.4	21.6	11.3	16.9
	23	23.6	35.5	20.4	30.6	18.0	27.0	15.4	23.1	13.2	19.8	10.3	15.5
	24			18.7	28.1	16.5	24.8	14.2	21.2	12.1	18.1	9.46	14.2
	25							13.1	19.6	11.2	16.7	8.72	13.1
	26											8.06	12.1
Properties													
M_n/Ω_b	$\phi_b M_n$ kip-ft	18.3	27.6	15.5	23.2	13.7	20.5	11.6	17.5	9.29	14.0	6.69	10.1
$P_e(KL)^2/10^4$	kip-in.^{2}	365		328		300		268		229		179	

ASD	LRFD
Ω_c = 2.00	ϕ_c = 0.75

Note: Heavy line indicates KL/r equal to or greater than 200.
Dashed line indicates the KL beyond which bare steel strength controls.

F_y = 46 ksi
f'_c = 5 ksi

Table 4-16 (continued)
Available Strength in Axial Compression, kips
Concrete Filled Square HSS

5
COMPOSITE
HSS3$^1/_2$

Shape		HSS3$^1/_2$×3$^1/_2$×									
		$^3/_8$		$^5/_{16}$		$^1/_4$		$^3/_{16}$		$^1/_8$	
t_{design}, in.		0.349		0.291		0.233		0.174		0.116	
Steel, lb/ft		14.7		12.7		10.5		8.15		5.61	
Design		P_n/Ω_c ASD	$\phi_c P_n$ LRFD	P_n/Ω_c ASD	$\phi_c P_n$ LRFD	P_n/Ω_c ASD	$\phi_c P_n$ LRFD	P_n/Ω_c ASD	$\phi_c P_n$ LRFD	P_n/Ω_c ASD	$\phi_c P_n$ LRFD
Effective length, KL (ft)	0	113	169	98.9	148	86.4	130	72.6	109	58.1	87.1
	1	112	168	98.3	147	85.9	129	72.1	108	57.7	86.6
	2	110	165	96.4	145	84.3	126	70.8	106	56.7	85.0
	3	107	160	93.4	140	81.7	122	68.7	103	55.0	82.5
	4	102	154	89.3	134	78.2	117	65.9	98.8	52.7	79.0
	5	96.7	145	84.4	127	74.0	111	62.4	93.5	49.8	74.7
	6	90.4	136	78.7	118	69.1	104	58.3	87.5	46.6	69.9
	7	83.5	126	72.9	110	63.8	95.7	53.9	80.9	43.0	64.5
	8	76.2	115	66.8	100	58.2	87.2	49.2	73.8	39.2	58.8
	9	68.7	103	60.5	90.9	52.4	78.5	44.4	66.6	35.3	53.0
	10	61.2	92.0	54.2	81.4	46.5	69.8	39.6	59.4	31.5	47.2
	11	53.8	80.9	47.9	72.1	40.9	61.5	34.8	52.3	27.6	41.5
	12	46.8	70.3	41.9	63.0	36.0	54.1	30.3	45.5	24.0	36.0
	13	40.1	60.3	36.2	54.4	31.3	47.1	26.0	39.0	20.6	30.8
	14	34.6	52.0	31.2	46.9	27.0	40.6	22.4	33.6	17.7	26.6
	15	30.1	45.3	27.2	40.8	23.5	35.4	19.5	29.3	15.4	23.2
	16	26.5	39.8	23.9	35.9	20.7	31.1	17.2	25.7	13.6	20.4
	17	23.5	35.2	21.2	31.8	18.3	27.5	15.2	22.8	12.0	18.0
	18	20.9	31.4	18.9	28.4	16.3	24.6	13.6	20.3	10.7	16.1
	19	18.8	28.2	16.9	25.5	14.7	22.0	12.2	18.2	9.63	14.4
	20	16.9	25.5	15.3	23.0	13.2	19.9	11.0	16.5	8.69	13.0
	21	15.4	23.1	13.9	20.8	12.0	18.0	9.96	14.9	7.88	11.8
	22					10.9	16.4	9.07	13.6	7.18	10.8
Properties											
ASD $\phi_b M_n/\Omega_b$	LRFD $\phi_b M_n$ kip-ft	11.3	16.9	10.0	15.1	8.60	12.9	6.92	10.4	4.99	7.50
$P_e(KL)^2/10^4$	kip-in.^{2}	203		188		168		144		114	

ASD Ω_c = 2.00 LRFD ϕ_c = 0.75

Note: Heavy line indicates KL/r equal to or greater than 200.
Dashed line indicates the KL beyond which bare steel strength controls.

5

COMPOSITE HSS3

Table 4-16 (continued)

Available Strength in Axial Compression, kips

Concrete Filled Square HSS

F_y = 46 ksi

f'_c = 5 ksi

Shape		HSS3×3×									
		3/8		5/16		1/4		3/16		1/8	
t_{design}, in.		0.349		0.291		0.233		0.174		0.116	
Steel, lb/ft		12.2		10.6		8.81		6.87		4.75	
Design		P_n/Ω_c ASD	$\phi_c P_n$ LRFD	P_n/Ω_c ASD	$\phi_c P_n$ LRFD	P_n/Ω_c ASD	$\phi_c P_n$ LRFD	P_n/Ω_c ASD	$\phi_c P_n$ LRFD	P_n/Ω_c ASD	$\phi_c P_n$ LRFD
Effective length, KL (ft)	0	93.4	140	81.0	122	69.7	104	58.4	87.5	46.2	69.2
	1	92.6	139	80.3	121	69.1	104	57.9	86.8	45.8	68.7
	2	90.2	136	78.3	118	67.3	101	56.4	84.7	44.7	67.0
	3	86.4	130	75.1	113	64.5	96.7	54.1	81.2	42.9	64.3
	4	81.3	122	70.9	107	60.7	91.1	51.1	76.6	40.5	60.7
	5	75.3	113	65.8	98.9	56.2	84.4	47.4	71.1	37.6	56.4
	6	68.5	103	60.1	90.3	51.2	76.8	43.3	64.9	34.3	51.5
	7	61.2	92.0	53.9	81.0	45.8	68.7	38.8	58.2	30.8	46.3
	8	53.8	80.8	47.6	71.5	40.6	61.1	34.3	51.4	27.3	40.9
	9	46.4	69.8	41.3	62.1	35.6	53.4	29.7	44.6	23.7	35.6
	10	39.4	59.3	35.3	53.0	30.6	46.0	25.4	38.1	20.3	30.4
	11	32.9	49.4	29.6	44.5	25.9	39.0	21.3	31.9	17.0	25.5
	12	27.6	41.5	24.9	37.4	21.8	32.8	17.9	26.8	14.3	21.5
	13	23.5	35.4	21.2	31.8	18.6	27.9	15.2	22.9	12.2	18.3
	14	20.3	30.5	18.3	27.4	16.0	24.1	13.1	19.7	10.5	15.8
	15	17.7	26.6	15.9	23.9	13.9	21.0	11.4	17.2	9.16	13.7
	16	15.5	23.3	14.0	21.0	12.3	18.4	10.1	15.1	8.05	12.1
	17	13.8	20.7	12.4	18.6	10.9	16.3	8.91	13.4	7.13	10.7
	18			11.0	16.6	9.69	14.6	7.95	11.9	6.36	9.54
	19							7.13	10.7	5.71	8.56
Properties											
M_n/Ω_b	$\phi_b M_n$ kip-ft	7.74	11.6	6.97	10.5	6.04	9.07	4.89	7.35	3.58	5.37
$P_e(KL)^2/10^4$	kip-in.^{2}	116		108		98.1		84.6		67.7	

ASD	LRFD
Ω_c = 2.00	ϕ_c = 0.75

Note: Heavy line indicates KL/r equal to or greater than 200.
Dashed line indicates the KL beyond which bare steel strength controls.

Table 4-16 (continued)

Available Strength in Axial Compression, kips

Concrete Filled Square HSS

F_y = 46 ksi
f'_c = 5 ksi

5

COMPOSITE
HSS2$^1/_2$-HSS2$^1/_4$

Shape		HSS2$^1/_2$×2$^1/_2$×								HSS2$^1/_4$×2$^1/_4$×	
		$^5/_{16}$		$^1/_4$		$^3/_{16}$		$^1/_8$		$^1/_4$	
t_{design}, in.		0.291		0.233		0.174		0.116		0.233	
Steel, lb/ft		8.45		7.11		5.59		3.90		6.26	
Design		P_n/Ω_c ASD	$\phi_c P_n$ LRFD	P_n/Ω_c ASD	$\phi_c P_n$ LRFD	P_n/Ω_c ASD	$\phi_c P_n$ LRFD	P_n/Ω_c ASD	$\phi_c P_n$ LRFD	P_n/Ω_c ASD	$\phi_c P_n$ LRFD
Effective length, KL (ft)	0	64.7	97.3	54.3	81.6	45.2	67.8	35.5	53.3	47.9	72.0
	1	63.9	96.1	53.6	80.6	44.7	67.0	35.1	52.6	47.2	71.0
	2	61.6	92.5	51.8	77.8	43.1	64.6	33.9	50.8	45.2	67.9
	3	57.8	86.9	48.8	73.4	40.5	60.8	31.9	47.9	41.9	63.0
	4	53.0	79.6	45.0	67.6	37.2	55.8	29.4	44.1	37.8	56.7
	5	47.3	71.2	40.4	60.8	33.3	50.0	26.4	39.6	33.0	49.6
	6	41.3	62.0	35.5	53.4	29.2	43.7	23.2	34.8	28.0	42.1
	7	35.1	52.7	30.5	45.9	24.9	37.3	19.9	29.8	23.1	34.7
	8	29.1	43.7	25.6	38.5	20.9	31.5	16.6	25.0	18.4	27.7
	9	23.5	35.2	20.9	31.5	17.4	26.1	13.6	20.4	14.6	21.9
	10	19.0	28.6	17.0	25.5	14.1	21.2	11.0	16.5	11.8	17.7
	11	15.7	23.6	14.0	21.1	11.7	17.5	9.10	13.7	9.75	14.7
	12	13.2	19.8	11.8	17.7	9.80	14.7	7.65	11.5	8.19	12.3
	13	11.2	16.9	10.0	15.1	8.35	12.6	6.52	9.77	6.98	10.5
	14	9.69	14.6	8.65	13.0	7.20	10.8	5.62	8.43		
	15			7.53	11.3	6.27	9.43	4.89	7.34		
	16							4.30	6.45		
Properties											
M_n/Ω_b	$\phi_b M_n$ kip-ft	4.48	6.73	3.93	5.90	3.24	4.86	2.39	3.59	3.07	4.61
$P_e(KL)^2/10^4$	kip-in.^{2}	55.8		51.4		44.7		36.2		35.2	
ASD	LRFD	Note: Heavy line indicates KL/r equal to or greater than 200.									
Ω_c = 2.00	ϕ_c = 0.75	Dashed line indicates the KL beyond which bare steel strength controls.									

5

COMPOSITE
HSS2$^1/_4$-HSS2

Table 4-16 (continued)
Available Strength in Axial Compression, kips
Concrete Filled Square HSS

F_y = 46 ksi
f'_c = 5 ksi

Shape		HSS2$^1/_4$×2$^1/_4$×				HSS2×2×					
		$^3/_{16}$		$^1/_8$		$^1/_4$		$^3/_{16}$		$^1/_8$	
t_{design}, in.		0.174		0.116		0.233		0.174		0.116	
Steel, lb/ft		4.96		3.48		5.41		4.32		3.05	
Design		P_n/Ω_c ASD	$\phi_c P_n$ LRFD	P_n/Ω_c ASD	$\phi_c P_n$ LRFD	P_n/Ω_c ASD	$\phi_c P_n$ LRFD	P_n/Ω_c ASD	$\phi_c P_n$ LRFD	P_n/Ω_c ASD	$\phi_c P_n$ LRFD
Effective length, KL (ft)	0	39.1	58.7	30.6	45.9	41.6	62.5	33.1	49.7	25.9	38.9
	1	38.5	57.8	30.2	45.3	40.8	61.3	32.5	48.7	25.5	38.2
	2	36.8	55.2	28.9	43.3	38.5	57.8	30.6	45.9	24.1	36.1
	3	34.1	51.2	26.8	40.2	34.9	52.4	27.9	41.9	21.9	32.9
	4	30.7	46.0	24.2	36.3	30.4	45.7	24.6	36.9	19.2	28.8
	5	26.7	40.1	21.2	31.8	25.5	38.3	20.9	31.4	16.2	24.4
	6	22.9	34.4	18.0	27.1	20.6	30.9	17.1	25.7	13.2	19.8
	7	19.1	28.7	14.9	22.4	15.9	24.0	13.5	20.4	10.4	15.5
	8	15.5	23.3	12.0	17.9	12.2	18.3	10.4	15.7	7.95	11.9
	9	12.3	18.5	9.45	14.2	9.64	14.5	8.24	12.4	6.28	9.42
	10	9.97	15.0	7.65	11.5	7.81	11.7	6.67	10.0	5.09	7.63
	11	8.24	12.4	6.33	9.49	6.46	9.70	5.52	8.29	4.20	6.31
	12	6.92	10.4	5.31	7.97			4.63	6.97	3.53	5.30
	13	5.90	8.87	4.53	6.79						
	14			3.90	5.86						
Properties											
M_n/Ω_b	$\phi_b M_n$ kip-ft	2.53	3.81	1.89	2.84	2.30	3.45	1.93	2.90	1.45	2.18
$P_e(KL)^2/10^4$	kip-in.^{2}	31.0		25.1		22.9		20.4		16.7	

ASD	LRFD
Ω_c = 2.00	ϕ_c = 0.75

Note: Heavy line indicates KL/r equal to or greater than 200.
Dashed line indicates the KL beyond which bare steel strength controls.

Table 4-17
Available Strength in Axial Compression, kips
Concrete Filled Round HSS

F_y = 42 ksi
f'_c = 4 ksi

4

COMPOSITE
HSS18-
HSS16

Shape		HSS18×				HSS16×							
		0.500		0.375		0.625		0.500		0.438		0.375	
t_{design}, in.		0.465		0.349		0.581		0.465		0.407		0.349	
Steel, lb/ft		93.5		70.7		103		82.9		72.9		62.6	
Design		P_n/Ω_c	$\phi_c P_n$	P_n/Ω_c	$\phi_c P_n$	P_n/Ω_c	$\phi_c P_n$	P_n/Ω_c	$\phi_c P_n$	P_n/Ω_c	$\phi_c P_n$	P_n/Ω_c	$\phi_c P_n$
		ASD	LRFD	ASD	LRFD	ASD	LRFD	ASD	LRFD	ASD	LRFD	ASD	LRFD
Effective length, KL (ft)	0	972	1460	854	1280	919	1380	816	1220	762	1140	711	1070
	6	962	1440	844	1270	907	1360	805	1210	752	1130	701	1050
	7	958	1440	841	1260	903	1350	801	1200	748	1120	697	1050
	8	954	1430	837	1260	898	1350	797	1200	744	1120	693	1040
	9	949	1420	833	1250	893	1340	792	1190	739	1110	689	1030
	10	944	1420	828	1240	887	1330	786	1180	734	1100	684	1030
	11	938	1410	822	1230	880	1320	780	1170	728	1090	678	1020
	12	932	1400	817	1220	873	1310	774	1160	722	1080	672	1010
	13	925	1390	810	1220	865	1300	767	1150	715	1070	666	999
	14	918	1380	803	1210	857	1290	759	1140	708	1060	659	988
	15	910	1360	796	1190	848	1270	751	1130	701	1050	651	977
	16	902	1350	788	1180	839	1260	743	1110	692	1040	644	966
	17	893	1340	780	1170	829	1240	734	1100	684	1030	636	953
	18	884	1330	772	1160	819	1230	724	1090	675	1010	627	941
	19	874	1310	763	1140	808	1210	714	1070	666	999	618	927
	20	864	1300	754	1130	797	1200	704	1060	656	984	609	913
	21	854	1280	744	1120	786	1180	694	1040	646	969	599	899
	22	843	1260	734	1100	774	1160	683	1020	636	954	590	884
	23	832	1250	724	1090	761	1140	672	1010	625	938	579	869
	24	820	1230	714	1070	749	1120	660	990	614	921	569	853
	25	809	1210	703	1050	736	1100	649	973	603	905	558	838
	26	796	1190	692	1040	723	1080	637	955	592	887	547	821
	27	784	1180	680	1020	709	1060	624	936	580	870	536	805
	28	771	1160	669	1000	696	1040	612	918	568	852	525	788
	29	759	1140	657	985	682	1020	599	899	556	834	514	771
	30	746	1120	645	967	667	1000	586	880	544	816	502	753
	32	719	1080	620	931	639	958	560	840	519	779	479	718
	34	691	1040	595	893	609	914	534	801	494	741	455	682
	36	663	995	570	855	580	870	507	761	469	704	431	647
	38	635	952	544	816	550	825	480	720	444	666	407	611
	40	606	909	518	778	521	781	454	680	419	628	383	575
Properties													
M_r/Ω_b	$\phi_b M_n$ kip-ft	350	525	274	412	326	490	271	407	242	364	213	320
$P_e(KL)^2/10^4$	kip-in.^{2}	39700		33000		31200		26800		24500		22200	

ASD	LRFD
Ω_c = 2.00	ϕ_c = 0.75

4

COMPOSITE HSS16-HSS14

Table 4-17 (continued)
Available Strength in Axial Compression, kips
Concrete Filled Round HSS

F_y = 42 ksi
f'_c = 4 ksi

Shape		HSS16×				HSS14×							
		0.312		0.250[f]		0.625		0.500		0.375		0.312	
t_{design}, in.		0.291		0.233		0.581		0.465		0.349		0.291	
Steel, lb/ft		52.3		42.1		89.4		72.2		54.6		45.7	
Design		P_n/Ω_c	$\phi_c P_n$	P_n/Ω_c	$\phi_c P_n$	P_n/Ω_c	$\phi_c P_n$	P_n/Ω_c	$\phi_c P_n$	P_n/Ω_c	$\phi_c P_n$	P_n/Ω_c	$\phi_c P_n$
		ASD	LRFD	ASD	LRFD	ASD	LRFD	ASD	LRFD	ASD	LRFD	ASD	LRFD
Effective length, KL (ft)	0	657	986	602	903	760	1140	671	1010	579	868	531	797
	6	648	971	593	889	748	1120	659	989	569	853	522	782
	7	644	966	589	884	743	1120	655	983	565	848	518	777
	8	640	961	586	879	738	1110	651	976	561	842	514	771
	9	636	954	582	872	733	1100	646	968	556	835	510	765
	10	631	947	577	865	726	1090	640	960	551	827	505	757
	11	626	939	572	858	719	1080	634	950	546	818	500	749
	12	620	930	566	850	712	1070	627	940	539	809	494	741
	13	614	921	561	841	704	1060	619	929	533	799	488	731
	14	607	911	554	831	695	1040	612	917	526	789	481	721
	15	600	901	548	821	686	1030	603	905	518	778	474	711
	16	593	890	540	811	676	1010	595	892	511	766	467	700
	17	585	878	533	800	666	999	585	878	502	753	459	688
	18	577	866	525	788	655	983	576	864	494	741	451	676
	19	569	853	517	776	644	966	566	849	485	727	442	664
	20	560	840	509	763	633	949	556	834	476	713	434	651
	21	551	826	500	750	621	931	545	818	466	699	425	637
	22	541	812	491	737	609	913	534	801	456	685	416	623
	23	532	797	482	723	596	894	523	785	446	670	406	609
	24	522	783	473	709	583	875	512	767	436	654	397	595
	25	512	767	463	695	570	856	500	750	426	639	387	580
	26	501	752	453	680	557	836	488	732	415	623	377	566
	27	491	736	443	665	544	816	476	714	405	607	367	551
	28	480	720	433	650	530	795	464	696	394	591	357	535
	29	469	704	423	635	517	775	452	677	383	574	347	520
	30	458	687	413	619	503	754	439	659	372	558	337	505
	32	436	654	392	588	475	712	414	622	350	525	316	474
	34	414	620	371	556	447	670	389	584	328	492	296	443
	36	391	587	350	524	419	629	365	547	306	459	275	413
	38	369	553	329	493	391	587	340	510	285	427	255	383
	40	346	519	308	462	364	547	316	474	264	396	236	354
Properties													
M_n/Ω_b	$\phi_b M_n$ kip-ft	182	274	149	225	244	367	203	305	160	240	137	206
$P_e(KL)^2/10^4$	kip-in.^{2}	19800		17300		19900		17200		14200		12600	

ASD: $\Omega_c = 2.00$ LRFD: $\phi_c = 0.75$

[f] Shape is noncompact for flexure with F_y = 42 ksi.

Table 4-17 (continued)

F_y = 42 ksi
f'_c = 4 ksi

Available Strength in Axial Compression, kips

Concrete Filled Round HSS

4

COMPOSITE
HSS14-
HSS10.750

Shape		HSS14×		HSS12.750×						HSS10.750×			
		0.250		0.500		0.375		0.250		0.500		0.375	
t_{design}, in.		0.233		0.465		0.349		0.233		0.465		0.349	
Steel, lb/ft		36.8		65.5		49.6		33.4		54.8		41.6	
Design		P_n/Ω_c	$\phi_c P_n$	P_n/Ω_c	$\phi_c P_n$	P_n/Ω_c	$\phi_c P_n$	P_n/Ω_c	$\phi_c P_n$	P_n/Ω_c	$\phi_c P_n$	P_n/Ω_c	$\phi_c P_n$
		ASD	LRFD	ASD	LRFD	ASD	LRFD	ASD	LRFD	ASD	LRFD	ASD	LRFD
Effective length, KL (ft)	0	485	728	584	877	502	754	418	626	459	688	390	585
	6	476	714	573	859	492	738	408	612	446	669	379	569
	7	473	709	569	853	488	732	405	607	442	663	375	563
	8	469	704	564	846	484	726	401	602	437	655	371	556
	9	465	697	559	838	479	719	397	595	431	646	366	549
	10	460	690	553	829	474	711	392	588	425	637	360	540
	11	455	683	546	819	468	702	387	580	418	627	354	531
	12	450	674	539	809	462	693	381	572	410	615	348	522
	13	444	665	532	798	455	683	376	563	402	604	341	511
	14	437	656	524	786	448	672	369	554	394	591	334	500
	15	431	646	515	773	441	661	363	544	385	578	326	489
	16	424	635	507	760	433	649	356	533	376	564	318	477
	17	416	624	497	746	425	637	348	522	367	550	310	464
	18	408	613	488	732	416	624	341	511	357	535	301	452
	19	401	601	478	717	407	611	333	499	347	520	292	438
	20	392	588	467	701	398	597	325	487	336	504	283	425
	21	384	576	457	685	389	583	317	475	326	489	274	411
	22	375	563	446	669	379	568	308	462	315	472	265	397
	23	366	549	435	652	369	554	300	449	304	456	256	383
	24	357	536	424	635	359	539	291	436	293	440	246	369
	25	348	522	412	618	349	524	282	423	282	423	237	355
	26	339	508	401	601	339	508	273	410	271	407	227	341
	27	329	494	389	583	329	493	264	396	260	390	218	327
	28	320	480	377	566	318	477	255	383	249	374	208	313
	29	310	465	365	548	308	462	246	369	239	358	199	299
	30	301	451	353	530	297	446	237	356	228	342	190	285
	32	281	422	330	495	277	415	220	329	207	310	172	258
	34	262	393	306	460	256	384	202	303	187	280	155	232
	36	243	365	283	425	236	354	185	278	167	251	138	207
	38	225	338	261	391	217	325	169	253	150	225	124	186
	40	207	311	239	359	198	297	153	229	135	203	112	168
Properties													
M_n/Ω_b	$\phi_b M_n$ kip-ft	113	170	166	249	130	196	92.6	139	114	172	90.2	136
$P_e(KL)^2/10^4$	kip-in.^{2}	11000		12600		10400		8020		7110		5880	

ASD	LRFD
Ω_c = 2.00	ϕ_c = 0.75

4

COMPOSITE HSS10.750-HSS10

Table 4-17 (continued)
Available Strength in Axial Compression, kips
Concrete Filled Round HSS

F_y = 42 ksi
f'_c = 4 ksi

Shape		HSS10.750×		HSS10×									
		0.250		0.625		0.500		0.375		0.312		0.250	
t_{design}, in.		0.233		0.581		0.465		0.349		0.291		0.233	
Steel, lb/ft		28.1		62.6		50.8		38.6		32.3		26.1	
Design		P_n/Ω_c ASD	$\phi_c P_n$ LRFD	P_n/Ω_c ASD	$\phi_c P_n$ LRFD	P_n/Ω_c ASD	$\phi_c P_n$ LRFD	P_n/Ω_c ASD	$\phi_c P_n$ LRFD	P_n/Ω_c ASD	$\phi_c P_n$ LRFD	P_n/Ω_c ASD	$\phi_c P_n$ LRFD
Effective length, KL (ft)	0	320	479	478	717	415	622	352	528	319	478	286	429
	6	310	465	463	694	402	602	340	510	308	462	276	414
	7	306	460	457	686	397	595	336	504	305	457	272	409
	8	302	454	451	676	392	587	332	497	300	450	269	403
	9	298	447	444	666	386	579	327	490	296	443	264	396
	10	293	440	437	655	379	569	321	481	290	436	259	389
	11	288	432	428	643	372	558	315	472	285	427	254	381
	12	282	424	420	629	365	547	308	462	279	418	248	373
	13	276	415	410	615	356	535	301	452	272	408	242	364
	14	270	405	400	601	348	522	294	441	265	398	236	354
	15	263	395	390	585	339	509	286	429	258	387	230	344
	16	257	385	379	569	330	495	278	417	251	376	223	334
	17	249	374	368	552	320	480	270	405	243	365	216	323
	18	242	363	357	535	310	465	261	392	235	353	208	313
	19	234	352	345	518	300	450	253	379	227	341	201	302
	20	227	340	333	500	290	435	244	366	219	329	194	290
	21	219	328	321	482	279	419	235	352	211	316	186	279
	22	211	316	309	463	269	403	226	338	203	304	178	267
	23	203	304	297	445	258	387	216	325	194	291	171	256
	24	195	292	284	427	248	371	207	311	186	279	163	245
	25	187	280	272	408	237	355	198	297	178	266	155	233
	26	179	268	260	390	226	340	189	284	169	254	148	222
	27	171	256	248	372	216	324	180	270	161	242	140	211
	28	163	245	236	354	205	308	171	257	153	230	133	200
	29	155	233	224	336	195	293	163	244	145	218	126	189
	30	148	221	212	319	185	278	154	231	137	206	119	178
	32	133	199	192	289	166	249	137	206	122	183	105	158
	34	118	177	173	260	147	221	122	183	108	162	93.1	140
	36	106	158	155	232	131	197	109	163	96.5	145	83.1	125
	38	94.7	142	139	208	118	177	97.5	146	86.6	130	74.5	112
	40	85.5	128	125	188	106	159	88.0	132	78.1	117	67.3	101
Properties													
M_n/Ω_b $\phi_b M_n$	kip-ft	64.2	96.5	117	176	97.6	147	77.1	116	66.2	99.6	54.9	82.6
$P_e(KL)^2/10^4$	kip-in.^{2}	4490		6400		5580		4620		4100		3530	

ASD	LRFD
Ω_c = 2.00	ϕ_c = 0.75

Note: Dashed line indicates the KL beyond which bare steel strength controls.

F_y = 42 ksi
f'_c = 4 ksi

Table 4-17 (continued)
Available Strength in Axial Compression, kips
Concrete Filled Round HSS

4
COMPOSITE
HSS10-
HSS9.625

Shape		HSS10×		HSS9.625×									
		0.188		0.500		0.375		0.312		0.250		0.188	
t_{design}, in.		0.174		0.465		0.349		0.291		0.233		0.174	
Steel, lb/ft		19.7		48.8		37.1		31.1		25.1		19.0	
Design		P_n/Ω_c ASD	$\phi_c P_n$ LRFD	P_n/Ω_c ASD	$\phi_c P_n$ LRFD	P_n/Ω_c ASD	$\phi_c P_n$ LRFD	P_n/Ω_c ASD	$\phi_c P_n$ LRFD	P_n/Ω_c ASD	$\phi_c P_n$ LRFD	P_n/Ω_c ASD	$\phi_c P_n$ LRFD
Effective length, KL (ft)	0	252	378	394	591	333	500	301	452	269	404	237	355
	6	243	364	381	571	322	482	290	436	260	389	228	342
	7	239	359	376	564	317	476	287	430	256	384	224	337
	8	236	354	370	556	313	469	282	424	252	378	221	331
	9	232	347	364	547	308	461	278	416	248	371	217	325
	10	227	341	358	537	302	453	272	408	243	364	212	318
	11	222	333	351	526	296	444	267	400	237	356	207	311
	12	217	325	343	514	289	434	261	391	232	348	202	303
	13	211	317	335	502	282	423	254	381	226	339	197	295
	14	206	308	326	489	275	412	247	371	220	329	191	286
	15	200	299	317	475	267	401	240	360	213	320	185	277
	16	193	290	308	461	259	389	233	349	206	309	179	268
	17	187	280	298	447	251	376	225	338	199	299	172	258
	18	180	270	288	432	242	364	217	326	192	288	166	248
	19	173	260	278	417	234	351	209	314	185	277	159	238
	20	167	250	268	401	225	337	201	302	177	266	152	228
	21	160	239	257	386	216	324	193	290	170	255	145	218
	22	153	229	247	370	207	311	185	278	163	244	139	208
	23	146	219	236	354	198	297	177	265	155	233	132	198
	24	139	208	226	338	189	284	169	253	148	222	125	188
	25	132	198	215	323	180	271	161	241	140	210	119	178
	26	125	188	205	307	172	257	152	229	133	200	112	168
	27	119	178	195	292	163	244	145	217	126	189	106	159
	28	112	168	184	277	154	232	137	205	119	178	99.5	149
	29	106	158	175	262	146	219	129	194	112	168	93.4	140
	30	99.3	149	165	247	138	207	122	183	105	158	87.3	131
	32	87.3	131	146	219	122	183	107	161	92.5	139	76.8	115
	34	77.4	116	129	194	108	162	95.0	142	82.0	123	68.0	102
	36	69.0	103	115	173	96.2	144	84.7	127	73.1	110	60.7	91.0
	38	61.9	92.9	103	155	86.3	130	76.0	114	65.6	98.4	54.4	81.7
	40	55.9	83.8	93.4	140	77.9	117	68.6	103	59.2	88.8	49.1	73.7
Properties													
M/Ω_b	$\phi_b M_n$ kip-ft	42.8	64.4	89.8	135	71.0	107	61.0	91.7	50.6	76.0	39.5	59.3
$P_e(KL)^2/10^4$	kip-in.^{2}	2940		4910		4090		3610		3110		2580	

ASD	LRFD
Ω_c = 2.00	ϕ_c = 0.75

4

COMPOSITE
HSS8.625

Table 4-17 (continued)
Available Strength in Axial Compression, kips
Concrete Filled Round HSS

F_y = 42 ksi
f'_c = 4 ksi

Shape		HSS8.625×											
		0.625		0.500		0.375		0.322		0.250		0.188	
t_{design}, in.		0.581		0.465		0.349		0.300		0.233		0.174	
Steel, lb/ft		53.5		43.4		33.1		28.6		22.4		17.0	
Design		P_n/Ω_c	$\phi_c P_n$	P_n/Ω_c	$\phi_c P_n$	P_n/Ω_c	$\phi_c P_n$	P_n/Ω_c	$\phi_c P_n$	P_n/Ω_c	$\phi_c P_n$	P_n/Ω_c	$\phi_c P_n$
		ASD	LRFD	ASD	LRFD	ASD	LRFD	ASD	LRFD	ASD	LRFD	ASD	LRFD
Effective length, KL (ft)	0	392	588	338	507	284	426	261	391	228	342	199	299
	6	375	562	324	486	272	408	250	374	218	327	190	285
	7	369	554	319	478	268	402	246	369	214	322	187	280
	8	362	544	313	470	263	395	241	362	210	316	183	274
	9	355	532	307	460	258	387	236	354	206	309	179	268
	10	347	520	300	450	252	378	231	346	201	301	174	261
	11	338	507	293	439	245	368	225	337	196	293	169	254
	12	329	493	285	427	239	358	219	328	190	285	164	246
	13	319	478	276	414	232	347	212	318	184	276	159	238
	14	309	463	267	401	224	336	205	308	178	267	153	230
	15	298	447	258	387	216	325	198	297	171	257	147	221
	16	287	430	249	373	208	313	190	286	165	247	141	212
	17	276	413	239	359	200	300	183	274	158	237	135	203
	18	264	396	229	344	192	288	175	263	151	226	129	193
	19	252	379	219	329	184	275	167	251	144	216	123	184
	20	241	361	209	314	175	263	160	239	137	206	116	174
	21	229	344	199	299	167	250	152	228	130	195	110	165
	22	218	328	189	284	158	237	144	216	123	185	104	156
	23	208	312	179	269	150	225	136	204	116	174	97.7	147
	24	197	297	169	254	141	212	129	193	109	164	91.8	138
	25	187	281	160	240	133	200	121	182	103	154	85.9	129
	26	177	266	150	225	125	188	114	171	96.3	144	80.2	120
	27	167	251	141	211	118	176	106	160	90.0	135	74.5	112
	28	157	237	132	198	110	165	99.4	149	83.7	126	69.3	104
	29	148	222	123	185	102	154	92.6	139	78.1	117	64.6	96.9
	30	138	208	115	173	95.7	144	86.6	130	72.9	109	60.4	90.5
	32	122	183	101	152	84.1	126	76.1	114	64.1	96.2	53.1	79.6
	34	108	162	89.7	135	74.5	112	67.4	101	56.8	85.2	47.0	70.5
	36	96.2	145	80.0	120	66.4	99.7	60.1	90.2	50.7	76.0	41.9	62.9
	38	86.3	130	71.8	108	59.6	89.5	54.0	80.9	45.5	68.2	37.6	56.4
	40	77.9	117	64.8	97.5	53.8	80.7	48.7	73.0	41.0	61.5	34.0	50.9
Properties													
M_n/Ω_b	$\phi_b M_n$ kip-ft	84.4	127	70.6	106	55.9	84.0	49.3	74.1	39.9	60.0	31.2	46.9
$P_e(KL)^2/10^4$	kip-in.^{2}	3880		3400		2830		2560		2160		1780	
ASD	LRFD	Note: Dashed line indicates the KL beyond which bare steel strength controls.											
$\Omega_c = 2.00$	$\phi_c = 0.75$												

F_y = 42 ksi
f'_c = 4 ksi

Table 4-17 (continued)
Available Strength in Axial Compression, kips
Concrete Filled Round HSS

4

COMPOSITE
HSS7.625-
HSS7.500

Shape		HSS7.625×				HSS7.500×							
		0.375		0.328		0.500		0.375		0.312		0.250	
t_{design}, in.		0.349		0.305		0.465		0.349		0.291		0.233	
Steel, lb/ft		29.1		25.6		37.4		28.6		24.0		19.4	
Design		P_n/Ω_c	$\phi_c P_n$	P_n/Ω_c	$\phi_c P_n$	P_n/Ω_c	$\phi_c P_n$	P_n/Ω_c	$\phi_c P_n$	P_n/Ω_c	$\phi_c P_n$	P_n/Ω_c	$\phi_c P_n$
		ASD	LRFD	ASD	LRFD	ASD	LRFD	ASD	LRFD	ASD	LRFD	ASD	LRFD
Effective length, KL (ft)	0	239	359	221	331	281	421	234	351	210	315	186	278
	6	226	339	209	313	265	397	221	331	198	297	175	262
	7	222	333	205	307	259	389	216	324	194	291	171	257
	8	217	325	200	300	253	380	211	316	189	284	167	250
	9	211	317	195	292	247	370	205	308	184	276	162	244
	10	205	307	189	283	239	359	199	299	179	268	157	236
	11	198	298	183	274	231	347	193	289	173	259	152	228
	12	191	287	177	265	223	334	186	278	167	250	146	219
	13	184	276	170	255	214	321	178	268	160	240	140	211
	14	177	265	163	244	205	308	171	256	153	230	134	201
	15	169	253	156	234	196	294	163	245	146	219	128	192
	16	161	241	148	223	186	279	155	233	139	209	122	182
	17	153	229	141	212	177	265	147	221	132	198	115	173
	18	145	217	134	200	167	251	139	209	125	187	109	163
	19	137	205	126	189	157	236	131	197	118	176	102	153
	20	129	193	119	178	148	222	123	185	110	166	95.9	144
	21	121	181	111	167	139	208	115	173	103	155	89.6	134
	22	113	170	104	156	130	195	108	162	96.5	145	83.5	125
	23	106	158	97.2	146	122	183	100	151	89.8	135	77.5	116
	24	98.2	147	90.4	136	114	171	93.1	140	83.3	125	71.7	108
	25	90.9	136	83.6	125	106	160	85.9	129	76.8	115	66.1	99.1
	26	84.0	126	77.3	116	98.6	148	79.4	119	71.0	106	61.1	91.6
	27	77.9	117	71.7	108	91.4	137	73.6	110	65.8	98.7	56.6	84.9
	28	72.4	109	66.7	100	85.0	128	68.5	103	61.2	91.8	52.7	79.0
	29	67.5	101	62.2	93.2	79.3	119	63.8	95.7	57.1	85.6	49.1	73.6
	30	63.1	94.6	58.1	87.1	74.1	111	59.6	89.5	53.3	80.0	45.9	68.8
	32	55.5	83.2	51.1	76.6	65.1	97.8	52.4	78.6	46.9	70.3	40.3	60.5
	34	49.1	73.7	45.2	67.8	57.7	86.7	46.4	69.7	41.5	62.3	35.7	53.6
	36	43.8	65.7	40.3	60.5	51.4	77.3	41.4	62.1	37.0	55.5	31.9	47.8
	38	39.3	59.0	36.2	54.3	46.2	69.4	37.2	55.8	33.2	49.9	28.6	42.9
	40	35.5	53.2	32.7	49.0	41.7	62.6	33.5	50.3	30.0	45.0	25.8	38.7
Properties													
M_n/Ω_b	$\phi_b M_n$ kip-ft	42.7	64.2	38.3	57.5	51.9	78.1	41.2	61.9	35.5	53.4	29.5	44.4
$P_e(KL)^2/10^4$	kip-in.^{2}	1860		1720		2110		1760		1580		1360	
ASD	LRFD	Note: Dashed line indicates the KL beyond which bare steel strength controls.											
$\Omega_c = 2.00$	$\phi_c = 0.75$												

4

COMPOSITE
HSS7.500-
HSS7

Table 4-17 (continued)
Available Strength in Axial Compression, kips
Concrete Filled Round HSS

F_y = 42 ksi
f'_c = 4 ksi

Shape		HSS7.500×		HSS7×							
		0.188		0.500		0.375		0.312		0.250	
t_{design}, in.		0.174		0.465		0.349		0.291		0.233	
Steel, lb/ft		14.7		34.7		26.6		22.3		18.0	
Design		P_n/Ω_c	$\phi_c P_n$	P_n/Ω_c	$\phi_c P_n$	P_n/Ω_c	$\phi_c P_n$	P_n/Ω_c	$\phi_c P_n$	P_n/Ω_c	$\phi_c P_n$
		ASD	LRFD	ASD	LRFD	ASD	LRFD	ASD	LRFD	ASD	LRFD
Effective length, KL (ft)	0	160	241	256	383	212	319	190	285	168	251
	6	151	226	239	359	199	298	178	267	157	235
	7	147	221	233	350	194	291	174	261	153	229
	8	144	215	227	341	189	283	169	254	149	223
	9	139	209	220	330	183	275	164	246	144	216
	10	135	202	213	319	177	265	158	237	139	208
	11	130	195	204	307	170	255	152	228	134	200
	12	125	187	196	294	163	245	146	219	128	192
	13	120	179	187	281	156	234	139	209	122	183
	14	114	171	178	267	148	222	133	199	116	174
	15	109	163	169	253	141	211	126	189	110	165
	16	103	154	159	239	133	199	119	178	104	156
	17	97.2	146	150	225	125	188	112	168	97.5	146
	18	91.5	137	141	212	117	176	105	157	91.3	137
	19	85.8	129	133	199	110	164	98.0	147	85.2	128
	20	80.2	120	124	187	102	153	91.3	137	79.2	119
	21	74.7	112	116	175	94.6	142	84.6	127	73.3	110
	22	69.3	104	108	163	87.5	131	78.2	117	67.6	101
	23	64.1	96.2	101	151	80.4	121	71.9	108	62.0	93.0
	24	59.0	88.5	93.1	140	73.8	111	66.0	99.0	56.9	85.4
	25	54.4	81.5	85.8	129	68.0	102	60.8	91.3	52.5	78.7
	26	50.3	75.4	79.4	119	62.9	94.4	56.2	84.4	48.5	72.8
	27	46.6	69.9	73.6	111	58.3	87.5	52.2	78.2	45.0	67.5
	28	43.3	65.0	68.4	103	54.2	81.4	48.5	72.7	41.8	62.8
	29	40.4	60.6	63.8	95.9	50.6	75.8	45.2	67.8	39.0	58.5
	30	37.7	56.6	59.6	89.6	47.2	70.9	42.2	63.4	36.4	54.7
	32	33.2	49.8	52.4	78.8	41.5	62.3	37.1	55.7	32.0	48.1
	34	29.4	44.1	46.4	69.8	36.8	55.2	32.9	49.3	28.4	42.6
	36	26.2	39.3	41.4	62.2	32.8	49.2	29.3	44.0	25.3	38.0
	38	23.5	35.3	37.2	55.8	29.4	44.2	26.3	39.5	22.7	34.1
	40	21.2	31.9								
Properties											
M_n/Ω_b $\phi_b M_n$ kip-ft		23.1	34.7	44.6	67.0	35.4	53.3	30.6	45.9	25.4	38.2
$P_e(KL)^2/10^4$ kip-in.^{2}		1120		1670		1400		1250		1080	

ASD	LRFD
Ω_c = 2.00	ϕ_c = 0.75

Note: Heavy line indicates KL/r equal to or greater than 200.
Dashed line indicates the KL beyond which bare steel strength controls.

Table 4-17 (continued)

F_y = 42 ksi
f'_c = 4 ksi

Available Strength in Axial Compression, kips

Concrete Filled Round HSS

4 COMPOSITE HSS7-HSS6.875

Shape		HSS7×				HSS6.875×					
		0.188		0.125		0.500		0.375		0.312	
t_{design}, in.		0.174		0.116		0.465		0.349		0.291	
Steel, lb/ft		13.7		9.19		34.1		26.1		21.9	
Design		P_n/Ω_c ASD	$\phi_c P_n$ LRFD	P_n/Ω_c ASD	$\phi_c P_n$ LRFD	P_n/Ω_c ASD	$\phi_c P_n$ LRFD	P_n/Ω_c ASD	$\phi_c P_n$ LRFD	P_n/Ω_c ASD	$\phi_c P_n$ LRFD
Effective length, KL (ft)	0	144	217	121	182	249	374	207	311	186	278
	6	134	202	112	168	233	349	194	290	173	260
	7	131	197	109	164	227	341	189	283	169	253
	8	127	191	106	158	221	331	184	275	164	246
	9	123	185	102	153	214	320	178	267	159	239
	10	119	178	97.9	147	206	309	171	257	153	230
	11	114	171	93.6	140	198	297	165	247	147	221
	12	109	163	89.1	134	189	284	158	237	141	212
	13	104	155	84.5	127	181	271	150	226	134	202
	14	98.2	147	79.8	120	171	257	143	214	128	192
	15	92.7	139	75.0	113	162	243	135	203	121	181
	16	87.2	131	70.2	105	153	229	127	191	114	171
	17	81.7	123	65.5	98.2	144	215	120	180	107	161
	18	76.3	114	60.8	91.1	135	203	112	168	100	150
	19	70.9	106	56.2	84.2	127	190	104	157	93.3	140
	20	65.7	98.5	51.7	77.5	118	178	96.9	145	86.6	130
	21	60.6	90.9	47.4	71.0	110	166	89.7	135	80.1	120
	22	55.6	83.4	43.1	64.7	103	154	82.6	124	73.8	111
	23	50.9	76.3	39.5	59.2	94.9	143	75.7	114	67.6	101
	24	46.7	70.1	36.3	54.4	87.4	131	69.5	104	62.1	93.2
	25	43.1	64.6	33.4	50.1	80.6	121	64.1	96.1	57.2	85.9
	26	39.8	59.7	30.9	46.3	74.5	112	59.2	88.9	52.9	79.4
	27	36.9	55.4	28.6	43.0	69.1	104	54.9	82.4	49.1	73.6
	28	34.3	51.5	26.6	40.0	64.2	96.5	51.1	76.6	45.6	68.4
	29	32.0	48.0	24.8	37.2	59.9	90.0	47.6	71.4	42.5	63.8
	30	29.9	44.9	23.2	34.8	55.9	84.1	44.5	66.7	39.7	59.6
	32	26.3	39.4	20.4	30.6	49.2	73.9	39.1	58.7	34.9	52.4
	34	23.3	34.9	18.1	27.1	43.5	65.5	34.6	52.0	30.9	46.4
	36	20.8	31.2	16.1	24.2	38.8	58.4	30.9	46.3	27.6	41.4
	38	18.6	28.0	14.5	21.7			27.7	41.6	24.8	37.2
	40	16.8	25.2	13.1	19.6						
Properties											
M_n/Ω_b	$\phi_b M_n$ kip-ft	19.9	29.9	14.1	21.2	42.9	64.4	34.1	51.2	29.4	44.2
$P_e(KL)^2/10^4$	kip-in.^{2}	884		686		1570		1320		1170	

ASD	LRFD
Ω_c = 2.00	ϕ_c = 0.75

Note: Heavy line indicates KL/r equal to or greater than 200.
Dashed line indicates the KL beyond which bare steel strength controls.

4

COMPOSITE HSS6.875-HSS6.625

Table 4-17 (continued)
Available Strength in Axial Compression, kips
Concrete Filled Round HSS

F_y = 42 ksi
f'_c = 4 ksi

Shape		HSS6.875×				HSS6.625×					
		0.250		0.188		0.500		0.432		0.375	
t_{design}, in.		0.233		0.174		0.465		0.402		0.349	
Steel, lb/ft		17.7		13.4		32.7		28.6		25.1	
Design		P_n/Ω_c ASD	$\phi_c P_n$ LRFD	P_n/Ω_c ASD	$\phi_c P_n$ LRFD	P_n/Ω_c ASD	$\phi_c P_n$ LRFD	P_n/Ω_c ASD	$\phi_c P_n$ LRFD	P_n/Ω_c ASD	$\phi_c P_n$ LRFD
Effective length, KL (ft)	0	163	245	140	211	237	356	216	323	197	295
	6	152	228	131	196	220	331	200	300	183	274
	7	149	223	127	191	215	322	195	293	178	267
	8	144	216	123	185	208	312	189	284	173	259
	9	140	209	119	179	201	301	183	274	167	250
	10	135	202	115	172	193	290	176	263	160	241
	11	129	194	110	165	185	277	168	252	154	231
	12	123	185	105	157	176	265	161	241	147	220
	13	118	176	99.7	150	168	251	152	229	139	209
	14	112	167	94.4	142	158	238	144	216	132	198
	15	105	158	89.0	133	149	224	136	204	124	186
	16	99.3	149	83.5	125	141	211	128	191	117	175
	17	93.1	140	78.1	117	132	199	119	179	109	164
	18	87.0	131	72.8	109	124	186	111	166	102	152
	19	81.0	121	67.5	101	116	174	103	154	94.1	141
	20	75.1	113	62.4	93.6	108	162	95.2	143	86.9	130
	21	69.3	104	57.4	86.1	99.6	150	88.3	133	79.9	120
	22	63.8	95.6	52.5	78.7	92.0	138	81.6	123	73.0	110
	23	58.3	87.5	48.0	72.0	84.4	127	75.1	113	66.9	101
	24	53.6	80.3	44.1	66.2	77.5	116	68.9	104	61.4	92.4
	25	49.4	74.0	40.7	61.0	71.4	107	63.5	95.5	56.6	85.1
	26	45.6	68.5	37.6	56.4	66.0	99.3	58.7	88.3	52.4	78.7
	27	42.3	63.5	34.9	52.3	61.2	92.0	54.5	81.9	48.5	73.0
	28	39.3	59.0	32.4	48.6	56.9	85.6	50.6	76.1	45.1	67.9
	29	36.7	55.0	30.2	45.3	53.1	79.8	47.2	71.0	42.1	63.3
	30	34.3	51.4	28.2	42.3	49.6	74.6	44.1	66.3	39.3	59.1
	32	30.1	45.2	24.8	37.2	43.6	65.5	38.8	58.3	34.6	51.9
	34	26.7	40.0	22.0	33.0	38.6	58.0	34.4	51.6	30.6	46.0
	36	23.8	35.7	19.6	29.4	34.4	51.8	30.6	46.1	27.3	41.0
	38	21.4	32.0	17.6	26.4						
Properties											
M_n/Ω_b	$\phi_b M_n$ kip-ft	24.4	36.7	19.1	28.8	39.5	59.3	35.2	52.9	31.4	47.2
$P_e(KL)^2/10^4$	kip-in.^{2}	1010		834		1390		1270		1160	

ASD: Ω_c = 2.00 LRFD: ϕ_c = 0.75

Note: Heavy line indicates KL/r equal to or greater than 200.
Dashed line indicates the KL beyond which bare steel strength controls.

Table 4-17 (continued)

F_y = 42 ksi
f'_c = 4 ksi

Available Strength in Axial Compression, kips

Concrete Filled Round HSS

4

COMPOSITE
HSS6.625

Shape		HSS6.625×									
		0.312		0.280		0.250		0.188		0.125	
t_{design}, in.		0.291		0.260		0.233		0.174		0.116	
Steel, lb/ft		21.1		19.0		17.0		12.9		8.69	
Design		P_n/Ω_c ASD	$\phi_c P_n$ LRFD	P_n/Ω_c ASD	$\phi_c P_n$ LRFD	P_n/Ω_c ASD	$\phi_c P_n$ LRFD	P_n/Ω_c ASD	$\phi_c P_n$ LRFD	P_n/Ω_c ASD	$\phi_c P_n$ LRFD
Effective length, KL (ft)	0	176	264	165	247	155	232	133	199	111	166
	6	164	245	153	230	144	216	123	184	102	153
	7	159	239	149	224	140	210	120	179	98.7	148
	8	154	232	145	217	136	203	116	174	95.3	143
	9	149	224	140	209	131	196	111	167	91.6	137
	10	143	215	134	201	126	189	107	160	87.6	131
	11	137	206	129	193	120	181	102	153	83.4	125
	12	131	197	123	184	115	172	97.2	146	79.0	119
	13	125	187	116	175	109	163	92.1	138	74.5	112
	14	118	177	110	165	103	154	86.9	130	69.9	105
	15	111	167	104	156	96.9	145	81.6	122	65.3	98.0
	16	104	156	97.4	146	90.9	136	76.2	114	60.7	91.1
	17	97.4	146	91.0	137	84.8	127	71.0	106	56.2	84.3
	18	90.7	136	84.7	127	78.9	118	66.8	98.7	51.8	77.7
	19	84.0	126	78.5	118	73.0	110	60.7	91.1	47.5	71.2
	20	77.6	116	72.5	109	67.3	101	55.8	83.7	43.3	65.0
	21	71.3	107	66.6	99.9	61.8	92.7	51.0	76.4	39.3	58.9
	22	65.2	97.8	60.8	91.3	56.4	84.6	46.4	69.6	35.8	53.7
	23	59.6	89.4	55.7	83.5	51.6	77.4	42.5	63.7	32.8	49.1
	24	54.8	82.2	51.1	76.7	47.4	71.1	39.0	58.5	30.1	45.1
	25	50.5	75.7	47.1	70.7	43.7	65.5	36.0	53.9	27.7	41.6
	26	46.7	70.0	43.6	65.3	40.4	60.6	33.2	49.9	25.6	38.5
	27	43.3	64.9	40.4	60.6	37.4	56.2	30.8	46.2	23.8	35.7
	28	40.2	60.4	37.6	56.3	34.8	52.2	28.7	43.0	22.1	33.2
	29	37.5	56.3	35.0	52.5	32.5	48.7	26.7	40.1	20.6	30.9
	30	35.1	52.6	32.7	49.1	30.3	45.5	25.0	37.5	19.3	28.9
	32	30.8	46.2	28.8	43.1	26.7	40.0	21.9	32.9	16.9	25.4
	34	27.3	40.9	25.5	38.2	23.6	35.4	19.4	29.2	15.0	22.5
	36	24.3	36.5	22.7	34.1	21.1	31.6	17.3	26.0	13.4	20.1
	38							15.6	23.3	12.0	18.0
Properties											
M_n/Ω_b	$\phi_b M_n$ kip-ft	27.1	40.7	24.7	37.1	22.6	33.9	17.7	26.6	12.5	18.8
$P_e(KL)^2/10^4$	kip-in.^{2}	1040		967		896		738		569	

ASD	LRFD
Ω_c = 2.00	ϕ_c = 0.75

Note: Heavy line indicates KL/r equal to or greater than 200.

4

COMPOSITE HSS6

Table 4-17 (continued)
Available Strength in Axial Compression, kips
Concrete Filled Round HSS

F_y = 42 ksi
f'_c = 4 ksi

Shape		HSS6×											
		0.500		0.375		0.312		0.280		0.250		0.188	
t_{design}, in.		0.465		0.349		0.291		0.260		0.233		0.174	
Steel, lb/ft		29.4		22.5		19.0		17.1		15.4		11.7	
Design		P_n/Ω_c	$\phi_c P_n$	P_n/Ω_c	$\phi_c P_n$	P_n/Ω_c	$\phi_c P_n$	P_n/Ω_c	$\phi_c P_n$	P_n/Ω_c	$\phi_c P_n$	P_n/Ω_c	$\phi_c P_n$
		ASD	LRFD	ASD	LRFD	ASD	LRFD	ASD	LRFD	ASD	LRFD	ASD	LRFD
Effective length, KL (ft)	0	208	312	172	258	153	230	143	215	134	201	114	172
	1	208	312	172	258	153	230	143	214	134	201	114	171
	2	206	309	170	256	152	228	142	213	133	199	113	170
	3	204	305	168	252	150	225	140	210	131	197	112	168
	4	200	300	165	248	147	221	138	207	129	194	110	165
	5	195	293	162	243	144	216	135	202	126	189	107	161
	6	190	285	157	236	140	210	131	196	123	184	104	156
	7	184	276	152	228	136	204	127	190	119	178	101	151
	8	177	266	147	220	131	196	122	183	114	172	96.9	145
	9	170	255	141	211	125	188	117	175	110	164	92.7	139
	10	162	243	134	201	120	179	112	167	105	157	88.2	132
	11	154	231	127	191	113	170	106	159	99.2	149	83.5	125
	12	146	220	120	180	107	161	99.9	150	93.6	140	78.6	118
	13	138	207	113	169	101	151	93.8	141	88.0	132	73.6	110
	14	130	195	105	158	94.1	141	87.7	132	82.2	123	68.6	103
	15	121	182	98.1	147	87.5	131	81.6	122	76.4	115	63.6	95.5
	16	113	170	90.8	136	81.0	121	75.5	113	70.7	106	58.7	88.0
	17	105	157	83.6	125	74.6	112	69.5	104	65.1	97.7	53.8	80.8
	18	96.5	145	76.6	115	68.3	102	63.7	95.5	59.7	89.5	49.2	73.7
	19	88.6	133	70.2	105	62.3	93.5	58.0	87.0	54.4	81.6	44.6	66.9
	20	81.0	122	64.4	96.8	56.4	84.6	52.5	78.8	49.2	73.8	40.3	60.4
	21	73.6	111	58.7	88.2	51.2	76.7	47.6	71.4	44.6	66.9	36.5	54.8
	22	67.0	101	53.5	80.4	46.6	69.9	43.4	65.1	40.7	61.0	33.3	49.9
	23	61.3	92.2	48.9	73.5	42.6	64.0	39.7	59.6	37.2	55.8	30.4	45.7
	24	56.3	84.6	44.9	67.5	39.2	58.7	36.5	54.7	34.2	51.3	28.0	41.9
	25	51.9	78.0	41.4	62.3	36.1	54.1	33.6	50.4	31.5	47.2	25.8	38.6
	26	48.0	72.1	38.3	57.6	33.4	50.1	31.1	46.6	29.1	43.7	23.8	35.7
	28	41.4	62.2	33.0	49.6	28.8	43.2	26.8	40.2	25.1	37.7	20.5	30.8
	30	36.0	54.2	28.8	43.2	25.1	37.6	23.3	35.0	21.9	32.8	17.9	26.8
	32	31.7	47.6	25.3	38.0	22.0	33.0	20.5	30.8	19.2	28.8	15.7	23.6
	34									17.0	25.5	13.9	20.9
Properties													
M_n/Ω_b	$\phi_b M_n$ kip-ft	31.7	47.6	25.3	38.0	21.8	32.8	19.9	29.9	18.2	27.3	14.3	21.4
$P_e(KL)^2/10^4$	kip-in.^{2}	994		830		741		690		646		529	

ASD	LRFD
$\Omega_c = 2.00$	$\phi_c = 0.75$

Note: Heavy line indicates KL/r equal to or greater than 200.
Dashed line indicates the KL beyond which bare steel strength controls.

F_y = 42 ksi
f'_c = 4 ksi

Table 4-17 (continued)
Available Strength in Axial Compression, kips
Concrete Filled Round HSS

4
COMPOSITE
HSS6-
HSS5.563

Shape		HSS6×		HSS5.563×									
		0.125		0.500		0.375		0.258		0.188		0.134	
t_{design}, in.		0.116		0.465		0.349		0.240		0.174		0.124	
Steel, lb/ft		7.85		27.1		20.8		14.6		10.8		7.78	
Design		P_n/Ω_c	$\phi_c P_n$	P_n/Ω_c	$\phi_c P_n$	P_n/Ω_c	$\phi_c P_n$	P_n/Ω_c	$\phi_c P_n$	P_n/Ω_c	$\phi_c P_n$	P_n/Ω_c	$\phi_c P_n$
		ASD	LRFD	ASD	LRFD	ASD	LRFD	ASD	LRFD	ASD	LRFD	ASD	LRFD
Effective length, KL (ft)	0	94.6	142	188	283	155	233	123	184	103	154	86.7	130
	1	94.3	141	188	282	155	232	122	184	102	153	86.4	130
	2	93.5	140	186	279	154	230	121	182	101	152	85.6	128
	3	92.2	138	184	275	151	227	120	179	99.8	150	84.2	126
	4	90.4	136	180	270	148	223	117	176	97.7	147	82.4	124
	5	88.2	132	175	263	145	217	114	171	95.1	143	80.1	120
	6	85.5	128	170	256	140	210	111	166	92.0	138	77.3	116
	7	82.4	124	164	247	135	202	106	160	88.5	133	74.2	111
	8	79.0	119	158	237	129	194	102	153	84.6	127	70.7	106
	9	75.4	113	151	226	123	184	97.0	145	80.4	121	67.0	101
	10	71.4	107	143	215	116	174	91.7	138	75.9	114	63.1	94.6
	11	67.4	101	135	203	109	164	86.3	129	71.3	107	59.0	88.5
	12	63.1	94.7	127	191	102	153	80.7	121	66.5	99.8	54.9	82.3
	13	58.9	88.3	119	178	95.0	143	75.0	113	61.7	92.6	50.7	76.0
	14	54.6	81.9	110	166	87.8	132	69.4	104	56.9	85.4	46.5	69.8
	15	50.3	75.5	102	153	80.7	121	63.7	95.6	52.2	78.3	42.4	63.6
	16	46.1	69.2	93.9	141	74.2	112	58.2	87.4	47.5	71.3	38.4	57.7
	17	42.0	63.1	85.9	129	68.2	102	52.9	79.4	43.1	64.6	34.6	51.9
	18	38.1	57.2	78.1	117	62.3	93.6	47.8	71.6	38.7	58.0	30.9	46.4
	19	34.3	51.4	70.6	106	56.6	85.1	42.9	64.3	34.7	52.1	27.7	41.6
	20	30.9	46.4	63.7	95.7	51.1	76.8	38.7	58.0	31.3	47.0	25.0	37.6
	21	28.1	42.1	57.8	86.8	46.3	69.6	35.1	52.6	28.4	42.6	22.7	34.1
	22	25.6	38.3	52.6	79.1	42.2	63.5	32.0	47.9	25.9	38.9	20.7	31.0
	23	23.4	35.1	48.2	72.4	38.6	58.1	29.2	43.9	23.7	35.5	18.9	28.4
	24	21.5	32.2	44.2	66.5	35.5	53.3	26.9	40.3	21.8	32.6	17.4	26.1
	25	19.8	29.7	40.8	61.3	32.7	49.1	24.8	37.1	20.1	30.1	16.0	24.0
	26	18.3	27.5	37.7	56.6	30.2	45.4	22.9	34.3	18.5	27.8	14.8	22.2
	28	15.8	23.7	32.5	48.8	26.1	39.2	19.7	29.6	16.0	24.0	12.8	19.2
	30	13.7	20.6	28.3	42.5	22.7	34.1	17.2	25.8	13.9	20.9	11.1	16.7
	32	12.1	18.1									9.78	14.7
	34	10.7	16.1										
Properties													
M_n/Ω_b	$\phi_b M_n$ kip-ft	10.1	15.2	26.7	40.2	21.4	32.2	15.8	23.8	12.1	18.2	9.11	13.7
$P_e(KL)^2/10^4$	kip-in.^{2}	406		769		643		508		412		329	

ASD	LRFD
Ω_c = 2.00	ϕ_c = 0.75

Note: Heavy line indicates KL/r equal to or greater than 200.
Dashed line indicates the KL beyond which bare steel strength controls.

4

COMPOSITE HSS5.500-HSS5

Table 4-17 (continued)
Available Strength in Axial Compression, kips
Concrete Filled Round HSS

F_y = 42 ksi
f'_c = 4 ksi

Shape		HSS5.500×						HSS5×					
		0.500		0.375		0.258		0.500		0.375		0.312	
t_{design}, in.		0.465		0.349		0.240		0.465		0.349		0.291	
Steel, lb/ft		26.7		20.6		14.5		24.1		18.5		15.6	
Design		P_n/Ω_c ASD	$\phi_c P_n$ LRFD	P_n/Ω_c ASD	$\phi_c P_n$ LRFD	P_n/Ω_c ASD	$\phi_c P_n$ LRFD	P_n/Ω_c ASD	$\phi_c P_n$ LRFD	P_n/Ω_c ASD	$\phi_c P_n$ LRFD	P_n/Ω_c ASD	$\phi_c P_n$ LRFD
Effective length, KL (ft)	0	186	279	153	230	121	181	166	250	135	202	119	179
	1	186	278	153	229	121	181	166	249	134	201	119	179
	2	183	275	151	227	120	179	164	247	133	199	118	177
	3	181	271	149	224	118	177	161	243	130	196	116	173
	4	177	266	146	219	115	173	158	237	127	191	113	169
	5	173	260	142	213	112	168	153	230	123	185	109	164
	6	168	252	137	206	109	163	147	221	118	177	105	157
	7	162	243	132	198	105	157	141	212	113	169	100	150
	8	155	233	126	190	99.9	150	134	201	107	160	94.9	142
	9	148	222	120	180	95.0	143	126	190	101	151	89.3	134
	10	140	211	114	170	89.8	135	118	178	93.9	141	83.4	125
	11	133	199	107	160	84.3	126	110	166	87.1	131	77.4	116
	12	124	187	99.6	149	78.7	118	102	153	80.3	121	71.3	107
	13	116	174	92.5	139	73.1	110	93.5	141	74.1	111	65.2	97.7
	14	108	162	85.3	128	67.4	101	85.3	128	67.9	102	59.1	88.7
	15	99.5	150	78.4	118	61.8	92.7	77.3	116	61.8	92.8	53.3	79.9
	16	91.3	137	72.3	109	56.4	84.5	69.5	104	55.8	83.9	48.0	72.2
	17	83.4	125	66.2	99.6	51.1	76.6	62.0	93.2	50.2	75.4	43.2	65.0
	18	75.7	114	60.4	90.8	45.9	68.9	55.3	83.1	44.7	67.2	38.6	58.1
	19	68.2	102	54.7	82.2	41.2	61.8	49.6	74.6	40.1	60.3	34.7	52.1
	20	61.5	92.5	49.4	74.2	37.2	55.8	44.8	67.3	36.2	54.5	31.3	47.0
	21	55.8	83.9	44.8	67.3	33.8	50.6	40.6	61.0	32.9	49.4	28.4	42.7
	22	50.9	76.4	40.8	61.3	30.8	46.1	37.0	55.6	29.9	45.0	25.9	38.9
	23	46.5	69.9	37.3	56.1	28.1	42.2	33.9	50.9	27.4	41.2	23.7	35.6
	24	42.7	64.2	34.3	51.5	25.8	38.8	31.1	46.7	25.2	37.8	21.7	32.7
	25	39.4	59.2	31.6	47.5	23.8	35.7	28.7	43.1	23.2	34.9	20.0	30.1
	26	36.4	54.7	29.2	43.9	22.0	33.0	26.5	39.8	21.4	32.2	18.5	27.8
	28	31.4	47.2	25.2	37.9	19.0	28.5						
	30			21.9	33.0	16.5	24.8						
Properties													
M_n/Ω_b	$\phi_b M_n$ kip-ft	26.1	39.2	20.9	31.4	15.4	23.2	21.0	31.6	16.9	25.4	14.6	22.0
$P_e(KL)^2/10^4$	kip-in.^{2}	739		619		489		534		450		401	

ASD	LRFD
$\Omega_c = 2.00$	$\phi_c = 0.75$

Note: Heavy line indicates KL/r equal to or greater than 200.
Dashed line indicates the KL beyond which bare steel strength controls.

F_y = 42 ksi
f'_c = 4 ksi

Table 4-17 (continued)
Available Strength in Axial Compression, kips
Concrete Filled Round HSS

4
COMPOSITE
HSS5-
HSS4.500

Shape		HSS5×								HSS4.500×			
		0.258		0.250		0.188		0.125		0.375		0.337	
t_{design}, in.		0.240		0.233		0.174		0.116		0.349		0.313	
Steel, lb/ft		13.1		12.7		9.67		6.51		16.5		15.0	
Design		P_n/Ω_c	$\phi_c P_n$	P_n/Ω_c	$\phi_c P_n$	P_n/Ω_c	$\phi_c P_n$	P_n/Ω_c	$\phi_c P_n$	P_n/Ω_c	$\phi_c P_n$	P_n/Ω_c	$\phi_c P_n$
		ASD	LRFD	ASD	LRFD	ASD	LRFD	ASD	LRFD	ASD	LRFD	ASD	LRFD
Effective length, KL (ft)	0	106	159	104	156	87.7	132	71.3	107	117	176	109	163
	1	105	158	104	155	87.4	131	71.0	107	117	175	108	163
	2	104	157	102	154	86.5	130	70.2	105	115	173	107	160
	3	103	154	101	151	84.9	127	68.8	103	112	169	105	157
	4	100	150	98.2	147	82.7	124	67.0	100	109	163	101	152
	5	96.8	145	95.0	143	80.1	120	64.7	97.0	105	157	97.4	146
	6	93.0	140	91.4	137	76.9	115	62.0	92.9	99.6	149	92.7	139
	7	88.8	133	87.2	131	73.3	110	58.9	88.3	94.0	141	87.5	131
	8	84.1	126	82.6	124	69.4	104	55.5	83.3	88.1	132	81.8	123
	9	79.2	119	77.7	117	65.2	97.8	52.0	78.0	82.1	123	75.8	114
	10	73.9	111	72.6	109	60.8	91.3	48.3	72.4	76.0	114	69.7	105
	11	68.6	103	67.3	101	56.3	84.5	44.5	66.7	69.7	105	63.6	95.5
	12	63.1	94.7	62.0	93.0	51.8	77.7	40.7	61.0	63.5	95.4	57.9	87.1
	13	57.7	86.6	56.7	85.0	47.3	70.9	36.9	55.3	57.3	86.1	52.4	78.7
	14	52.4	78.6	51.4	77.1	42.8	64.2	33.2	49.8	51.3	77.1	47.0	70.6
	15	47.2	70.8	46.3	69.5	38.5	57.8	29.6	44.5	45.6	68.5	41.8	62.8
	16	42.2	63.4	41.4	62.2	34.4	51.6	26.2	39.3	40.1	60.3	36.8	55.3
	17	37.5	56.2	36.8	55.1	30.4	45.7	23.2	34.8	35.5	53.4	32.6	49.0
	18	33.4	50.1	32.8	49.2	27.2	40.7	20.7	31.1	31.7	47.6	29.1	43.7
	19	30.0	45.0	29.4	44.1	24.4	36.6	18.6	27.9	28.4	42.7	26.1	39.2
	20	27.1	40.6	26.6	39.8	22.0	33.0	16.8	25.2	25.7	38.6	23.5	35.4
	21	24.5	36.8	24.1	36.1	20.0	29.9	15.2	22.8	23.3	35.0	21.4	32.1
	22	22.4	33.5	21.9	32.9	18.2	27.3	13.9	20.8	21.2	31.9	19.5	29.3
	23	20.5	30.7	20.1	30.1	16.6	24.9	12.7	19.0	19.4	29.2	17.8	26.8
	24	18.8	28.2	18.4	27.7	15.3	22.9	11.6	17.5	17.8	26.8	16.4	24.6
	25	17.3	26.0	17.0	25.5	14.1	21.1	10.7	16.1				
	26	16.0	24.0	15.7	23.6	13.0	19.5	9.92	14.9				
	28	13.8	20.7	13.5	20.3	11.2	16.8	8.56	12.8				
Properties													
M_n/Ω_b	$\phi_b M_n$ kip-ft	12.5	18.8	12.2	18.4	9.61	14.4	6.84	10.3	13.4	20.1	12.3	18.5
$P_e(KL)^2/10^4$	kip-in.^{2}	355		349		289		220		314		294	

ASD	LRFD
Ω_c = 2.00	ϕ_c = 0.75

Note: Heavy line indicates KL/r equal to or greater than 200.
Dashed line indicates the KL beyond which bare steel strength controls.

4

COMPOSITE HSS4.500-HSS4

Table 4-17 (continued)
Available Strength in Axial Compression, kips
Concrete Filled Round HSS

F_y = 42 ksi
f'_c = 4 ksi

Shape		HSS4.500×						HSS4×			
		0.237		0.188		0.125		0.313		0.250	
t_{design}, in.		0.220		0.174		0.116		0.291		0.233	
Steel, lb/ft		10.8		8.67		5.85		12.3		10.0	
Design		P_n/Ω_c ASD	$\phi_c P_n$ LRFD	P_n/Ω_c ASD	$\phi_c P_n$ LRFD	P_n/Ω_c ASD	$\phi_c P_n$ LRFD	P_n/Ω_c ASD	$\phi_c P_n$ LRFD	P_n/Ω_c ASD	$\phi_c P_n$ LRFD
Effective length, KL (ft)	0	86.8	130	75.3	113	60.8	91.2	88.6	133	76.6	115
	1	86.4	130	75.0	112	60.5	90.7	88.1	132	76.2	114
	2	85.2	126	74.0	111	59.6	89.5	86.6	130	74.9	112
	3	83.4	125	72.3	108	58.2	87.4	84.2	126	72.8	109
	4	80.8	121	70.1	105	56.3	84.5	80.9	121	70.0	105
	5	77.6	116	67.4	101	54.0	81.0	76.9	115	66.5	99.8
	6	73.9	111	64.1	96.2	51.3	76.9	72.3	108	62.6	93.8
	7	69.8	105	60.5	90.8	48.2	72.3	67.2	101	58.2	87.2
	8	65.3	98.0	56.6	84.9	44.9	67.4	61.7	92.6	53.5	80.2
	9	60.6	90.8	52.5	78.7	41.4	62.2	56.5	84.9	48.6	72.9
	10	55.7	83.5	48.2	72.3	37.9	56.8	51.3	77.1	43.7	65.5
	11	50.7	76.1	43.9	65.9	34.3	51.4	46.1	69.3	38.8	58.2
	12	45.8	68.7	39.6	59.4	30.8	46.1	41.0	61.7	34.1	51.1
	13	41.0	61.5	35.5	53.2	27.3	41.0	36.2	54.3	29.8	44.8
	14	36.4	54.5	31.4	47.2	24.0	36.1	31.5	47.3	26.0	39.1
	15	31.9	47.9	27.6	41.3	21.0	31.4	27.4	41.2	22.6	34.0
	16	28.0	42.1	24.2	36.3	18.4	27.6	24.1	36.2	19.9	29.9
	17	24.8	37.3	21.5	32.2	16.3	24.5	21.3	32.1	17.6	26.5
	18	22.2	33.2	19.1	28.7	14.6	21.8	19.0	28.6	15.7	23.6
	19	19.9	29.8	17.2	25.8	13.1	19.6	17.1	25.7	14.1	21.2
	20	17.9	26.9	15.5	23.3	11.8	17.7	15.4	23.2	12.7	19.1
	21	16.3	24.4	14.1	21.1	10.7	16.0	14.0	21.0	11.6	17.4
	22	14.8	22.2	12.8	19.2	9.74	14.6	12.7	19.1	10.5	15.8
	23	13.6	20.4	11.7	17.6	8.92	13.4				
	24	12.5	18.7	10.8	16.1	8.19	12.3				
	25	11.5	17.2	9.92	14.9	7.55	11.3				
Properties											
M_b/Ω_b	$\phi_b M_n$ kip-ft	9.27	13.9	7.65	11.5	5.45	8.19	8.94	13.4	7.50	11.3
$P_e(KL)^2/10^4$	kip-in.^{2}	236		204		155		189		164	

ASD	LRFD
Ω_c = 2.00	ϕ_c = 0.75

Note: Heavy line indicates KL/r equal to or greater than 200.
Dashed line indicates the KL beyond which bare steel strength controls.

Table 4-17 (continued)

F_y = 42 ksi
f'_c = 4 ksi

Available Strength in Axial Compression, kips

Concrete Filled Round HSS

4 COMPOSITE HSS4

Shape		HSS4×									
		0.237		0.226		0.220		0.188		0.125	
t_{design}, in.		0.220		0.210		0.205		0.174		0.116	
Steel, lb/ft		9.53		9.12		8.89		7.66		5.18	
Design		P_n/Ω_c ASD	$\phi_c P_n$ LRFD	P_n/Ω_c ASD	$\phi_c P_n$ LRFD	P_n/Ω_c ASD	$\phi_c P_n$ LRFD	P_n/Ω_c ASD	$\phi_c P_n$ LRFD	P_n/Ω_c ASD	$\phi_c P_n$ LRFD
Effective length, KL (ft)	0	73.7	111	71.6	107	70.5	106	63.8	95.7	51.0	76.5
	1	73.3	110	71.2	107	70.1	105	63.4	95.2	50.7	76.0
	2	72.1	108	70.0	105	68.9	103	62.4	93.6	49.8	74.7
	3	70.1	105	68.1	102	67.0	101	60.6	91.0	48.4	72.6
	4	67.4	101	65.5	98.2	64.4	96.6	58.3	87.5	46.4	69.6
	5	64.1	96.1	62.2	93.4	61.3	91.9	55.4	83.1	44.0	66.0
	6	60.2	90.4	58.5	87.8	57.6	86.4	52.1	78.2	41.3	61.9
	7	56.0	84.0	54.4	81.6	53.5	80.3	48.4	72.6	38.2	57.4
	8	51.5	77.2	50.0	75.0	49.2	73.8	44.5	66.8	35.0	52.5
	9	46.8	70.2	45.5	68.2	44.8	67.1	40.4	60.7	31.7	47.5
	10	42.1	63.1	40.9	61.3	40.2	60.3	36.3	54.5	28.3	42.5
	11	37.4	56.1	36.3	54.5	35.8	53.6	32.3	48.4	25.0	37.6
	12	32.9	49.3	31.9	47.9	31.4	47.2	28.4	42.6	21.9	32.8
	13	28.6	42.9	27.7	41.6	27.3	41.0	24.6	36.9	18.8	28.3
	14	25.0	37.5	23.9	35.9	23.5	35.3	21.2	31.9	16.2	24.4
	15	21.7	32.7	20.8	31.3	20.5	30.8	18.5	27.8	14.2	21.2
	16	19.1	28.7	18.3	27.5	18.0	27.0	16.3	24.4	12.4	18.7
	17	16.9	25.4	16.2	24.4	16.0	23.9	14.4	21.6	11.0	16.5
	18	15.1	22.7	14.5	21.7	14.2	21.4	12.8	19.3	9.83	14.7
	19	13.6	20.4	13.0	19.5	12.8	19.2	11.5	17.3	8.82	13.2
	20	12.2	18.4	11.7	17.6	11.5	17.3	10.4	15.6	7.96	11.9
	21	11.1	16.7	10.6	16.0	10.5	15.7	9.44	14.2	7.22	10.8
	22	10.1	15.2	9.68	14.6	9.53	14.3	8.60	12.9	6.58	9.87
Properties											
M_n/Ω_b	$\phi_b M_n$ kip-ft	7.16	10.8	6.90	10.4	6.76	10.2	5.92	8.89	4.23	6.35
$P_e(KL)^2/10^4$	kip-in.^{2}	158		154		152		137		105	
ASD	LRFD	Note: Heavy line indicates KL/r equal to or greater than 200. Dashed line indicates the KL beyond which bare steel strength controls.									
Ω_c = 2.00	ϕ_c = 0.75										

5

COMPOSITE HSS18-HSS16

Table 4-18
Available Strength in Axial Compression, kips
Concrete Filled Round HSS

F_y = 42 ksi

f'_c = 5 ksi

Shape		HSS18×				HSS16×							
		0.500		0.375		0.625		0.500		0.438		0.375	
t_{design}, in.		0.465		0.349		0.581		0.465		0.407		0.349	
Steel, lb/ft		93.5		70.7		103		82.9		72.9		62.6	
Design		P_n/Ω_c	$\phi_c P_n$	P_n/Ω_c	$\phi_c P_n$	P_n/Ω_c	$\phi_c P_n$	P_n/Ω_c	$\phi_c P_n$	P_n/Ω_c	$\phi_c P_n$	P_n/Ω_c	$\phi_c P_n$
		ASD	LRFD	ASD	LRFD	ASD	LRFD	ASD	LRFD	ASD	LRFD	ASD	LRFD
Effective length, KL (ft)	0	1080	1620	966	1450	1000	1500	900	1350	848	1270	798	1200
	6	1070	1600	954	1430	987	1480	888	1330	836	1250	786	1180
	7	1060	1600	950	1420	983	1470	883	1320	832	1250	782	1170
	8	1060	1590	945	1420	977	1470	878	1320	827	1240	777	1170
	9	1050	1580	940	1410	971	1460	872	1310	821	1230	771	1160
	10	1050	1570	933	1400	964	1450	866	1300	815	1220	765	1150
	11	1040	1560	927	1390	956	1430	859	1290	808	1210	759	1140
	12	1030	1550	920	1380	948	1420	851	1280	800	1200	751	1130
	13	1020	1540	912	1370	939	1410	843	1260	792	1190	744	1120
	14	1020	1520	904	1360	930	1390	834	1250	784	1180	735	1100
	15	1010	1510	895	1340	920	1380	824	1240	775	1160	726	1090
	16	997	1500	885	1330	909	1360	814	1220	765	1150	717	1080
	17	986	1480	876	1310	898	1350	804	1210	755	1130	707	1060
	18	976	1460	865	1300	886	1330	793	1190	744	1120	697	1050
	19	964	1450	854	1280	874	1310	781	1170	733	1100	686	1030
	20	952	1430	843	1260	861	1290	770	1150	722	1080	675	1010
	21	940	1410	832	1250	848	1270	757	1140	710	1070	664	996
	22	927	1390	820	1230	834	1250	745	1120	698	1050	652	978
	23	914	1370	807	1210	820	1230	732	1100	685	1030	640	960
	24	901	1350	794	1190	806	1210	718	1080	672	1010	627	941
	25	887	1330	781	1170	791	1190	705	1060	659	989	615	922
	26	872	1310	768	1150	776	1160	691	1040	646	969	602	903
	27	858	1290	754	1130	761	1140	676	1010	632	948	589	883
	28	843	1260	740	1110	745	1120	662	993	618	928	575	863
	29	828	1240	726	1090	729	1090	647	971	604	907	562	843
	30	813	1220	712	1070	713	1070	632	949	590	885	548	822
	32	781	1170	682	1020	681	1020	602	904	561	842	520	781
	34	749	1120	653	979	648	972	572	858	532	798	493	739
	36	717	1070	622	933	614	922	541	812	503	755	465	697
	38	684	1030	592	888	581	872	511	766	474	711	437	655
	40	651	976	561	842	548	822	481	721	445	668	409	614
Properties													
M_n/Ω_b	$\phi_b M_n$ kip-ft	357	536	280	421	333	500	277	416	247	372	217	327
$P_e(KL)^2/10^4$	kip-in.^{2}	41100		34300		32000		27700		25400		23100	

ASD	LRFD
Ω_c = 2.00	ϕ_c = 0.75

Table 4-18 (continued)

F_y = 42 ksi
f'_c = 5 ksi

Available Strength in Axial Compression, kips

Concrete Filled Round HSS

5

COMPOSITE HSS16-HSS14

Shape		HSS16×				HSS14×							
		0.312		0.250[1]		0.625		0.500		0.375		0.312	
t_{design}, in.		0.291		0.233		0.581		0.465		0.349		0.291	
Steel, lb/ft		52.3		42.1		89.4		72.2		54.6		45.7	
Design		P_n/Ω_c ASD	$\phi_c P_n$ LRFD	P_n/Ω_c ASD	$\phi_c P_n$ LRFD	P_n/Ω_c ASD	$\phi_c P_n$ LRFD	P_n/Ω_c ASD	$\phi_c P_n$ LRFD	P_n/Ω_c ASD	$\phi_c P_n$ LRFD	P_n/Ω_c ASD	$\phi_c P_n$ LRFD
Effective length, KL (ft)	0	746	1120	692	1040	822	1230	734	1100	645	967	598	898
	6	734	1100	680	1020	808	1210	721	1080	633	949	587	880
	7	730	1090	676	1010	803	1200	717	1070	628	943	583	874
	8	725	1090	672	1010	797	1200	711	1070	624	935	578	867
	9	720	1080	666	1000	790	1190	705	1060	618	927	572	859
	10	714	1070	661	991	783	1170	699	1050	612	918	566	850
	11	707	1060	654	981	775	1160	691	1040	605	907	560	840
	12	700	1050	647	971	766	1150	683	1030	598	897	553	829
	13	693	1040	640	960	757	1140	675	1010	590	885	545	818
	14	685	1030	632	948	747	1120	666	999	581	872	537	806
	15	676	1010	624	936	737	1110	656	984	573	859	529	793
	16	667	1000	615	922	726	1090	646	969	563	845	520	780
	17	657	986	606	909	714	1070	636	953	554	830	510	766
	18	648	971	596	894	702	1050	625	937	543	815	501	751
	19	637	956	586	879	690	1030	613	920	533	799	491	736
	20	626	940	576	863	677	1020	601	902	522	783	480	720
	21	615	923	565	847	664	995	589	884	511	766	470	704
	22	604	906	554	831	650	975	576	865	499	749	459	688
	23	592	888	542	814	636	954	564	845	488	731	447	671
	24	580	870	531	796	622	932	551	826	476	713	436	654
	25	568	852	519	779	607	910	537	806	463	695	424	637
	26	555	833	507	760	592	888	524	786	451	677	413	619
	27	543	814	495	742	577	866	510	765	439	658	401	601
	28	530	795	482	724	562	843	496	744	426	639	389	583
	29	517	775	470	705	547	820	482	723	413	620	377	565
	30	504	756	457	686	531	797	468	702	401	601	365	547
	32	477	716	432	648	500	750	440	660	375	563	341	511
	34	451	676	407	610	469	704	412	618	350	525	317	475
	36	424	636	381	572	438	657	384	576	325	487	293	440
	38	397	596	356	534	408	612	357	535	300	451	270	406
	40	371	557	332	497	378	567	330	495	277	415	248	372
Properties													
M_n/Ω_b	$\phi_b M_n$ kip-ft	186	280	153	229	248	373	207	311	163	245	140	210
$P_e(KL)^2/10^4$	kip-in.^{2}	20600		18100		20400		17700		14700		13100	
ASD	LRFD	[1] Shape is noncompact for flexure with F_y = 42 ksi.											
Ω_c = 2.00	ϕ_c = 0.75												

5

COMPOSITE HSS14-HSS10.750

Table 4-18 (continued)
Available Strength in Axial Compression, kips
Concrete Filled Round HSS

F_y = 42 ksi
f'_c = 5 ksi

Shape		HSS14×		HSS12.750×						HSS10.750×			
		0.250		0.500		0.375		0.250		0.500		0.375	
t_{design}, in.		0.233		0.465		0.349		0.233		0.465		0.349	
Steel, lb/ft		36.8		65.5		49.6		33.4		54.8		41.6	
Design		P_n/Ω_c	$\phi_c P_n$	P_n/Ω_c	$\phi_c P_n$	P_n/Ω_c	$\phi_c P_n$	P_n/Ω_c	$\phi_c P_n$	P_n/Ω_c	$\phi_c P_n$	P_n/Ω_c	$\phi_c P_n$
		ASD	LRFD	ASD	LRFD	ASD	LRFD	ASD	LRFD	ASD	LRFD	ASD	LRFD
Effective length, KL (ft)	0	554	831	637	955	557	835	474	711	495	742	428	642
	6	542	813	623	935	544	816	462	693	481	721	415	622
	7	538	807	618	928	540	810	458	687	475	713	410	616
	8	533	800	613	919	535	802	454	680	470	704	405	608
	9	528	792	607	910	529	794	448	672	463	695	399	599
	10	522	784	600	900	523	784	443	664	456	684	393	589
	11	516	774	593	889	516	774	436	654	448	672	386	579
	12	509	764	585	877	509	763	429	644	440	660	378	568
	13	502	753	576	864	501	751	422	633	431	646	370	556
	14	494	741	567	850	492	739	414	622	421	632	362	543
	15	486	729	557	836	484	725	406	609	412	617	353	530
	16	477	716	547	821	474	711	398	597	401	602	344	516
	17	468	702	536	805	465	697	389	583	391	586	334	502
	18	459	688	525	788	455	682	380	570	380	569	325	487
	19	449	673	514	771	444	666	370	555	368	552	315	472
	20	439	658	502	753	434	650	360	541	357	535	304	456
	21	428	643	490	735	423	634	350	526	345	517	294	441
	22	418	627	478	717	411	617	340	511	333	499	283	425
	23	407	611	465	698	400	600	330	495	321	481	273	409
	24	396	594	453	679	388	583	320	479	309	463	262	393
	25	385	578	440	659	377	565	309	464	297	445	251	377
	26	374	561	427	640	365	547	298	448	284	427	240	361
	27	362	544	413	620	353	530	288	432	272	408	230	345
	28	351	527	400	600	341	512	277	416	260	390	219	329
	29	340	509	387	580	329	494	267	400	248	373	209	313
	30	328	492	374	560	317	476	256	384	237	355	199	298
	32	305	458	347	521	294	440	235	353	214	321	179	268
	34	283	424	321	481	270	406	215	322	192	288	159	239
	36	261	391	295	443	248	372	195	293	171	257	142	213
	38	239	359	271	406	226	339	176	264	153	230	128	191
	40	218	328	247	370	204	307	159	238	139	208	115	173
Properties													
M_n/Ω_b	$\phi_b M_n$ kip-ft	116	174	169	254	133	200	94.6	142	116	175	92.0	138
$P_e(KL)^2/10^4$	kip-in.^{2}	11500		13000		10700		8350		7280		6050	

ASD	LRFD
Ω_c = 2.00	ϕ_c = 0.75

F_y = 42 ksi
f'_c = 5 ksi

Table 4-18 (continued)
Available Strength in Axial Compression, kips
Concrete Filled Round HSS

5
COMPOSITE
HSS10.750-HSS10

Shape		HSS10.750×		HSS10×									
		0.250		0.625		0.500		0.375		0.312		0.250	
t_{design}, in.		0.233		0.581		0.465		0.349		0.291		0.233	
Steel, lb/ft		28.1		62.6		50.8		38.6		32.3		26.1	
Design		P_n/Ω_c ASD	$\phi_c P_n$ LRFD	P_n/Ω_c ASD	$\phi_c P_n$ LRFD	P_n/Ω_c ASD	$\phi_c P_n$ LRFD	P_n/Ω_c ASD	$\phi_c P_n$ LRFD	P_n/Ω_c ASD	$\phi_c P_n$ LRFD	P_n/Ω_c ASD	$\phi_c P_n$ LRFD
Effective length, KL (ft)	0	359	538	507	760	445	668	384	576	352	528	320	480
	6	347	521	490	735	431	646	371	556	339	509	308	462
	7	343	515	484	726	425	638	366	549	335	503	304	455
	8	338	507	477	716	419	629	361	541	330	495	299	448
	9	333	499	470	705	413	619	355	532	324	487	294	440
	10	327	491	461	692	405	608	348	522	318	478	288	432
	11	321	481	452	679	397	596	341	512	312	468	281	422
	12	314	471	443	664	389	583	334	501	305	457	275	412
	13	307	460	432	649	380	570	326	489	297	446	268	401
	14	299	449	422	632	370	556	317	476	289	434	260	390
	15	291	437	410	615	360	541	308	463	281	421	252	378
	16	283	425	399	598	350	525	299	449	272	408	244	366
	17	275	412	386	580	339	509	290	435	263	395	236	354
	18	266	399	374	561	328	492	280	420	254	382	227	341
	19	257	385	361	542	317	476	270	405	245	368	219	328
	20	248	371	348	522	306	458	260	390	236	354	210	315
	21	238	358	335	502	294	441	250	375	226	339	201	302
	22	229	344	322	483	282	424	240	359	217	325	192	288
	23	220	330	308	463	271	406	229	344	207	311	183	275
	24	210	315	295	443	259	388	219	329	198	296	174	262
	25	201	301	282	423	247	371	209	313	188	282	166	248
	26	192	288	269	403	236	354	199	298	179	268	157	236
	27	182	274	256	383	224	336	189	283	170	254	148	223
	28	173	260	243	364	213	319	179	268	160	241	140	210
	29	164	247	230	345	202	303	169	254	152	227	132	198
	30	156	234	218	327	191	286	160	240	143	214	124	186
	32	139	208	193	290	170	254	141	212	126	189	109	163
	34	123	184	173	260	150	225	125	188	112	167	96.5	145
	36	110	164	155	232	134	201	112	167	99.5	149	86.1	129
	38	98.3	147	139	208	120	180	100	150	89.3	134	77.3	116
	40	88.7	133	125	188	109	163	90.4	136	80.6	121	69.7	105
Properties													
M_n/Ω_b	$\phi_b M_n$ kip-ft	65.6	98.6	119	178	99.3	149	78.6	118	67.6	102	56.1	84.3
$P_e(KL)^2/10^4$	kip-in.^{2}	4660		6510		5700		4750		4230		3660	

ASD	LRFD
Ω_c = 2.00	ϕ_c = 0.75

Note: Dashed line indicates the KL beyond which bare steel strength controls.

5

COMPOSITE
HSS10-
HSS9.625

Table 4-18 (continued)
Available Strength in Axial Compression, kips
Concrete Filled Round HSS

F_y = 42 ksi
f'_c = 5 ksi

Shape		HSS10×		HSS9.625×									
		0.188		0.500		0.375		0.312		0.250		0.188	
t_{design}, in.		0.174		0.465		0.349		0.291		0.233		0.174	
Steel, lb/ft		19.7		48.8		37.1		31.1		25.1		19.0	
Design		P_n/Ω_c ASD	$\phi_c P_n$ LRFD	P_n/Ω_c ASD	$\phi_c P_n$ LRFD	P_n/Ω_c ASD	$\phi_c P_n$ LRFD	P_n/Ω_c ASD	$\phi_c P_n$ LRFD	P_n/Ω_c ASD	$\phi_c P_n$ LRFD	P_n/Ω_c ASD	$\phi_c P_n$ LRFD
Effective length, KL (ft)	0	287	430	422	634	363	544	332	498	301	451	269	404
	6	275	413	407	611	349	524	319	479	289	433	258	387
	7	271	407	402	603	345	517	315	472	285	427	254	380
	8	267	400	396	594	339	509	310	464	280	420	249	374
	9	262	392	389	583	333	500	304	456	275	412	244	366
	10	256	384	382	572	327	490	298	447	269	403	239	358
	11	250	375	373	560	320	480	291	437	262	394	233	349
	12	244	365	365	547	312	469	284	426	256	384	226	339
	13	237	355	356	534	304	456	277	415	249	373	220	329
	14	230	345	346	519	296	444	269	403	241	362	212	319
	15	222	334	336	504	287	431	260	391	233	350	205	308
	16	215	322	326	488	278	417	252	378	225	338	198	296
	17	207	310	315	472	269	403	243	365	217	326	190	285
	18	199	298	304	456	259	389	234	351	209	313	182	273
	19	191	286	293	439	249	374	225	337	200	301	174	261
	20	183	274	281	422	239	359	216	324	192	288	166	249
	21	174	261	270	405	229	344	206	310	183	275	158	237
	22	166	249	258	387	219	329	197	296	174	262	150	225
	23	158	237	247	370	209	314	188	282	166	249	142	213
	24	150	225	235	353	199	299	179	268	157	236	134	202
	25	142	212	224	336	189	284	169	254	149	223	127	190
	26	134	201	212	319	180	269	160	240	141	211	119	179
	27	126	189	201	302	170	255	151	227	132	199	112	168
	28	118	178	190	286	161	241	143	214	124	187	105	157
	29	111	166	180	269	151	227	134	201	117	175	97.4	146
	30	104	156	169	254	142	213	126	189	109	164	91.1	137
	32	91.1	137	149	223	125	188	111	166	95.8	144	80.0	120
	34	80.7	121	132	198	111	166	97.9	147	84.9	127	70.9	106
	36	72.0	108	118	177	98.8	148	87.3	131	75.7	114	63.2	94.8
	38	64.6	96.9	106	158	88.7	133	78.4	118	68.0	102	56.8	85.1
	40	58.3	87.5	95.3	143	80.0	120	70.7	106	61.3	92.0	51.2	76.8
Properties													
M_n/Ω_b	$\phi_b M_n$ kip-ft	43.8	65.8	91.3	137	72.3	109	62.2	93.5	51.7	77.7	40.3	60.6
$P_e(KL)^2/10^4$	kip-in.^{2}	3060		5010		4210		3720		3220		2690	

ASD	LRFD
Ω_c = 2.00	ϕ_c = 0.75

Table 4-18 (continued)

F_y = 42 ksi
f'_c = 5 ksi

Available Strength in Axial Compression, kips

Concrete Filled Round HSS

5

COMPOSITE
HSS8.625

Shape		HSS8.625×											
		0.625		0.500		0.375		0.322		0.250		0.188	
t_{design}, in.		0.581		0.465		0.349		0.300		0.233		0.174	
Steel, lb/ft		53.5		43.4		33.1		28.6		22.4		17.0	
Design		P_n/Ω_c	$\phi_c P_n$	P_n/Ω_c	$\phi_c P_n$	P_n/Ω_c	$\phi_c P_n$	P_n/Ω_c	$\phi_c P_n$	P_n/Ω_c	$\phi_c P_n$	P_n/Ω_c	$\phi_c P_n$
		ASD	LRFD	ASD	LRFD	ASD	LRFD	ASD	LRFD	ASD	LRFD	ASD	LRFD
Effective length, KL (ft)	0	413	619	360	541	308	462	285	427	253	380	225	337
	6	394	591	344	517	294	441	272	408	241	361	213	320
	7	388	582	339	508	289	433	267	401	237	355	209	314
	8	380	571	333	499	284	425	262	393	232	348	205	307
	9	372	559	326	488	277	416	256	385	227	340	200	300
	10	364	545	318	477	271	406	250	375	221	331	194	291
	11	354	531	310	464	264	395	243	365	214	322	188	283
	12	344	516	301	451	256	384	236	354	208	312	182	273
	13	333	500	291	437	248	372	229	343	201	301	176	263
	14	322	483	282	423	239	359	221	331	194	290	169	253
	15	310	466	272	408	231	346	212	319	186	279	162	243
	16	298	448	261	392	222	333	204	306	178	267	155	232
	17	286	429	251	376	213	319	195	293	170	256	147	221
	18	274	411	240	360	203	305	187	280	162	244	140	210
	19	261	392	229	344	194	291	178	267	154	232	133	199
	20	249	373	218	327	184	277	169	254	146	220	125	188
	21	236	354	207	311	175	263	160	240	138	208	118	177
	22	224	336	196	294	166	248	151	227	130	196	111	166
	23	211	317	185	278	156	235	143	214	123	184	104	156
	24	199	299	175	262	147	221	134	201	115	172	96.9	145
	25	187	281	164	247	138	207	126	189	108	161	90.2	135
	26	177	266	154	231	130	194	118	177	100	150	83.6	125
	27	167	251	144	216	121	182	110	165	93.0	140	77.5	116
	28	157	237	134	202	113	169	102	153	86.5	130	72.1	108
	29	148	222	125	188	105	157	95.3	143	80.7	121	67.2	101
	30	138	208	117	176	98.1	147	89.0	134	75.4	113	62.8	94.2
	32	122	183	103	154	86.2	129	78.2	117	66.2	99.4	55.2	82.8
	34	108	162	91.1	137	76.4	115	69.3	104	58.7	88.0	48.9	73.3
	36	96.2	145	81.3	122	68.1	102	61.8	92.7	52.3	78.5	43.6	65.4
	38	86.3	130	72.9	109	61.1	91.7	55.5	83.2	47.0	70.5	39.1	58.7
	40	77.9	117	65.8	98.7	55.2	82.8	50.1	75.1	42.4	63.6	35.3	53.0
Properties													
M_n/Ω_b	$\phi_b M_n$ kip-ft	85.4	128	71.7	108	56.9	85.5	50.3	75.6	40.8	61.3	31.9	47.9
$P_e(KL)^2/10^4$	kip-in.^{2}	3930		3460		2900		2630		2230		1860	

ASD	LRFD
Ω_c = 2.00	ϕ_c = 0.75

Note: Dashed line indicates the KL beyond which bare steel strength controls.

5

COMPOSITE
HSS7.625-
HSS7.500

Table 4-18 (continued)
Available Strength in Axial Compression, kips
Concrete Filled Round HSS

F_y = 42 ksi
f'_c = 5 ksi

Shape		HSS7.625×				HSS7.500×							
		0.375		0.328		0.500		0.375		0.312		0.250	
t_{design}, in.		0.349		0.305		0.465		0.349		0.291		0.233	
Steel, lb/ft		29.1		25.6		37.4		28.6		24.0		19.4	
Design		P_n/Ω_c	$\phi_c P_n$	P_n/Ω_c	$\phi_c P_n$	P_n/Ω_c	$\phi_c P_n$	P_n/Ω_c	$\phi_c P_n$	P_n/Ω_c	$\phi_c P_n$	P_n/Ω_c	$\phi_c P_n$
		ASD	LRFD	ASD	LRFD	ASD	LRFD	ASD	LRFD	ASD	LRFD	ASD	LRFD
Effective length, KL (ft)	0	257	386	239	359	297	445	251	376	228	341	204	306
	6	242	364	225	338	279	419	236	354	214	321	191	287
	7	237	356	221	331	273	410	231	347	209	314	187	281
	8	232	348	215	323	267	400	225	338	204	306	182	273
	9	225	338	209	314	259	389	219	329	198	298	177	265
	10	219	328	203	304	251	377	212	318	192	288	171	257
	11	211	317	196	294	243	364	205	307	185	278	165	247
	12	203	305	189	283	233	350	197	296	178	267	158	237
	13	195	293	181	272	224	336	189	283	171	256	152	227
	14	187	280	173	260	214	321	181	271	163	245	144	217
	15	178	267	165	248	204	306	172	258	155	233	137	206
	16	170	254	157	236	194	291	163	245	147	221	130	195
	17	161	241	149	223	183	275	154	232	139	209	123	184
	18	152	228	141	211	173	259	146	218	131	197	115	173
	19	143	214	132	199	162	244	137	205	123	185	108	162
	20	134	201	124	186	152	229	128	192	115	173	101	151
	21	126	188	116	174	142	213	120	179	108	162	93.9	141
	22	117	176	108	162	132	199	111	167	100	150	87.0	131
	23	109	163	101	151	123	184	103	155	92.8	139	80.4	121
	24	101	151	93.1	140	114	171	95.2	143	85.5	128	73.8	111
	25	92.9	139	85.8	129	106	160	87.8	132	78.8	118	68.1	102
	26	85.9	129	79.3	119	98.6	148	81.1	122	72.8	109	62.9	94.4
	27	79.6	119	73.5	110	91.4	137	75.2	113	67.5	101	58.3	87.5
	28	74.0	111	68.4	103	85.0	128	70.0	105	62.8	94.2	54.3	81.4
	29	69.0	104	63.7	95.6	79.3	119	65.2	97.8	58.6	87.8	50.6	75.9
	30	64.5	96.7	59.6	89.3	74.1	111	60.9	91.4	54.7	82.1	47.3	70.9
	32	56.7	85.0	52.3	78.5	65.1	97.8	53.6	80.3	48.1	72.1	41.5	62.3
	34	50.2	75.3	46.4	69.6	57.7	86.7	47.4	71.2	42.6	63.9	36.8	55.2
	36	44.8	67.2	41.4	62.0	51.4	77.3	42.3	63.5	38.0	57.0	32.8	49.2
	38	40.2	60.3	37.1	55.7	46.2	69.4	38.0	57.0	34.1	51.2	29.5	44.2
	40	36.3	54.4	33.5	50.3	41.7	62.6	34.3	51.4	30.8	46.2	26.6	39.9
Properties													
M_n/Ω_b	$\phi_b M_n$ kip-ft	43.5	65.3	39.0	58.5	52.7	79.1	41.9	63.0	36.2	54.3	30.1	45.3
$P_e(KL)^2/10^4$	kip-in.^{2}	1910		1760		2150		1800		1620		1400	

ASD	LRFD
Ω_c = 2.00	ϕ_c = 0.75

Note: Dashed line indicates the KL beyond which bare steel strength controls.

Table 4-18 (continued)

Available Strength in Axial Compression, kips

Concrete Filled Round HSS

F_y = 42 ksi
f'_c = 5 ksi

5

COMPOSITE
HSS7.500-
HSS7

Shape		HSS7.500×		HSS7×							
		0.188		0.500		0.375		0.312		0.250	
t_{design}, in.		0.174		0.465		0.349		0.291		0.233	
Steel, lb/ft		14.7		34.7		26.6		22.3		18.0	
Design		P_n/Ω_c	$\phi_c P_n$	P_n/Ω_c	$\phi_c P_n$	P_n/Ω_c	$\phi_c P_n$	P_n/Ω_c	$\phi_c P_n$	P_n/Ω_c	$\phi_c P_n$
		ASD	LRFD	ASD	LRFD	ASD	LRFD	ASD	LRFD	ASD	LRFD
Effective length, KL (ft)	0	179	269	269	404	227	341	206	308	184	275
	6	168	252	251	377	212	318	192	288	171	256
	7	164	246	245	368	207	310	187	280	166	250
	8	159	239	238	357	201	301	182	272	162	242
	9	154	231	231	346	194	292	176	264	156	234
	10	149	223	222	334	187	281	169	254	150	226
	11	143	215	214	320	180	270	163	244	144	216
	12	137	206	204	307	172	258	156	233	138	207
	13	131	196	195	292	164	246	148	222	131	197
	14	124	187	185	278	156	234	141	211	124	186
	15	118	177	175	263	147	221	133	199	117	176
	16	111	167	165	247	139	208	125	188	110	165
	17	105	157	155	232	130	196	117	176	103	155
	18	97.9	147	145	217	122	183	110	165	96.1	144
	19	91.3	137	135	202	114	170	102	153	89.3	134
	20	84.9	127	125	188	105	158	94.7	142	82.6	124
	21	78.7	118	116	175	97.3	146	87.5	131	76.1	114
	22	72.6	109	108	163	89.6	134	80.5	121	69.7	105
	23	66.6	99.9	101	151	82.0	123	73.6	110	63.8	95.7
	24	61.1	91.7	93.1	140	75.3	113	67.6	101	58.6	87.9
	25	56.3	84.5	85.8	129	69.4	104	62.3	93.5	54.0	81.0
	26	52.1	78.1	79.4	119	64.2	96.3	57.6	86.4	49.9	74.9
	27	48.3	72.5	73.6	111	59.5	89.3	53.4	80.1	46.3	69.4
	28	44.9	67.4	68.4	103	55.3	83.0	49.7	74.5	43.1	64.6
	29	41.9	62.8	63.8	95.9	51.6	77.4	46.3	69.5	40.1	60.2
	30	39.1	58.7	59.6	89.6	48.2	72.3	43.3	64.9	37.5	56.3
	32	34.4	51.6	52.4	78.8	42.4	63.6	38.0	57.1	33.0	49.4
	34	30.5	45.7	46.4	69.8	37.5	56.3	33.7	50.5	29.2	43.8
	36	27.2	40.8	41.4	62.2	33.5	50.2	30.1	45.1	26.0	39.1
	38	24.4	36.6	37.2	55.8	30.0	45.1	27.0	40.5	23.4	35.1
	40	22.0	33.0								
Properties											
M_u/Ω_b	$\phi_b M_n$ kip-ft	23.6	35.5	45.2	67.9	36.0	54.1	31.1	46.7	25.9	39.0
$P_e(KL)^2/10^4$	kip-in.^{2}	1160		1700		1420		1280		1110	

ASD	LRFD
Ω_c = 2.00	ϕ_c = 0.75

Note: Heavy line indicates KL/r equal to or greater than 200.
Dashed line indicates the KL beyond which bare steel strength controls.

5

COMPOSITE
HSS7-
HSS6.875

Table 4-18 (continued)
Available Strength in Axial Compression, kips
Concrete Filled Round HSS

F_y = 42 ksi
f'_c = 5 ksi

Shape		HSS7×				HSS6.875×					
		0.188		0.125		0.500		0.375		0.312	
t_{design}, in.		0.174		0.116		0.465		0.349		0.291	
Steel, lb/ft		13.7		9.19		34.1		26.1		21.9	
Design		P_n/Ω_c ASD	$\phi_c P_n$ LRFD	P_n/Ω_c ASD	$\phi_c P_n$ LRFD	P_n/Ω_c ASD	$\phi_c P_n$ LRFD	P_n/Ω_c ASD	$\phi_c P_n$ LRFD	P_n/Ω_c ASD	$\phi_c P_n$ LRFD
Effective length, KL (ft)	0	161	241	138	207	262	394	222	332	200	300
	6	149	224	127	191	244	367	206	309	186	279
	7	145	218	123	185	238	357	201	301	182	272
	8	140	211	119	179	231	347	195	293	176	264
	9	135	203	114	172	224	335	189	283	170	255
	10	130	195	109	164	215	323	182	272	164	246
	11	124	187	104	156	206	310	174	261	157	236
	12	119	178	98.8	148	197	296	166	249	150	225
	13	112	169	93.3	140	188	282	158	237	143	214
	14	106	159	87.6	131	178	267	150	225	135	203
	15	99.9	150	81.9	123	168	252	142	212	128	191
	16	93.5	140	76.2	114	158	237	133	200	120	180
	17	87.2	131	70.6	106	148	222	125	187	112	168
	18	81.0	121	65.0	97.6	138	207	116	174	105	157
	19	74.9	112	59.7	89.5	128	192	108	162	97.0	146
	20	68.9	103	54.5	81.8	119	178	99.9	150	89.7	135
	21	63.2	94.8	49.5	74.2	110	166	92.1	138	82.7	124
	22	57.6	86.4	45.1	67.6	103	154	84.4	127	75.7	114
	23	52.7	79.0	41.2	61.9	94.9	143	77.2	116	69.2	104
	24	48.4	72.6	37.9	56.8	87.4	131	70.9	106	63.6	95.4
	25	44.6	66.9	34.9	52.4	80.6	121	65.3	98.0	58.6	87.9
	26	41.2	61.8	32.3	48.4	74.5	112	60.4	90.6	54.2	81.3
	27	38.2	57.3	29.9	44.9	69.1	104	56.0	84.0	50.2	75.4
	28	35.5	53.3	27.8	41.7	64.2	96.5	52.1	78.1	46.7	70.1
	29	33.1	49.7	25.9	38.9	59.9	90.0	48.6	72.8	43.6	65.3
	30	31.0	46.4	24.2	36.4	55.9	84.1	45.4	68.1	40.7	61.1
	32	27.2	40.8	21.3	32.0	49.2	73.9	39.9	59.8	35.8	53.7
	34	24.1	36.2	18.9	28.3	43.5	65.5	35.3	53.0	31.7	47.5
	36	21.5	32.3	16.8	25.2	38.8	58.4	31.5	47.3	28.3	42.4
	38	19.3	28.9	15.1	22.7			28.3	42.4	25.4	38.1
	40	17.4	26.1	13.6	20.5						
Properties											
M_n/Ω_b	$\phi_b M_n$ kip-ft	20.3	30.5	14.4	21.6	49.4	65.2	34.6	52.0	29.9	44.9
$P_e(KL)^2/10^4$	kip-in.^{2}	915		716		1600		1340		1200	

ASD	LRFD
Ω_c = 2.00	ϕ_c = 0.75

Note: Heavy line indicates KL/r equal to or greater than 200.
Dashed line indicates the KL beyond which bare steel strength controls.

F_y = 42 ksi
f'_c = 5 ksi

Table 4-18 (continued)
Available Strength in Axial Compression, kips
Concrete Filled Round HSS

5
COMPOSITE
HSS6.875-
HSS6.625

Shape		HSS6.875×				HSS6.625×					
		0.250		0.188		0.500		0.432		0.375	
t_{design}, in.		0.233		0.174		0.465		0.402		0.349	
Steel, lb/ft		17.7		13.4		32.7		28.6		25.1	
Design		P_n/Ω_c ASD	$\phi_c P_n$ LRFD	P_n/Ω_c ASD	$\phi_c P_n$ LRFD	P_n/Ω_c ASD	$\phi_c P_n$ LRFD	P_n/Ω_c ASD	$\phi_c P_n$ LRFD	P_n/Ω_c ASD	$\phi_c P_n$ LRFD
Effective length, KL (ft)	0	179	268	156	234	249	374	228	342	210	315
	6	166	249	145	217	231	347	211	317	194	292
	7	161	242	140	211	225	337	206	308	189	284
	8	157	235	136	204	218	326	199	299	183	275
	9	151	227	131	196	210	315	192	288	177	265
	10	145	218	126	189	201	302	184	277	170	254
	11	139	209	120	180	193	289	176	264	162	243
	12	133	199	114	171	183	275	168	252	154	231
	13	126	189	108	162	174	261	159	239	146	219
	14	119	179	102	153	164	246	150	225	138	207
	15	112	168	95.7	143	154	231	141	212	130	195
	16	105	158	89.4	134	144	217	132	198	121	182
	17	98.3	147	83.2	125	135	202	123	185	113	170
	18	91.5	137	77.1	116	125	187	114	171	105	157
	19	84.7	127	71.1	107	116	174	106	158	97.0	146
	20	78.2	117	65.3	97.9	108	162	97.2	146	89.2	134
	21	71.8	108	59.6	89.4	99.6	150	89.0	134	81.7	123
	22	65.6	98.3	54.3	81.5	92.0	138	81.6	123	74.4	112
	23	60.0	90.0	49.7	74.5	84.4	127	75.1	113	68.1	102
	24	55.1	82.6	45.6	68.5	77.5	116	68.9	104	62.6	93.8
	25	50.8	76.2	42.1	63.1	71.4	107	63.5	95.5	57.6	86.5
	26	46.9	70.4	38.9	58.3	66.0	99.3	58.7	88.3	53.3	80.0
	27	43.5	65.3	36.1	54.1	61.2	92.0	54.5	81.9	49.4	74.1
	28	40.5	60.7	33.5	50.3	56.9	85.6	50.6	76.1	46.0	68.9
	29	37.7	56.6	31.3	46.9	53.1	79.8	47.2	71.0	42.8	64.3
	30	35.3	52.9	29.2	43.8	49.6	74.6	44.1	66.3	40.0	60.1
	32	31.0	46.5	25.7	38.5	43.6	65.5	38.8	58.3	35.2	52.8
	34	27.5	41.2	22.7	34.1	38.6	58.0	34.4	51.6	31.2	46.8
	36	24.5	36.7	20.3	30.4	34.4	51.8	30.6	46.1	27.8	41.7
	38	22.0	33.0	18.2	27.3						
Properties											
M_n/Ω_b	$\phi_b M_n$ kip-ft	24.9	37.5	19.5	29.4	40.0	60.1	35.7	53.6	31.9	48.0
$P_e(KL)^2/10^4$	kip-in.^{2}	1040		863		1410		1290		1180	
ASD	LRFD	Note: Heavy line indicates KL/r equal to or greater than 200.									
Ω_c = 2.00	ϕ_c = 0.75	Dashed line indicates the KL beyond which bare steel strength controls.									

5

COMPOSITE
HSS6.625

Table 4-18 (continued)
Available Strength in Axial Compression, kips
Concrete Filled Round HSS

F_y = 42 ksi
f'_c = 5 ksi

Shape		HSS6.625×									
		0.312		0.280		0.250		0.188		0.125	
t_{design}, in.		0.291		0.260		0.233		0.174		0.116	
Steel, lb/ft		21.1		19.0		17.0		12.9		8.69	
Design		P_n/Ω_c ASD	$\phi_c P_n$ LRFD	P_n/Ω_c ASD	$\phi_c P_n$ LRFD	P_n/Ω_c ASD	$\phi_c P_n$ LRFD	P_n/Ω_c ASD	$\phi_c P_n$ LRFD	P_n/Ω_c ASD	$\phi_c P_n$ LRFD
Effective length, KL (ft)	0	190	285	179	268	169	254	148	221	126	189
	6	176	263	165	248	156	234	136	204	115	172
	7	171	256	161	241	152	228	132	198	111	167
	8	165	248	156	233	147	220	127	191	107	160
	9	159	239	150	225	141	212	122	183	102	154
	10	153	229	144	216	135	203	117	175	97.6	146
	11	146	219	137	206	129	194	111	167	92.5	139
	12	139	209	131	196	123	184	106	158	87.2	131
	13	132	198	124	186	116	174	99.5	149	81.8	123
	14	124	186	117	175	110	164	93.5	140	76.3	114
	15	117	175	110	164	103	154	87.3	131	70.9	106
	16	109	164	103	154	96.0	144	81.3	122	65.5	98.2
	17	102	153	95.4	143	89.2	134	75.2	113	60.2	90.2
	18	94.3	141	88.4	133	82.6	124	69.3	104	55.0	82.5
	19	87.1	131	81.6	122	76.1	114	63.6	95.4	50.0	75.0
	20	80.0	120	75.0	112	69.8	105	58.1	87.1	45.2	67.8
	21	73.2	110	68.5	103	63.6	95.4	52.7	79.0	41.0	61.5
	22	66.7	100	62.4	93.6	58.0	86.9	48.0	72.0	37.4	56.0
	23	61.0	91.5	57.1	85.7	53.0	79.5	43.9	65.9	34.2	51.3
	24	56.0	84.1	52.4	78.7	48.7	73.1	40.3	60.5	31.4	47.1
	25	51.6	77.5	48.3	72.5	44.9	67.3	37.2	55.8	28.9	43.4
	26	47.7	71.6	44.7	67.0	41.5	62.2	34.4	51.6	26.7	40.1
	27	44.3	66.4	41.4	62.2	38.5	57.7	31.9	47.8	24.8	37.2
	28	41.2	61.8	38.5	57.8	35.8	53.7	29.6	44.5	23.1	34.6
	29	38.4	57.6	35.9	53.9	33.4	50.0	27.6	41.4	21.5	32.2
	30	35.9	53.8	33.6	50.4	31.2	46.8	25.8	38.7	20.1	30.1
	32	31.5	47.3	29.5	44.3	27.4	41.1	22.7	34.0	17.7	26.5
	34	27.9	41.9	26.1	39.2	24.3	36.4	20.1	30.1	15.6	23.5
	36	24.9	37.4	23.3	35.0	21.6	32.5	17.9	26.9	13.9	20.9
	38							16.1	24.1	12.5	18.8
Properties											
M_{ld}/Ω_b	$\phi_b M_n$ kip-ft	27.6	41.4	25.2	37.8	23.0	34.6	18.0	27.1	12.8	19.2
$P_e(KL)^2/10^4$	kip-in.^{2}	1060		992		921		763		594	
ASD	LRFD	Note: Heavy line indicates KL/r equal to or greater than 200.									
$\Omega_c = 2.00$	$\phi_c = 0.75$										

F_y = 42 ksi
f'_c = 5 ksi

Table 4-18 (continued)
Available Strength in Axial Compression, kips
Concrete Filled Round HSS

5
COMPOSITE HSS6

Shape		HSS6×											
		0.500		0.375		0.312		0.280		0.250		0.188	
t_{design}, in.		0.465		0.349		0.291		0.260		0.233		0.174	
Steel, lb/ft		29.4		22.6		19.0		17.1		15.4		11.7	
Design		P_n/Ω_c	$\phi_c P_n$	P_n/Ω_c	$\phi_c P_n$	P_n/Ω_c	$\phi_c P_n$	P_n/Ω_c	$\phi_c P_n$	P_n/Ω_c	$\phi_c P_n$	P_n/Ω_c	$\phi_c P_n$
		ASD	LRFD	ASD	LRFD	ASD	LRFD	ASD	LRFD	ASD	LRFD	ASD	LRFD
Effective length, KL (ft)	0	218	327	183	274	164	247	155	232	146	219	126	190
	1	217	326	182	273	164	246	154	231	145	218	126	189
	2	216	323	181	271	163	244	153	229	144	216	125	187
	3	213	319	178	268	161	241	151	226	142	213	123	185
	4	209	313	175	263	158	236	148	222	140	210	121	181
	5	204	306	171	257	154	231	145	217	136	205	118	177
	6	198	297	166	249	150	224	141	211	132	199	114	171
	7	192	287	161	241	145	217	136	204	128	192	110	165
	8	184	276	155	232	139	209	130	196	123	185	106	159
	9	176	264	148	222	133	199	125	187	118	176	101	151
	10	168	252	141	211	126	190	119	178	112	168	95.6	143
	11	159	238	133	200	120	180	112	168	106	159	90.1	135
	12	150	224	125	188	113	169	106	159	99.5	149	84.5	127
	13	140	210	118	176	106	158	98.9	148	93.1	140	78.8	118
	14	131	196	110	164	98.4	148	92.1	138	86.7	130	73.1	110
	15	121	182	102	152	91.2	137	85.3	128	80.3	120	67.4	101
	16	113	170	93.7	141	84.1	126	78.6	118	74.0	111	61.8	92.8
	17	105	157	86.0	129	77.1	116	72.1	108	67.8	102	56.4	84.6
	18	96.5	145	78.5	118	70.3	106	65.7	98.6	61.8	92.7	51.1	76.7
	19	88.6	133	71.3	107	63.8	95.7	59.5	89.3	55.9	83.9	46.0	69.0
	20	81.0	122	64.4	96.8	57.6	86.4	53.7	80.6	50.5	75.7	41.5	62.3
	21	73.6	111	58.7	88.2	52.2	78.3	48.7	73.1	45.8	68.7	37.7	56.5
	22	67.0	101	53.5	80.4	47.6	71.4	44.4	66.6	41.7	62.6	34.3	51.5
	23	61.3	92.2	48.9	73.5	43.5	65.3	40.6	61.0	38.2	57.3	31.4	47.1
	24	56.3	84.6	44.9	67.5	40.0	60.0	37.3	56.0	35.1	52.6	28.8	43.3
	25	51.9	78.0	41.4	62.3	36.9	55.3	34.4	51.6	32.3	48.5	26.6	39.9
	26	48.0	72.1	38.3	57.6	34.1	51.1	31.8	47.7	29.9	44.8	24.6	36.9
	28	41.4	62.2	33.0	49.6	29.4	44.1	27.4	41.1	25.8	38.6	21.2	31.8
	30	36.0	54.2	28.8	43.2	25.6	38.4	23.9	35.8	22.4	33.7	18.5	27.7
	32	31.7	47.6	25.3	38.0	22.5	33.7	21.0	31.5	19.7	29.6	16.2	24.3
	34									17.5	26.2	14.4	21.6
Properties													
M_n/Ω_b	$\phi_b M_n$ kip-ft	32.0	48.1	25.6	38.5	22.2	33.3	20.3	30.4	18.5	27.8	14.6	21.9
$P_e(KL)^2/10^4$	kip-in.^{2}	1010		844		756		706		663		546	

ASD	LRFD
Ω_c = 2.00	ϕ_c = 0.75

Note: Heavy line indicates KL/r equal to or greater than 200.
Dashed line indicates the KL beyond which bare steel strength controls.

5

COMPOSITE HSS6-HSS5.563

Table 4-18 (continued)
Available Strength in Axial Compression, kips
Concrete Filled Round HSS

F_y = 42 ksi
f'_c = 5 ksi

Shape		HSS6×		HSS5.563×									
		0.125		0.500		0.375		0.258		0.188		0.134	
t_{design}, in.		0.116		0.465		0.349		0.240		0.174		0.124	
Steel, lb/ft		7.85		27.1		20.8		14.6		10.8		7.78	
Design		P_n/Ω_c ASD	$\phi_c P_n$ LRFD	P_n/Ω_c ASD	$\phi_c P_n$ LRFD	P_n/Ω_c ASD	$\phi_c P_n$ LRFD	P_n/Ω_c ASD	$\phi_c P_n$ LRFD	P_n/Ω_c ASD	$\phi_c P_n$ LRFD	P_n/Ω_c ASD	$\phi_c P_n$ LRFD
Effective length, KL (ft)	0	107	161	196	295	164	246	132	199	113	169	97.2	146
	1	107	160	196	294	164	246	132	198	112	168	96.9	145
	2	106	159	194	291	162	243	131	196	111	167	95.9	144
	3	104	156	191	287	160	240	129	193	109	164	94.3	141
	4	102	153	187	281	156	235	126	189	107	161	92.0	138
	5	99.1	149	182	273	152	228	123	184	104	156	89.2	134
	6	95.9	144	176	264	147	221	119	178	100	151	85.9	129
	7	92.2	138	169	254	142	212	114	171	96.3	144	82.2	123
	8	88.0	132	162	242	135	203	109	163	91.8	138	78.0	117
	9	83.6	125	153	230	129	193	103	155	86.9	130	73.6	110
	10	78.9	118	145	217	121	182	97.4	146	81.8	123	69.0	103
	11	74.0	111	136	204	114	171	91.3	137	76.5	115	64.2	96.2
	12	69.0	103	127	191	106	159	85.1	128	71.0	107	59.3	88.9
	13	63.9	95.9	119	178	98.4	148	78.8	118	65.6	98.4	54.4	81.6
	14	58.9	88.3	110	166	90.7	136	72.6	109	60.2	90.2	49.6	74.4
	15	53.9	80.8	102	153	83.1	125	66.4	99.6	54.8	82.2	44.9	67.3
	16	49.0	73.5	93.9	141	75.6	113	60.4	90.5	49.6	74.5	40.4	60.5
	17	44.3	66.5	85.9	129	68.4	103	54.5	81.8	44.7	67.0	36.0	53.9
	18	39.7	59.6	78.1	117	62.3	93.6	48.9	73.3	39.9	59.8	32.1	48.1
	19	35.7	53.5	70.6	106	56.6	85.1	43.9	65.8	35.8	53.7	28.8	43.2
	20	32.2	48.3	63.7	95.7	51.1	76.8	39.6	59.4	32.3	48.4	26.0	39.0
	21	29.2	43.8	57.8	86.8	46.3	69.6	35.9	53.9	29.3	43.9	23.6	35.3
	22	26.6	39.9	52.6	79.1	42.2	63.5	32.7	49.1	26.7	40.0	21.5	32.2
	23	24.3	36.5	48.2	72.4	38.6	58.1	29.9	44.9	24.4	36.6	19.6	29.5
	24	22.4	33.5	44.2	66.5	35.5	53.3	27.5	41.2	22.4	33.6	18.0	27.1
	25	20.6	30.9	40.8	61.3	32.7	49.1	25.3	38.0	20.7	31.0	16.6	24.9
	26	19.1	28.6	37.7	56.6	30.2	45.4	23.4	35.1	19.1	28.7	15.4	23.1
	28	16.4	24.6	32.5	48.8	26.1	39.2	20.2	30.3	16.5	24.7	13.3	19.9
	30	14.3	21.5	28.3	42.5	22.7	34.1	17.6	26.4	14.4	21.5	11.5	17.3
	32	12.6	18.9									10.1	15.2
	34	11.1	16.7										
Properties													
M_n/Ω_b; $\phi_b M_n$	kip-ft	10.3	15.6	27.0	40.6	21.7	32.6	16.1	24.2	12.4	18.6	9.31	14.0
$P_e(KL)^2/10^4$	kip-in.^{2}	423		777		653		520		424		341	

ASD	LRFD
Ω_c = 2.00	ϕ_c = 0.75

Note: Heavy line indicates KL/r equal to or greater than 200.
Dashed line indicates the KL beyond which bare steel strength controls.

Table 4-18 (continued)

F_y = 42 ksi
f'_c = 5 ksi

Available Strength in Axial Compression, kips

Concrete Filled Round HSS

5

COMPOSITE HSS5.500-HSS5

Shape		HSS5.500×						HSS5×					
		0.500		0.375		0.258		0.500		0.375		0.312	
t_{design}, in.		0.465		0.349		0.240		0.465		0.349		0.291	
Steel, lb/ft		26.7		20.6		14.5		24.1		18.5		15.6	
Design		P_n/Ω_c ASD	$\phi_c P_n$ LRFD	P_n/Ω_c ASD	$\phi_c P_n$ LRFD	P_n/Ω_c ASD	$\phi_c P_n$ LRFD	P_n/Ω_c ASD	$\phi_c P_n$ LRFD	P_n/Ω_c ASD	$\phi_c P_n$ LRFD	P_n/Ω_c ASD	$\phi_c P_n$ LRFD
Effective length, KL (ft)	0	194	290	162	242	130	196	170	255	142	212	127	190
	1	193	289	161	242	130	195	169	254	141	212	126	189
	2	191	287	160	239	129	193	167	251	140	209	125	187
	3	188	282	157	236	127	190	164	246	137	205	123	184
	4	184	276	154	231	124	186	160	240	133	200	119	179
	5	179	268	150	224	121	181	155	232	129	193	115	173
	6	173	259	145	217	116	175	148	222	124	186	111	166
	7	166	249	139	208	112	168	141	212	118	177	105	158
	8	158	238	133	199	107	160	134	201	111	167	99.7	150
	9	150	225	126	189	101	152	126	190	105	157	93.6	140
	10	142	212	119	178	95.2	143	118	178	97.4	146	87.2	131
	11	133	199	111	167	89.1	134	110	166	90.0	135	80.6	121
	12	124	187	103	155	82.9	124	102	153	82.6	124	73.9	111
	13	116	174	95.7	144	76.7	115	93.5	141	75.2	113	67.3	101
	14	108	162	88.0	132	70.4	106	85.3	128	68.0	102	60.9	91.3
	15	99.5	150	80.5	121	64.3	96.4	77.3	116	61.8	92.8	54.6	81.9
	16	91.3	137	73.1	110	58.3	87.5	69.5	104	55.8	83.9	48.6	72.9
	17	83.4	125	66.2	99.6	52.6	78.9	62.0	93.2	50.2	75.4	43.2	65.0
	18	75.7	114	60.4	90.8	47.0	70.5	55.3	83.1	44.7	67.2	38.6	58.1
	19	68.2	102	54.7	82.2	42.2	63.3	49.6	74.6	40.1	60.3	34.7	52.1
	20	61.5	92.5	49.4	74.2	38.1	57.1	44.8	67.3	36.2	54.5	31.3	47.0
	21	55.8	83.9	44.8	67.3	34.5	51.8	40.6	61.0	32.9	49.4	28.4	42.7
	22	50.9	76.4	40.8	61.3	31.5	47.2	37.0	55.6	29.9	45.0	25.9	38.9
	23	46.5	69.9	37.3	56.1	28.8	43.2	33.9	50.9	27.4	41.2	23.7	35.6
	24	42.7	64.2	34.3	51.5	26.4	39.7	31.1	46.7	25.2	37.8	21.7	32.7
	25	39.4	59.2	31.6	47.5	24.4	36.6	28.7	43.1	23.2	34.9	20.0	30.1
	26	36.4	54.7	29.2	43.9	22.5	33.8	26.5	39.8	21.4	32.2	18.5	27.8
	28	31.4	47.2	25.2	37.9	19.4	29.1						
	30			21.9	33.0	16.9	25.4						
Properties													
M_n/Ω_b	$\phi_b M_n$ kip-ft	26.3	39.6	21.1	31.8	15.7	23.6	21.2	31.9	17.1	25.7	14.8	22.3
$P_e(KL)^2/10^4$	kip-in.^{2}	747		629		500		539		456		408	

ASD	LRFD
Ω_c = 2.00	ϕ_c = 0.75

Note: Heavy line indicates KL/r equal to or greater than 200.
Dashed line indicates the KL beyond which bare steel strength controls.

5

COMPOSITE HSS5-HSS4.500

Table 4-18 (continued)
Available Strength in Axial Compression, kips
Concrete Filled Round HSS

F_y = 42 ksi
f'_c = 5 ksi

Shape		HSS5×								HSS4.500×			
		0.258		0.250		0.188		0.125		0.375		0.337	
t_{design}, in.		0.240		0.233		0.174		0.116		0.349		0.313	
Steel, lb/ft		13.1		12.7		9.67		6.51		16.5		15.0	
Design		P_n/Ω_c ASD	$\phi_c P_n$ LRFD	P_n/Ω_c ASD	$\phi_c P_n$ LRFD	P_n/Ω_c ASD	$\phi_c P_n$ LRFD	P_n/Ω_c ASD	$\phi_c P_n$ LRFD	P_n/Ω_c ASD	$\phi_c P_n$ LRFD	P_n/Ω_c ASD	$\phi_c P_n$ LRFD
Effective length, KL (ft)	0	113	170	112	167	95.8	144	79.8	120	123	184	115	172
	1	113	170	111	167	95.4	143	79.4	119	122	183	114	171
	2	112	168	110	165	94.3	141	78.5	118	120	180	112	169
	3	110	165	108	162	92.5	139	76.8	115	117	176	110	165
	4	107	160	105	158	90.0	135	74.6	112	114	171	106	159
	5	103	155	102	152	86.9	130	71.8	108	109	164	102	153
	6	99.1	149	97.4	146	83.3	125	68.6	103	104	155	96.9	145
	7	94.4	142	92.8	139	79.2	119	64.9	97.4	97.6	146	91.3	137
	8	89.2	134	87.7	132	74.7	112	60.9	91.4	91.0	137	85.1	128
	9	83.6	125	82.2	123	69.9	105	56.7	85.1	84.1	126	78.7	118
	10	77.9	117	76.5	115	64.9	97.4	52.4	78.5	77.0	116	72.1	108
	11	71.9	108	70.7	106	59.9	89.8	47.9	71.9	69.9	105	65.4	98.1
	12	66.0	98.9	64.8	97.2	54.7	82.1	43.5	65.3	63.5	95.4	58.8	88.1
	13	60.0	90.0	59.0	88.5	49.7	74.5	39.2	58.7	57.3	86.1	52.4	78.7
	14	54.2	81.3	53.3	79.9	44.7	67.1	34.9	52.4	51.3	77.1	47.0	70.6
	15	48.6	72.9	47.7	71.6	40.0	59.9	30.9	46.4	45.6	68.5	41.8	62.8
	16	43.2	64.8	42.4	63.6	35.3	53.0	27.2	40.7	40.1	60.3	36.8	55.3
	17	38.2	57.4	37.6	56.3	31.3	47.0	24.1	36.1	35.5	53.4	32.6	49.0
	18	34.1	51.2	33.5	50.3	27.9	41.9	21.5	32.2	31.7	47.6	29.1	43.7
	19	30.6	45.9	30.1	45.1	25.1	37.6	19.3	28.9	28.4	42.7	26.1	39.2
	20	27.6	41.5	27.1	40.7	22.6	33.9	17.4	26.1	25.7	38.6	23.5	35.4
	21	25.1	37.6	24.6	36.9	20.5	30.8	15.8	23.7	23.3	35.0	21.4	32.1
	22	22.8	34.3	22.4	33.6	18.7	28.0	14.4	21.6	21.2	31.9	19.5	29.3
	23	20.9	31.3	20.5	30.8	17.1	25.7	13.1	19.7	19.4	29.2	17.8	26.8
	24	19.2	28.8	18.8	28.3	15.7	23.6	12.1	18.1	17.8	26.8	16.4	24.6
	25	17.7	26.5	17.4	26.0	14.5	21.7	11.1	16.7				
	26	16.4	24.5	16.1	24.1	13.4	20.1	10.3	15.4				
	28	14.1	21.1	13.8	20.8	11.5	17.3	8.87	13.3				
Properties													
M_n/Ω_b	$\phi_b M_n$ kip-ft	12.7	19.1	12.4	18.7	9.80	14.7	6.99	10.5	13.5	20.3	12.4	18.7
$P_e(KL)^2/10^4$	kip-in.^{2}	363		356		297		228		318		298	

ASD: Ω_c = 2.00 LRFD: ϕ_c = 0.75

Note: Heavy line indicates KL/r equal to or greater than 200.
Dashed line indicates the KL beyond which bare steel strength controls.

F_y = 42 ksi
f'_c = 5 ksi

Table 4-18 (continued)
Available Strength in Axial Compression, kips
Concrete Filled Round HSS

5
COMPOSITE
HSS4.500-
HSS4

Shape		HSS4.500×						HSS4×			
		0.237		0.188		0.125		0.313		0.250	
t_{design}, in.		0.220		0.174		0.116		0.291		0.233	
Steel, lb/ft		10.8		8.67		5.85		12.3		10.0	
Design		P_n/Ω_c ASD	$\phi_c P_n$ LRFD	P_n/Ω_c ASD	$\phi_c P_n$ LRFD	P_n/Ω_c ASD	$\phi_c P_n$ LRFD	P_n/Ω_c ASD	$\phi_c P_n$ LRFD	P_n/Ω_c ASD	$\phi_c P_n$ LRFD
Effective length, KL (ft)	0	92.9	139	81.7	123	67.6	101	93.0	139	81.3	122
	1	92.5	139	81.3	122	67.2	101	92.4	139	80.8	121
	2	91.2	137	80.2	120	66.2	99.3	90.8	136	79.4	119
	3	89.1	134	78.3	117	64.5	96.8	88.2	132	77.1	116
	4	86.2	129	75.8	114	62.3	93.4	84.7	127	74.0	111
	5	82.7	124	72.6	109	59.5	89.3	80.3	120	70.2	105
	6	78.6	118	69.0	103	56.3	84.4	75.3	113	65.8	98.7
	7	74.0	111	64.9	97.3	52.7	79.0	69.8	105	61.0	91.4
	8	69.0	103	60.4	90.7	48.8	73.2	63.9	95.9	55.8	83.8
	9	63.7	95.6	55.8	83.7	44.8	67.1	57.8	86.8	50.5	75.8
	10	58.3	87.5	51.0	76.5	40.6	61.0	51.7	77.6	45.2	67.8
	11	52.9	79.3	46.2	69.3	36.5	54.8	46.1	69.3	40.0	60.0
	12	47.5	71.3	41.5	62.2	32.5	48.7	41.0	61.7	34.9	52.4
	13	42.3	63.5	36.8	55.3	28.6	42.9	36.2	54.3	30.1	45.2
	14	37.3	56.0	32.4	48.7	24.9	37.3	31.5	47.3	26.0	39.1
	15	32.6	48.8	28.3	42.4	21.7	32.5	27.4	41.2	22.6	34.0
	16	28.6	42.9	24.9	37.3	19.1	28.6	24.1	36.2	19.9	29.9
	17	25.4	38.0	22.0	33.0	16.9	25.3	21.3	32.1	17.6	26.5
	18	22.6	33.9	19.6	29.5	15.1	22.6	19.0	28.6	15.7	23.6
	19	20.3	30.4	17.6	26.4	13.5	20.3	17.1	25.7	14.1	21.2
	20	18.3	27.5	15.9	23.9	12.2	18.3	15.4	23.2	12.7	19.1
	21	16.6	24.9	14.4	21.6	11.1	16.6	14.0	21.0	11.6	17.4
	22	15.1	22.7	13.1	19.7	10.1	15.1	12.7	19.1	10.5	15.8
	23	13.8	20.8	12.0	18.0	9.22	13.8				
	24	12.7	19.1	11.0	16.6	8.47	12.7				
	25	11.7	17.6	10.2	15.3	7.81	11.7				
Properties											
M_n/Ω_b	$\phi_b M_n$ kip-ft	9.42	14.2	7.79	11.7	5.57	8.37	9.04	13.6	7.61	11.4
$P_e(KL)^2/10^4$	kip-in.^{2}	241		209		160		191		167	

ASD	LRFD
$\Omega_c = 2.00$	$\phi_c = 0.75$

Note: Heavy line indicates KL/r equal to or greater than 200.
Dashed line indicates the KL beyond which bare steel strength controls.

5

COMPOSITE HSS4

Table 4-18 (continued)

Available Strength in Axial Compression, kips

Concrete Filled Round HSS

F_y = 42 ksi

f'_c = 5 ksi

Shape		HSS4×									
		0.237		0.226		0.220		0.188		0.125	
t_{design}, in.		0.220		0.210		0.205		0.174		0.116	
Steel, lb/ft		9.53		9.12		8.89		7.66		5.18	
Design		P_n/Ω_c	$\phi_c P_n$	P_n/Ω_c	$\phi_c P_n$	P_n/Ω_c	$\phi_c P_n$	P_n/Ω_c	$\phi_c P_n$	P_n/Ω_c	$\phi_c P_n$
		ASD	LRFD	ASD	LRFD	ASD	LRFD	ASD	LRFD	ASD	LRFD
Effective length, KL (ft)	0	78.5	118	76.4	115	75.3	113	68.8	103	56.3	84.4
	1	78.0	117	76.0	114	74.8	112	68.4	103	55.9	83.9
	2	76.6	115	74.6	112	73.5	110	67.2	101	54.9	82.3
	3	74.4	112	72.5	109	71.4	107	65.2	97.8	53.2	79.8
	4	71.4	107	69.5	104	68.5	103	62.5	93.8	50.9	76.4
	5	67.8	102	66.0	98.9	65.0	97.5	59.3	88.9	48.1	72.2
	6	63.5	95.3	61.8	92.8	60.9	91.4	55.6	83.3	44.9	67.3
	7	58.9	88.3	57.3	85.9	56.5	84.7	51.4	77.2	41.4	62.0
	8	53.9	80.9	52.5	78.7	51.7	77.5	47.1	70.6	37.6	56.5
	9	48.8	73.2	47.5	71.2	46.8	70.2	42.6	63.8	33.8	50.7
	10	43.6	65.5	42.5	63.7	41.8	62.8	38.0	57.0	30.0	45.0
	11	38.6	57.9	37.5	56.3	37.0	55.5	33.6	50.4	26.3	39.5
	12	33.7	50.6	32.8	49.2	32.3	48.5	29.3	43.9	22.8	34.1
	13	29.1	43.6	28.2	42.4	27.8	41.8	25.2	37.8	19.4	29.2
	14	25.1	37.6	24.4	36.5	24.0	36.0	21.7	32.6	16.8	25.1
	15	21.8	32.7	21.2	31.8	20.9	31.4	18.9	28.4	14.6	21.9
	16	19.2	28.8	18.6	28.0	18.4	27.6	16.6	25.0	12.8	19.3
	17	17.0	25.5	16.5	24.8	16.3	24.4	14.7	22.1	11.4	17.1
	18	15.2	22.7	14.7	22.1	14.5	21.8	13.1	19.7	10.1	15.2
	19	13.6	20.4	13.2	19.8	13.0	19.5	11.8	17.7	9.10	13.7
	20	12.3	18.4	11.9	17.9	11.8	17.6	10.7	16.0	8.22	12.3
	21	11.1	16.7	10.8	16.2	10.7	16.0	9.66	14.5	7.45	11.2
	22	10.1	15.2	9.86	14.8	9.72	14.6	8.80	13.2	6.79	10.2
Properties											
M_n/Ω_b	$\phi_b M_n$ kip-ft	7.27	10.9	7.00	10.5	6.87	10.3	6.02	9.05	4.31	6.48
$P_e(KL)^2/10^4$	kip-in.^{2}	161		157		154		140		108	

ASD	LRFD
$\Omega_c = 2.00$	$\phi_c = 0.75$

Note: Heavy line indicates KL/r equal to or greater than 200.
Dashed line indicates the KL beyond which bare steel strength controls.

Table 4-19
Available Strength in Axial Compression, kips
Concrete Filled Pipe

F_y = 35 ksi
f'_c = 4 ksi

4

COMPOSITE
PIPE 12-PIPE 8

Shape		Pipe 12				Pipe 10				Pipe 8			
		XS		Std		XS		Std		XXS		XS	
t_{design}, in.		0.465		0.349		0.465		0.340		0.816		0.465	
Steel, lb/ft		65.5		49.6		54.8		40.5		72.5		43.4	
Design		P_n/Ω_c	$\phi_c P_n$	P_n/Ω_c	$\phi_c P_n$	P_n/Ω_c	$\phi_c P_n$	P_n/Ω_c	$\phi_c P_n$	P_n/Ω_c	$\phi_c P_n$	P_n/Ω_c	$\phi_c P_n$
		ASD	LRFD	ASD	LRFD	ASD	LRFD	ASD	LRFD	ASD	LRFD	ASD	LRFD
Effective length, KL (ft)	0	517	776	458	687	410	614	353	530	423	635	297	445
	6	508	763	450	674	400	599	344	516	407	611	286	429
	7	505	758	446	670	396	594	341	512	402	602	282	423
	8	501	752	443	664	392	588	337	506	395	593	277	416
	9	497	746	439	659	387	581	333	500	388	583	273	409
	10	493	739	435	652	382	573	329	493	381	573	267	401
	11	487	731	430	645	377	565	324	485	373	561	261	392
	12	482	723	425	637	371	556	318	477	365	549	255	383
	13	476	714	419	629	364	547	312	469	357	536	248	373
	14	470	705	413	620	358	537	306	459	348	523	241	362
	15	463	695	407	610	351	526	300	450	338	508	234	351
	16	456	684	400	600	343	515	293	440	328	494	227	340
	17	449	673	393	590	335	503	286	429	318	478	219	328
	18	441	661	386	579	327	491	279	418	308	463	211	316
	19	433	649	379	568	319	479	272	407	297	447	203	304
	20	425	637	371	556	311	466	264	396	286	430	195	292
	21	416	624	363	544	302	453	256	384	275	414	187	280
	22	407	611	355	532	293	440	248	372	264	397	178	267
	23	399	598	346	520	284	426	240	360	253	380	170	255
	24	389	584	338	507	275	413	232	348	242	364	162	243
	25	380	570	329	494	266	399	224	336	231	347	154	231
	26	371	556	321	481	257	385	216	324	220	331	146	218
	27	361	542	312	468	247	371	208	311	209	314	138	207
	28	351	527	303	454	238	357	199	299	198	298	130	195
	29	342	512	294	441	229	343	191	287	188	283	122	184
	30	332	498	285	427	220	330	183	275	178	267	115	172
	32	312	468	267	400	202	303	167	251	158	237	101	152
	34	292	439	249	373	184	276	152	228	140	210	89.7	135
	36	273	409	231	346	167	251	137	206	124	187	80.0	120
	38	254	380	214	320	151	226	123	184	112	168	71.8	108
	40	235	352	197	295	136	204	111	166	101	152	64.8	97.5
Properties													
M_n/Ω_b	$\phi_b M_n$ kip-ft	141	213	111	168	97.6	147	75.5	113	92.0	138	59.7	89.7
$P_e(KL)^2/10^4$	kip-in.^{2}	12600		10400		7140		5830		4770		3400	

ASD	LRFD
Ω_c = 2.00	ϕ_c = 0.75

Note: Dashed line indicates the KL beyond which bare steel strength controls.

4

COMPOSITE
PIPE 8-PIPE 5

Table 4-19 (continued)
Available Strength in Axial Compression, kips
Concrete Filled Pipe

F_y = 35 ksi
f'_c = 4 ksi

Shape		Pipe 8		Pipe 6						Pipe 5	
		Std		XXS		XS		Std		XXS	
t_{design}, in.		0.300		0.805		0.403		0.261		0.699	
Steel, lb/ft		28.6		53.2		28.6		19.0		38.6	
Design		P_n/Ω_c	$\phi_c P_n$	P_n/Ω_c	$\phi_c P_n$	P_n/Ω_c	$\phi_c P_n$	P_n/Ω_c	$\phi_c P_n$	P_n/Ω_c	$\phi_c P_n$
		ASD	LRFD	ASD	LRFD	ASD	LRFD	ASD	LRFD	ASD	LRFD
Effective length, KL (ft)	0	234	350	308	463	188	282	147	220	224	337
	6	225	337	290	436	176	264	137	206	205	309
	7	221	332	283	426	172	258	134	201	199	299
	8	218	327	276	415	168	251	131	196	192	288
	9	214	321	268	403	163	244	127	190	184	277
	10	209	314	260	391	157	236	122	183	176	264
	11	204	307	251	377	151	227	118	177	167	251
	12	199	299	241	362	145	218	113	169	158	237
	13	194	291	231	347	139	208	108	162	149	223
	14	188	282	221	332	132	199	103	154	139	209
	15	182	274	210	316	126	189	97.4	146	130	195
	16	176	264	199	299	119	179	92.0	138	120	181
	17	170	255	188	283	112	168	86.6	130	111	167
	18	164	245	177	267	105	158	81.3	122	102	153
	19	157	236	167	250	98.7	148	76.0	114	93.1	140
	20	150	226	156	234	92.1	138	70.8	106	84.5	127
	21	144	216	145	218	85.6	128	65.7	98.5	76.7	115
	22	137	206	135	203	79.3	119	60.7	91.1	69.9	105
	23	131	196	125	188	73.3	110	55.9	83.8	63.9	96.1
	24	124	186	115	173	68.3	103	51.3	77.0	58.7	88.2
	25	117	176	106	160	63.3	95.1	47.3	70.9	54.1	81.3
	26	111	167	98.2	148	58.5	88.0	43.7	65.6	50.0	75.2
	27	105	157	91.1	137	54.3	81.6	40.5	60.8	46.4	69.7
	28	98.6	148	84.7	127	50.5	75.8	37.7	56.5	43.1	64.8
	29	92.6	139	78.9	119	47.0	70.7	35.1	52.7	40.2	60.4
	30	86.6	130	73.8	111	44.0	66.1	32.8	49.3		
	32	76.1	114	64.8	97.4	38.6	58.1	28.9	43.3		
	34	67.4	101	57.4	86.3	34.2	51.4	25.6	38.3		
	36	60.2	90.2			30.5	45.9	22.8	34.2		
	38	54.0	81.0								
	40	48.7	73.1								
Properties											
M_n/Ω_b	$\phi_b M_n$ kip-ft	41.8	62.8	49.8	74.8	29.8	44.7	21.0	31.5	30.1	45.2
$P_e(KL)^2/10^4$	kip-in.^{2}	2560		1910		1270		970		967	

ASD	LRFD
Ω_c = 2.00	ϕ_c = 0.75

Note: Heavy line indicates KL/r equal to or greater than 200.
Dashed line indicates the KL beyond which bare steel strength controls.

Table 4-19 (continued)

F_y = 35 ksi
f'_c = 4 ksi

Available Strength in Axial Compression, kips

Concrete Filled Pipe

4

COMPOSITE
PIPE 5-PIPE 4

Shape		Pipe 5				Pipe 4					
		XS		Std		XXS		XS		Std	
t_{design}, in.		0.349		0.241		0.628		0.315		0.221	
Steel, lb/ft		20.8		14.6		27.6		15.0		10.8	
Design		P_n/Ω_c	$\phi_c P_n$	P_n/Ω_c	$\phi_c P_n$	P_n/Ω_c	$\phi_c P_n$	P_n/Ω_c	$\phi_c P_n$	P_n/Ω_c	$\phi_c P_n$
		ASD	LRFD	ASD	LRFD	ASD	LRFD	ASD	LRFD	ASD	LRFD
Effective length, KL (ft)	0	136	203	109	163	161	241	94.8	142	76.4	115
	6	124	186	99.1	149	140	210	82.5	124	66.4	99.6
	7	120	179	95.8	144	139	200	78.4	118	63.1	94.7
	8	115	173	92.2	138	126	189	74.0	111	59.5	89.3
	9	110	165	88.3	132	118	177	69.3	104	55.7	83.6
	10	105	158	84.1	126	110	165	64.4	96.6	51.8	77.6
	11	99.7	149	79.7	120	101	152	59.3	89.0	47.7	71.5
	12	94.0	141	75.1	113	92.7	139	54.3	81.4	43.6	65.4
	13	88.2	132	70.4	106	84.3	127	49.3	73.9	39.6	59.3
	14	82.4	124	65.7	98.6	76.0	114	44.9	67.4	35.6	53.4
	15	76.5	115	61.0	91.5	68.1	102	40.7	61.2	31.8	47.7
	16	70.7	106	56.3	84.5	60.3	90.7	36.7	55.1	28.1	42.2
	17	65.0	97.6	51.8	77.7	53.5	80.3	32.8	49.2	24.9	37.4
	18	59.8	89.8	47.3	71.0	47.7	71.7	29.2	43.9	22.2	33.3
	19	55.2	83.0	43.0	64.6	42.8	64.3	26.2	39.4	19.9	29.9
	20	50.7	76.3	38.9	58.3	38.6	58.0	23.7	35.6	18.0	27.0
	21	46.4	69.8	35.3	52.9	35.0	52.6	21.5	32.3	16.3	24.5
	22	42.3	63.6	32.1	48.2	31.9	48.0	19.6	29.4	14.9	22.3
	23	38.7	58.2	29.4	44.1	29.2	43.9	17.9	26.9	13.6	20.4
	24	35.5	53.4	27.0	40.5			16.4	24.7	12.5	18.8
	25	32.8	49.2	24.9	37.3					11.5	17.3
	26	30.3	45.5	23.0	34.5						
	27	28.1	42.2	21.3	32.0						
	28	26.1	39.2	19.8	29.7						
	29	24.3	36.6	18.5	27.7						
	30	22.7	34.2	17.3	25.9						
Properties											
M_y/Ω_b	$\phi_b M_n$ kip-ft	18.0	27.1	13.4	20.1	17.1	25.7	10.4	15.6	7.85	11.8
$P_e(KL)^2/10^4$	kip-in.^{2}	643		511		438		295		236	
ASD	LRFD	Note: Heavy line indicates KL/r equal to or greater than 200.									
Ω_c = 2.00	ϕ_c = 0.75	Dashed line indicates the KL beyond which bare steel strength controls.									

4

COMPOSITE
PIPE 3½-PIPE 3

Table 4-19 (continued)
Available Strength in Axial Compression, kips
Concrete Filled Pipe

F_y = 35 ksi
f'_c = 4 ksi

Shape		Pipe 3½				Pipe 3					
		XS		Std		XXS		XS		Std	
t_{design}, in.		0.296		0.211		0.559		0.280		0.201	
Steel, lb/ft		12.5		9.12		18.6		10.3		7.58	
Design		P_n/Ω_c ASD	$\phi_c P_n$ LRFD	P_n/Ω_c ASD	$\phi_c P_n$ LRFD	P_n/Ω_c ASD	$\phi_c P_n$ LRFD	P_n/Ω_c ASD	$\phi_c P_n$ LRFD	P_n/Ω_c ASD	$\phi_c P_n$ LRFD
Effective length, KL (ft)	0	77.4	116	62.9	94.3	109	163	62.4	93.6	50.6	75.9
	6	64.9	97.3	52.7	79.0	85.6	129	49.6	74.3	40.2	60.3
	7	60.9	91.3	49.4	74.1	78.6	118	45.6	68.4	37.0	55.5
	8	56.6	84.9	45.9	68.9	71.2	107	41.4	62.1	33.6	50.4
	9	52.1	78.1	42.2	63.4	63.7	95.7	37.5	56.3	30.2	45.3
	10	47.4	71.1	38.5	57.7	56.2	84.5	33.6	50.6	26.7	40.1
	11	42.8	64.3	34.7	52.1	49.0	73.6	29.9	44.9	23.4	35.1
	12	38.7	58.2	31.0	46.5	42.1	63.3	26.2	39.4	20.2	30.3
	13	34.8	52.3	27.4	41.1	35.9	53.9	22.7	34.1	17.5	26.2
	14	31.0	46.6	24.0	36.0	30.9	46.5	19.6	29.4	15.1	22.7
	15	27.3	41.0	20.9	31.3	26.9	40.5	17.1	25.6	13.1	19.8
	16	24.0	36.1	18.4	27.5	23.7	35.6	15.0	22.5	11.6	17.4
	17	21.3	32.0	16.3	24.4	21.0	31.5	13.3	20.0	10.2	15.4
	18	19.0	28.5	14.5	21.8			11.8	17.8	9.13	13.7
	19	17.0	25.6	13.0	19.5			10.6	16.0	8.19	12.3
	20	15.4	23.1	11.7	17.6						
	21	13.9	20.9	10.7	16.0						
	22			9.71	14.6						
Properties											
M_n/Ω_b, $\phi_b M_n$	kip-ft	7.62	11.4	5.84	8.78	8.74	13.1	5.42	8.14	4.19	6.29
$P_e(KL)^2/10^4$	kip-in.^{2}	191		154		171		117		95.6	

ASD	LRFD
Ω_c = 2.00	ϕ_c = 0.75

Note: Heavy line indicates KL/r equal to or greater than 200.
Dashed line indicates the KL beyond which bare steel strength controls.

Table 4-20
Available Strength in Axial Compression, kips
Concrete Filled Pipe

F_y = 35 ksi
f'_c = 5 ksi

5

COMPOSITE PIPE 12-PIPE 8

Shape		Pipe 12				Pipe 10				Pipe 8			
		XS		Std		XS		Std		XXS		XS	
t_{design}, in.		0.465		0.349		0.465		0.340		0.816		0.465	
Steel, lb/ft		65.5		49.6		54.8		40.5		72.5		43.4	
Design		P_n/Ω_c ASD	$\phi_c P_n$ LRFD	P_n/Ω_c ASD	$\phi_c P_n$ LRFD	P_n/Ω_c ASD	$\phi_c P_n$ LRFD	P_n/Ω_c ASD	$\phi_c P_n$ LRFD	P_n/Ω_c ASD	$\phi_c P_n$ LRFD	P_n/Ω_c ASD	$\phi_c P_n$ LRFD
Effective length, KL (ft)	0	570	855	513	769	446	669	392	587	441	662	319	478
	6	560	839	502	754	434	651	381	571	424	636	306	460
	7	556	834	499	748	430	645	377	565	418	627	302	453
	8	551	827	494	742	425	638	372	558	411	617	297	446
	9	546	820	490	734	420	630	367	551	404	605	291	437
	10	541	811	484	726	414	622	362	543	395	593	285	428
	11	535	802	479	718	408	612	356	534	386	579	279	418
	12	528	793	472	708	401	602	350	524	376	565	272	408
	13	521	782	466	698	394	591	343	514	366	549	264	396
	14	514	771	458	688	386	579	336	503	355	533	257	385
	15	506	759	451	676	378	567	328	492	344	516	248	373
	16	498	747	443	664	369	554	320	480	333	499	240	360
	17	489	734	435	652	361	541	312	468	321	481	231	347
	18	480	721	426	639	351	527	304	455	309	463	223	334
	19	471	707	417	626	342	513	295	442	297	447	214	320
	20	461	692	408	612	332	498	286	429	286	430	205	307
	21	451	677	398	598	322	484	277	415	275	414	195	293
	22	441	662	389	583	312	469	268	402	264	397	186	279
	23	431	646	379	568	302	453	258	388	253	380	177	266
	24	420	630	369	553	292	438	249	374	242	364	168	252
	25	410	614	359	538	282	422	240	360	231	347	159	239
	26	399	598	348	522	271	407	230	345	220	331	151	226
	27	388	581	338	507	261	391	221	331	209	314	142	213
	28	376	565	327	491	251	376	212	317	198	298	133	200
	29	365	548	317	475	240	360	202	303	188	283	125	188
	30	354	531	306	459	230	345	193	290	178	267	117	176
	32	332	497	285	428	210	315	175	263	158	237	103	154
	34	309	464	265	397	191	286	158	237	140	210	91.2	137
	36	287	431	244	366	172	258	141	212	124	187	81.3	122
	38	265	398	224	337	154	231	127	190	112	168	73.0	109
	40	244	367	205	308	139	209	114	172	101	152	65.9	98.8
Properties													
M_r/Ω_b $\phi_b M_n$ kip-ft		144	217	114	171	99.4	149	77.0	116	92.9	140	60.7	91.2
$P_e(KL)^2/10^4$ kip-in.^{2}		13000		10800		7310		6010		4820		3460	

ASD	LRFD
Ω_c = 2.00	ϕ_c = 0.75

Note: Dashed line indicates the KL beyond which bare steel strength controls.

5

COMPOSITE PIPE 8-PIPE 5

Table 4-20 (continued)
Available Strength in Axial Compression, kips
Concrete Filled Pipe

F_y = 35 ksi
f'_c = 5 ksi

Shape		Pipe 8		Pipe 6						Pipe 5	
		Std		XXS		XS		Std		XXS	
t_{design}, in.		0.300		0.895		0.403		0.261		0.699	
Steel, lb/ft		28.6		53.2		28.6		19.0		38.6	
Design		P_n/Ω_c ASD	$\phi_c P_n$ LRFD	P_n/Ω_c ASD	$\phi_c P_n$ LRFD	P_n/Ω_c ASD	$\phi_c P_n$ LRFD	P_n/Ω_c ASD	$\phi_c P_n$ LRFD	P_n/Ω_c ASD	$\phi_c P_n$ LRFD
Effective length, KL (ft)	0	258	386	308	463	200	301	161	241	224	337
	6	247	370	290	436	187	281	150	225	205	309
	7	243	365	283	426	183	274	146	219	199	299
	8	239	358	276	415	178	267	142	213	192	288
	9	234	351	268	403	172	258	137	206	184	277
	10	229	343	260	391	166	249	132	198	176	264
	11	223	335	251	377	160	240	127	190	167	251
	12	217	326	241	362	153	230	121	182	158	237
	13	211	317	231	347	146	219	116	173	149	223
	14	204	307	221	332	139	208	110	165	139	209
	15	198	296	210	316	132	197	104	156	130	195
	16	190	286	199	299	124	186	97.6	146	120	181
	17	183	275	188	283	117	175	91.6	137	111	167
	18	176	264	177	267	109	164	85.5	128	102	153
	19	168	252	167	250	102	153	79.6	119	93.1	140
	20	161	241	156	234	94.9	142	73.8	111	84.5	127
	21	153	230	145	218	87.9	132	68.1	102	76.7	115
	22	146	218	135	203	81.1	122	62.7	94.0	69.9	105
	23	138	207	125	188	74.4	112	57.3	86.0	63.9	96.1
	24	131	196	115	173	68.3	103	52.6	78.9	58.7	88.2
	25	123	185	106	160	63.3	95.1	48.5	72.7	54.1	81.3
	26	116	174	98.2	148	58.5	88.0	44.8	67.3	50.0	75.2
	27	109	164	91.1	137	54.3	81.6	41.6	62.4	46.4	69.7
	28	102	153	84.7	127	50.5	75.8	38.7	58.0	43.1	64.8
	29	95.3	143	78.9	119	47.0	70.7	36.0	54.1	40.2	60.4
	30	89.1	134	73.8	111	44.0	66.1	33.7	50.5		
	32	78.3	117	64.8	97.4	38.6	58.1	29.6	44.4		
	34	69.3	104	57.4	86.3	34.2	51.4	26.2	39.3		
	36	61.8	92.8			30.5	45.9	23.4	35.1		
	38	55.5	83.3								
	40	50.1	75.1								
Properties											
M_n/Ω_b | $\phi_b M_n$	kip-ft	42.6	64.1	50.2	75.4	30.2	45.4	21.4	32.2	30.3	45.5
$P_e(KL)^2/10^4$	kip-in.^{2}	2630		1930		1290		995		973	

ASD	LRFD
$\Omega_c = 2.00$	$\phi_c = 0.75$

Note: Heavy line indicates KL/r equal to or greater than 200.
Dashed line indicates the KL beyond which bare steel strength controls.

Table 4-20 (continued)

F_y = 35 ksi
f'_c = 5 ksi

Available Strength in Axial Compression, kips

Concrete Filled Pipe

5

COMPOSITE PIPE 5-PIPE 4

Shape		Pipe 5				Pipe 4					
		XS		Std		XXS		XS		Std	
t_{design}, in.		0.349		0.241		0.628		0.315		0.221	
Steel, lb/ft		20.8		14.6		27.6		15.0		10.8	
Design		P_n/Ω_c ASD	$\phi_c P_n$ LRFD	P_n/Ω_c ASD	$\phi_c P_n$ LRFD	P_n/Ω_c ASD	$\phi_c P_n$ LRFD	P_n/Ω_c ASD	$\phi_c P_n$ LRFD	P_n/Ω_c ASD	$\phi_c P_n$ LRFD
Effective length, KL (ft)	0	144	216	118	177	161	241	100	151	82.5	124
	6	131	197	107	161	140	210	86.8	130	71.2	107
	7	127	190	104	155	133	200	82.3	124	67.4	101
	8	122	183	99.4	149	126	189	77.5	116	63.4	95.1
	9	116	174	94.8	142	118	177	72.3	109	59.1	88.7
	10	111	166	90.1	135	110	165	67.0	100	54.7	82.0
	11	105	157	85.0	128	101	152	61.5	92.3	50.1	75.2
	12	98.4	148	79.9	120	92.7	139	56.1	84.1	45.6	68.4
	13	92.0	138	74.6	112	84.3	127	50.7	76.0	41.1	61.7
	14	85.6	128	69.3	104	76.0	114	45.4	68.2	36.8	55.2
	15	79.3	119	64.0	96.0	68.1	102	40.7	61.2	32.6	49.0
	16	73.0	109	58.8	88.2	60.3	90.7	36.7	55.1	28.7	43.1
	17	66.8	100	53.8	80.6	53.5	80.3	32.8	49.2	25.4	38.1
	18	60.9	91.3	48.9	73.3	47.7	71.7	29.2	43.9	22.7	34.0
	19	55.2	83.0	44.1	66.1	42.8	64.3	26.2	39.4	20.4	30.5
	20	50.7	76.3	39.8	59.7	38.6	58.0	23.7	35.6	18.4	27.6
	21	46.4	69.8	36.1	54.1	35.0	52.6	21.5	32.3	16.7	25.0
	22	42.3	63.6	32.9	49.3	31.9	48.0	19.6	29.4	15.2	22.8
	23	38.7	58.2	30.1	45.1	29.2	43.9	17.9	26.9	13.9	20.8
	24	35.5	53.4	27.6	41.4			16.4	24.7	12.8	19.1
	25	32.8	49.2	25.5	38.2					11.8	17.6
	26	30.3	45.5	23.5	35.3						
	27	28.1	42.2	21.8	32.7						
	28	26.1	39.2	20.3	30.4						
	29	24.3	36.6	18.9	28.4						
	30	22.7	34.2	17.7	26.5						
Properties											
M_p/Ω_b	$\phi_b M_p$ kip-ft	18.3	27.5	13.6	20.5	17.2	25.8	10.5	15.8	7.99	12.0
$P_e(KL)^2/10^4$	kip-in.^{2}	653		522		440		299		241	
ASD	LRFD	Note: Heavy line indicates KL/r equal to or greater than 200. Dashed line indicates the KL beyond which bare steel strength controls.									
Ω_c = 2.00	ϕ_c = 0.75										

5

COMPOSITE PIPE $3^1/_2$-PIPE 3

Table 4-20 (continued)
Available Strength in Axial Compression, kips
Concrete Filled Pipe

F_y = 35 ksi
f'_c = 5 ksi

Shape		Pipe $3^1/_2$				Pipe 3					
		XS		Std		XXS		XS		Std	
t_{design}, in.		0.296		0.211		0.559		0.280		0.201	
Steel, lb/ft		12.5		9.12		18.6		10.3		7.58	
Design		P_n/Ω_c ASD	$\phi_c P_n$ LRFD	P_n/Ω_c ASD	$\phi_c P_n$ LRFD	P_n/Ω_c ASD	$\phi_c P_n$ LRFD	P_n/Ω_c ASD	$\phi_c P_n$ LRFD	P_n/Ω_c ASD	$\phi_c P_n$ LRFD
Effective length, KL (ft)	0	81.7	123	67.7	101	108	163	65.7	98.5	54.2	81.2
	6	68.0	102	56.1	84.2	85.6	129	51.6	77.5	42.5	63.8
	7	63.6	95.5	52.5	78.7	78.6	118	47.3	71.0	39.0	58.5
	8	58.9	88.4	48.5	72.8	71.2	107	42.8	64.3	35.2	52.9
	9	54.0	81.1	44.5	66.7	63.7	95.7	38.2	57.4	31.4	47.2
	10	49.1	73.6	40.3	60.4	56.2	84.5	33.7	50.6	27.7	41.5
	11	44.1	66.1	36.1	54.2	49.0	73.6	29.9	44.9	24.0	36.1
	12	39.2	58.8	32.1	48.1	42.1	63.3	26.2	39.4	20.6	30.8
	13	34.8	52.3	28.2	42.2	35.9	53.9	22.7	34.1	17.5	26.3
	14	31.0	46.6	24.4	36.7	30.9	46.5	19.6	29.4	15.1	22.7
	15	27.3	41.0	21.3	31.9	26.9	40.5	17.1	25.6	13.2	19.8
	16	24.0	36.1	18.7	28.1	23.7	35.6	15.0	22.5	11.6	17.4
	17	21.3	32.0	16.6	24.9	21.0	31.5	13.3	20.0	10.2	15.4
	18	19.0	28.5	14.8	22.2			11.8	17.8	9.14	13.7
	19	17.0	25.6	13.3	19.9			10.6	16.0	8.20	12.3
	20	15.4	23.1	12.0	18.0						
	21	13.9	20.9	10.9	16.3						
	22			9.89	14.8						
Properties											
M_n/Ω_b	$\phi_b M_n$ kip-ft	7.72	11.6	5.94	8.93	8.79	13.2	5.48	8.24	4.25	6.39
$P_e(KL)^2/10^4$	kip-in.^{2}	193		157		171		119		97.3	
ASD	LRFD	Note: Heavy line indicates KL/r equal to or greater than 200.									
Ω_c = 2.00	ϕ_c = 0.75	Dashed line indicates the KL beyond which bare steel strength controls.									

Table 4-21
Stiffness Reduction Factor τ_b

ASD $\frac{P_a}{A_g}$	LRFD $\frac{P_u}{A_g}$	F_y, ksi									
		35		36		42		46		50	
		ASD	LRFD	ASD	LRFD	ASD	LRFD	ASD	LRFD	ASD	LRFD
45		–	–	–	–	–	–	–	0.0851	–	0.360
44		–	–	–	–	–	–	–	0.166	–	0.422
43		–	–	–	–	–	–	–	0.244	–	0.482
42		–	–	–	–	–	–	–	0.318	–	0.538
41		–	–	–	–	–	0.0930	–	0.388	–	0.590
40		–	–	–	–	–	0.181	–	0.454	–	0.640
39		–	–	–	–	–	0.265	–	0.516	–	0.686
38		–	–	–	–	–	0.345	–	0.575	–	0.730
37		–	–	–	–	–	0.420	–	0.629	–	0.770
36		–	–	–	–	–	0.490	–	0.681	–	0.806
35		–	–	–	0.108	–	0.556	–	0.728	–	0.840
34		–	0.111	–	0.210	–	0.617	–	0.771	–	0.870
33		–	0.216	–	0.306	–	0.673	–	0.811	–	0.898
32		–	0.313	–	0.395	–	0.726	–	0.847	–	0.922
31		–	0.405	–	0.478	–	0.773	–	0.879	0.0317	0.942
30		–	0.490	–	0.556	–	0.816	–	0.907	0.154	0.960
29		–	0.568	–	0.627	–	0.855	–	0.932	0.267	0.974
28		–	0.640	–	0.691	–	0.889	0.102	0.953	0.373	0.986
27		–	0.705	–	0.750	–	0.918	0.229	0.970	0.470	0.994
26		–	0.764	–	0.802	0.0377	0.943	0.346	0.983	0.559	0.998
25		–	0.816	–	0.849	0.181	0.964	0.454	0.992	0.640	1.00
24		–	0.862	–	0.889	0.313	0.980	0.552	0.998	0.713	
23		–	0.901	–	0.923	0.434	0.991	0.640	1.00	0.777	
22		–	0.934	0.0869	0.951	0.543	0.998	0.719		0.834	
21		0.154	0.960	0.249	0.972	0.640	1.00	0.788		0.882	
20		0.313	0.980	0.395	0.988	0.726		0.847		0.922	
19		0.457	0.993	0.525	0.997	0.800		0.896		0.953	
18		0.583	0.999	0.640	1.00	0.862		0.936		0.977	
17		0.693	1.00	0.739		0.913		0.967		0.992	
16		0.786		0.822		0.952		0.987		0.999	
15		0.862		0.889		0.980		0.998		1.00	
14		0.922		0.940		0.996		1.00			
13		0.964		0.976		1.00					
12		0.991		0.996							
11		1.00		1.00							
10											
9											
8											
7											
6											
5											

– Indicates the stiffness reduction parameter is not applicable because the required strength exceeds the available strength for $KL/r = 0$.

Table 4-22
Available Critical Stress for Compression Members

F_y = 35 ksi			F_y = 36 ksi			F_y = 42 ksi			F_y = 46 ksi			F_y = 50 ksi		
$\frac{KL}{r}$	F_{cr}/Ω_c ksi ASD	$\phi_c F_{cr}$ ksi LRFD	$\frac{KL}{r}$	F_{cr}/Ω_c ksi ASD	$\phi_c F_{cr}$ ksi LRFD	$\frac{KL}{r}$	F_{cr}/Ω_c ksi ASD	$\phi_c F_{cr}$ ksi LRFD	$\frac{KL}{r}$	F_{cr}/Ω_c ksi ASD	$\phi_c F_{cr}$ ksi LRFD	$\frac{KL}{r}$	F_{cr}/Ω_c ksi ASD	$\phi_c F_{cr}$ ksi LRFD
1	21.0	31.5	1	21.6	32.4	1	25.1	37.8	1	27.5	41.4	1	29.9	45.0
2	21.0	31.5	2	21.6	32.4	2	25.1	37.8	2	27.5	41.4	2	29.9	45.0
3	20.9	31.5	3	21.5	32.4	3	25.1	37.8	3	27.5	41.4	3	29.9	45.0
4	20.9	31.5	4	21.5	32.4	4	25.1	37.8	4	27.5	41.4	4	29.9	44.9
5	20.9	31.5	5	21.5	32.4	5	25.1	37.7	5	27.5	41.3	5	29.9	44.9
6	20.9	31.4	6	21.5	32.3	6	25.1	37.7	6	27.5	41.3	6	29.9	44.9
7	20.9	31.4	7	21.5	32.3	7	25.1	37.7	7	27.5	41.3	7	29.8	44.8
8	20.9	31.4	8	21.5	32.3	8	25.1	37.7	8	27.4	41.2	8	29.8	44.8
9	20.9	31.4	9	21.5	32.3	9	25.0	37.6	9	27.4	41.2	9	29.8	44.7
10	20.9	31.3	10	21.4	32.2	10	25.0	37.6	10	27.4	41.1	10	29.7	44.7
11	20.8	31.3	11	21.4	32.2	11	25.0	37.5	11	27.3	41.1	11	29.7	44.6
12	20.8	31.3	12	21.4	32.2	12	24.9	37.5	12	27.3	41.0	12	29.6	44.5
13	20.8	31.2	13	21.4	32.1	13	24.9	37.4	13	27.2	40.9	13	29.6	44.4
14	20.7	31.2	14	21.3	32.1	14	24.8	37.3	14	27.2	40.9	14	29.5	44.4
15	20.7	31.1	15	21.3	32.0	15	24.8	37.3	15	27.1	40.8	15	29.5	44.3
16	20.7	31.1	16	21.3	32.0	16	24.8	37.2	16	27.1	40.7	16	29.4	44.2
17	20.7	31.0	17	21.2	31.9	17	24.7	37.1	17	27.0	40.6	17	29.3	44.1
18	20.6	31.0	18	21.2	31.9	18	24.7	37.1	18	27.0	40.5	18	29.2	43.9
19	20.6	30.9	19	21.2	31.8	19	24.6	37.0	19	26.9	40.4	19	29.2	43.8
20	20.5	30.9	20	21.1	31.7	20	24.5	36.9	20	26.8	40.3	20	29.1	43.7
21	20.5	30.8	21	21.1	31.7	21	24.5	36.8	21	26.7	40.2	21	29.0	43.6
22	20.4	30.7	22	21.0	31.6	22	24.4	36.7	22	26.7	40.1	22	28.9	43.4
23	20.4	30.7	23	21.0	31.5	23	24.3	36.6	23	26.6	40.0	23	28.8	43.3
24	20.3	30.6	24	20.9	31.4	24	24.3	36.5	24	26.5	39.8	24	28.7	43.1
25	20.3	30.5	25	20.9	31.4	25	24.2	36.4	25	26.4	39.7	25	28.6	43.0
26	20.2	30.4	26	20.8	31.3	26	24.1	36.3	26	26.3	39.6	26	28.5	42.8
27	20.2	30.3	27	20.7	31.2	27	24.0	36.1	27	26.2	39.4	27	28.4	42.7
28	20.1	30.3	28	20.7	31.1	28	24.0	36.0	28	26.1	39.3	28	28.3	42.5
29	20.1	30.2	29	20.6	31.0	29	23.9	35.9	29	26.0	39.1	29	28.2	42.3
30	20.0	30.1	30	20.6	30.9	30	23.8	35.8	30	25.9	39.0	30	28.0	42.1
31	20.0	30.0	31	20.5	30.8	31	23.7	35.6	31	25.8	38.8	31	27.9	41.9
32	19.9	29.9	32	20.4	30.7	32	23.6	35.5	32	25.7	38.6	32	27.8	41.8
33	19.8	29.8	33	20.4	30.6	33	23.5	35.4	33	25.6	38.5	33	27.7	41.6
34	19.8	29.7	34	20.3	30.5	34	23.4	35.2	34	25.5	38.3	34	27.5	41.4
35	19.7	29.6	35	20.2	30.4	35	23.3	35.1	35	25.4	38.1	35	27.4	41.2
36	19.6	29.5	36	20.1	30.3	36	23.2	34.9	36	25.2	37.9	36	27.2	40.9
37	19.5	29.4	37	20.1	30.1	37	23.1	34.8	37	25.1	37.8	37	27.1	40.7
38	19.5	29.3	38	20.0	30.0	38	23.0	34.6	38	25.0	37.6	38	26.9	40.5
39	19.4	29.1	39	19.9	29.9	39	22.9	34.4	39	24.9	37.4	39	26.8	40.3
40	19.3	29.0	40	19.8	29.8	40	22.8	34.3	40	24.7	37.2	40	26.6	40.0

ASD	LRFD
Ω_c = 1.67	ϕ_c = 0.90

Table 4-22 (continued)
Available Critical Stress for Compression Members

F_y = 35 ksi			F_y = 36 ksi			F_y = 42 ksi			F_y = 46 ksi			F_y = 50 ksi		
$\frac{KL}{r}$	F_{cr}/Ω_c ksi ASD	$\phi_c F_{cr}$ ksi LRFD	$\frac{KL}{r}$	F_{cr}/Ω_c ksi ASD	$\phi_c F_{cr}$ ksi LRFD	$\frac{KL}{r}$	F_{cr}/Ω_c ksi ASD	$\phi_c F_{cr}$ ksi LRFD	$\frac{KL}{r}$	F_{cr}/Ω_c ksi ASD	$\phi_c F_{cr}$ ksi LRFD	$\frac{KL}{r}$	F_{cr}/Ω_c ksi ASD	$\phi_c F_{cr}$ ksi LRFD
41	19.2	28.9	41	19.7	29.7	41	22.7	34.1	41	24.6	37.0	41	26.5	39.8
42	19.2	28.8	42	19.6	29.5	42	22.6	33.9	42	24.5	36.8	42	26.3	39.5
43	19.1	28.7	43	19.6	29.4	43	22.5	33.7	43	24.3	36.6	43	26.2	39.3
44	19.0	28.5	44	19.5	29.3	44	22.3	33.6	44	24.2	36.3	44	26.0	39.1
45	18.9	28.4	45	19.4	29.1	45	22.2	33.4	45	24.0	36.1	45	25.8	38.8
46	18.8	28.3	46	19.3	29.0	46	22.1	33.2	46	23.9	35.9	46	25.6	38.5
47	18.7	28.1	47	19.2	28.9	47	22.0	33.0	47	23.8	35.7	47	25.5	38.3
48	18.6	28.0	48	19.1	28.7	48	21.8	32.8	48	23.6	35.4	48	25.3	38.0
49	18.5	27.9	49	19.0	28.5	49	21.7	32.6	49	23.4	35.2	49	25.1	37.7
50	18.4	27.7	50	18.9	28.4	50	21.6	32.4	50	23.3	35.0	50	24.9	37.5
51	18.3	27.6	51	18.8	28.3	51	21.4	32.2	51	23.1	34.8	51	24.8	37.2
52	18.3	27.4	52	18.7	28.1	52	21.3	32.0	52	23.0	34.5	52	24.6	36.9
53	18.2	27.3	53	18.6	28.0	53	21.2	31.8	53	22.8	34.3	53	24.4	36.7
54	18.1	27.1	54	18.5	27.8	54	21.0	31.6	54	22.6	34.0	54	24.2	36.4
55	18.0	27.0	55	18.4	27.6	55	20.9	31.4	55	22.5	33.8	55	24.0	36.1
56	17.9	26.8	56	18.3	27.5	56	20.7	31.2	56	22.3	33.5	56	23.8	35.8
57	17.7	26.7	57	18.2	27.3	57	20.6	31.0	57	22.1	33.3	57	23.6	35.5
58	17.6	26.5	58	18.1	27.1	58	20.5	30.7	58	22.0	33.0	58	23.4	35.2
59	17.5	26.4	59	17.9	27.0	59	20.3	30.5	59	21.8	32.8	59	23.2	34.9
60	17.4	26.2	60	17.8	26.8	60	20.2	30.3	60	21.6	32.5	60	23.0	34.6
61	17.3	26.0	61	17.7	26.6	61	20.0	30.1	61	21.4	32.2	61	22.8	34.3
62	17.2	25.9	62	17.6	26.5	62	19.9	29.9	62	21.3	32.0	62	22.6	34.0
63	17.1	25.7	63	17.5	26.3	63	19.7	29.6	63	21.1	31.7	63	22.4	33.7
64	17.0	25.5	64	17.4	26.1	64	19.6	29.4	64	20.9	31.4	64	22.2	33.4
65	16.9	25.4	65	17.3	25.9	65	19.4	29.2	65	20.7	31.2	65	22.0	33.0
66	16.8	25.2	66	17.1	25.8	66	19.2	28.9	66	20.5	30.9	66	21.8	32.7
67	16.7	25.0	67	17.0	25.6	67	19.1	28.7	67	20.4	30.6	67	21.6	32.4
68	16.5	24.9	68	16.9	25.4	68	18.9	28.5	68	20.2	30.3	68	21.4	32.1
69	16.4	24.7	69	16.8	25.2	69	18.8	28.2	69	20.0	30.1	69	21.1	31.8
70	16.3	24.5	70	16.7	25.0	70	18.6	28.0	70	19.8	29.8	70	20.9	31.4
71	16.2	24.3	71	16.5	24.8	71	18.5	27.7	71	19.6	29.5	71	20.7	31.1
72	16.1	24.2	72	16.4	24.7	72	18.3	27.5	72	19.4	29.2	72	20.5	30.8
73	16.0	24.0	73	16.3	24.5	73	18.1	27.2	73	19.2	28.9	73	20.3	30.5
74	15.8	23.8	74	16.2	24.3	74	18.0	27.0	74	19.1	28.6	74	20.1	30.2
75	15.7	23.6	75	16.0	24.1	75	17.8	26.8	75	18.9	28.4	75	19.8	29.8
76	15.6	23.4	76	15.9	23.9	76	17.6	26.5	76	18.7	28.1	76	19.6	29.5
77	15.5	23.3	77	15.8	23.7	77	17.5	26.3	77	18.5	27.8	77	19.4	29.2
78	15.4	23.1	78	15.6	23.5	78	17.3	26.0	78	18.3	27.5	78	19.2	28.8
79	15.2	22.9	79	15.5	23.3	79	17.1	25.8	79	18.1	27.2	79	19.0	28.5
80	15.1	22.7	80	15.4	23.1	80	17.0	25.5	80	17.9	26.9	80	18.8	28.2

ASD	LRFD
Ω_c = 1.67	ϕ_c = 0.90

Table 4-22 (continued)
Available Critical Stress for Compression Members

$F_y = 35$ ksi			$F_y = 36$ ksi			$F_y = 42$ ksi			$F_y = 46$ ksi			$F_y = 50$ ksi		
$\frac{KL}{r}$	F_{cr}/Ω_c ksi ASD	$\phi_c F_{cr}$ ksi LRFD	$\frac{KL}{r}$	F_{cr}/Ω_c ksi ASD	$\phi_c F_{cr}$ ksi LRFD	$\frac{KL}{r}$	F_{cr}/Ω_c ksi ASD	$\phi_c F_{cr}$ ksi LRFD	$\frac{KL}{r}$	F_{cr}/Ω_c ksi ASD	$\phi_c F_{cr}$ ksi LRFD	$\frac{KL}{r}$	F_{cr}/Ω_c ksi ASD	$\phi_c F_{cr}$ ksi LRFD
81	15.0	22.5	81	15.3	22.9	81	16.8	25.3	81	17.7	26.6	81	18.5	27.9
82	14.9	22.3	82	15.1	22.7	82	16.6	25.0	82	17.5	26.3	82	18.3	27.5
83	14.7	22.1	83	15.0	22.5	83	16.5	24.8	83	17.3	26.0	83	18.1	27.2
84	14.6	22.0	84	14.9	22.3	84	16.3	24.5	84	17.1	25.8	84	17.9	26.9
85	14.5	21.8	85	14.7	22.1	85	16.1	24.3	85	16.9	25.5	85	17.7	26.5
86	14.4	21.6	86	14.6	22.0	86	16.0	24.0	86	16.7	25.2	86	17.4	26.2
87	14.2	21.4	87	14.5	21.8	87	15.8	23.7	87	16.6	24.9	87	17.2	25.9
88	14.1	21.2	88	14.3	21.6	88	15.6	23.5	88	16.4	24.6	88	17.0	25.5
89	14.0	21.0	89	14.2	21.4	89	15.5	23.2	89	16.2	24.3	89	16.8	25.2
90	13.8	20.8	90	14.1	21.2	90	15.3	23.0	90	16.0	24.0	90	16.6	24.9
91	13.7	20.6	91	13.9	21.0	91	15.1	22.7	91	15.8	23.7	91	16.3	24.6
92	13.6	20.4	92	13.8	20.8	92	15.0	22.5	92	15.6	23.4	92	16.1	24.2
93	13.5	20.2	93	13.7	20.5	93	14.8	22.2	93	15.4	23.1	93	15.9	23.9
94	13.3	20.0	94	13.5	20.3	94	14.6	22.0	94	15.2	22.8	94	15.7	23.6
95	13.2	19.9	95	13.4	20.1	95	14.4	21.7	95	15.0	22.6	95	15.5	23.3
96	13.1	19.7	96	13.3	19.9	96	14.3	21.5	96	14.8	22.3	96	15.3	22.9
97	13.0	19.5	97	13.1	19.7	97	14.1	21.2	97	14.6	22.0	97	15.0	22.6
98	12.8	19.3	98	13.0	19.5	98	13.9	21.0	98	14.4	21.7	98	14.8	22.3
99	12.7	19.1	99	12.9	19.3	99	13.8	20.7	99	14.2	21.4	99	14.6	22.0
100	12.6	18.9	100	12.7	19.1	100	13.6	20.5	100	14.1	21.1	100	14.4	21.7
101	12.4	18.7	101	12.6	18.9	101	13.4	20.2	101	13.9	20.8	101	14.2	21.3
102	12.3	18.5	102	12.5	18.7	102	13.3	20.0	102	13.7	20.6	102	14.0	21.0
103	12.2	18.3	103	12.3	18.5	103	13.1	19.7	103	13.5	20.3	103	13.8	20.7
104	12.1	18.1	104	12.2	18.3	104	12.9	19.5	104	13.3	20.0	104	13.6	20.4
105	11.9	17.9	105	12.1	18.1	105	12.8	19.2	105	13.1	19.7	105	13.4	20.1
106	11.8	17.7	106	11.9	17.9	106	12.6	19.0	106	12.9	19.4	106	13.2	19.8
107	11.7	17.5	107	11.8	17.7	107	12.4	18.7	107	12.8	19.2	107	13.0	19.5
108	11.5	17.3	108	11.7	17.5	108	12.3	18.5	108	12.6	18.9	108	12.8	19.2
109	11.4	17.2	109	11.5	17.3	109	12.1	18.2	109	12.4	18.6	109	12.6	18.9
110	11.3	17.0	110	11.4	17.1	110	12.0	18.0	110	12.2	18.3	110	12.4	18.6
111	11.2	16.8	111	11.3	16.9	111	11.8	17.7	111	12.0	18.1	111	12.2	18.3
112	11.0	16.6	112	11.1	16.7	112	11.6	17.5	112	11.8	17.8	112	12.0	18.0
113	10.9	16.4	113	11.0	16.5	113	11.5	17.3	113	11.7	17.5	113	11.8	17.7
114	10.8	16.2	114	10.9	16.3	114	11.3	17.0	114	11.5	17.3	114	11.6	17.4
115	10.7	16.0	115	10.7	16.2	115	11.2	16.8	115	11.3	17.0	115	11.4	17.1
116	10.5	15.8	116	10.6	16.0	116	11.0	16.5	116	11.1	16.7	116	11.2	16.8
117	10.4	15.6	117	10.5	15.8	117	10.8	16.3	117	11.0	16.5	117	11.0	16.5
118	10.3	15.5	118	10.4	15.6	118	10.7	16.1	118	10.8	16.2	118	10.8	16.2
119	10.2	15.3	119	10.2	15.4	119	10.5	15.8	119	10.6	16.0	119	10.6	16.0
120	10.0	15.1	120	10.1	15.2	120	10.4	15.6	120	10.4	15.7	120	10.4	15.7

ASD	LRFD
$\Omega_c = 1.67$	$\phi_c = 0.90$

Table 4-22 (continued)
Available Critical Stress for Compression Members

$F_y = 35$ ksi			$F_y = 36$ ksi			$F_y = 42$ ksi			$F_y = 46$ ksi			$F_y = 50$ ksi		
$\frac{KL}{r}$	F_{cr}/Ω_c ksi ASD	$\phi_c F_{cr}$ ksi LRFD	$\frac{KL}{r}$	F_{cr}/Ω_c ksi ASD	$\phi_c F_{cr}$ ksi LRFD	$\frac{KL}{r}$	F_{cr}/Ω_c ksi ASD	$\phi_c F_{cr}$ ksi LRFD	$\frac{KL}{r}$	F_{cr}/Ω_c ksi ASD	$\phi_c F_{cr}$ ksi LRFD	$\frac{KL}{r}$	F_{cr}/Ω_c ksi ASD	$\phi_c F_{cr}$ ksi LRFD
121	9.91	14.9	121	10.0	15.0	121	10.2	15.4	121	10.3	15.4	121	10.3	15.4
122	9.79	14.7	122	9.85	14.8	122	10.1	15.2	122	10.1	15.2	122	10.1	15.2
123	9.67	14.5	123	9.72	14.6	123	9.93	14.9	123	9.94	14.9	123	9.94	14.9
124	9.55	14.3	124	9.59	14.4	124	9.78	14.7	124	9.78	14.7	124	9.78	14.7
125	9.43	14.2	125	9.47	14.2	125	9.62	14.5	125	9.62	14.5	125	9.62	14.5
126	9.31	14.0	126	9.35	14.0	126	9.47	14.2	126	9.47	14.2	126	9.47	14.2
127	9.19	13.8	127	9.22	13.9	127	9.32	14.0	127	9.32	14.0	127	9.32	14.0
128	9.07	13.6	128	9.10	13.7	128	9.17	13.8	128	9.17	13.8	128	9.17	13.8
129	8.95	13.4	129	8.98	13.5	129	9.03	13.6	129	9.03	13.6	129	9.03	13.6
130	8.83	13.3	130	8.86	13.3	130	8.89	13.4	130	8.89	13.4	130	8.89	13.4
131	8.71	13.1	131	8.73	13.1	131	8.76	13.2	131	8.76	13.2	131	8.76	13.2
132	8.60	12.9	132	8.61	12.9	132	8.63	13.0	132	8.63	13.0	132	8.63	13.0
133	8.48	12.7	133	8.49	12.8	133	8.50	12.8	133	8.50	12.8	133	8.50	12.8
134	8.37	12.6	134	8.37	12.6	134	8.37	12.6	134	8.37	12.6	134	8.37	12.6
135	8.25	12.4	135	8.25	12.4	135	8.25	12.4	135	8.25	12.4	135	8.25	12.4
136	8.13	12.2	136	8.13	12.2	136	8.13	12.2	136	8.13	12.2	136	8.13	12.2
137	8.01	12.0	137	8.01	12.0	137	8.01	12.0	137	8.01	12.0	137	8.01	12.0
138	7.89	11.9	138	7.89	11.9	138	7.89	11.9	138	7.89	11.9	138	7.89	11.9
139	7.78	11.7	139	7.78	11.7	139	7.78	11.7	139	7.78	11.7	139	7.78	11.7
140	7.67	11.5	140	7.67	11.5	140	7.67	11.5	140	7.67	11.5	140	7.67	11.5
141	7.56	11.4	141	7.56	11.4	141	7.56	11.4	141	7.56	11.4	141	7.56	11.4
142	7.45	11.2	142	7.45	11.2	142	7.45	11.2	142	7.45	11.2	142	7.45	11.2
143	7.35	11.0	143	7.35	11.0	143	7.35	11.0	143	7.35	11.0	143	7.35	11.0
144	7.25	10.9	144	7.25	10.9	144	7.25	10.9	144	7.25	10.9	144	7.25	10.9
145	7.15	10.7	145	7.15	10.7	145	7.15	10.7	145	7.15	10.7	145	7.15	10.7
146	7.05	10.6	146	7.05	10.6	146	7.05	10.6	146	7.05	10.6	146	7.05	10.6
147	6.96	10.5	147	6.96	10.5	147	6.96	10.5	147	6.96	10.5	147	6.96	10.5
148	6.86	10.3	148	6.86	10.3	148	6.86	10.3	148	6.86	10.3	148	6.86	10.3
149	6.77	10.2	149	6.77	10.2	149	6.77	10.2	149	6.77	10.2	149	6.77	10.2
150	6.68	10.0	150	6.68	10.0	150	6.68	10.0	150	6.68	10.0	150	6.68	10.0
151	6.59	9.91	151	6.59	9.91	151	6.59	9.91	151	6.59	9.91	151	6.59	9.91
152	6.51	9.78	152	6.51	9.78	152	6.51	9.78	152	6.51	9.78	152	6.51	9.78
153	6.42	9.65	153	6.42	9.65	153	6.42	9.65	153	6.42	9.65	153	6.42	9.65
154	6.34	9.53	154	6.34	9.53	154	6.34	9.53	154	6.34	9.53	154	6.34	9.53
155	6.26	9.40	155	6.26	9.40	155	6.26	9.40	155	6.26	9.40	155	6.26	9.40
156	6.18	9.28	156	6.18	9.28	156	6.18	9.28	156	6.18	9.28	156	6.18	9.28
157	6.10	9.17	157	6.10	9.17	157	6.10	9.17	157	6.10	9.17	157	6.10	9.17
158	6.02	9.05	158	6.02	9.05	158	6.02	9.05	158	6.02	9.05	158	6.02	9.05
159	5.95	8.94	159	5.95	8.94	159	5.95	8.94	159	5.95	8.94	159	5.95	8.94
160	5.87	8.82	160	5.87	8.82	160	5.87	8.82	160	5.87	8.82	160	5.87	8.82

ASD	LRFD
$\Omega_c = 1.67$	$\phi_c = 0.90$

Table 4–22 (continued)
Available Critical Stress for Compression Members

F_y = 35 ksi			F_y = 36 ksi			F_y = 42 ksi			F_y = 46 ksi			F_y = 50 ksi		
$\frac{KL}{r}$	F_{cr}/Ω_c ksi ASD	$\phi_c F_{cr}$ ksi LRFD	$\frac{KL}{r}$	F_{cr}/Ω_c ksi ASD	$\phi_c F_{cr}$ ksi LRFD	$\frac{KL}{r}$	F_{cr}/Ω_c ksi ASD	$\phi_c F_{cr}$ ksi LRFD	$\frac{KL}{r}$	F_{cr}/Ω_c ksi ASD	$\phi_c F_{cr}$ ksi LRFD	$\frac{KL}{r}$	F_{cr}/Ω_c ksi ASD	$\phi_c F_{cr}$ ksi LRFD
161	5.80	8.72	161	5.80	8.72	161	5.80	8.72	161	5.80	8.72	161	5.80	8.72
162	5.73	8.61	162	5.73	8.61	162	5.73	8.61	162	5.73	8.61	162	5.73	8.61
163	5.66	8.50	163	5.66	8.50	163	5.66	8.50	163	5.66	8.50	163	5.66	8.50
164	5.59	8.40	164	5.59	8.40	164	5.59	8.40	164	5.59	8.40	164	5.59	8.40
165	5.52	8.30	165	5.52	8.30	165	5.52	8.30	165	5.52	8.30	165	5.52	8.30
166	5.45	8.20	166	5.45	8.20	166	5.45	8.20	166	5.45	8.20	166	5.45	8.20
167	5.39	8.10	167	5.39	8.10	167	5.39	8.10	167	5.39	8.10	167	5.39	8.10
168	5.33	8.00	168	5.33	8.00	168	5.33	8.00	168	5.33	8.00	168	5.33	8.00
169	5.25	7.89	169	5.25	7.89	169	5.25	7.89	169	5.25	7.89	169	5.25	7.89
170	5.20	7.82	170	5.20	7.82	170	5.20	7.82	170	5.20	7.82	170	5.20	7.82
171	5.14	7.73	171	5.14	7.73	171	5.14	7.73	171	5.14	7.73	171	5.14	7.73
172	5.08	7.64	172	5.08	7.64	172	5.08	7.64	172	5.08	7.64	172	5.08	7.64
173	5.02	7.55	173	5.02	7.55	173	5.02	7.55	173	5.02	7.55	173	5.02	7.55
174	4.96	7.46	174	4.96	7.46	174	4.96	7.46	174	4.96	7.46	174	4.96	7.46
175	4.91	7.38	175	4.91	7.38	175	4.91	7.38	175	4.91	7.38	175	4.91	7.38
176	4.85	7.29	176	4.85	7.29	176	4.85	7.29	176	4.85	7.29	176	4.85	7.29
177	4.80	7.21	177	4.80	7.21	177	4.80	7.21	177	4.80	7.21	177	4.80	7.21
178	4.74	7.13	178	4.74	7.13	178	4.74	7.13	178	4.74	7.13	178	4.74	7.13
179	4.69	7.05	179	4.69	7.05	179	4.69	7.05	179	4.69	7.05	179	4.69	7.05
180	4.64	6.97	180	4.64	6.97	180	4.64	6.97	180	4.64	6.97	180	4.64	6.97
181	4.59	6.90	181	4.59	6.90	181	4.59	6.90	181	4.59	6.90	181	4.59	6.90
182	4.54	6.82	182	4.54	6.82	182	4.54	6.82	182	4.54	6.82	182	4.54	6.82
183	4.49	6.75	183	4.49	6.75	183	4.49	6.75	183	4.49	6.75	183	4.49	6.75
184	4.44	6.67	184	4.44	6.67	184	4.44	6.67	184	4.44	6.67	184	4.44	6.67
185	4.39	6.60	185	4.39	6.60	185	4.39	6.60	185	4.39	6.60	185	4.39	6.60
186	4.34	6.53	186	4.34	6.53	186	4.34	6.53	186	4.34	6.53	186	4.34	6.53
187	4.30	6.46	187	4.30	6.46	187	4.30	6.46	187	4.30	6.46	187	4.30	6.46
188	4.25	6.39	188	4.25	6.39	188	4.25	6.39	188	4.25	6.39	188	4.25	6.39
189	4.21	6.32	189	4.21	6.32	189	4.21	6.32	189	4.21	6.32	189	4.21	6.32
190	4.16	6.26	190	4.16	6.26	190	4.16	6.26	190	4.16	6.26	190	4.16	6.26
191	4.12	6.19	191	4.12	6.19	191	4.12	6.19	191	4.12	6.19	191	4.12	6.19
192	4.08	6.13	192	4.08	6.13	192	4.08	6.13	192	4.08	6.13	192	4.08	6.13
193	4.04	6.06	193	4.04	6.06	193	4.04	6.06	193	4.04	6.06	193	4.04	6.06
194	3.99	6.00	194	3.99	6.00	194	3.99	6.00	194	3.99	6.00	194	3.99	6.00
195	3.95	5.94	195	3.95	5.94	195	3.95	5.94	195	3.95	5.94	195	3.95	5.94
196	3.91	5.88	196	3.91	5.88	196	3.91	5.88	196	3.91	5.88	196	3.91	5.88
197	3.87	5.82	197	3.87	5.82	197	3.87	5.82	197	3.87	5.82	197	3.87	5.82
198	3.83	5.76	198	3.83	5.76	198	3.83	5.76	198	3.83	5.76	198	3.83	5.76
199	3.80	5.70	199	3.80	5.70	199	3.80	5.70	199	3.80	5.70	199	3.80	5.70
200	3.76	5.65	200	3.76	5.65	200	3.76	5.65	200	3.76	5.65	200	3.76	5.65

ASD	LRFD
Ω_c = 1.67	ϕ_c = 0.90

PART 5

DESIGN OF TENSION MEMBERS

SCOPE 5–2
GROSS AREA, NET AREA AND EFFECTIVE NET AREA 5–2
Gross Area 5–2
Effective Net Area 5–2
TENSILE STRENGTH 5–2
Yielding Limit State 5–2
Rupture Limit State 5–3
OTHER SPECIFICATION REQUIREMENTS AND DESIGN CONSIDERATIONS 5–3
Special Requirements for Heavy Shapes and Plates 5–3
Slenderness 5–3
DESIGN TABLE DISCUSSION 5–3
STEEL TENSION MEMBER SELECTION TABLES 5–5
Table 5-1. W-Shapes 5–5
Table 5-2. Angles 5–14
Table 5-3. WT-Shapes 5–18
Table 5-4. Rectangular HSS 5–27
Table 5-5. Square HSS 5–36
Table 5-6. Round HSS 5–39
Table 5-7. Pipe 5–44
Table 5-8. Double Angles 5–46

SCOPE

The specification requirements and other design considerations summarized in this Part apply to the design of members subject to static axial tension. For fatigue applications, see AISC *Specification* Appendix 3. For the design of members subject to eccentric tension or combined tension and flexure, see Part 6.

GROSS AREA, NET AREA AND EFFECTIVE NET AREA

In the determination of the available strength of a tension member, the gross area, A_g, is needed for the tensile yielding limit state and the effective net area, A_e, is needed for the tensile rupture limit state, as stipulated in AISC *Specification* Section D2.

Gross Area

The gross area, A_g, is determined as specified in AISC *Specification* Section B4.3a.

Effective Net Area

The effective net area, A_e, is determined from AISC *Specification* Section D3 by multiplying the net area, A_n, by the shear lag coefficient, U, where A_n is determined for tension members per AISC *Specification* Section B4.3b and U is determined from AISC *Specification* Table D3.1. Shear lag parameters are illustrated in AISC *Specification* Commentary Figures C-D3.1, C-D3.2 and C-D3.4.

TENSILE STRENGTH

The limit-state of tensile yielding will control the available tensile strength over tensile rupture when the following relationship is satisfied:

LRFD	ASD
$0.90F_yA_g \le 0.75F_uA_e$ (5-1a)	$\frac{F_yA_g}{1.67} \le \frac{F_uA_e}{2.00}$ (5-1b)

These expressions are both reduced to:

$$\frac{A_e}{A_g} \ge 1.2\frac{F_y}{F_u} \tag{5-2}$$

Otherwise, the limit state of tensile rupture will control over tensile yielding.

Yielding Limit State

The available tensile strength due to tensile yielding, which must equal or exceed the required strength, P_u or P_a, is determined for tension members, per AISC *Specification* Section D2(a), using Equation D2-1.

Rupture Limit State

The available tensile strength due to tensile rupture, which must equal or exceed the required strength, P_u or P_a, is determined for tension members, per AISC *Specification* Section D2(b) using Equation D2-2.

OTHER SPECIFICATION REQUIREMENTS AND DESIGN CONSIDERATIONS

Special Requirements for Heavy Shapes and Plates

For tension members with complete-joint-penetration groove welded joints and made from heavy shapes with a flange thickness exceeding 2 in. or built-up sections consisting of plates with a thickness exceeding 2 in., see AISC *Specification* Sections A3.1c and Section A3.1d.

Slenderness

Tension member slenderness ratio, L/r, should preferably be limited to a maximum of 300 per the User Note in AISC *Specification* Section D1. The intent of this recommendation is explained in the corresponding Commentary.

DESIGN TABLE DISCUSSION

Available tensile strengths for various types of tension members (see individual descriptions below) are given in Tables 5-1 through 5-8 for the limit states of tensile yielding and tensile rupture. In each case, the tabulated values for available tensile rupture strength are based upon the assumption that $A_e = 0.75A_g$, which is arbitrarily selected as a value that is practical to achieve with typical end connections. Such consideration of the effective net area during the design of the member will simplify the design of its end connections, which can be difficult to configure and costly if tension members are selected based upon available tensile yielding strength only, without considering the reduction in strength due to the connection.

When $A_e > 0.75A_g$, either the tabulated values for available tensile rupture strength can be used conservatively or the available tensile rupture strength can be calculated based upon the actual value of A_e. When $A_e < 0.75A_g$, the tabulated values of the available tensile rupture strength cannot be used, but rather must be calculated based upon the actual value of A_e.

Table 5-1. W-Shapes

Available strengths in axial tension are given for W-shapes with $F_y = 50$ ksi and $F_u = 65$ ksi (ASTM A992). Note that tensile rupture will control over tensile yielding for W-shapes with $F_y = 50$ ksi and $F_u = 65$ ksi when $A_e/A_g < 0.923$. Otherwise, tensile yielding will control over tensile rupture.

Table 5-2. Angles

Available strengths in axial tension are given for single angles with $F_y = 36$ ksi and $F_u = 58$ ksi (ASTM A36). Note that tensile rupture will control over tensile yielding for single angles with $F_y = 36$ ksi and $F_u = 58$ ksi when $A_e/A_g < 0.745$. Otherwise, tensile yielding will control over tensile rupture.

Table 5-3. WT-Shapes

Table 5-3 is similar to Table 5-1, except that it covers WT-shapes with $F_y = 50$ ksi and $F_u = 65$ ksi (ASTM A992).

Table 5-4. Rectangular HSS

Available strengths in axial tension are given for rectangular HSS with $F_y = 46$ ksi and $F_u = 58$ ksi (ASTM A500 Grade B). Note that tensile rupture will control over tensile yielding for rectangular HSS with $F_y = 46$ ksi and $F_u = 58$ ksi when $A_e/A_g < 0.952$. Otherwise, tensile yielding will control over tensile rupture.

Table 5-5. Square HSS

Table 5-5 is similar to Table 5-4, except that it covers square HSS with $F_y = 46$ ksi and $F_u = 58$ ksi (ASTM A500 Grade B).

Table 5-6. Round HSS

Available strengths in axial tension are given for ASTM A500 round HSS with $F_y = 42$ ksi and $F_u = 58$ ksi (ASTM A500 Grade B). Note that tensile rupture will control over tensile yielding for round HSS with $F_y = 42$ ksi and $F_u = 58$ ksi when $A_e/A_g < 0.869$. Otherwise, tensile yielding will control over tensile rupture.

Table 5-7. Pipe

Available strengths in axial tension are given for pipe with $F_y = 35$ ksi and $F_u = 60$ ksi (ASTM A53 Grade B). Note that tensile rupture will control over tensile yielding for pipe with $F_y = 35$ ksi and $F_u = 60$ ksi when $A_e/A_g < 0.700$. Otherwise, tensile yielding will control over tensile rupture.

Table 5-8. Double Angles

Available strengths in axial tension are given for double angles with $F_y = 36$ ksi and $F_u = 58$ ksi (ASTM A36). Note that tensile rupture will control over tensile yielding for double angles with $F_y = 36$ ksi and $F_u = 58$ ksi when $A_e/A_g < 0.745$. Otherwise, tensile yielding will control over tensile rupture.

Table 5-1
Available Strength in Axial Tension
W-Shapes

F_y = 50 ksi
F_u = 65 ksi

W44-W40

Shape	Gross Area, A_g	$A_e = 0.75A_g$	Yielding		Rupture	
			kips		kips	
			P_n/Ω_t	$\phi_t P_n$	P_n/Ω_t	$\phi_t P_n$
	in.²	in.²	ASD	LRFD	ASD	LRFD
W44×335	98.5	73.9	2950	4430	2400	3600
×290	85.4	64.1	2560	3840	2080	3120
×262	77.2	57.9	2310	3470	1880	2820
×230	67.8	50.9	2030	3050	1650	2480
W40×593[h]	174	131	5210	7830	4260	6390
×503[h]	148	111	4430	6660	3610	5410
×431[h]	127	95.3	3800	5720	3100	4650
×397[h]	117	87.8	3500	5270	2850	4280
×372[h]	110	82.5	3290	4950	2680	4020
×362[h]	106	79.5	3170	4770	2580	3880
×324	95.3	71.5	2850	4290	2320	3490
×297	87.3	65.5	2610	3930	2130	3190
×277	81.5	61.1	2440	3670	1990	2980
×249	73.5	55.1	2200	3310	1790	2690
×215	63.5	47.6	1900	2860	1550	2320
×199	58.8	44.1	1760	2650	1430	2150
W40×392[h]	116	87.0	3470	5220	2830	4240
×331[h]	97.7	73.3	2930	4400	2380	3570
×327[h]	95.9	71.9	2870	4320	2340	3510
×294	86.2	64.7	2580	3880	2100	3150
×278	82.3	61.7	2460	3700	2010	3010
×264	77.4	58.1	2320	3480	1890	2830
×235	69.1	51.8	2070	3110	1680	2530
×211	62.1	46.6	1860	2790	1510	2270
×183	53.3	40.0	1600	2400	1300	1950
×167	49.3	37.0	1480	2220	1200	1800
×149	43.8	32.9	1310	1970	1070	1600

Limit State	ASD	LRFD
Yielding	$\Omega_t = 1.67$	$\phi_t = 0.90$
Rupture	$\Omega_t = 2.00$	$\phi_t = 0.75$

[h] Flange thickness is greater than 2 in. Special requirements may apply per AISC *Specification* Section A3.1c.

Note: Tensile rupture on the effective net area will control over tensile yielding on the gross area unless the tension member is selected so that an end connection can be configured with $A_e \geq 0.923A_g$.

W36-W33

Table 5-1 (continued)
Available Strength in Axial Tension
W-Shapes

F_y = 50 ksi
F_u = 65 ksi

Shape	Gross Area, A_g	$A_e = 0.75A_g$	Yielding, kips		Rupture, kips	
			P_n/Ω_t	$\phi_t P_n$	P_n/Ω_t	$\phi_t P_n$
	in.²	in.²	ASD	LRFD	ASD	LRFD
W36×652[h]	192	144	5750	8640	4680	7020
×529[h]	156	117	4670	7020	3800	5700
×487[h]	143	107	4280	6440	3480	5220
×441[h]	130	97.5	3890	5850	3170	4750
×395[h]	116	87.0	3470	5220	2830	4240
×361[h]	106	79.5	3170	4770	2580	3880
×330	96.9	72.7	2900	4360	2360	3540
×302	89.0	66.8	2660	4010	2170	3260
×282	82.9	62.2	2480	3730	2020	3030
×262	77.2	57.9	2310	3470	1880	2820
×247	72.5	54.4	2170	3260	1770	2650
×231	68.2	51.2	2040	3070	1660	2500
W36×256	75.3	56.5	2250	3390	1840	2750
×232	68.0	51.0	2040	3060	1660	2490
×210	61.9	46.4	1850	2790	1510	2260
×194	57.0	42.8	1710	2570	1390	2090
×182	53.6	40.2	1600	2410	1310	1960
×170	50.0	37.5	1500	2250	1220	1830
×160	47.0	35.3	1410	2120	1150	1720
×150	44.3	33.2	1330	1990	1080	1620
×135	39.9	29.9	1190	1800	972	1460
W33×387[h]	114	85.5	3410	5130	2780	4170
×354[h]	104	78.0	3110	4680	2540	3800
×318	93.7	70.3	2810	4220	2280	3430
×291	85.6	64.2	2560	3850	2090	3130
×263	77.4	58.1	2320	3480	1890	2830
×241	71.1	53.3	2130	3200	1730	2600
×221	65.3	49.0	1960	2940	1590	2390
×201	59.1	44.3	1770	2660	1440	2160

Limit State	ASD	LRFD
Yielding	$\Omega_t = 1.67$	$\phi_t = 0.90$
Rupture	$\Omega_t = 2.00$	$\phi_t = 0.75$

[h] Flange thickness is greater than 2 in. Special requirements may apply per AISC *Specification* Section A3.1c.

Note: Tensile rupture on the effective net area will control over tensile yielding on the gross area unless the tension member is selected so that an end connection can be configured with $A_e \geq 0.923A_g$.

Table 5-1 (continued)
Available Strength in Axial Tension
W-Shapes

F_y = 50 ksi
F_u = 65 ksi

W33-W27

Shape	Gross Area, A_g	$A_e = 0.75A_g$	Yielding kips		Rupture kips	
			P_n/Ω_t	$\phi_t P_n$	P_n/Ω_t	$\phi_t P_n$
	in.²	in.²	ASD	LRFD	ASD	LRFD
W33×169	49.5	37.1	1480	2230	1210	1810
×152	44.9	33.7	1340	2020	1100	1640
×141	41.5	31.1	1240	1870	1010	1520
×130	38.3	28.7	1150	1720	933	1400
×118	34.7	26.0	1040	1560	845	1270
W30×391[h]	115	86.3	3440	5180	2800	4210
×357[h]	105	78.8	3140	4730	2560	3840
×326[h]	95.9	71.9	2870	4320	2340	3510
×292	86.0	64.5	2570	3870	2100	3140
×261	77.0	57.8	2310	3470	1880	2820
×235	69.3	52.0	2070	3120	1690	2540
×211	62.3	46.7	1870	2800	1520	2280
×191	56.1	42.1	1680	2520	1370	2050
×173	50.9	38.2	1520	2290	1240	1860
W30×148	43.6	32.7	1310	1960	1060	1590
×132	38.8	29.1	1160	1750	946	1420
×124	36.5	27.4	1090	1640	891	1340
×116	34.2	25.7	1020	1540	835	1250
×108	31.7	23.8	949	1430	774	1160
×99	29.0	21.8	868	1310	709	1060
×90	26.3	19.7	787	1180	640	960
W27×539[h]	159	119	4760	7160	3870	5800
×368[h]	109	81.8	3230	4910	2660	3990
×336[h]	99.2	74.4	2970	4460	2420	3630
×307[h]	90.2	67.7	2700	4060	2200	3300
×281	83.1	62.3	2490	3740	2020	3040
×258	76.1	57.1	2280	3420	1860	2780
×235	69.4	52.1	2080	3120	1690	2540
×217	63.9	47.9	1910	2880	1560	2340
×194	57.1	42.8	1710	2570	1390	2090
×178	52.5	39.4	1570	2360	1280	1920
×161	47.6	35.7	1430	2140	1160	1740
×146	43.2	32.4	1290	1940	1050	1580

Limit State	ASD	LRFD
Yielding	$\Omega_t = 1.67$	$\phi_t = 0.90$
Rupture	$\Omega_t = 2.00$	$\phi_t = 0.75$

[h] Flange thickness is greater than 2 in. Special requirements may apply per AISC *Specification* Section A3.1c.

Note: Tensile rupture on the effective net area will control over tensile yielding on the gross area unless the tension member is selected so that an end connection can be configured with $A_e \geq 0.923A_g$.

W27-W21

Table 5-1 (continued)
Available Strength in Axial Tension
W-Shapes

F_y = 50 ksi
F_u = 65 ksi

Shape	Gross Area, A_g	A_e = 0.75A_g	Yielding		Rupture	
			kips		kips	
			P_n/Ω_t	$\phi_t P_n$	P_n/Ω_t	$\phi_t P_n$
	in.²	in.²	ASD	LRFD	ASD	LRFD
W27×129	37.8	28.4	1130	1700	923	1380
×114	33.6	25.2	1010	1510	819	1230
×102	30.0	22.5	898	1350	731	1100
×94	27.6	20.7	826	1240	673	1010
×84	24.7	18.5	740	1110	601	902
W24×370[h]	109	81.8	3260	4910	2660	3990
×335[h]	98.3	73.7	2940	4420	2400	3590
×306[h]	89.7	67.3	2690	4040	2190	3280
×279[h]	81.9	61.4	2450	3690	2000	2990
×250	73.5	55.1	2200	3310	1790	2690
×229	67.2	50.4	2010	3020	1640	2460
×207	60.7	45.5	1820	2730	1480	2220
×192	56.5	42.4	1690	2540	1380	2070
×176	51.7	38.8	1550	2330	1260	1890
×162	47.8	35.9	1430	2150	1170	1750
×146	43.0	32.3	1290	1940	1050	1570
×131	38.6	29.0	1160	1740	943	1410
×117	34.4	25.8	1030	1550	839	1260
×104	30.7	23.0	919	1380	748	1120
W24×103	30.3	22.7	907	1360	738	1110
×94	27.7	20.8	829	1250	676	1010
×84	24.7	18.5	740	1110	601	902
×76	22.4	16.8	671	1010	546	819
×68	20.1	15.1	602	905	491	736
W24×62	18.2	13.7	545	819	445	668
×55	16.2	12.2	485	729	397	595
W21×201	59.3	44.5	1780	2670	1450	2170
×182	53.6	40.2	1600	2410	1310	1960
×166	48.8	36.6	1460	2200	1190	1780
×147	43.2	32.4	1290	1940	1050	1580
×132	38.8	29.1	1160	1750	946	1420
×122	35.9	26.9	1070	1620	874	1310
×111	32.6	24.5	976	1470	796	1190
×101	29.8	22.4	892	1340	728	1090

Limit State	ASD	LRFD
Yielding	Ω_t = 1.67	ϕ_t = 0.90
Rupture	Ω_t = 2.00	ϕ_t = 0.75

[h] Flange thickness is greater than 2 in. Special requirements may apply per AISC *Specification* Section A3.1c.

Note: Tensile rupture on the effective net area will control over tensile yielding on the gross area unless the tension member is selected so that an end connection can be configured with $A_e \geq 0.923A_g$.

Table 5-1 (continued)
Available Strength in Axial Tension
W-Shapes

F_y = 50 ksi
F_u = 65 ksi

W21-W18

Shape	Gross Area, A_g	$A_e = 0.75A_g$	Yielding		Rupture	
			kips		kips	
			P_n/Ω_t	$\phi_t P_n$	P_n/Ω_t	$\phi_t P_n$
	in.²	in.²	ASD	LRFD	ASD	LRFD
W21×93	27.3	20.5	817	1230	666	999
×83	24.4	18.3	731	1100	595	892
×73	21.5	16.1	644	968	523	785
×68	20.0	15.0	599	900	488	731
×62	18.3	13.7	548	824	445	668
×55	16.2	12.2	485	729	397	595
×48	14.1	10.6	422	635	345	517
W21×57	16.7	12.5	500	752	406	609
×50	14.7	11.0	440	662	358	536
×44	13.0	9.75	389	585	317	475
W18×311[h]	91.6	68.7	2740	4120	2230	3350
×283[h]	83.3	62.5	2490	3750	2030	3050
×258[h]	76.0	57.0	2280	3420	1850	2780
×234[h]	68.6	51.5	2050	3090	1670	2510
×211	62.3	46.7	1870	2800	1520	2280
×192	56.2	42.2	1680	2530	1370	2060
×175	51.4	38.6	1540	2310	1250	1880
×158	46.3	34.7	1390	2080	1130	1690
×143	42.0	31.5	1260	1890	1020	1540
×130	38.3	28.7	1150	1720	933	1400
×119	35.1	26.3	1050	1580	855	1280
×106	31.1	23.3	931	1400	757	1140
×97	28.5	21.4	853	1280	696	1040
×86	25.3	19.0	757	1140	618	926
×76	22.3	16.7	668	1000	543	814
W18×71	20.9	15.7	626	941	510	765
×65	19.1	14.3	572	860	465	697
×60	17.6	13.2	527	792	429	644
×55	16.2	12.2	485	729	397	595
×50	14.7	11.0	440	662	358	536
W18×46	13.5	10.1	404	608	328	492
×40	11.8	8.85	353	531	288	431
×35	10.3	7.73	308	464	251	377

Limit State	ASD	LRFD
Yielding	$\Omega_t = 1.67$	$\phi_t = 0.90$
Rupture	$\Omega_t = 2.00$	$\phi_t = 0.75$

[h] Flange thickness is greater than 2 in. Special requirements may apply per AISC *Specification* Section A3.1c.

Note: Tensile rupture on the effective net area will control over tensile yielding on the gross area unless the tension member is selected so that an end connection can be configured with $A_e \geq 0.923A_g$.

W16-W14

Table 5-1 (continued)
Available Strength in Axial Tension
W-Shapes

F_y = 50 ksi
F_u = 65 ksi

Shape	Gross Area, A_g	$A_e = 0.75A_g$	Yielding		Rupture	
			kips		kips	
			P_n/Ω_t	$\phi_t P_n$	P_n/Ω_t	$\phi_t P_n$
	in.²	in.²	ASD	LRFD	ASD	LRFD
W16×100	29.4	22.1	880	1320	718	1080
×89	26.2	19.7	784	1180	640	960
×77	22.6	17.0	677	1020	553	829
×67	19.6	14.7	587	882	478	717
W16×57	16.8	12.6	503	756	410	614
×50	14.7	11.0	440	662	358	536
×45	13.3	9.98	398	599	324	487
×40	11.8	8.85	353	531	288	431
×36	10.6	7.95	317	477	258	388
W16×31	9.13	6.85	273	411	223	334
×26	7.68	5.76	230	346	187	281
W14×730[h]	215	161	6440	9680	5230	7850
×665[h]	196	147	5870	8820	4780	7170
×605[h]	178	134	5330	8010	4360	6530
×550[h]	162	122	4850	7290	3970	5950
×500[h]	147	110	4400	6620	3580	5360
×455[h]	134	101	4010	6030	3280	4920
×426[h]	125	93.8	3740	5630	3050	4570
×398[h]	117	87.8	3500	5270	2850	4280
×370[h]	109	81.8	3260	4910	2660	3990
×342[h]	101	75.8	3020	4550	2460	3700
×311[h]	91.4	68.6	2740	4110	2230	3340
×283[h]	83.3	62.5	2490	3750	2030	3050
×257	75.6	56.7	2260	3400	1840	2760
×233	68.5	51.4	2050	3080	1670	2510
×211	62.0	46.5	1860	2790	1510	2270
×193	56.8	42.6	1700	2560	1380	2080
×176	51.8	38.9	1550	2330	1260	1900
×159	46.7	35.0	1400	2100	1140	1710
×145	42.7	32.0	1280	1920	1040	1560

Limit State	ASD	LRFD
Yielding	$\Omega_t = 1.67$	$\phi_t = 0.90$
Rupture	$\Omega_t = 2.00$	$\phi_t = 0.75$

[h] Flange thickness is greater than 2 in. Special requirements may apply per AISC *Specification* Section A3.1c.

Note: Tensile rupture on the effective net area will control over tensile yielding on the gross area unless the tension member is selected so that an end connection can be configured with $A_e \geq 0.923A_g$.

Table 5-1 (continued)

Available Strength in Axial Tension

W-Shapes

F_y = 50 ksi
F_u = 65 ksi

W14-W12

Shape	Gross Area, A_g	$A_e = 0.75A_g$	Yielding		Rupture	
			kips		kips	
			P_n/Ω_t	$\phi_t P_n$	P_n/Ω_t	$\phi_t P_n$
	in.²	in.²	ASD	LRFD	ASD	LRFD
W14×132	38.8	29.1	1160	1750	946	1420
×120	35.3	26.5	1060	1590	861	1290
×109	32.0	24.0	958	1440	780	1170
×99	29.1	21.8	871	1310	709	1060
×90	26.5	19.9	793	1190	647	970
W14×82	24.0	18.0	719	1080	585	878
×74	21.8	16.4	653	981	533	800
×68	20.0	15.0	599	900	488	731
×61	17.9	13.4	536	806	436	653
W14×53	15.6	11.7	467	702	380	570
×48	14.1	10.6	422	635	345	517
×43	12.6	9.45	377	567	307	461
W14×38	11.2	8.40	335	504	273	410
×34	10.0	7.50	299	450	244	366
×30	8.85	6.64	265	398	216	324
W14×26	7.69	5.77	230	346	188	281
×22	6.49	4.87	194	292	158	237
W12×336[h]	98.9	74.2	2960	4450	2410	3620
×305[h]	89.5	67.1	2680	4030	2180	3270
×279[h]	81.9	61.4	2450	3690	2000	2990
×252[h]	74.1	55.6	2220	3330	1810	2710
×230[h]	67.7	50.8	2030	3050	1650	2480
×210	61.8	46.4	1850	2780	1510	2260
×190	56.0	42.0	1680	2520	1370	2050
×170	50.0	37.5	1500	2250	1220	1830
×152	44.7	33.5	1340	2010	1090	1630
×136	39.9	29.9	1190	1800	972	1460
×120	35.2	26.4	1050	1580	858	1290
×106	31.2	23.4	934	1400	761	1140
×96	28.2	21.2	844	1270	689	1030
×87	25.6	19.2	766	1150	624	936
×79	23.2	17.4	695	1040	566	848
×72	21.1	15.8	632	950	514	770
×65	19.1	14.3	572	860	465	697

Limit State	ASD	LRFD
Yielding	$\Omega_t = 1.67$	$\phi_t = 0.90$
Rupture	$\Omega_t = 2.00$	$\phi_t = 0.75$

[h] Flange thickness is greater than 2 in. Special requirements may apply per AISC *Specification* Section A3.1c.

Note: Tensile rupture on the effective net area will control over tensile yielding on the gross area unless the tension member is selected so that an end connection can be configured with $A_e \geq 0.923A_g$.

W12-W10

Table 5-1 (continued)
Available Strength in Axial Tension
W-Shapes

F_y = 50 ksi
F_u = 65 ksi

Shape	Gross Area, A_g	A_e = 0.75A_g	Yielding		Rupture	
			kips		kips	
			P_n/Ω_t	$\phi_t P_n$	P_n/Ω_t	$\phi_t P_n$
	in.²	in.²	ASD	LRFD	ASD	LRFD
W12×58	17.0	12.8	509	765	416	624
×53	15.6	11.7	467	702	380	570
W12×50	14.6	11.0	437	657	358	536
×45	13.1	9.83	392	590	319	479
×40	11.7	8.78	350	527	285	428
W12×35	10.3	7.73	308	464	251	377
×30	8.79	6.59	263	396	214	321
×26	7.65	5.74	229	344	187	280
W12×22	6.48	4.86	194	292	158	237
×19	5.57	4.18	167	251	136	204
×16	4.71	3.53	141	212	115	172
×14	4.16	3.12	125	187	101	152
W10×112	32.9	24.7	985	1480	803	1200
×100	29.3	22.0	877	1320	715	1070
×88	26.0	19.5	778	1170	634	951
×77	22.7	17.0	680	1020	553	829
×68	19.9	14.9	596	896	484	726
×60	17.7	13.3	530	797	432	648
×54	15.8	11.9	473	711	387	580
×49	14.4	10.8	431	648	351	527
W10×45	13.3	9.98	398	599	324	487
×39	11.5	8.63	344	518	280	421
×33	9.71	7.28	291	437	237	355
W10×30	8.84	6.63	265	398	215	323
×26	7.61	5.71	228	342	186	278
×22	6.49	4.87	194	292	158	237
W10×19	5.62	4.22	168	253	137	206
×17	4.99	3.74	149	225	122	182
×15	4.41	3.31	132	198	108	161
×12	3.54	2.66	106	159	86.5	130

Limit State	ASD	LRFD
Yielding	Ω_t = 1.67	ϕ_t = 0.90
Rupture	Ω_t = 2.00	ϕ_t = 0.75

Note: Tensile rupture on the effective net area will control over tensile yielding on the gross area unless the tension member is selected so that an end connection can be configured with $A_e \geq 0.923A_g$.

Table 5-1 (continued)

Available Strength in Axial Tension

W-Shapes

F_y = 50 ksi
F_u = 65 ksi

W8

Shape	Gross Area, A_g	A_e = 0.75A_g	Yielding		Rupture	
			kips		kips	
			P_n/Ω_t	$\phi_t P_n$	P_n/Ω_t	$\phi_t P_n$
	in.²	in.²	ASD	LRFD	ASD	LRFD
W8×67	19.7	14.8	590	887	481	722
×58	17.1	12.8	512	770	416	624
×48	14.1	10.6	422	635	345	517
×40	11.7	8.78	350	527	285	428
×35	10.3	7.73	308	464	251	377
×31	9.13	6.85	273	411	223	334
W8×28	8.25	6.19	247	371	201	302
×24	7.08	5.31	212	319	173	259
W8×21	6.16	4.62	184	277	150	225
×18	5.26	3.95	157	237	128	193
W8×15	4.44	3.33	133	200	108	162
×13	3.84	2.88	115	173	93.6	140
×10	2.96	2.22	88.6	133	72.2	108

Limit State	ASD	LRFD
Yielding	Ω_t = 1.67	ϕ_t = 0.90
Rupture	Ω_t = 2.00	ϕ_t = 0.75

Note: Tensile rupture on the effective net area will control over tensile yielding on the gross area unless the tension member is selected so that an end connection can be configured with $A_e \geq 0.923A_g$.

Table 5-2
Available Strength in Axial Tension

F_y = 36 ksi
F_u = 58 ksi

Angles

L8-L6

Shape	Gross Area, A_g	$A_e = 0.75A_g$	Yielding kips		Rupture kips	
			P_n/Ω_t	$\phi_t P_n$	P_n/Ω_t	$\phi_t P_n$
	in.²	in.²	ASD	LRFD	ASD	LRFD
L8×8×1 1/8	16.8	12.6	362	544	365	548
×1	15.1	11.3	326	489	328	492
×7/8	13.3	9.98	287	431	289	434
×3/4	11.5	8.63	248	373	250	375
×5/8	9.69	7.27	209	314	211	316
×9/16	8.77	6.58	189	284	191	286
×1/2	7.84	5.88	169	254	171	256
L8×6×1	13.1	9.83	282	424	285	428
×7/8	11.5	8.63	248	373	250	375
×3/4	9.99	7.49	215	324	217	326
×5/8	8.41	6.31	181	272	183	274
×9/16	7.61	5.71	164	247	166	248
×1/2	6.80	5.10	147	220	148	222
×7/16	5.99	4.49	129	194	130	195
L8×4×1	11.1	8.33	239	360	242	362
×7/8	9.79	7.34	211	317	213	319
×3/4	8.49	6.37	183	275	185	277
×5/8	7.16	5.37	154	232	156	234
×9/16	6.49	4.87	140	210	141	212
×1/2	5.80	4.35	125	188	126	189
×7/16	5.11	3.83	110	166	111	167
L7×4×3/4	7.74	5.81	167	251	168	253
×5/8	6.50	4.88	140	211	142	212
×1/2	5.26	3.95	113	170	115	172
×7/16	4.63	3.47	99.8	150	101	151
×3/8	4.00	3.00	86.2	130	87.0	131
L6×6×1	11.0	8.25	237	356	239	359
×7/8	9.75	7.31	210	316	212	318
×3/4	8.46	6.35	182	274	184	276
×5/8	7.13	5.35	154	231	155	233
×9/16	6.45	4.84	139	209	140	211
×1/2	5.77	4.33	124	187	126	188
×7/16	5.08	3.81	110	165	110	166
×3/8	4.38	3.29	94.4	142	95.4	143
×5/16	3.67	2.75	79.1	119	79.8	120

Limit State	ASD	LRFD
Yielding	$\Omega_t = 1.67$	$\phi_t = 0.90$
Rupture	$\Omega_t = 2.00$	$\phi_t = 0.75$

Note: Tensile rupture on the effective net area will control over tensile yielding on the gross area unless the tension member is selected so that an end connection can be configured with $A_e \geq 0.745A_g$.

Table 5-2 (continued)
Available Strength in Axial Tension
Angles

F_y = 36 ksi
F_u = 58 ksi

L6-L5

Shape	Gross Area, A_g	$A_e = 0.75A_g$	Yielding kips		Rupture kips	
			P_n/Ω_t	$\phi_t P_n$	P_n/Ω_t	$\phi_t P_n$
	in.²	in.²	ASD	LRFD	ASD	LRFD
L6×4×7/8	8.00	6.00	172	259	174	261
×3/4	6.94	5.21	150	225	151	227
×5/8	5.86	4.40	126	190	128	191
×9/16	5.31	3.98	114	172	115	173
×1/2	4.75	3.56	102	154	103	155
×7/16	4.18	3.14	90.1	135	91.1	137
×3/8	3.61	2.71	77.8	117	78.6	118
×5/16	3.03	2.27	65.3	98.2	65.8	98.7
L6×3½×½	4.50	3.38	97.0	146	98.0	147
×3/8	3.44	2.58	74.2	111	74.8	112
×5/16	2.89	2.17	62.3	93.6	62.9	94.4
L5×5×7/8	8.00	6.00	172	259	174	261
×3/4	6.98	5.24	150	226	152	228
×5/8	5.90	4.43	127	191	128	193
×1/2	4.79	3.59	103	155	104	156
×7/16	4.22	3.17	91.0	137	91.9	138
×3/8	3.65	2.74	78.7	118	79.5	119
×5/16	3.07	2.30	66.2	99.5	66.7	100
L5×3½×¾	5.85	4.39	126	190	127	191
×5/8	4.93	3.70	106	160	107	161
×1/2	4.00	3.00	86.2	130	87.0	131
×3/8	3.05	2.29	65.7	98.8	66.4	99.6
×5/16	2.56	1.92	55.2	82.9	55.7	83.5
×1/4	2.07	1.55	44.6	67.1	45.0	67.4
L5×3×½	3.75	2.81	80.8	122	81.5	122
×7/16	3.31	2.48	71.4	107	71.9	108
×3/8	2.86	2.15	61.7	92.7	62.4	93.5
×9/16	2.41	1.81	52.0	78.1	52.5	78.7
×1/4	1.94	1.46	41.8	62.9	42.3	63.5

Limit State	ASD	LRFD
Yielding	$\Omega_t = 1.67$	$\phi_t = 0.90$
Rupture	$\Omega_t = 2.00$	$\phi_t = 0.75$

Note: Tensile rupture on the effective net area will control over tensile yielding on the gross area unless the tension member is selected so that an end connection can be configured with $A_e \geq 0.745A_g$.

Table 5-2 (continued)
Available Strength in Axial Tension
Angles

F_y = 36 ksi
F_u = 58 ksi

L4-L3½

Shape	Gross Area, A_g	$A_e = 0.75A_g$	Yielding kips		Rupture kips	
			P_n/Ω_t	$\phi_t P_n$	P_n/Ω_t	$\phi_t P_n$
	in.²	in.²	ASD	LRFD	ASD	LRFD
L4×4×¾	5.44	4.08	117	176	118	177
×⅝	4.61	3.46	99.4	149	100	151
×½	3.75	2.81	80.8	122	81.5	122
×7/16	3.30	2.48	71.1	107	71.9	108
×⅜	2.86	2.15	61.7	92.7	62.4	93.5
×5/16	2.40	1.80	51.7	77.8	52.2	78.3
×¼	1.93	1.45	41.6	62.5	42.1	63.1
L4×3½×½	3.50	2.63	75.4	113	76.3	114
×⅜	2.68	2.01	57.8	86.8	58.3	87.4
×5/16	2.25	1.69	48.5	72.9	49.0	73.5
×¼	1.82	1.37	39.2	59.0	39.7	59.6
L4×3×⅝	3.99	2.99	86.0	129	86.7	130
×½	3.25	2.44	70.1	105	70.8	106
×⅜	2.49	1.87	53.7	80.7	54.2	81.3
×5/16	2.09	1.57	45.1	67.7	45.5	68.3
×¼	1.69	1.27	36.4	54.8	36.8	55.2
L3½×3½×½	3.25	2.44	70.1	105	70.8	106
×7/16	2.89	2.17	62.3	93.6	62.9	94.4
×⅜	2.50	1.88	53.9	81.0	54.5	81.8
×5/16	2.10	1.58	45.3	68.0	45.8	68.7
×¼	1.70	1.28	36.6	55.1	37.1	55.7
L3½×3×½	3.02	2.27	65.1	97.8	65.8	98.7
×7/16	2.67	2.00	57.6	86.5	58.0	87.0
×⅜	2.32	1.74	50.0	75.2	50.5	75.7
×5/16	1.95	1.46	42.0	63.2	42.3	63.5
×¼	1.58	1.19	34.1	51.2	34.5	51.8
L3½×2½×½	2.77	2.08	59.7	89.7	60.3	90.5
×⅜	2.12	1.59	45.7	68.7	46.1	69.2
×5/16	1.79	1.34	38.6	58.0	38.9	58.3
×¼	1.45	1.09	31.3	47.0	31.6	47.4

Limit State	ASD	LRFD
Yielding	$\Omega_t = 1.67$	$\phi_t = 0.90$
Rupture	$\Omega_t = 2.00$	$\phi_t = 0.75$

Note: Tensile rupture on the effective net area will control over tensile yielding on the gross area unless the tension member is selected so that an end connection can be configured with $A_e \geq 0.745A_g$.

Table 5-2 (continued)

F_y = 36 ksi
F_u = 58 ksi

Available Strength in Axial Tension

Angles

L3-L2

Shape	Gross Area, A_g	$A_e = 0.75A_g$	Yielding		Rupture	
			kips		kips	
			P_n/Ω_t	$\phi_t P_n$	P_n/Ω_t	$\phi_t P_n$
	in.²	in.²	ASD	LRFD	ASD	LRFD
L3×3×1/2	2.76	2.07	59.5	89.4	60.0	90.0
×7/16	2.43	1.82	52.4	78.7	52.8	79.2
×3/8	2.11	1.58	45.5	68.4	45.8	68.7
×5/16	1.78	1.34	38.4	57.7	38.9	58.3
×1/4	1.44	1.08	31.0	46.7	31.3	47.0
×3/16	1.09	0.818	23.5	35.3	23.7	35.6
L3×2 1/2×1/2	2.50	1.88	53.9	81.0	54.5	81.8
×7/16	2.22	1.67	47.9	71.9	48.4	72.6
×3/8	1.93	1.45	41.6	62.5	42.1	63.1
×5/16	1.63	1.22	35.1	52.8	35.4	53.1
×1/4	1.32	0.990	28.5	42.8	28.7	43.1
×3/16	1.00	0.750	21.6	32.4	21.8	32.6
L3×2×1/2	2.26	1.70	48.7	73.2	49.3	74.0
×3/8	1.75	1.31	37.7	56.7	38.0	57.0
×5/16	1.48	1.11	31.9	48.0	32.2	48.3
×1/4	1.20	0.900	25.9	38.9	26.1	39.2
×3/16	0.917	0.688	19.8	29.7	20.0	29.9
L2 1/2×2 1/2×1/2	2.26	1.70	48.7	73.2	49.3	74.0
×3/8	1.73	1.30	37.3	56.1	37.7	56.6
×5/16	1.46	1.10	31.5	47.3	31.9	47.9
×1/4	1.19	0.893	25.7	38.6	25.9	38.8
×3/16	0.901	0.676	19.4	29.2	19.6	29.4
L2 1/2×2×3/8	1.55	1.16	33.4	50.2	33.6	50.5
×5/16	1.32	0.990	28.5	42.8	28.7	43.1
×1/4	1.07	0.803	23.1	34.7	23.3	34.9
×3/16	0.818	0.614	17.6	26.5	17.8	26.7
L2 1/2×1 1/2×1/4	0.947	0.710	20.4	30.7	20.6	30.9
×3/16	0.724	0.543	15.6	23.5	15.7	23.6
L2×2×3/8	1.37	1.03	29.5	44.4	29.9	44.8
×5/16	1.16	0.870	25.0	37.6	25.2	37.8
×1/4	0.944	0.708	20.3	30.6	20.5	30.8
×3/16	0.722	0.542	15.6	23.4	15.5	23.6
×1/8	0.491	0.368	10.6	15.9	10.7	16.0

Limit State	ASD	LRFD
Yielding	$\Omega_t = 1.67$	$\phi_t = 0.90$
Rupture	$\Omega_t = 2.00$	$\phi_t = 0.75$

Note: Tensile rupture on the effective net area will control over tensile yielding on the gross area unless the tension member is selected so that an end connection can be configured with $A_e \geq 0.745A_g$.

WT22–WT20

Table 5-3
Available Strength in Axial Tension
WT-Shapes

F_y = 50 ksi
F_u = 65 ksi

Shape	Gross Area, A_g	A_e = 0.75A_g	Yielding		Rupture	
			kips		kips	
			P_n/Ω_t	$\phi_t P_n$	P_n/Ω_t	$\phi_t P_n$
	in.²	in.²	ASD	LRFD	ASD	LRFD
WT22×167.5	49.2	36.9	1470	2210	1200	1800
×145	42.6	32.0	1280	1920	1040	1560
×131	38.5	28.9	1150	1730	939	1410
×115	33.9	25.4	1010	1530	826	1240
WT20×296.5[h]	87.2	65.4	2610	3920	2130	3190
×251.5[h]	74.0	55.5	2220	3330	1800	2710
×215.5[h]	63.3	47.5	1900	2850	1540	2320
×198.5[h]	58.3	43.7	1750	2620	1420	2130
×186[h]	54.7	41.0	1640	2460	1330	2000
×181[h]	53.2	39.9	1590	2390	1300	1950
×162	47.7	35.8	1430	2150	1160	1750
×148.5	43.6	32.7	1310	1960	1060	1590
×138.5	40.7	30.5	1220	1830	991	1490
×124.5	36.7	27.5	1100	1650	894	1340
×107.5	31.8	23.9	952	1430	777	1170
×99.5	29.2	21.9	874	1310	712	1070
WT20×196[h]	57.8	43.4	1730	2600	1410	2120
×165.5[h]	48.8	36.6	1460	2200	1190	1780
×163.5[h]	47.9	35.9	1430	2160	1170	1750
×147	43.1	32.3	1290	1940	1050	1570
×139	41.0	30.8	1230	1850	1000	1500
×132	38.7	29.0	1160	1740	943	1410
×117.5	34.6	26.0	1040	1560	845	1270
×105.5	31.1	23.3	931	1400	757	1140
×91.5	26.7	20.0	799	1200	650	975
×83.5	24.5	18.4	734	1100	598	897
×74.5	21.9	16.4	656	986	533	800

Limit State	ASD	LRFD
Yielding	Ω_t = 1.67	ϕ_t = 0.90
Rupture	Ω_t = 2.00	ϕ_t = 0.75

[h] Flange thickness is greater than 2 in. Special requirements may apply per *AISC Specification* Section A3.1c.

Note: Tensile rupture on the effective net area will control over tensile yielding on the gross area unless the tension member is selected so that an end connection can be configured with $A_e \geq 0.923A_g$.

F_y = 50 ksi
F_u = 65 ksi

Table 5-3 (continued)
Available Strength in Axial Tension
WT-Shapes

WT18-WT16.5

Shape	Gross Area, A_g	$A_e = 0.75A_g$	Yielding, kips		Rupture, kips	
			P_n/Ω_t	$\phi_t P_n$	P_n/Ω_t	$\phi_t P_n$
	in.²	in.²	ASD	LRFD	ASD	LRFD
WT18×326[h]	96.2	72.2	2880	4330	2350	3520
×264.5[h]	77.8	58.4	2330	3500	1900	2850
×243.5[h]	71.7	53.8	2150	3230	1750	2620
×220.5[h]	64.9	48.7	1940	2920	1580	2370
×197.5[h]	58.1	43.6	1740	2610	1420	2130
×180.5[h]	53.0	39.8	1590	2390	1290	1940
×165	48.4	36.3	1450	2180	1180	1770
×151	44.5	33.4	1330	2000	1090	1630
×141	41.5	31.1	1240	1870	1010	1520
×131	38.5	28.9	1150	1730	939	1410
×123.5	36.3	27.2	1090	1630	884	1330
×115.5	34.1	25.6	1020	1530	832	1250
WT18×128	37.6	28.2	1130	1690	917	1370
×116	34.0	25.5	1020	1530	829	1240
×105	30.9	23.2	925	1390	754	1130
×97	28.5	21.4	853	1280	696	1040
×91	26.8	20.1	802	1210	653	980
×85	25.0	18.8	749	1130	611	917
×80	23.5	17.6	704	1060	572	858
×75	22.1	16.6	662	995	540	809
×67.5	19.9	14.9	596	896	484	726
WT16.5×193.5[h]	57.0	42.8	1710	2570	1390	2090
×177[h]	52.1	39.1	1560	2340	1270	1910
×159	46.8	35.1	1400	2110	1140	1710
×145.5	42.8	32.1	1280	1930	1040	1560
×131.5	38.7	29.0	1160	1740	943	1410
×120.5	35.6	26.7	1070	1600	868	1300
×110.5	32.6	24.5	976	1470	796	1190
×100.5	29.7	22.3	889	1340	725	1090

Limit State	ASD	LRFD
Yielding	$\Omega_t = 1.67$	$\phi_t = 0.90$
Rupture	$\Omega_t = 2.00$	$\phi_t = 0.75$

[h] Flange thickness is greater than 2 in. Special requirements may apply per AISC *Specification* Section A3.1c.

Note: Tensile rupture on the effective net area will control over tensile yielding on the gross area unless the tension member is selected so that an end connection can be configured with $A_e \geq 0.923A_g$.

WT16.5-WT13.5

Table 5-3 (continued)
Available Strength in Axial Tension
WT-Shapes

F_y = 50 ksi
F_u = 65 ksi

Shape	Gross Area, A_g	$A_e = 0.75A_g$	Yielding		Rupture	
			kips		kips	
			P_n/Ω_t	$\phi_t P_n$	P_n/Ω_t	$\phi_t P_n$
	in.²	in.²	ASD	LRFD	ASD	LRFD
WT16.5×84.5	24.7	18.5	740	1110	601	902
×76	22.5	16.9	674	1010	549	824
×70.5	20.7	15.5	620	932	504	756
×65	19.1	14.3	572	860	465	697
×59	17.4	13.1	521	783	426	639
WT15×195.5[h]	57.6	43.2	1720	2590	1400	2110
×178.5[h]	52.5	39.4	1570	2360	1280	1920
×163[h]	48.0	36.0	1440	2160	1170	1760
×146	43.0	32.3	1290	1940	1050	1570
×130.5	38.5	28.9	1150	1730	939	1410
×117.5	34.7	26.0	1040	1560	845	1270
×105.5	31.1	23.3	931	1400	757	1140
×95.5	28.0	21.0	838	1260	683	1020
×86.5	25.4	19.1	760	1140	621	931
WT15×74	21.8	16.4	653	981	533	800
×66	19.5	14.6	584	878	475	712
×62	18.2	13.7	545	819	445	668
×58	17.1	12.8	512	770	416	624
×54	15.9	11.9	476	716	387	580
×49.5	14.5	10.9	434	653	354	531
×45	13.2	9.90	395	594	322	483
WT13.5×269.5[h]	79.3	59.5	2370	3570	1930	2900
×184[h]	54.2	40.7	1620	2440	1320	1980
×168[h]	49.5	37.1	1480	2230	1210	1810
×153.5[h]	45.2	33.9	1350	2030	1100	1650
×140.5	41.5	31.1	1240	1870	1010	1520
×129	38.1	28.6	1140	1710	930	1390
×117.5	34.7	26.0	1040	1560	845	1270
×108.5	32.0	24.0	958	1440	780	1170
×97	28.6	21.5	856	1290	699	1050
×89	26.3	19.7	787	1180	640	960
×80.5	23.8	17.9	713	1070	582	873
×73	21.6	16.2	647	972	527	790

Limit State	ASD	LRFD
Yielding	$\Omega_t = 1.67$	$\phi_t = 0.90$
Rupture	$\Omega_t = 2.00$	$\phi_t = 0.75$

[h] Flange thickness is greater than 2 in. Special requirements may apply per AISC *Specification* Section A3.1c.

Note: Tensile rupture on the effective net area will control over tensile yielding on the gross area unless the tension member is selected so that an end connection can be configured with $A_e \geq 0.923A_g$.

Table 5-3 (continued)

Available Strength in Axial Tension

WT-Shapes

F_y = 50 ksi
F_u = 65 ksi

WT13.5-WT10.5

Shape	Gross Area, A_g	$A_e = 0.75A_g$	Yielding		Rupture	
			kips		kips	
			P_n/Ω_t	$\phi_t P_n$	P_n/Ω_t	$\phi_t P_n$
	in.²	in.²	ASD	LRFD	ASD	LRFD
WT13.5×64.5	18.9	14.2	566	851	462	692
×57	16.8	12.6	503	756	410	614
×51	15.0	11.3	449	675	367	551
×47	13.8	10.4	413	621	338	507
×42	12.4	9.30	371	558	302	453
WT12×185[h]	54.5	40.9	1630	2450	1330	1990
×167.5[h]	49.1	36.8	1470	2210	1200	1790
×153[h]	44.9	33.7	1340	2020	1100	1640
×139.5[h]	41.0	30.8	1230	1850	1000	1500
×125	36.8	27.6	1100	1660	897	1350
×114.5	33.6	25.2	1010	1510	819	1230
×103.5	30.3	22.7	907	1360	738	1110
×96	28.2	21.2	844	1270	689	1030
×88	25.8	19.4	772	1160	631	946
×81	23.9	17.9	716	1080	582	873
×73	21.5	16.1	644	968	523	785
×65.5	19.3	14.5	578	869	471	707
×58.5	17.2	12.9	515	774	419	629
×52	15.3	11.5	458	689	374	561
WT12×51.5	15.1	11.3	452	680	367	551
×47	13.8	10.4	413	621	338	507
×42	12.4	9.30	371	558	302	453
×38	11.2	8.40	335	504	273	410
×34	10.0	7.50	299	450	244	366
WT12×31	9.11	6.83	273	410	222	333
×27.5	8.10	6.08	243	365	198	296
WT10.5×100.5	29.6	22.2	886	1330	722	1080
×91	26.8	20.1	802	1210	653	980
×83	24.4	18.3	731	1100	595	892
×73.5	21.6	16.2	647	972	527	790
×66	19.4	14.6	581	873	475	712
×61	17.9	13.4	536	806	436	653
×55.5	16.3	12.2	488	734	397	595
×50.5	14.9	11.2	446	671	364	546

Limit State	ASD	LRFD
Yielding	$\Omega_t = 1.67$	$\phi_t = 0.90$
Rupture	$\Omega_t = 2.00$	$\phi_t = 0.75$

[h] Flange thickness is greater than 2 in. Special requirements may apply per AISC *Specification* Section A3.1c.

Note: Tensile rupture on the effective net area will control over tensile yielding on the gross area unless the tension member is selected so that an end connection can be configured with $A_e \geq 0.923A_g$.

WT10.5-WT9

Table 5-3 (continued)
Available Strength in Axial Tension
WT-Shapes

$F_y = 50$ ksi
$F_u = 65$ ksi

Shape	Gross Area, A_g	$A_e = 0.75A_g$	Yielding, kips		Rupture, kips	
			P_n/Ω_t	$\phi_t P_n$	P_n/Ω_t	$\phi_t P_n$
	in.²	in.²	ASD	LRFD	ASD	LRFD
WT10.5×46.5	13.7	10.3	410	617	335	502
×41.5	12.2	9.15	365	549	297	446
×36.5	10.7	8.03	320	482	261	391
×34	10.0	7.50	299	450	244	366
×31	9.13	6.85	273	411	223	334
×27.5	8.10	6.08	243	365	198	296
×24	7.07	5.30	212	318	172	258
WT10.5×28.5	8.37	6.28	251	377	204	306
×25	7.36	5.52	220	331	179	269
×22	6.49	4.87	194	292	158	237
WT9×155.5[h]	45.8	34.4	1370	2060	1120	1680
×141.5[h]	41.7	31.3	1250	1880	1020	1530
×129[h]	38.0	28.5	1140	1710	926	1390
×117[h]	34.3	25.7	1030	1540	835	1250
×105.5	31.2	23.4	934	1400	761	1140
×96	28.1	21.1	841	1260	686	1030
×87.5	25.7	19.3	769	1160	627	941
×79	23.2	17.4	695	1040	566	848
×71.5	21.0	15.8	629	945	514	770
×65	19.2	14.4	575	864	468	702
×59.5	17.6	13.2	527	792	429	644
×53	15.6	11.7	467	702	380	570
×48.5	14.2	10.7	425	639	348	522
×43	12.7	9.53	380	572	310	465
×38	11.1	8.33	332	500	271	406
WT9×35.5	10.4	7.80	311	468	254	380
×32.5	9.55	7.16	286	430	233	349
×30	8.82	6.62	264	397	215	323
×27.5	8.10	6.08	243	365	198	296
×25	7.34	5.51	220	330	179	269
WT9×23	6.77	5.08	203	305	165	248
×20	5.88	4.41	176	265	143	215
×17.5	5.15	3.86	154	232	125	188

Limit State	ASD	LRFD
Yielding	$\Omega_t = 1.67$	$\phi_t = 0.90$
Rupture	$\Omega_t = 2.00$	$\phi_t = 0.75$

[h] Flange thickness is greater than 2 in. Special requirements may apply per AISC *Specification* Section A3.1c.

Note: Tensile rupture on the effective net area will control over tensile yielding on the gross area unless the tension member is selected so that an end connection can be configured with $A_e \geq 0.923A_g$.

Table 5-3 (continued)
Available Strength in Axial Tension
WT-Shapes

F_y = 50 ksi
F_u = 65 ksi

WT8-WT7

Shape	Gross Area, A_g	A_e = 0.75A_g	Yielding		Rupture	
			kips		kips	
			P_n/Ω_t	$\phi_t P_n$	P_n/Ω_t	$\phi_t P_n$
	in.²	in.²	ASD	LRFD	ASD	LRFD
WT8×50	14.7	11.0	440	662	358	536
×44.5	13.1	9.83	392	590	319	479
×38.5	11.3	8.48	338	509	276	413
×33.5	9.81	7.36	294	441	239	359
WT8×28.5	8.39	6.29	251	378	204	307
×25	7.37	5.53	221	332	180	270
×22.5	6.63	4.97	199	298	162	242
×20	5.89	4.42	176	265	144	215
×18	5.29	3.97	158	238	129	194
WT8×15.5	4.56	3.42	137	205	111	167
×13	3.84	2.88	115	173	93.6	140
WT7×365[h]	107	80.3	3200	4820	2610	3910
×332.5[h]	97.8	73.4	2930	4400	2390	3580
×302.5[h]	89.0	66.8	2660	4010	2170	3260
×275[h]	80.9	60.7	2420	3640	1970	2960
×250[h]	73.5	55.1	2200	3310	1790	2690
×227.5[h]	66.9	50.2	2000	3010	1630	2450
×213[h]	62.7	47.0	1880	2820	1530	2290
×199[h]	58.4	43.8	1750	2630	1420	2140
×185[h]	54.4	40.8	1630	2450	1330	1990
×171[h]	50.3	37.7	1510	2260	1230	1840
×155.5[h]	45.7	34.3	1370	2060	1110	1670
×141.5[h]	41.6	31.2	1250	1870	1010	1520
×128.5	37.8	28.4	1130	1700	923	1380
×116.5	34.2	25.7	1020	1540	835	1250
×105.5	31.0	23.3	928	1400	757	1140
×96.5	28.4	21.3	850	1280	692	1040
×88	25.9	19.4	775	1170	631	946
×79.5	23.4	17.6	701	1050	572	858
×72.5	21.3	16.0	638	959	520	780

Limit State	ASD	LRFD
Yielding	Ω_t = 1.67	ϕ_t = 0.90
Rupture	Ω_t = 2.00	ϕ_t = 0.75

[h] Flange thickness is greater than 2 in. Special requirements may apply per AISC *Specification* Section A3.1c.

Note: Tensile rupture on the effective net area will control over tensile yielding on the gross area unless the tension member is selected so that an end connection can be configured with $A_e \geq 0.923A_g$.

WT7-WT6

Table 5-3 (continued)
Available Strength in Axial Tension
WT-Shapes

F_y = 50 ksi
F_u = 65 ksi

Shape	Gross Area, A_g	A_e = 0.75A_g	Yielding		Rupture	
			kips		kips	
			P_n/Ω_t	$\phi_t P_n$	P_n/Ω_t	$\phi_t P_n$
	in.²	in.²	ASD	LRFD	ASD	LRFD
WT7×66	19.4	14.6	581	873	475	712
×60	17.7	13.3	530	797	432	648
×54.5	16.0	12.0	479	720	390	585
×49.5	14.6	11.0	437	657	358	536
×45	13.2	9.90	395	594	322	483
WT7×41	12.0	9.00	359	540	293	439
×37	10.9	8.18	326	491	266	399
×34	10.0	7.50	299	450	244	366
×30.5	8.96	6.72	268	403	218	328
WT7×26.5	7.80	5.85	234	351	190	285
×24	7.07	5.30	212	318	172	258
×21.5	6.31	4.73	189	284	154	231
WT7×19	5.58	4.19	167	251	136	204
×17	5.00	3.75	150	225	122	183
×15	4.42	3.32	132	199	108	162
WT7×13	3.85	2.89	115	173	93.9	141
×11	3.25	2.44	97.3	146	79.3	119
WT6×168[h]	49.5	37.1	1480	2230	1210	1810
×152.5[h]	44.7	33.5	1340	2010	1090	1630
×139.5[h]	41.0	30.8	1230	1850	1000	1500
×126[h]	37.1	27.8	1110	1670	904	1360
×115[h]	33.8	25.4	1010	1520	826	1240
×105	30.9	23.2	925	1390	754	1130
×95	28.0	21.0	838	1260	683	1020
×85	25.0	18.8	749	1130	611	917
×76	22.4	16.8	671	1010	546	819
×68	20.0	15.0	599	900	488	731
×60	17.6	13.2	527	792	429	644
×53	15.6	11.7	467	702	380	570
×48	14.1	10.6	422	635	345	517
×43.5	12.8	9.60	383	576	312	468
×39.5	11.6	8.70	347	522	283	424
×36	10.6	7.95	317	477	258	388
×32.5	9.54	7.16	286	429	233	349

Limit State	ASD	LRFD
Yielding	Ω_t = 1.67	ϕ_t = 0.90
Rupture	Ω_t = 2.00	ϕ_t = 0.75

[h] Flange thickness is greater than 2 in. Special requirements may apply per AISC *Specification* Section A3.1c.

Note: Tensile rupture on the effective net area will control over tensile yielding on the gross area unless the tension member is selected so that an end connection can be configured with $A_e \geq 0.923A_g$.

Table 5-3 (continued)

Available Strength in Axial Tension

WT-Shapes

F_y = 50 ksi
F_u = 65 ksi

WT6-WT5

Shape	Gross Area, A_g	A_e = $0.75A_g$	Yielding kips		Rupture kips	
			P_n/Ω_t	$\phi_t P_n$	P_n/Ω_t	$\phi_t P_n$
	in.²	in.²	ASD	LRFD	ASD	LRFD
WT6×29	8.52	6.39	255	383	208	312
×26.5	7.78	5.84	233	350	190	285
WT6×25	7.30	5.48	219	329	178	267
×22.5	6.56	4.92	196	295	160	240
×20	5.84	4.38	175	263	142	214
WT6×17.5	5.17	3.88	155	233	126	189
×15	4.40	3.30	132	198	107	161
×13	3.82	2.87	114	172	93.3	140
WT6×11	3.24	2.43	97.0	146	79.0	118
×9.5	2.79	2.09	83.5	126	67.9	102
×8	2.36	1.77	70.7	106	57.5	86.3
×7	2.08	1.56	62.3	93.6	50.7	76.1
WT5×56	16.5	12.4	494	743	403	605
×50	14.7	11.0	440	662	358	536
×44	13.0	9.75	389	585	317	475
×38.5	11.3	8.48	338	509	276	413
×34	10.0	7.50	299	450	244	366
×30	8.84	6.63	265	398	215	323
×27	7.90	5.93	237	356	193	289
×24.5	7.21	5.41	216	324	176	264
WT5×22.5	6.63	4.97	199	298	162	242
×19.5	5.73	4.30	172	258	140	210
×16.5	4.85	3.64	145	218	118	177
WT5×15	4.42	3.32	132	199	108	162
×13	3.81	2.86	114	171	93.0	139
×11	3.24	2.43	97.0	146	79.0	118
WT5×9.5	2.81	2.11	84.1	126	68.6	103
×8.5	2.50	1.88	74.9	113	61.1	91.7
×7.5	2.21	1.66	66.2	99.5	54.0	80.9
×6	1.77	1.33	53.0	79.7	43.2	64.8

Limit State	ASD	LRFD
Yielding	$\Omega_t = 1.67$	$\phi_t = 0.90$
Rupture	$\Omega_t = 2.00$	$\phi_t = 0.75$

Note: Tensile rupture on the effective net area will control over tensile yielding on the gross area unless the tension member is selected so that an end connection can be configured with $A_e \geq 0.923A_g$.

WT4

Table 5-3 (continued)
Available Strength in Axial Tension
WT-Shapes

F_y = 50 ksi
F_u = 65 ksi

Shape	Gross Area, A_g	A_e = 0.75A_g	Yielding, kips		Rupture, kips	
			P_n/Ω_t	$\phi_t P_n$	P_n/Ω_t	$\phi_t P_n$
	in.²	in.²	ASD	LRFD	ASD	LRFD
WT4×33.5	9.84	7.38	295	443	240	360
×29	8.54	6.41	256	384	208	312
×24	7.05	5.29	211	317	172	258
×20	5.87	4.40	176	264	143	215
×17.5	5.14	3.86	154	231	125	188
×15.5	4.56	3.42	137	205	111	167
WT4×14	4.12	3.09	123	185	100	151
×12	3.54	2.66	106	159	86.5	130
WT4×10.5	3.08	2.31	92.2	139	75.1	113
×9	2.63	1.97	78.7	118	64.0	96.0
WT4×7.5	2.22	1.67	66.5	99.9	54.3	81.4
×6.5	1.92	1.44	57.5	86.4	46.8	70.2
×5	1.48	1.11	44.3	66.6	36.1	54.1

Limit State	ASD	LRFD
Yielding	Ω_t = 1.67	ϕ_t = 0.90
Rupture	Ω_t = 2.00	ϕ_t = 0.75

Note: Tensile rupture on the effective net area will control over tensile yielding on the gross area unless the tension member is selected so that an end connection can be configured with $A_e \geq 0.923A_g$.

Table 5-4
Available Strength in Axial Tension
Rectangular HSS

F_y = 46 ksi
F_u = 58 ksi

HSS20-HSS16

Shape	Gross Area, A_g	A_e = 0.75A_g	Yielding kips		Rupture kips	
			P_n/Ω_t	$\phi_t P_n$	P_n/Ω_t	$\phi_t P_n$
	in.²	in.²	ASD	LRFD	ASD	LRFD
HSS20×12×5/8	35.0	26.3	964	1450	763	1140
×1/2	28.3	21.2	780	1170	615	922
×3/8	21.5	16.1	592	890	467	700
×5/16	18.1	13.6	499	749	394	592
HSS20×8×5/8	30.3	22.7	835	1250	658	987
×1/2	24.6	18.5	678	1020	537	805
×3/8	18.7	14.0	515	774	406	609
×5/16	15.7	11.8	432	650	342	513
HSS20×4×1/2	20.9	15.7	576	865	455	683
×3/8	16.0	12.0	441	662	348	522
×5/16	13.4	10.1	369	555	293	439
×1/4	10.8	8.10	297	447	235	352
HSS18×6×5/8	25.7	19.3	708	1060	560	840
×1/2	20.9	15.7	576	865	455	683
×3/8	16.0	12.0	441	662	348	522
×5/16	13.4	10.1	369	555	293	439
×1/4	10.8	8.10	297	447	235	352
HSS16×12×5/8	30.3	22.7	835	1250	658	987
×1/2	24.6	18.5	678	1020	537	805
×3/8	18.7	14.0	515	774	406	609
×5/16	15.7	11.8	432	650	342	513
HSS16×8×5/8	25.7	19.3	708	1060	560	840
×1/2	20.9	15.7	576	865	455	683
×3/8	16.0	12.0	441	662	348	522
×1/4	10.8	8.10	297	447	235	352
HSS16×4×5/8	21.0	15.8	578	869	458	687
×1/2	17.2	12.9	474	712	374	561
×3/8	13.2	9.90	364	546	287	431
×5/16	11.1	8.32	306	460	241	362
×1/4	8.96	6.72	247	371	195	292
×3/16	6.76	5.07	186	280	147	221

Limit State	ASD	LRFD
Yielding	Ω_t = 1.67	ϕ_t = 0.90
Rupture	Ω_t = 2.00	ϕ_t = 0.75

Note: Tensile rupture on the effective net area will control over tensile yielding on the gross area unless the tension member is selected so that an end connection can be configured with $A_e \geq 0.952A_g$.

HSS14-HSS12

Table 5-4 (continued)
Available Strength in Axial Tension
Rectangular HSS

F_y = 46 ksi
F_u = 58 ksi

Shape	Gross Area, A_g	A_e = 0.75A_g	Yielding		Rupture	
			kips		kips	
			P_n/Ω_t	$\phi_t P_n$	P_n/Ω_t	$\phi_t P_n$
	in.²	in.²	ASD	LRFD	ASD	LRFD
HSS14×10×5/8	25.7	19.3	708	1060	560	840
×1/2	20.9	15.7	576	865	455	683
×3/8	16.0	12.0	441	662	348	522
×5/16	13.4	10.1	369	555	293	439
×1/4	10.8	8.10	297	447	235	352
HSS14×6×5/8	21.0	15.8	578	869	458	687
×1/2	17.2	12.9	474	712	374	561
×3/8	13.2	9.90	364	546	287	431
×5/16	11.1	8.32	306	460	241	362
×1/4	8.96	6.72	247	371	195	292
×3/16	6.76	5.07	186	280	147	221
HSS14×4×5/8	18.7	14.0	515	774	406	609
×1/2	15.3	11.5	421	633	334	500
×3/8	11.8	8.85	325	489	257	385
×5/16	9.92	7.44	273	411	216	324
×1/4	8.03	6.02	221	332	175	262
×3/16	6.06	4.55	167	251	132	198
HSS12×10×1/2	19.0	14.3	523	787	415	622
×3/8	14.6	10.9	402	604	316	474
×5/16	12.2	9.15	336	505	265	398
×1/4	9.90	7.43	273	410	215	323
HSS12×8×5/8	21.0	15.8	578	869	458	687
×1/2	17.2	12.9	474	712	374	561
×3/8	13.2	9.90	364	546	287	431
×5/16	11.1	8.32	306	460	241	362
×1/4	8.96	6.72	247	371	195	292
×3/16	6.76	5.07	186	280	147	221
HSS12×6×5/8	18.7	14.0	515	774	406	609
×1/2	15.3	11.5	421	633	334	500
×3/8	11.8	8.85	325	489	257	385
×5/16	9.92	7.44	273	411	216	324
×1/4	8.03	6.02	221	332	175	262
×3/16	6.06	4.55	167	251	132	198

Limit State	ASD	LRFD
Yielding	Ω_t = 1.67	ϕ_t = 0.90
Rupture	Ω_t = 2.00	ϕ_t = 0.75

Note: Tensile rupture on the effective net area will control over tensile yielding on the gross area unless the tension member is selected so that an end connection can be configured with $A_e \geq 0.952A_g$.

Table 5-4 (continued)
Available Strength in Axial Tension
Rectangular HSS

$F_y = 46$ ksi
$F_u = 58$ ksi

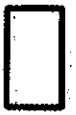

HSS12-HSS10

Shape	Gross Area, A_g	$A_e = 0.75A_g$	Yielding kips		Rupture kips	
			P_n/Ω_t	$\phi_t P_n$	P_n/Ω_t	$\phi_t P_n$
	in.²	in.²	ASD	LRFD	ASD	LRFD
HSS12×4×3/8	16.4	12.3	452	679	357	535
×1/2	13.5	10.1	372	559	293	439
×3/8	10.4	7.80	286	431	226	339
×5/16	8.76	6.57	241	363	191	286
×1/4	7.10	5.33	196	294	155	232
×3/16	5.37	4.03	148	222	117	175
HSS12×3½×3/8	10.0	7.50	275	414	218	326
×5/16	8.46	6.34	233	350	184	276
HSS12×3×5/16	8.17	6.13	225	338	178	267
×1/4	6.63	4.97	183	274	144	216
×3/16	5.02	3.76	138	208	109	164
HSS12×2×5/16	7.59	5.69	209	314	165	248
×1/4	6.17	4.63	170	255	134	201
×3/16	4.67	3.50	129	193	102	152
HSS10×8×5/8	18.7	14.0	515	774	406	609
×1/2	15.3	11.5	421	633	334	500
×3/8	11.8	8.85	325	489	257	385
×5/16	9.92	7.44	273	411	216	324
×1/4	8.03	6.02	221	332	175	262
×3/16	6.06	4.55	167	251	132	198
HSS10×6×5/8	16.4	12.3	452	679	357	535
×1/2	13.5	10.1	372	559	293	439
×3/8	10.4	7.80	286	431	226	339
×5/16	8.76	6.57	241	363	191	286
×1/4	7.10	5.33	196	294	155	232
×3/16	5.37	4.03	148	222	117	175
HSS10×5×3/8	9.67	7.25	266	400	210	315
×5/16	8.17	6.13	225	338	178	267
×1/4	6.63	4.97	183	274	144	216
×3/16	5.02	3.76	138	208	109	164

Limit State	ASD	LRFD
Yielding	$\Omega_t = 1.67$	$\phi_t = 0.90$
Rupture	$\Omega_t = 2.00$	$\phi_t = 0.75$

Note: Tensile rupture on the effective net area will control over tensile yielding on the gross area unless the tension member is selected so that an end connection can be configured with $A_e \geq 0.952A_g$.

HSS10-HSS9

Table 5-4 (continued)
Available Strength in Axial Tension
Rectangular HSS

F_y = 46 ksi
F_u = 58 ksi

Shape	Gross Area, A_g	A_e = 0.75A_g	Yielding		Rupture	
			kips		kips	
			P_n/Ω_t	$\phi_t P_n$	P_n/Ω_t	$\phi_t P_n$
	in.²	in.²	ASD	LRFD	ASD	LRFD
HSS10×4×5/8	14.0	10.5	386	580	305	457
×1/2	11.6	8.70	320	480	252	378
×3/8	8.97	6.73	247	371	195	293
×5/16	7.59	5.69	209	314	165	248
×1/4	6.17	4.63	170	255	134	201
×3/16	4.67	3.50	129	193	102	152
×1/8	3.16	2.37	87.0	131	68.7	103
HSS10×3½×½	11.1	8.32	306	460	241	362
×3/8	8.62	6.47	237	357	188	281
×5/16	7.30	5.48	201	302	159	238
×1/4	5.93	4.45	163	246	129	194
×3/16	4.50	3.38	124	186	98.0	147
×1/8	3.04	2.28	83.7	126	66.1	99.2
HSS10×3×3/8	8.27	6.20	228	342	180	270
×5/16	7.01	5.26	193	290	153	229
×1/4	5.70	4.27	157	236	124	186
×3/16	4.32	3.24	119	179	94.0	141
×1/8	2.93	2.20	80.7	121	63.8	95.7
HSS10×2×3/8	7.58	5.69	209	314	165	248
×5/16	6.43	4.82	177	266	140	210
×1/4	5.24	3.93	144	217	114	171
×3/16	3.98	2.99	110	165	86.7	130
×1/8	2.70	2.03	74.4	112	58.9	88.3
HSS9×7×5/8	16.4	12.3	452	679	357	535
×1/2	13.5	10.1	372	559	293	439
×3/8	10.4	7.80	286	431	226	339
×5/16	8.76	6.57	241	363	191	286
×1/4	7.10	5.33	196	294	155	232
×3/16	5.37	4.03	148	222	117	175

Limit State	ASD	LRFD
Yielding	Ω_t = 1.67	ϕ_t = 0.90
Rupture	Ω_t = 2.00	ϕ_t = 0.75

Note: Tensile rupture on the effective net area will control over tensile yielding on the gross area unless the tension member is selected so that an end connection can be configured with $A_e \geq 0.952A_g$.

Table 5-4 (continued)
Available Strength in Axial Tension
Rectangular HSS

F_y = 46 ksi
F_u = 58 ksi

HSS9-HSS8

Shape	Gross Area, A_g	$A_e = 0.75A_g$	Yielding kips		Rupture kips	
			P_n/Ω_t	$\phi_t P_n$	P_n/Ω_t	$\phi_t P_n$
	in.²	in.²	ASD	LRFD	ASD	LRFD
HSS9×5×5/8	14.0	10.5	386	580	305	457
×1/2	11.6	8.70	320	480	252	378
×3/8	8.97	6.73	247	371	195	293
×5/16	7.59	5.69	209	314	165	248
×1/4	6.17	4.63	170	255	134	201
×3/16	4.67	3.50	129	193	102	152
HSS9×3×1/2	9.74	7.30	268	403	212	318
×3/8	7.58	5.69	209	314	165	248
×5/16	6.43	4.82	177	266	140	210
×1/4	5.24	3.93	144	217	114	171
×3/16	3.98	2.99	110	165	86.7	130
HSS8×6×5/8	14.0	10.5	386	580	305	457
×1/2	11.6	8.70	320	480	252	378
×3/8	8.97	6.73	247	371	195	293
×5/16	7.59	5.69	209	314	165	248
×1/4	6.17	4.63	170	255	134	201
×3/16	4.67	3.50	129	193	102	152
HSS8×4×5/8	11.7	8.78	322	484	255	382
×1/2	9.74	7.30	268	403	212	318
×3/8	7.58	5.69	209	314	165	248
×5/16	6.43	4.82	177	266	140	210
×1/4	5.24	3.93	144	217	114	171
×3/16	3.98	2.99	110	165	86.7	130
×1/8	2.70	2.03	74.4	112	58.9	88.3
HSS8×3×1/2	8.81	6.61	243	365	192	288
×3/8	6.88	5.16	190	285	150	224
×5/16	5.85	4.39	161	242	127	191
×1/4	4.77	3.58	131	197	104	156
×3/16	3.63	2.72	100	150	78.9	118
×1/8	2.46	1.85	67.8	102	53.7	80.5

Limit State	ASD	LRFD
Yielding	$\Omega_t = 1.67$	$\phi_t = 0.90$
Rupture	$\Omega_t = 2.00$	$\phi_t = 0.75$

Note: Tensile rupture on the effective net area will control over tensile yielding on the gross area unless the tension member is selected so that an end connection can be configured with $A_e \geq 0.952A_g$.

HSS8-HSS6

Table 5-4 (continued)
Available Strength in Axial Tension
Rectangular HSS

F_y = 46 ksi
F_u = 58 ksi

Shape	Gross Area, A_g	A_e = 0.75A_g	Yielding		Rupture	
			kips		kips	
			P_n/Ω_t	$\phi_t P_n$	P_n/Ω_t	$\phi_t P_n$
	in.²	in.²	ASD	LRFD	ASD	LRFD
HSS8×2×3/8	6.18	4.63	170	256	134	201
×5/16	5.26	3.94	145	218	114	171
×1/4	4.30	3.22	118	178	93.4	140
×3/16	3.28	2.46	90.3	136	71.3	107
×1/8	2.23	1.67	61.4	92.3	48.4	72.6
HSS7×5×1/2	9.74	7.30	268	403	212	318
×3/8	7.58	5.69	209	314	165	248
×5/16	6.43	4.82	177	266	140	210
×1/4	5.24	3.93	144	217	114	171
×3/16	3.98	2.99	110	165	86.7	130
×1/8	2.70	2.03	74.4	112	58.9	88.3
HSS7×4×1/2	8.81	6.61	243	365	192	288
×3/8	6.88	5.16	190	285	150	224
×5/16	5.85	4.39	161	242	127	191
×1/4	4.77	3.58	131	197	104	156
×3/16	3.63	2.72	100	150	78.9	118
×1/8	2.46	1.85	67.8	102	53.7	80.5
HSS7×3×1/2	7.88	5.91	217	326	171	257
×3/8	6.18	4.63	170	256	134	201
×5/16	5.26	3.94	145	218	114	171
×1/4	4.30	3.22	118	178	93.4	140
×3/16	3.28	2.46	90.3	136	71.3	107
×1/8	2.23	1.67	61.4	92.3	48.4	72.6
HSS7×2×1/4	3.84	2.88	106	159	83.5	125
×3/16	2.93	2.20	80.7	121	63.8	95.7
×1/8	2.00	1.50	55.1	82.8	43.5	65.3
HSS6×5×1/2	8.81	6.61	243	365	192	288
×3/8	6.88	5.16	190	285	150	224
×5/16	5.85	4.39	161	242	127	191
×1/4	4.77	3.58	131	197	104	156
×3/16	3.63	2.72	100	150	78.9	118
×1/8	2.46	1.85	67.8	102	53.7	80.5

Limit State	ASD	LRFD
Yielding	Ω_t = 1.67	ϕ_t = 0.90
Rupture	Ω_t = 2.00	ϕ_t = 0.75

Note: Tensile rupture on the effective net area will control over tensile yielding on the gross area unless the tension member is selected so that an end connection can be configured with $A_e \geq 0.952A_g$.

Table 5-4 (continued)
Available Strength in Axial Tension
Rectangular HSS

F_y = 46 ksi
F_u = 58 ksi

HSS6-HSS5

Shape	Gross Area, A_g	A_e = 0.75A_g	kips Yielding		Rupture kips	
			P_n/Ω_t	$\phi_t P_n$	P_n/Ω_t	$\phi_t P_n$
	in.²	in.²	ASD	LRFD	ASD	LRFD
HSS6×4×1/2	7.88	5.91	217	326	171	257
×3/8	6.18	4.63	170	256	134	201
×5/16	5.26	3.94	145	218	114	171
×1/4	4.30	3.22	118	178	93.4	140
×3/16	3.28	2.46	90.3	136	71.3	107
×1/8	2.23	1.67	61.4	92.3	48.4	72.6
HSS6×3×1/2	6.95	5.21	191	288	151	227
×3/8	5.48	4.11	151	227	119	179
×5/16	4.68	3.51	129	194	102	153
×1/4	3.84	2.88	106	159	83.5	125
×3/16	2.93	2.20	80.7	121	63.8	95.7
×1/8	2.00	1.50	55.1	82.8	43.5	65.3
HSS6×2×3/8	4.78	3.58	132	198	104	156
×5/16	4.10	3.08	113	170	89.3	134
×1/4	3.37	2.53	92.8	140	73.4	110
×3/16	2.58	1.94	71.1	107	56.3	84.4
×1/8	1.77	1.33	48.8	73.3	38.6	57.9
HSS5×4×1/2	6.95	5.21	191	288	151	227
×3/8	5.48	4.11	151	227	119	179
×5/16	4.68	3.51	129	194	102	153
×1/4	3.84	2.88	106	159	83.5	125
×3/16	2.93	2.20	80.7	121	63.8	95.7
×1/8	2.00	1.50	55.1	82.8	43.5	65.3
HSS5×3×1/2	6.02	4.51	166	249	131	196
×3/8	4.78	3.58	132	198	104	156
×5/16	4.10	3.08	113	170	89.3	134
×1/4	3.37	2.53	92.8	140	73.4	110
×3/16	2.58	1.94	71.1	107	56.3	84.4
×1/8	1.77	1.33	48.8	73.3	38.6	57.9
HSS5×2 1/2×1/4	3.14	2.36	86.5	130	68.4	103
×3/16	2.41	1.81	66.4	99.8	52.5	78.7
×1/8	1.65	1.24	45.4	68.3	36.0	53.9

Limit State	ASD	LRFD
Yielding	Ω_t = 1.67	ϕ_t = 0.90
Rupture	Ω_t = 2.00	ϕ_t = 0.75

Note: Tensile rupture on the effective net area will control over tensile yielding on the gross area unless the tension member is selected so that an end connection can be configured with $A_e \geq 0.952A_g$.

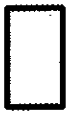

HSS5-HSS3½

Table 5-4 (continued)
Available Strength in Axial Tension
Rectangular HSS

F_y = 46 ksi
F_u = 58 ksi

Shape	Gross Area, A_g	A_e = 0.75A_g	Yielding		Rupture	
			kips		kips	
			P_n/Ω_t	$\phi_t P_n$	P_n/Ω_t	$\phi_t P_n$
	in.²	in.²	ASD	LRFD	ASD	LRFD
HSS5×2×3/8	4.09	3.07	113	169	89.0	134
×5/16	3.52	2.64	97.0	146	76.6	115
×1/4	2.91	2.18	80.2	120	63.2	94.8
×3/16	2.24	1.68	61.7	92.7	48.7	73.1
×1/8	1.54	1.16	42.4	63.8	33.6	50.5
HSS4×3×3/8	4.09	3.07	113	169	89.0	134
×5/16	3.52	2.64	97.0	146	76.6	115
×1/4	2.91	2.18	80.2	120	63.2	94.8
×3/16	2.24	1.68	61.7	92.7	48.7	73.1
×1/8	1.54	1.16	42.4	63.8	33.6	50.5
HSS4×2½×3/8	3.74	2.81	103	155	81.5	122
×5/16	3.23	2.42	89.0	134	70.2	105
×1/4	2.67	2.00	73.5	111	58.0	87.0
×3/16	2.06	1.55	56.7	85.3	45.0	67.4
×1/8	1.42	1.07	39.1	58.8	31.0	46.5
HSS4×2×3/8	3.39	2.54	93.4	140	73.7	110
×5/16	2.94	2.21	81.0	122	64.1	96.1
×1/4	2.44	1.83	67.2	101	53.1	79.6
×3/16	1.89	1.42	52.1	78.2	41.2	61.8
×1/8	1.30	0.975	35.8	53.8	28.3	42.4
HSS3½×2½×3/8	3.39	2.54	93.4	140	73.7	110
×5/16	2.94	2.21	81.0	122	64.1	96.1
×1/4	2.44	1.83	67.2	101	53.1	79.6
×3/16	1.89	1.42	52.1	78.2	41.2	61.8
×1/8	1.30	0.975	35.8	53.8	28.3	42.4
HSS3½×2×¼	2.21	1.66	60.9	91.5	48.1	72.2
×3/16	1.71	1.28	47.1	70.8	37.1	55.7
×1/8	1.19	0.892	32.8	49.3	25.9	38.8

Limit State	ASD	LRFD
Yielding	Ω_t = 1.67	ϕ_t = 0.90
Rupture	Ω_t = 2.00	ϕ_t = 0.75

Note: Tensile rupture on the effective net area will control over tensile yielding on the gross area unless the tension member is selected so that an end connection can be configured with $A_e \geq 0.952A_g$.

Table 5-4 (continued)
Available Strength in Axial Tension
Rectangular HSS

F_y = 46 ksi
F_u = 58 ksi

HSS3-HSS2

Shape	Gross Area, A_g	A_e = 0.75A_g	Yielding		Rupture	
			kips		kips	
			P_n/Ω_t	$\phi_t P_n$	P_n/Ω_t	$\phi_t P_n$
	in.²	in.²	ASD	LRFD	ASD	LRFD
HSS3×2½×5/16	2.64	1.98	72.7	109	57.4	86.1
×¼	2.21	1.66	60.9	91.5	48.1	72.2
×3/16	1.71	1.28	47.1	70.8	37.1	55.7
×⅛	1.19	0.892	32.8	49.3	25.9	38.8
HSS3×2×5/16	2.35	1.76	64.7	97.3	51.0	76.6
×¼	1.97	1.48	54.3	81.6	42.9	64.4
×3/16	1.54	1.16	42.4	63.8	33.6	50.5
×⅛	1.07	0.803	29.5	44.3	23.3	34.9
HSS3×1½×¼	1.74	1.30	47.9	72.0	37.7	56.6
×3/16	1.37	1.03	37.7	56.7	29.9	44.8
×⅛	0.956	0.717	26.3	39.6	20.8	31.2
HSS3×1×3/16	1.19	0.892	32.8	49.3	25.9	38.8
×⅛	0.840	0.630	23.1	34.8	18.3	27.4
HSS2½×2×¼	1.74	1.30	47.9	72.0	37.7	56.6
×3/16	1.37	1.03	37.7	56.7	29.9	44.8
×⅛	0.956	0.717	26.3	39.6	20.8	31.2
HSS2½×1½×¼	1.51	1.13	41.6	62.5	32.8	49.2
×3/16	1.19	0.892	32.8	49.3	25.9	38.8
×⅛	0.840	0.630	23.1	34.8	18.3	27.4
HSS2½×1×3/16	1.02	0.765	28.1	42.2	22.2	33.3
×⅛	0.724	0.543	19.9	30.0	15.7	23.6
HSS2¼×2×3/16	1.28	0.960	35.3	53.0	27.8	41.8
×⅛	0.898	0.674	24.7	37.2	19.5	29.3
HSS2×1½×3/16	1.02	0.765	28.1	42.2	22.2	33.3
×⅛	0.724	0.543	19.9	30.0	15.7	23.6
HSS2×1×3/16	0.845	0.634	23.3	35.0	18.4	27.6
×⅛	0.608	0.456	16.7	25.2	13.2	19.8

Limit State	ASD	LRFD
Yielding	Ω_t = 1.67	ϕ_t = 0.90
Rupture	Ω_t = 2.00	ϕ_t = 0.75

Note: Tensile rupture on the effective net area will control over tensile yielding on the gross area unless the tension member is selected so that an end connection can be configured with $A_e \geq 0.952A_g$.

HSS16-HSS8

Table 5-5
Available Strength in Axial Tension
Square HSS

F_y = 46 ksi
F_u = 58 ksi

Shape	Gross Area, A_g	A_e = 0.75A_g	Yielding kips		Rupture kips	
			P_n/Ω_t	$\phi_t P_n$	P_n/Ω_t	$\phi_t P_n$
	in.²	in.²	ASD	LRFD	ASD	LRFD
HSS16×16×5/8	35.0	26.3	964	1450	763	1140
×1/2	28.3	21.2	780	1170	615	922
×3/8	21.5	16.1	592	890	467	700
×5/16	18.1	13.6	499	749	394	592
HSS14×14×5/8	30.3	22.7	835	1250	658	987
×1/2	24.6	18.5	678	1020	537	805
×3/8	18.7	14.0	515	774	406	609
×5/16	15.7	11.8	432	650	342	513
HSS12×12×5/8	25.7	19.3	708	1060	560	840
×1/2	20.9	15.7	576	865	455	683
×3/8	16.0	12.0	441	662	348	522
×5/16	13.4	10.1	369	555	293	439
×1/4	10.8	8.10	297	447	235	352
×3/16	8.15	6.11	224	337	177	266
HSS10×10×5/8	21.0	15.8	578	869	458	687
×1/2	17.2	12.9	474	712	374	561
×3/8	13.2	9.90	364	546	287	431
×5/16	11.1	8.32	306	460	241	362
×1/4	8.96	6.72	247	371	195	292
×3/16	6.76	5.07	186	280	147	221
HSS9×9×5/8	18.7	14.0	515	774	406	609
×1/2	15.3	11.5	421	633	334	500
×3/8	11.8	8.85	325	489	257	385
×5/16	9.92	7.44	273	411	216	324
×1/4	8.03	6.02	221	332	175	262
×3/16	6.06	4.55	167	251	132	198
×1/8	4.09	3.07	113	169	89.0	134
HSS8×8×5/8	16.4	12.3	452	679	357	535
×1/2	13.5	10.1	372	559	293	439
×3/8	10.4	7.80	286	431	226	339
×5/16	8.76	6.57	241	363	191	286
×1/4	7.10	5.33	196	294	155	232
×3/16	5.37	4.03	148	222	117	175
×1/8	3.62	2.71	99.7	150	78.6	118

Limit State	ASD	LRFD
Yielding	Ω_t = 1.67	ϕ_t = 0.90
Rupture	Ω_t = 2.00	ϕ_t = 0.75

Note: Tensile rupture on the effective net area will control over tensile yielding on the gross area unless the tension member is selected so that an end connection can be configured with $A_e \geq 0.952A_g$.

Table 5-5 (continued)
Available Strength in Axial Tension
Square HSS

F_y = 46 ksi
F_u = 58 ksi

HSS7-HSS4½

Shape	Gross Area, A_g	A_e = 0.75A_g	Yielding kips		Rupture kips	
			P_n/Ω_t	$\phi_t P_n$	P_n/Ω_t	$\phi_t P_n$
	in.²	in.²	ASD	LRFD	ASD	LRFD
HSS7×7×5/8	14.0	10.5	386	580	305	457
×1/2	11.6	8.70	320	480	252	378
×3/8	8.97	6.73	247	371	195	293
×5/16	7.59	5.69	209	314	165	248
×1/4	6.17	4.63	170	255	134	201
×3/16	4.67	3.50	129	193	102	152
×1/8	3.16	2.37	87.0	131	68.7	103
HSS6×6×5/8	11.7	8.78	322	484	255	382
×1/2	9.74	7.30	268	403	212	318
×3/8	7.58	5.69	209	314	165	248
×5/16	6.43	4.82	177	266	140	210
×1/4	5.24	3.93	144	217	114	171
×3/16	3.98	2.99	110	165	86.7	130
×1/8	2.70	2.03	74.4	112	58.9	88.3
HSS5½×5½×3/8	6.88	5.16	190	285	150	224
×5/16	5.85	4.39	161	242	127	191
×1/4	4.77	3.58	131	197	104	156
×3/16	3.63	2.72	100	150	78.9	118
×1/8	2.46	1.85	67.8	102	53.7	80.5
HSS5×5×1/2	7.88	5.91	217	326	171	257
×3/8	6.18	4.63	170	256	134	201
×5/16	5.26	3.94	145	218	114	171
×1/4	4.30	3.22	118	178	93.4	140
×3/16	3.28	2.46	90.3	136	71.3	107
×1/8	2.23	1.67	61.4	92.3	48.4	72.6
HSS4½×4½×1/2	6.95	5.21	191	288	151	227
×3/8	5.48	4.11	151	227	119	179
×5/16	4.68	3.51	129	194	102	153
×1/4	3.84	2.88	106	159	83.5	125
×3/16	2.93	2.20	80.7	121	63.8	95.7
×1/8	2.00	1.50	55.1	82.8	43.5	65.3

Limit State	ASD	LRFD
Yielding	Ω_t = 1.67	ϕ_t = 0.90
Rupture	Ω_t = 2.00	ϕ_t = 0.75

Note: Tensile rupture on the effective net area will control over tensile yielding on the gross area unless the tension member is selected so that an end connection can be configured with $A_e \geq 0.952A_g$.

HSS4-HSS2

Table 5-5 (continued)
Available Strength in Axial Tension
Square HSS

F_y = 46 ksi
F_u = 58 ksi

Shape	Gross Area, A_g	$A_e = 0.75A_g$	Yielding kips		Rupture kips	
			P_n/Ω_t	$\phi_t P_n$	P_n/Ω_t	$\phi_t P_n$
	in.²	in.²	ASD	LRFD	ASD	LRFD
HSS4×4×1/2	6.02	4.51	166	249	131	196
×3/8	4.78	3.58	132	198	104	156
×5/16	4.10	3.08	113	170	89.3	134
×1/4	3.37	2.53	92.8	140	73.4	110
×3/16	2.58	1.94	71.1	107	56.3	84.4
×1/8	1.77	1.33	48.8	73.3	38.6	57.9
HSS3 1/2×3 1/2×3/8	4.09	3.07	113	169	89.0	134
×5/16	3.52	2.64	97.0	146	76.6	115
×1/4	2.91	2.18	80.2	120	63.2	94.8
×3/16	2.24	1.68	61.7	92.7	48.7	73.1
×1/8	1.54	1.16	42.4	63.8	33.6	50.5
HSS3×3×3/8	3.39	2.54	93.4	140	73.7	110
×5/16	2.94	2.21	81.0	122	64.1	96.1
×1/4	2.44	1.83	67.2	101	53.1	79.6
×3/16	1.89	1.42	52.1	78.2	41.2	61.8
×1/8	1.30	0.975	35.8	53.8	28.3	42.4
HSS2 1/2×2 1/2×5/16	2.35	1.76	64.7	97.3	51.0	76.6
×1/4	1.97	1.48	54.3	81.6	42.9	64.4
×3/16	1.54	1.16	42.4	63.8	33.6	50.5
×1/8	1.07	0.803	29.5	44.3	23.3	34.9
HSS2 1/4×2 1/4×1/4	1.74	1.30	47.9	72.0	37.7	56.6
×3/16	1.37	1.03	37.7	56.7	29.9	44.8
×1/8	0.956	0.717	26.3	39.6	20.8	31.2
HSS2×2×1/4	1.51	1.13	41.6	62.5	32.8	49.2
×3/16	1.19	0.892	32.8	49.3	25.9	38.8
×1/8	0.840	0.630	23.1	34.8	18.3	27.4

Limit State	ASD	LRFD
Yielding	$\Omega_t = 1.67$	$\phi_t = 0.90$
Rupture	$\Omega_t = 2.00$	$\phi_t = 0.75$

Note: Tensile rupture on the effective net area will control over tensile yielding on the gross area unless the tension member is selected so that an end connection can be configured with $A_e \geq 0.952A_g$.

Table 5-6

Available Strength in Axial Tension

Round HSS

F_y = 42 ksi
F_u = 58 ksi

HSS20-HSS10

Shape	Gross Area, A_g	A_e = 0.75A_g	Yielding		Rupture	
			kips		kips	
			P_n/Ω_t	$\phi_t P_n$	P_n/Ω_t	$\phi_t P_n$
	in.²	in.²	ASD	LRFD	ASD	LRFD
HSS20×0.375	21.5	16.1	541	813	467	700
HSS18×0.500	25.6	19.2	644	968	557	835
×0.375	19.4	14.6	488	733	423	635
HSS16×0.625	28.1	21.1	707	1060	612	918
×0.500	22.7	17.0	571	858	493	740
×0.438	19.9	14.9	500	752	432	648
×0.375	17.2	12.9	433	650	374	561
×0.312	14.4	10.8	362	544	313	470
×0.250	11.5	8.63	289	435	250	375
HSS14×0.625	24.5	18.4	616	926	534	800
×0.500	19.8	14.9	498	748	432	648
×0.375	15.0	11.3	377	567	328	492
×0.312	12.5	9.38	314	473	272	408
×0.250	10.1	7.58	254	382	220	330
HSS12.750×0.500	17.9	13.4	450	677	389	583
×0.375	13.6	10.2	342	514	296	444
×0.250	9.16	6.87	230	346	199	299
HSS10.750×0.500	15.0	11.3	377	567	328	492
×0.375	11.4	8.55	287	431	248	372
×0.250	7.70	5.78	194	291	168	251
HSS10×0.625	17.2	12.9	433	650	374	561
×0.500	13.9	10.4	350	525	302	452
×0.375	10.6	7.95	267	401	231	346
×0.312	8.88	6.66	223	336	193	290
×0.250	7.15	5.36	180	270	155	233
×0.188	5.37	4.03	135	203	117	175

Limit State	ASD	LRFD
Yielding	Ω_t = 1.67	ϕ_t = 0.90
Rupture	Ω_t = 2.00	ϕ_t = 0.75

Note: Tensile rupture on the effective net area will control over tensile yielding on the gross area unless the tension member is selected so that an end connection can be configured with $A_e \geq 0.869A_g$.

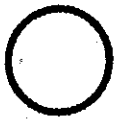

HSS9.625-
HSS6.875

Table 5-6 (continued)
Available Strength in Axial Tension
Round HSS

F_y = 42 ksi
F_u = 58 ksi

Shape	Gross Area, A_g	A_e = 0.75A_g	Yielding		Rupture	
			kips		kips	
			P_n/Ω_t	$\phi_t P_n$	P_n/Ω_t	$\phi_t P_n$
	in.²	in.²	ASD	LRFD	ASD	LRFD
HSS9.625×0.500	13.4	10.1	337	507	293	439
×0.375	10.2	7.65	257	386	222	333
×0.312	8.53	6.40	215	322	186	278
×0.250	6.87	5.15	173	260	149	224
×0.188	5.17	3.88	130	195	113	169
HSS8.625×0.625	14.7	11.0	370	556	319	479
×0.500	11.9	8.92	299	450	259	388
×0.375	9.07	6.80	228	343	197	296
×0.322	7.85	5.89	197	297	171	256
×0.250	6.14	4.60	154	232	133	200
×0.188	4.62	3.47	116	175	101	151
HSS7.625×0.375	7.98	5.99	201	302	174	261
×0.328	7.01	5.26	176	265	153	229
HSS7.500×0.500	10.3	7.73	259	389	224	336
×0.375	7.84	5.88	197	296	171	256
×0.312	6.59	4.94	166	249	143	215
×0.250	5.32	3.99	134	201	116	174
×0.188	4.00	3.00	101	151	87.0	131
HSS7×0.500	9.55	7.16	240	361	208	311
×0.375	7.29	5.47	183	276	159	238
×0.312	6.13	4.60	154	232	133	200
×0.250	4.95	3.71	124	187	108	161
×0.188	3.73	2.80	93.8	141	81.2	122
×0.125	2.51	1.88	63.1	94.9	54.5	81.8
HSS6.875×0.500	9.36	7.02	235	354	204	305
×0.375	7.16	5.37	180	271	156	234
×0.312	6.02	4.51	151	228	131	196
×0.250	4.86	3.64	122	184	106	158
×0.188	3.66	2.75	92.0	138	79.8	120

Limit State	ASD	LRFD
Yielding	Ω_t = 1.67	ϕ_t = 0.90
Rupture	Ω_t = 2.00	ϕ_t = 0.75

Note: Tensile rupture on the effective net area will control over tensile yielding on the gross area unless the tension member is selected so that an end connection can be configured with $A_e \geq 0.869A_g$.

F_y = 42 ksi
F_u = 58 ksi

Table 5-6 (continued)
Available Strength in Axial Tension
Round HSS

HSS6.625-HSS5

Shape	Gross Area, A_g	A_e = 0.75A_g	Yielding, kips		Rupture, kips	
			P_n/Ω_t	$\phi_t P_n$	P_n/Ω_t	$\phi_t P_n$
	in.²	in.²	ASD	LRFD	ASD	LRFD
HSS6.625×0.500	9.00	6.75	226	340	196	294
×0.432	7.86	5.90	198	297	171	257
×0.375	6.88	5.16	173	260	150	224
×0.312	5.79	4.34	146	219	126	189
×0.280	5.20	3.90	131	197	113	170
×0.250	4.68	3.51	118	177	102	153
×0.188	3.53	2.65	88.8	133	76.9	115
×0.125	2.37	1.78	59.6	89.6	51.6	77.4
HSS6.000×0.500	8.09	6.07	203	306	176	264
×0.375	6.20	4.65	156	234	135	202
×0.312	5.22	3.92	131	197	114	171
×0.280	4.69	3.52	118	177	102	153
×0.250	4.22	3.17	106	160	91.9	138
×0.188	3.18	2.39	80.0	120	69.3	104
×0.125	2.14	1.61	53.8	80.9	46.7	70.0
HSS5.563×0.500	7.45	5.59	187	282	162	243
×0.375	5.72	4.29	144	216	124	187
×0.258	4.01	3.01	101	152	87.3	131
×0.188	2.95	2.21	74.2	112	64.1	96.1
×0.134	2.12	1.59	53.3	80.1	46.1	69.2
HSS5.500×0.500	7.36	5.52	185	278	160	240
×0.375	5.65	4.24	142	214	123	184
×0.258	3.97	2.98	99.8	150	86.4	130
HSS5×0.500	6.62	4.97	166	250	144	216
×0.375	5.10	3.82	128	193	111	166
×0.312	4.30	3.22	108	163	93.4	140
×0.258	3.59	2.69	90.3	136	78.0	117
×0.250	3.49	2.62	87.8	132	76.0	114
×0.188	2.64	1.98	66.4	99.8	57.4	86.1
×0.125	1.78	1.34	44.8	67.3	38.9	58.3

Limit State	ASD	LRFD
Yielding	Ω_t = 1.67	ϕ_t = 0.90
Rupture	Ω_t = 2.00	ϕ_t = 0.75

Note: Tensile rupture on the effective net area will control over tensile yielding on the gross area unless the tension member is selected so that an end connection can be configured with $A_e \geq 0.869A_g$.

HSS4.500-
HSS2.500

Table 5-6 (continued)
Available Strength in Axial Tension
Round HSS

$F_y = 42$ ksi
$F_u = 58$ ksi

Shape	Gross Area, A_g	$A_e = 0.75A_g$	Yielding kips		Rupture kips	
			P_n/Ω_t	$\phi_t P_n$	P_n/Ω_t	$\phi_t P_n$
	in.^{2}	in.^{2}	ASD	LRFD	ASD	LRFD
HSS4.500×0.375	4.55	3.41	114	172	98.9	148
×0.337	4.12	3.09	104	156	89.6	134
×0.237	2.96	2.22	74.4	112	64.4	96.6
×0.188	2.36	1.77	59.4	89.2	51.3	77.0
×0.125	1.60	1.20	40.2	60.5	34.8	52.2
HSS4×0.313	3.39	2.54	85.3	128	73.7	110
×0.250	2.76	2.07	69.4	104	60.0	90.0
×0.237	2.61	1.96	65.6	98.7	56.8	85.3
×0.226	2.50	1.88	62.9	94.5	54.5	81.8
×0.220	2.44	1.83	61.4	92.2	53.1	79.6
×0.188	2.09	1.57	52.6	79.0	45.5	68.3
×0.125	1.42	1.07	35.7	53.7	31.0	46.5
HSS3.500×0.313	2.93	2.20	73.7	111	63.8	95.7
×0.300	2.82	2.11	70.9	107	61.2	91.8
×0.250	2.39	1.79	60.1	90.3	51.9	77.9
×0.216	2.08	1.56	52.3	78.6	45.2	67.9
×0.203	1.97	1.48	49.5	74.5	42.9	64.4
×0.188	1.82	1.36	45.8	68.8	39.4	59.2
×0.125	1.23	0.923	30.9	46.5	26.8	40.2
HSS3×0.250	2.03	1.52	51.1	76.7	44.1	66.1
×0.216	1.77	1.33	44.5	66.9	38.6	57.9
×0.203	1.67	1.25	42.0	63.1	36.3	54.4
×0.188	1.54	1.16	38.7	58.2	33.6	50.5
×0.152	1.27	0.953	31.9	48.0	27.6	41.5
×0.134	1.12	0.840	28.2	42.3	24.4	36.5
×0.125	1.05	0.788	26.4	39.7	22.9	34.3
HSS2.875×0.250	1.93	1.45	48.5	73.0	42.1	63.1
×0.203	1.59	1.19	40.0	60.1	34.5	51.8
×0.188	1.48	1.11	37.2	55.9	32.2	48.3
×0.125	1.01	0.758	25.4	38.2	22.0	33.0
HSS2.500×0.250	1.66	1.25	41.7	62.7	36.3	54.4
×0.188	1.27	0.953	31.9	48.0	27.6	41.5
×0.125	0.869	0.652	21.9	32.8	18.9	28.4

Limit State	ASD	LRFD
Yielding	$\Omega_t = 1.67$	$\phi_t = 0.90$
Rupture	$\Omega_t = 2.00$	$\phi_t = 0.75$

Note: Tensile rupture on the effective net area will control over tensile yielding on the gross area unless the tension member is selected so that an end connection can be configured with $A_e \geq 0.869A_g$.

Table 5-6 (continued)
Available Strength in Axial Tension
Round HSS

F_y = 42 ksi
F_u = 58 ksi

HSS2.375-
HSS1.660

Shape	Gross Area, A_g	A_e = 0.75A_g	Yielding kips		Rupture kips	
			P_n/Ω_t	$\phi_t P_n$	P_n/Ω_t	$\phi_t P_n$
	in.²	in.²	ASD	LRFD	ASD	LRFD
HSS2.375×0.250	1.57	1.18	39.5	59.3	34.2	51.3
×0.218	1.39	1.04	35.0	52.5	30.2	45.2
×0.188	1.20	0.900	30.2	45.4	26.1	39.1
×0.154	1.00	0.750	25.1	37.8	21.8	32.6
×0.125	0.823	0.617	20.7	31.1	17.9	26.8
HSS1.900×0.188	0.943	0.707	23.7	35.6	20.5	30.8
×0.145	0.749	0.562	18.8	28.3	16.3	24.4
×0.120	0.624	0.468	15.7	23.6	13.6	20.4
HSS1.660×0.140	0.625	0.469	15.7	23.6	13.6	20.4

Limit State	ASD	LRFD
Yielding	Ω_t = 1.67	ϕ_t = 0.90
Rupture	Ω_t = 2.00	ϕ_t = 0.75

Note: Tensile rupture on the effective net area will control over tensile yielding on the gross area unless the tension member is selected so that an end connection can be configured with $A_e \geq 0.869A_g$.

PIPE12-
PIPE1½

Table 5-7
Available Strength in Axial Tension
Pipe

F_y = 35 ksi
F_u = 60 ksi

Shape	Gross Area, A_g	A_e = 0.75A_g	Yielding		Rupture	
			kips		kips	
			P_n/Ω_t	$\phi_t P_n$	P_n/Ω_t	$\phi_t P_n$
	in.²	in.²	ASD	LRFD	ASD	LRFD
Pipe 12 X-Strong	17.5	13.1	367	551	393	590
Std	13.7	10.3	287	432	309	464
Pipe 10 X-Strong	15.1	11.3	316	476	339	509
Std	11.5	8.63	241	362	259	388
Pipe 8 XX-Strong	20.0	15.0	419	630	450	675
X-Strong	11.9	8.93	249	375	268	402
Std	7.85	5.89	165	247	177	265
Pipe 6 XX-Strong	14.7	11.0	308	463	330	495
X-Strong	7.83	5.87	164	247	176	264
Std	5.20	3.90	109	164	117	176
Pipe 5 XX-Strong	10.7	8.03	224	337	241	361
X-Strong	5.73	4.30	120	180	129	194
Std	4.01	3.01	84.0	126	90.3	135
Pipe 4 XX-Strong	7.66	5.75	161	241	173	259
X-Strong	4.14	3.11	86.8	130	93.3	140
Std	2.96	2.22	62.0	93.2	66.6	99.9
Pipe 3½ X-Strong	3.43	2.57	71.9	108	77.1	116
Std	2.50	1.88	52.4	78.8	56.4	84.6
Pipe 3 XX-Strong	5.17	3.88	108	163	116	175
X-Strong	2.83	2.12	59.3	89.1	63.6	95.4
Std	2.07	1.55	43.4	65.2	46.5	69.8
Pipe 2½ XX-Strong	3.83	2.87	80.3	121	86.1	129
X-Strong	2.10	1.58	44.0	66.2	47.4	71.1
Std	1.61	1.21	33.7	50.7	36.3	54.5
Pipe 2 XX-Strong	2.51	1.88	52.6	79.1	56.4	84.6
X-Strong	1.40	1.05	29.3	44.1	31.5	47.3
Std	1.02	0.765	21.4	32.1	23.0	34.4
Pipe 1½ X-Strong	1.00	0.750	21.0	31.5	22.5	33.8
Std	0.749	0.562	15.7	23.6	16.9	25.3

Limit State	ASD	LRFD
Yielding	Ω_t = 1.67	ϕ_t = 0.90
Rupture	Ω_t = 2.00	ϕ_t = 0.75

Note: Tensile rupture on the effective net area will control over tensile yielding on the gross area unless the tension member is selected so that an end connection can be configured with $A_e \geq 0.700A_g$.

F_y = 35 ksi
F_u = 60 ksi

Table 5-7 (continued)
Available Strength in Axial Tension
Pipe

PIPE1¼-
PIPE½

Shape	Gross Area, A_g	A_e = 0.75A_g	Yielding		Rupture	
			kips		kips	
			P_n/Ω_t	$\phi_t P_n$	P_n/Ω_t	$\phi_t P_n$
	in.²	in.²	ASD	LRFD	ASD	LRFD
Pipe 1¼ X-Strong	0.837	0.628	17.5	26.4	18.8	28.3
Std	0.625	0.469	13.1	19.7	14.1	21.1
Pipe 1 X-Strong	0.602	0.452	12.6	19.0	13.6	20.3
Std	0.469	0.352	9.83	14.8	10.6	15.8
Pipe ¾ X-Strong	0.407	0.305	8.53	12.8	9.15	13.7
Std	0.312	0.234	6.54	9.83	7.02	10.5
Pipe ½ X-Strong	0.303	0.227	6.35	9.54	6.81	10.2
Std	0.234	0.176	4.90	7.37	5.28	7.92

Limit State	ASD	LRFD
Yielding	Ω_t = 1.67	ϕ_t = 0.90
Rupture	Ω_t = 2.00	ϕ_t = 0.75

Note: Tensile rupture on the effective net area will control over tensile yielding on the gross area unless the tension member is selected so that an end connection can be configured with $A_e \geq 0.700A_g$.

2L8-2L6

Table 5-8
Available Strength in Axial Tension
Double Angles

F_y = 36 ksi
F_u = 58 ksi

Shape	Gross Area, A_g	A_e = 0.75A_g	Yielding		Rupture	
			kips		kips	
			P_n/Ω_t	$\phi_t P_n$	P_n/Ω_t	$\phi_t P_n$
	in.²	in.²	ASD	LRFD	ASD	LRFD
2L8×8×1 1/8	33.6	25.2	724	1090	731	1100
×1	30.2	22.7	651	978	656	987
×7/8	26.6	20.0	573	862	580	870
×3/4	23.0	17.3	496	745	502	753
×5/8	19.4	14.6	418	629	423	635
×9/16	17.5	13.1	377	567	380	570
×1/2	15.7	11.8	338	509	342	513
2L8×6×1	26.2	19.7	565	849	571	857
×7/8	23.0	17.3	496	745	502	753
×3/4	20.0	15.0	431	648	435	653
×5/8	16.8	12.6	362	544	365	548
×9/16	15.2	11.4	328	492	331	496
×1/2	13.6	10.2	293	441	296	444
×7/16	12.0	9.00	259	389	261	392
2L8×4×1	22.2	16.7	479	719	484	726
×7/8	19.6	14.7	423	635	426	639
×3/4	17.0	12.8	366	551	371	557
×5/8	14.3	10.7	308	463	310	465
×9/16	13.0	9.75	280	421	283	424
×1/2	11.6	8.70	250	376	252	378
×7/16	10.2	7.65	220	330	222	333
2L7×4×3/4	15.5	11.6	334	502	336	505
×5/8	13.0	9.75	280	421	283	424
×1/2	10.5	7.88	226	340	229	343
×7/16	9.26	6.95	200	300	202	302
×3/8	8.00	6.00	172	259	174	261
2L6×6×1	22.0	16.5	474	713	479	718
×7/8	19.5	14.6	420	632	423	635
×3/4	16.9	12.7	364	548	368	552
×5/8	14.3	10.7	308	463	310	465
×9/16	12.9	9.68	278	418	281	421
×1/2	11.5	8.63	248	373	250	375
×7/16	10.2	7.65	220	330	222	333
×3/8	8.76	6.57	189	284	191	286
×5/16	7.34	5.51	158	238	160	240

Limit State	ASD	LRFD
Yielding	Ω_t = 1.67	ϕ_t = 0.90
Rupture	Ω_t = 2.00	ϕ_t = 0.75

Note: Tensile rupture on the effective net area will control over tensile yielding on the gross area unless the tension member is selected so that an end connection can be configured with $A_e \geq 0.745A_g$.

Table 5-8 (continued)
Available Strength in Axial Tension
Double Angles

$F_y = 36$ ksi
$F_u = 58$ ksi

2L6-2L5

Shape	Gross Area, A_g	$A_e = 0.75A_g$	Yielding kips		Rupture kips	
			P_n/Ω_t	$\phi_t P_n$	P_n/Ω_t	$\phi_t P_n$
	in.²	in.²	ASD	LRFD	ASD	LRFD
2L6×4×7/8	16.0	12.0	345	518	348	522
×3/4	13.9	10.4	300	450	302	452
×5/8	11.7	8.78	252	379	255	382
×9/16	10.6	7.95	229	343	231	346
×1/2	9.50	7.13	205	308	207	310
×7/16	8.36	6.27	180	271	182	273
×3/8	7.22	5.42	156	234	157	236
×5/16	6.06	4.55	131	196	132	198
2L6×3 1/2×1/2	9.00	6.75	194	292	196	294
×5/8	6.88	5.16	148	223	150	224
×5/16	5.78	4.34	125	187	126	189
2L5×5×7/8	16.0	12.0	345	518	348	522
×3/4	14.0	10.5	302	454	305	457
×5/8	11.8	8.85	254	382	257	385
×1/2	9.58	7.19	207	310	209	313
×7/16	8.44	6.33	182	273	184	275
×3/8	7.30	5.48	157	237	159	238
×5/16	6.14	4.61	132	199	134	201
2L5×3 1/2×3/4	11.7	8.78	252	379	255	382
×5/8	9.86	7.40	213	319	215	322
×1/2	8.00	6.00	172	259	174	261
×3/8	6.10	4.58	131	198	133	199
×5/16	5.12	3.84	110	166	111	167
×1/4	4.14	3.11	89.2	134	90.2	135
2L5×3×1/2	7.50	5.63	162	243	163	245
×7/16	6.62	4.97	143	214	144	216
×3/8	5.72	4.29	123	185	124	187
×5/16	4.82	3.62	104	156	105	157
×1/4	3.88	2.91	83.6	126	84.4	127

Limit State	ASD	LRFD
Yielding	$\Omega_t = 1.67$	$\phi_t = 0.90$
Rupture	$\Omega_t = 2.00$	$\phi_t = 0.75$

Note: Tensile rupture on the effective net area will control over tensile yielding on the gross area unless the tension member is selected so that an end connection can be configured with $A_e \geq 0.745A_g$.

2L4–2L3½

Table 5-8 (continued)
Available Strength in Axial Tension
Double Angles

F_y = 36 ksi
F_u = 58 ksi

Shape	Gross Area, A_g	A_e = 0.75A_g	Yielding, kips		Rupture, kips	
			P_n/Ω_t	$\phi_t P_n$	P_n/Ω_t	$\phi_t P_n$
	in.²	in.²	ASD	LRFD	ASD	LRFD
2L4×4×3/4	10.9	8.18	235	353	237	356
×5/8	9.22	6.92	199	299	201	301
×1/2	7.50	5.63	162	243	163	245
×7/16	6.60	4.95	142	214	144	215
×3/8	5.72	4.29	123	185	124	187
×5/16	4.80	3.60	103	156	104	157
×1/4	3.86	2.90	83.2	125	84.1	126
2L4×3½×1/2	7.00	5.25	151	227	152	228
×3/8	5.36	4.02	116	174	117	175
×5/16	4.50	3.38	97.0	146	98.0	147
×1/4	3.64	2.73	78.5	118	79.2	119
2L4×3×5/8	7.98	5.99	172	259	174	261
×1/2	6.50	4.88	140	211	142	212
×3/8	4.98	3.74	107	161	108	163
×5/16	4.18	3.14	90.1	135	91.1	137
×1/4	3.38	2.54	72.9	110	73.7	110
2L3½×3½×1/2	6.50	4.88	140	211	142	212
×7/16	5.78	4.34	125	187	126	189
×3/8	5.00	3.75	108	162	109	163
×5/16	4.20	3.15	90.5	136	91.4	137
×1/4	3.40	2.55	73.3	110	74.0	111
2L3½×3×1/2	6.04	4.53	130	196	131	197
×7/16	5.34	4.01	115	173	116	174
×3/8	4.64	3.48	100	150	101	151
×5/16	3.90	2.93	84.1	126	85.0	127
×1/4	3.16	2.37	68.1	102	68.7	103
2L3½×2½×1/2	5.54	4.16	119	179	121	181
×3/8	4.24	3.18	91.4	137	92.2	138
×5/16	3.58	2.69	77.2	116	78.0	117
×1/4	2.90	2.18	62.5	94.0	63.2	94.8

Limit State	ASD	LRFD
Yielding	Ω_t = 1.67	ϕ_t = 0.90
Rupture	Ω_t = 2.00	ϕ_t = 0.75

Note: Tensile rupture on the effective net area will control over tensile yielding on the gross area unless the tension member is selected so that an end connection can be configured with $A_e \geq 0.745A_g$.

Table 5-8 (continued)

Available Strength in Axial Tension

Double Angles

F_y = 36 ksi
F_u = 58 ksi

2L3-2L2

Shape	Gross Area, A_g	A_e = 0.75A_g	Yielding		Rupture	
			kips		kips	
			P_n/Ω_t	$\phi_t P_n$	P_n/Ω_t	$\phi_t P_n$
	in.²	in.²	ASD	LRFD	ASD	LRFD
2L3×3×1/2	5.52	4.14	119	179	120	180
×7/16	4.86	3.65	105	157	106	159
×3/8	4.22	3.17	91.0	137	91.9	138
×5/16	3.56	2.67	76.7	115	77.4	116
×1/4	2.88	2.16	62.1	93.3	62.6	94.0
×3/16	2.18	1.64	47.0	70.6	47.6	71.3
2L3×2 1/2×1/2	5.00	3.75	108	162	109	163
×7/16	4.44	3.33	95.7	144	96.6	145
×3/8	3.86	2.90	83.2	125	84.1	126
×5/16	3.26	2.45	70.3	106	71.1	107
×1/4	2.64	1.98	56.9	85.5	57.4	86.1
×3/16	2.00	1.50	43.1	64.8	43.5	65.3
2L3×2×1/2	4.52	3.39	97.4	146	98.3	147
×3/8	3.50	2.63	75.4	113	76.3	114
×5/16	2.96	2.22	63.8	95.9	64.4	96.6
×1/4	2.40	1.80	51.7	77.8	52.2	78.3
×3/16	1.83	1.37	39.4	59.3	39.7	59.6
2L2 1/2×2 1/2×1/2	4.52	3.39	97.4	146	98.3	147
×3/8	3.46	2.60	74.6	112	75.4	113
×5/16	2.92	2.19	62.9	94.6	63.5	95.3
×1/4	2.38	1.79	51.3	77.1	51.9	77.9
×3/16	1.80	1.35	38.8	58.3	39.2	58.7
2L2 1/2×2×3/8	3.10	2.33	66.8	100	67.6	101
×5/16	2.64	1.98	56.9	85.5	57.4	86.1
×1/4	2.14	1.61	46.1	69.3	46.7	70.0
×3/16	1.64	1.23	35.4	53.1	35.7	53.5
2L2 1/2×1 1/2×1/4	1.89	1.42	40.7	61.2	41.2	61.8
×3/16	1.45	1.09	31.3	47.0	31.6	47.4
2L2×2×3/8	2.74	2.06	59.1	88.8	59.7	89.6
×5/16	2.32	1.74	50.0	75.2	50.5	75.7
×1/4	1.89	1.42	40.7	61.2	41.2	61.8
×3/16	1.44	1.08	31.0	46.7	31.3	47.0
×1/8	0.982	0.737	21.2	31.8	21.4	32.1

Limit State	ASD	LRFD
Yielding	Ω_t = 1.67	ϕ_t = 0.90
Rupture	Ω_t = 2.00	ϕ_t = 0.75

Note: Tensile rupture on the effective net area will control over tensile yielding on the gross area unless the tension member is selected so that an end connection can be configured with $A_e \geq 0.745A_g$.

PART 6

DESIGN OF MEMBERS SUBJECT TO COMBINED FORCES

SCOPE 6–2
COMPACT, NONCOMPACT AND SLENDER-ELEMENT SECTIONS 6–2
MEMBERS SUBJECT TO COMBINED FLEXURE AND AXIAL COMPRESSION 6–2
MEMBERS SUBJECT TO COMBINED FLEXURE AND AXIAL TENSION 6–2
MEMBERS SUBJECT TO TORSION AND COMBINED TORSION, FLEXURE, SHEAR AND/OR AXIAL FORCE 6–2
MEMBERS WITH HOLES 6–2
COMPOSITE MEMBERS SUBJECT TO COMBINED FLEXURE AND AXIAL COMPRESSION 6–3
DESIGN TABLE DISCUSSION 6–3
PART 6 REFERENCES 6–6
STEEL BEAM-COLUMN SELECTION TABLES 6–7
Table 6-1. Combined Flexure and Axial Force, W-Shapes 6–7

SCOPE

The specification requirements and other design considerations summarized in this Part apply to the design of members subject to combined forces. For the design of members subject to axial tension only, see Part 5. For the design of members subject to axial compression only, see Part 4. For the design of members subject to uniaxial flexure only, see Part 3.

COMPACT, NONCOMPACT AND SLENDER-ELEMENT SECTIONS

Based upon the types of load transmitted by the member, the discussions of width-to-thickness ratios in Part 4 for compression members and Part 3 for flexural members apply to the design of members subject to combined forces. The values given in this Part already account for limitations due to width-to-thickness ratios.

MEMBERS SUBJECT TO COMBINED FLEXURE AND AXIAL COMPRESSION

The interaction of the combined effects of the required strengths (axial compression and bending moment) must satisfy the unity check as follows:

1. For doubly and singly symmetric members, per AISC *Specification* Section H1.1
2. For unsymmetric and other members, per AISC *Specification* Section H2

MEMBERS SUBJECT TO COMBINED FLEXURE AND AXIAL TENSION

The interaction of the combined effects of the required strengths (axial tension and bending moment) must satisfy the unity check as follows:

1. For doubly and singly symmetric members, per AISC *Specification* Section H1.2
2. For unsymmetric and other members, per AISC *Specification* Section H2

MEMBERS SUBJECT TO TORSION AND COMBINED TORSION, FLEXURE, SHEAR AND/OR AXIAL FORCE

The interaction of the combined effects of the required strengths (torsion, bending moment, shear force and/or axial force) must satisfy the requirements of AISC *Specification* Section H3.

See also AISC Design Guide 9, *Torsional Analysis of Structural Steel Members*.

MEMBERS WITH HOLES

AISC *Specification* Section F13 provides provisions for potential impact of holes in shapes proportioned on the basis of flexural strength of the gross section. Additionally, AISC *Specification* Section H4 provides provisions applicable to rupture of flanges with holes subject to tension under combined axial force and major axis flexure.

COMPOSITE MEMBERS SUBJECT TO COMBINED FLEXURE AND AXIAL COMPRESSION

For the design of composite members subject to combined flexure and axial compression, see AISC *Specification* Section I5.

DESIGN TABLE DISCUSSION

Table 6-1. W-Shapes in Combined Flexure and Axial Force

Steel W-shapes with $F_y = 50$ ksi (ASTM A992) and subject to combined axial force (tension or compression) and flexure may be checked for compliance with the provisions of Section H1.1 and H1.2 of the AISC *Specification* using values listed in Table 6-1 and the appropriate interaction equations provided in the following sections.

Values p, b_x, b_y, t_y and t_r presented in Table 6-1 are defined as follows.

	LRFD	ASD
Axial Compression	$p = \frac{1}{\phi_c P_n}$, (kips)$^{-1}$	$p = \frac{\Omega_c}{P_n}$, (kips)$^{-1}$
Strong Axis Bending	$b_x = \frac{8}{9\phi_b M_{nx}}$, (kip-ft)$^{-1}$	$b_x = \frac{8\Omega_b}{9M_{nx}}$, (kip-ft)$^{-1}$
Weak Axis Bending	$b_y = \frac{8}{9\phi_b M_{ny}}$, (kip-ft)$^{-1}$	$b_y = \frac{8\Omega_b}{9M_{ny}}$, (kip-ft)$^{-1}$
Tension Yielding	$t_y = \frac{1}{\phi_t F_y A_g}$, (kips)$^{-1}$	$t_y = \frac{\Omega_t}{F_y A_g}$, (kips)$^{-1}$
Tension Rupture	$t_r = \frac{1}{\phi_t F_u (0.75A_g)}$, (kips)$^{-1}$	$t_r = \frac{\Omega_t}{F_u (0.75A_g)}$, (kips)$^{-1}$

Combined Flexure and Compression

Equations H1-1a and H1-1b of the AISC *Specification* may be written as follows using the coefficients listed in Table 6-1 and defined above.

When $pP_r \geq 0.2$:

$$pP_r + b_x M_{rx} + b_y M_{ry} \leq 1.0 \quad (6\text{-}1)$$

When $pP_r < 0.2$:

$$\tfrac{1}{2}pP_r + \tfrac{9}{8}(b_x M_{rx} + b_y M_{ry}) \leq 1.0 \quad (6\text{-}2)$$

The designer may check acceptability of a given shape using the appropriate interaction equation from above. See Aminmansour (2000) for more information on this method, including an alternative approach for selection of a trial shape.

Combined Flexure and Tension

Equations H1-1a and H1-1b of the AISC *Specification* may be written as follows using the coefficients listed in Table 6-1 and defined above.

When $pP_r \geq 0.2$:

$$(t_y \text{ or } t_r)\, P_r + b_x M_{rx} + b_y M_{ry} \leq 1.0 \tag{6-3}$$

When $pP_r < 0.2$:

$$^1/_2(t_y \text{ or } t_r)\, P_r + {}^9/_8(b_x M_{rx} + b_y M_{ry}) \leq 1.0 \tag{6-4}$$

The larger value of t_y and t_r should be used in the above equations.

The designer may check acceptability of a given shape using the appropriate interaction equation from above along with variables t_r, t_y, b_x and b_y. See Aminmansour (2006) for more information on this method.

It is noted that the values for t_r listed in Table 6-1 are based on the assumption that $A_e = 0.75A_g$. See Part 5 for more information on this assumption. When $A_e > 0.75A_g$, the tabulated values for t_r are conservative. When $A_e < 0.75A_g$, t_r must be calculated based upon the actual value of A_e.

General Considerations for Use of Values Listed in Table 6-1

The following remarks are offered for consideration in use of the values listed in Table 6-1.

1. Values of p, b_x and b_y already account for section compactness and can be used directly.
2. Tabulated values of b_x assume that $C_b = 1.0$. A procedure for determining b_x when $C_b > 1.0$ follows.
3. Given that the limit state of lateral-torsional buckling does not apply to W-shapes bent about their weak axis, values of b_y are independent of unbraced length and C_b.
4. Values of b_x equally apply to combined flexure and compression as well as combined flexure and tension.
5. Smaller values of variable p for a given KL and smaller values of b_x for a given L_b indicate higher strength for the type of load in question. For example, a section with a smaller p at a certain KL is more effective in carrying axial compression than another section with a larger value of p at the same KL. Similarly, a section with a smaller b_x is more effective for flexure at a given L_b than another section with a larger b_x for the same L_b. This information may be used to select more efficient shapes when relatively large amounts of axial load or bending are present.

Determination of b_x when $C_b > 1.0$

The tabulated values of b_x assume that $C_b = 1.0$. These values may be modified in accordance with AISC *Specification* Sections F1 and H1.2. The following procedure may be used to account for $C_b > 1.0$.

$$b_{x(C_b > 1.0)} = \frac{b_{x(C_b = 1.0)}}{C_b} \geq b_{xmin} \tag{6-5}$$

Values of b_{xmin} are listed in Table 6-1 at $L_b = 0$ ft. See Aminmansour (2009) for more information on this method. Values for p, b_x, b_y, t_y and t_r presented in Table 6-1 have been multiplied by 10^3. Thus, when used in the appropriate interaction equation they must be multiplied by 10^{-3} (0.001).

PART 6 REFERENCES

Aminmansour, A. (2000), "A New Approach for Design of Steel Beam-Columns," *Engineering Journal*, Vol. 37, No. 2, 2nd Quarter, pp. 41–72, AISC, Chicago, IL.

Aminmansour, A. (2006), "New Method of Design for Combined Tension and Bending," *Engineering Journal*, Vol. 43, No. 4, 4th Quarter, pp. 247–256, AISC, Chicago, IL.

Aminmansour, A. (2009), "Optimum Flexural Design of Steel Members Utilizing Moment Gradient and C_b," *Engineering Journal*, Vol. 46, No. 1, 1st Quarter, pp. 47–55, AISC, Chicago, IL.

Seaburg, P.A. and Carter, C.J. (1997), *Torsional Analysis of Structural Steel Members*, Design Guide 9, AISC, Chicago, IL.

F_y = 50 ksi

Table 6-1
Combined Flexure and Axial Force
W-Shapes

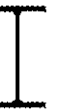

Shape		W44×											
		335[c]				290[c]				262[c]			
Design		$p \times 10^3$ (kips)$^{-1}$		$b_x \times 10^3$ (kip-ft)$^{-1}$		$p \times 10^3$ (kips)$^{-1}$		$b_x \times 10^3$ (kip-ft)$^{-1}$		$p \times 10^3$ (kips)$^{-1}$		$b_x \times 10^3$ (kip-ft)$^{-1}$	
		ASD	LRFD	ASD	LRFD	ASD	LRFD	ASD	LRFD	ASD	LRFD	ASD	LRFD
Effective length, KL (ft), with respect to least radius of gyration, r_y, or Unbraced Length, L_b (ft), for X-X axis bending	0	0.346	0.230	0.220	0.146	0.417	0.278	0.253	0.168	0.474	0.316	0.281	0.187
	11	0.378	0.251	0.220	0.146	0.454	0.302	0.253	0.168	0.516	0.343	0.281	0.187
	12	0.384	0.256	0.220	0.146	0.462	0.307	0.253	0.168	0.524	0.349	0.281	0.187
	13	0.392	0.261	0.222	0.148	0.470	0.313	0.255	0.170	0.533	0.355	0.284	0.189
	14	0.402	0.267	0.225	0.150	0.480	0.319	0.259	0.173	0.544	0.362	0.289	0.192
	15	0.412	0.274	0.229	0.152	0.490	0.326	0.264	0.175	0.555	0.369	0.294	0.196
	16	0.423	0.281	0.232	0.155	0.501	0.333	0.268	0.178	0.568	0.378	0.299	0.199
	17	0.435	0.290	0.236	0.157	0.514	0.342	0.273	0.181	0.582	0.387	0.304	0.203
	18	0.449	0.299	0.240	0.160	0.527	0.351	0.277	0.184	0.597	0.397	0.310	0.206
	19	0.463	0.308	0.244	0.162	0.542	0.361	0.282	0.188	0.613	0.408	0.316	0.210
	20	0.479	0.319	0.248	0.165	0.559	0.372	0.287	0.191	0.632	0.420	0.322	0.214
	22	0.515	0.343	0.256	0.171	0.597	0.397	0.298	0.198	0.674	0.448	0.335	0.223
	24	0.558	0.371	0.266	0.177	0.643	0.428	0.309	0.206	0.724	0.482	0.348	0.232
	26	0.608	0.405	0.275	0.183	0.702	0.467	0.321	0.214	0.785	0.522	0.363	0.242
	28	0.668	0.444	0.286	0.190	0.77	0.512	0.335	0.223	0.859	0.571	0.379	0.252
	30	0.738	0.491	0.297	0.198	0.851	0.567	0.349	0.232	0.950	0.632	0.397	0.264
	32	0.822	0.547	0.310	0.206	0.948	0.631	0.365	0.243	1.06	0.705	0.417	0.277
	34	0.923	0.614	0.323	0.215	1.06	0.708	0.382	0.254	1.19	0.793	0.438	0.292
	36	1.03	0.689	0.338	0.225	1.19	0.794	0.401	0.267	1.34	0.889	0.465	0.310
	38	1.15	0.767	0.354	0.235	1.33	0.885	0.429	0.286	1.49	0.990	0.507	0.337
	40	1.28	0.850	0.377	0.251	1.47	0.980	0.464	0.309	1.65	1.10	0.549	0.365
	42	1.41	0.937	0.404	0.269	1.62	1.08	0.499	0.332	1.82	1.21	0.592	0.394
	44	1.55	1.03	0.431	0.287	1.78	1.19	0.534	0.355	2.00	1.33	0.635	0.423
	46	1.69	1.12	0.459	0.305	1.95	1.30	0.570	0.379	2.18	1.45	0.679	0.452
	48	1.84	1.22	0.486	0.323	2.12	1.41	0.605	0.403	2.37	1.58	0.722	0.481
	50	2.00	1.33	0.514	0.342	2.30	1.53	0.641	0.426	2.58	1.71	0.766	0.510
Other Constants and Properties													
$b_y \times 10^3$, (kip-ft)$^{-1}$		1.51		1.00		1.74		1.16		1.96		1.30	
$f_y \times 10^3$, (kips)$^{-1}$		0.339		0.226		0.391		0.260		0.433		0.288	
$f_r \times 10^3$, (kips)$^{-1}$		0.417		0.278		0.480		0.320		0.531		0.354	
r_x/r_y		5.10				5.10				5.10			
r_y, in.		3.49				3.49				3.47			

[c] Shape is slender for compression with F_y = 50 ksi.

W44-W40

Table 6-1 (continued)
Combined Flexure and Axial Force
W-Shapes

F_y = 50 ksi

Shape		W44×				W40×							
		230[c,v]				593[b]				503[b]			
Design		$p \times 10^3$ (kips)$^{-1}$		$b_x \times 10^3$ (kip-ft)$^{-1}$		$p \times 10^3$ (kips)$^{-1}$		$b_x \times 10^3$ (kip-ft)$^{-1}$		$p \times 10^3$ (kips)$^{-1}$		$b_x \times 10^3$ (kip-ft)$^{-1}$	
		ASD	LRFD	ASD	LRFD	ASD	LRFD	ASD	LRFD	ASD	LRFD	ASD	LRFD
Effective length, KL (ft), with respect to least radius of gyration, r_y, or Unbraced Length, L_b (ft), for X-X axis bending	0	0.557	0.370	0.324	0.215	0.192	0.128	0.129	0.0859	0.226	0.150	0.154	0.102
	11	0.604	0.402	0.324	0.215	0.210	0.139	0.129	0.0859	0.247	0.165	0.154	0.102
	12	0.614	0.409	0.324	0.215	0.213	0.142	0.129	0.0859	0.252	0.168	0.154	0.102
	13	0.625	0.416	0.329	0.219	0.217	0.144	0.129	0.0859	0.257	0.171	0.154	0.102
	14	0.637	0.424	0.335	0.223	0.221	0.147	0.130	0.0863	0.262	0.174	0.155	0.103
	15	0.650	0.433	0.341	0.227	0.226	0.150	0.131	0.0870	0.268	0.178	0.156	0.104
	16	0.665	0.442	0.347	0.231	0.231	0.154	0.132	0.0877	0.274	0.182	0.158	0.105
	17	0.681	0.453	0.354	0.235	0.237	0.158	0.133	0.0884	0.281	0.187	0.159	0.106
	18	0.698	0.465	0.360	0.240	0.243	0.162	0.134	0.0892	0.289	0.192	0.161	0.107
	19	0.718	0.478	0.367	0.244	0.250	0.166	0.135	0.0899	0.297	0.198	0.163	0.108
	20	0.739	0.492	0.375	0.249	0.257	0.171	0.136	0.0907	0.306	0.204	0.164	0.109
	22	0.787	0.524	0.390	0.260	0.273	0.182	0.139	0.0923	0.326	0.217	0.168	0.112
	24	0.846	0.563	0.407	0.271	0.292	0.194	0.141	0.0939	0.350	0.233	0.171	0.114
	26	0.916	0.609	0.425	0.283	0.314	0.209	0.144	0.0956	0.377	0.251	0.175	0.117
	28	1.00	0.666	0.446	0.296	0.340	0.226	0.146	0.0973	0.410	0.273	0.179	0.119
	30	1.10	0.735	0.468	0.311	0.370	0.246	0.149	0.0991	0.448	0.298	0.183	0.122
	32	1.23	0.820	0.492	0.327	0.405	0.269	0.152	0.101	0.492	0.327	0.187	0.125
	34	1.39	0.924	0.519	0.346	0.446	0.297	0.155	0.103	0.544	0.362	0.192	0.128
	36	1.56	1.04	0.568	0.378	0.494	0.329	0.158	0.105	0.606	0.403	0.197	0.131
	38	1.73	1.15	0.621	0.413	0.551	0.366	0.161	0.107	0.675	0.449	0.201	0.134
	40	1.92	1.28	0.674	0.449	0.610	0.406	0.164	0.109	0.748	0.498	0.207	0.138
	42	2.12	1.41	0.729	0.485	0.673	0.448	0.168	0.112	0.825	0.549	0.212	0.141
	44	2.33	1.55	0.784	0.522	0.738	0.491	0.171	0.114	0.906	0.603	0.218	0.145
	46	2.54	1.69	0.840	0.559	0.807	0.537	0.175	0.116	0.990	0.659	0.224	0.149
	48	2.77	1.84	0.897	0.597	0.879	0.585	0.179	0.119	1.08	0.717	0.230	0.153
	50	3.00	2.00	0.954	0.634	0.953	0.634	0.183	0.122	1.17	0.778	0.237	0.158
Other Constants and Properties													
$b_y \times 10^3$, (kip-ft)$^{-1}$		2.27		1.51		0.741		0.493		0.904		0.602	
$t_y \times 10^3$, (kips)$^{-1}$		0.493		0.328		0.192		0.128		0.226		0.150	
$t_r \times 10^3$, (kips)$^{-1}$		0.605		0.403		0.236		0.157		0.277		0.185	
r_x/r_y		5.10				4.47				4.52			
r_y, in.		3.43				3.80				3.72			

[c] Shape is slender for compression with F_y = 50 ksi.
[b] Flange thickness greater than 2 in. Special requirements may apply per AISC *Specification* Section A3.1c.
[v] Shape does not meet the h/t_w limit for shear in AISC *Specification* Section G2.1(a) with F_y = 50 ksi; therefore, ϕ_v = 0.90 and Ω_v = 1.67.

Table 6-1 (continued)
Combined Flexure and Axial Force
W-Shapes

F_y = 50 ksi

Shape		W40×											
		431[h]				397[h]				392[h]			
Design		$p \times 10^3$ (kips)$^{-1}$		$b_x \times 10^3$ (kip-ft)$^{-1}$		$p \times 10^3$ (kips)$^{-1}$		$b_x \times 10^3$ (kip-ft)$^{-1}$		$p \times 10^3$ (kips)$^{-1}$		$b_x \times 10^3$ (kip-ft)$^{-1}$	
		ASD	LRFD	ASD	LRFD	ASD	LRFD	ASD	LRFD	ASD	LRFD	ASD	LRFD
Effective length, KL (ft), with respect to least radius of gyration, r_y, or Unbraced Length, L_b (ft), for X-X axis bending	0	0.263	0.175	0.182	0.121	0.285	0.190	0.198	0.132	0.288	0.192	0.208	0.139
	11	0.289	0.193	0.182	0.121	0.314	0.209	0.198	0.132	0.346	0.230	0.213	0.142
	12	0.295	0.196	0.182	0.121	0.320	0.213	0.198	0.132	0.358	0.238	0.217	0.144
	13	0.301	0.200	0.182	0.121	0.327	0.217	0.198	0.132	0.372	0.247	0.220	0.146
	14	0.307	0.204	0.184	0.122	0.334	0.222	0.201	0.133	0.387	0.258	0.223	0.148
	15	0.314	0.209	0.186	0.124	0.341	0.227	0.203	0.135	0.404	0.269	0.227	0.151
	16	0.322	0.214	0.188	0.125	0.350	0.233	0.205	0.137	0.424	0.282	0.230	0.153
	17	0.330	0.220	0.190	0.127	0.359	0.239	0.208	0.138	0.446	0.296	0.234	0.156
	18	0.340	0.226	0.193	0.128	0.369	0.246	0.211	0.140	0.470	0.313	0.238	0.158
	19	0.350	0.233	0.195	0.130	0.380	0.253	0.213	0.142	0.497	0.331	0.241	0.161
	20	0.361	0.240	0.197	0.131	0.392	0.261	0.216	0.144	0.527	0.351	0.245	0.163
	22	0.386	0.257	0.202	0.134	0.419	0.279	0.221	0.147	0.598	0.398	0.254	0.169
	24	0.415	0.276	0.207	0.138	0.451	0.300	0.227	0.151	0.687	0.457	0.263	0.175
	26	0.449	0.299	0.212	0.141	0.488	0.325	0.234	0.155	0.801	0.533	0.273	0.181
	28	0.489	0.325	0.218	0.145	0.532	0.354	0.240	0.160	0.929	0.618	0.283	0.188
	30	0.536	0.356	0.224	0.149	0.584	0.388	0.247	0.164	1.07	0.710	0.295	0.196
	32	0.591	0.393	0.230	0.153	0.644	0.429	0.255	0.169	1.21	0.807	0.307	0.204
	34	0.656	0.436	0.236	0.157	0.715	0.476	0.262	0.175	1.37	0.911	0.320	0.213
	36	0.734	0.488	0.243	0.162	0.801	0.533	0.271	0.180	1.54	1.02	0.335	0.223
	38	0.818	0.544	0.251	0.167	0.892	0.594	0.280	0.186	1.71	1.14	0.351	0.233
	40	0.906	0.603	0.259	0.172	0.989	0.658	0.289	0.192	1.90	1.26	0.372	0.248
	42	0.999	0.665	0.267	0.178	1.09	0.725	0.299	0.199	2.09	1.39	0.394	0.262
	44	1.10	0.729	0.276	0.184	1.20	0.796	0.310	0.206	2.29	1.53	0.415	0.276
	46	1.20	0.797	0.285	0.190	1.31	0.870	0.322	0.214				
	48	1.30	0.868	0.295	0.197	1.42	0.947	0.338	0.225				
	50	1.42	0.942	0.308	0.205	1.55	1.03	0.356	0.237				
Other Constants and Properties													
$b_y \times 10^3$, (kip-ft)$^{-1}$		1.09		0.723		1.19		0.790		1.71		1.14	
$f_y \times 10^3$, (kips)$^{-1}$		0.263		0.175		0.285		0.190		0.288		0.192	
$f_r \times 10^3$, (kips)$^{-1}$		0.323		0.215		0.351		0.234		0.354		0.236	
r_x/r_y		4.55				4.56				6.10			
r_y, in.		3.65				3.64				2.64			

[h] Flange thickness greater than 2 in. Special requirements may apply per AISC *Specification* Section A3.1c.

Note: Heavy line indicates KL/r_y equal to or greater than 200.

W40

Table 6-1 (continued)
Combined Flexure and Axial Force
W-Shapes

F_y = 50 ksi

Shape		W40×											
		372[b]				362[b]				331[b]			
Design		$p \times 10^3$ (kips)$^{-1}$		$b_x \times 10^3$ (kip-ft)$^{-1}$		$p \times 10^3$ (kips)$^{-1}$		$b_x \times 10^3$ (kip-ft)$^{-1}$		$p \times 10^3$ (kips)$^{-1}$		$b_x \times 10^3$ (kip-ft)$^{-1}$	
		ASD	LRFD	ASD	LRFD	ASD	LRFD	ASD	LRFD	ASD	LRFD	ASD	LRFD
Effective length, KL (ft), with respect to least radius of gyration, r_y, or Unbraced Length, L_b (ft), for X-X axis bending	0	0.304	0.202	0.212	0.141	0.315	0.210	0.217	0.145	0.342	0.227	0.249	0.166
	11	0.335	0.223	0.212	0.141	0.348	0.231	0.217	0.145	0.415	0.276	0.257	0.171
	12	0.341	0.227	0.212	0.141	0.354	0.236	0.217	0.145	0.430	0.286	0.262	0.174
	13	0.348	0.232	0.213	0.142	0.361	0.240	0.218	0.145	0.448	0.298	0.266	0.177
	14	0.356	0.237	0.215	0.143	0.369	0.246	0.221	0.147	0.467	0.311	0.271	0.180
	15	0.365	0.243	0.218	0.145	0.378	0.252	0.224	0.149	0.489	0.326	0.276	0.184
	16	0.374	0.249	0.221	0.147	0.388	0.258	0.227	0.151	0.514	0.342	0.281	0.187
	17	0.384	0.255	0.224	0.149	0.398	0.265	0.230	0.153	0.542	0.361	0.287	0.191
	18	0.395	0.263	0.227	0.151	0.410	0.273	0.233	0.155	0.573	0.381	0.292	0.194
	19	0.407	0.271	0.230	0.153	0.422	0.281	0.236	0.157	0.608	0.404	0.298	0.198
	20	0.420	0.280	0.233	0.155	0.436	0.290	0.239	0.159	0.647	0.430	0.304	0.202
	22	0.450	0.299	0.240	0.159	0.467	0.311	0.246	0.164	0.739	0.492	0.317	0.211
	24	0.485	0.323	0.246	0.164	0.503	0.335	0.253	0.168	0.856	0.570	0.331	0.220
	26	0.526	0.350	0.254	0.169	0.546	0.363	0.261	0.174	1.00	0.668	0.346	0.230
	28	0.574	0.382	0.261	0.174	0.596	0.396	0.269	0.179	1.16	0.774	0.362	0.241
	30	0.631	0.420	0.270	0.179	0.655	0.436	0.278	0.185	1.34	0.889	0.381	0.253
	32	0.698	0.464	0.278	0.185	0.724	0.482	0.287	0.191	1.52	1.01	0.401	0.267
	34	0.777	0.517	0.288	0.191	0.806	0.536	0.297	0.197	1.72	1.14	0.425	0.283
	36	0.871	0.579	0.298	0.198	0.904	0.601	0.307	0.204	1.92	1.28	0.456	0.304
	38	0.970	0.646	0.308	0.205	1.01	0.670	0.319	0.212	2.14	1.43	0.488	0.324
	40	1.08	0.715	0.320	0.213	1.12	0.742	0.331	0.220	2.38	1.58	0.519	0.345
	42	1.19	0.789	0.332	0.221	1.23	0.818	0.344	0.229	2.62	1.74	0.550	0.366
	44	1.30	0.866	0.345	0.230	1.35	0.898	0.358	0.238				
	46	1.42	0.946	0.365	0.243	1.48	0.982	0.380	0.253				
	48	1.55	1.03	0.385	0.256	1.61	1.07	0.401	0.267				
	50	1.68	1.12	0.405	0.270	1.74	1.16	0.422	0.281				
Other Constants and Properties													
$b_y \times 10^3$, (kip-ft)$^{-1}$		1.29		0.856		1.32		0.878		2.10		1.40	
$t_y \times 10^3$, (kips)$^{-1}$		0.304		0.202		0.315		0.210		0.342		0.227	
$t_r \times 10^3$, (kips)$^{-1}$		0.373		0.249		0.387		0.258		0.420		0.280	
r_x/r_y		4.58				4.58				6.19			
r_y, in.		3.60				3.60				2.57			

[b] Flange thickness greater than 2 in. Special requirements may apply per AISC *Specification* Section A3.1c.

Note: Heavy line indicates KL/r_y equal to or greater than 200.

Table 6-1 (continued)
Combined Flexure and Axial Force
W-Shapes

F_y = 50 ksi

W40

Shape		W40×											
		327[b]				324				297[c]			
Design		$p \times 10^3$ (kips)$^{-1}$		$b_x \times 10^3$ (kip-ft)$^{-1}$		$p \times 10^3$ (kips)$^{-1}$		$b_x \times 10^3$ (kip-ft)$^{-1}$		$p \times 10^3$ (kips)$^{-1}$		$b_x \times 10^3$ (kip-ft)$^{-1}$	
		ASD	LRFD	ASD	LRFD	ASD	LRFD	ASD	LRFD	ASD	LRFD	ASD	LRFD
Effective length, KL (ft), with respect to least radius of gyration, r_y, or Unbraced Length, L_b (ft), for X-X axis bending	0	0.348	0.232	0.253	0.168	0.350	0.233	0.244	0.162	0.386	0.257	0.268	0.178
	11	0.422	0.281	0.261	0.174	0.387	0.258	0.244	0.162	0.424	0.282	0.268	0.178
	12	0.437	0.291	0.265	0.177	0.394	0.262	0.244	0.162	0.432	0.287	0.268	0.178
	13	0.455	0.303	0.270	0.180	0.403	0.268	0.245	0.163	0.441	0.293	0.270	0.179
	14	0.475	0.316	0.275	0.183	0.412	0.274	0.249	0.165	0.451	0.300	0.274	0.182
	15	0.497	0.331	0.280	0.186	0.422	0.281	0.252	0.168	0.462	0.308	0.278	0.185
	16	0.522	0.347	0.285	0.190	0.433	0.288	0.256	0.170	0.474	0.316	0.282	0.188
	17	0.550	0.366	0.290	0.193	0.444	0.296	0.259	0.173	0.488	0.325	0.286	0.190
	18	0.581	0.387	0.296	0.197	0.457	0.304	0.263	0.175	0.502	0.334	0.291	0.193
	19	0.616	0.410	0.302	0.201	0.471	0.314	0.267	0.178	0.518	0.345	0.295	0.197
	20	0.656	0.436	0.308	0.205	0.487	0.324	0.271	0.180	0.535	0.356	0.300	0.200
	22	0.749	0.498	0.321	0.213	0.522	0.347	0.279	0.186	0.575	0.382	0.310	0.206
	24	0.866	0.576	0.335	0.223	0.563	0.374	0.288	0.192	0.621	0.413	0.321	0.213
	26	1.01	0.675	0.350	0.233	0.611	0.406	0.298	0.198	0.675	0.449	0.332	0.221
	28	1.18	0.783	0.367	0.244	0.667	0.444	0.308	0.205	0.739	0.492	0.344	0.229
	30	1.35	0.899	0.385	0.256	0.734	0.488	0.319	0.212	0.815	0.542	0.357	0.238
	32	1.54	1.02	0.406	0.270	0.813	0.541	0.330	0.220	0.904	0.602	0.372	0.247
	34	1.73	1.15	0.430	0.286	0.907	0.603	0.343	0.228	1.01	0.674	0.387	0.257
	36	1.95	1.29	0.462	0.307	1.02	0.676	0.357	0.237	1.13	0.755	0.404	0.269
	38	2.17	1.44	0.494	0.329	1.13	0.754	0.371	0.247	1.26	0.841	0.422	0.281
	40	2.40	1.60	0.526	0.350	1.25	0.835	0.387	0.258	1.40	0.932	0.446	0.297
	42	2.65	1.76	0.557	0.371	1.38	0.921	0.408	0.272	1.54	1.03	0.478	0.318
	44					1.52	1.01	0.435	0.289	1.70	1.13	0.509	0.339
	46					1.66	1.10	0.461	0.307	1.85	1.23	0.541	0.360
	48					1.81	1.20	0.488	0.324	2.02	1.34	0.573	0.381
	50					1.96	1.30	0.514	0.342	2.19	1.46	0.605	0.403
Other Constants and Properties													
$b_y \times 10^3$, (kip-ft)$^{-1}$		2.12		1.41		1.49		0.992		1.66		1.10	
$t_y \times 10^3$, (kips)$^{-1}$		0.348		0.232		0.350		0.233		0.383		0.255	
$t_r \times 10^3$, (kips)$^{-1}$		0.428		0.285		0.430		0.287		0.470		0.313	
r_x/r_y		6.20				4.58				4.60			
r_y, in.		2.58				3.58				3.54			

[c] Shape is slender for compression with F_y = 50 ksi.

[b] Flange thickness greater than 2 in. Special requirements may apply per AISC *Specification* Section A3.1c.

Note: Heavy line indicates KL/r_y equal to or greater than 200.

W40

Table 6-1 (continued)
Combined Flexure and Axial Force
W-Shapes

F_y = 50 ksi

Shape		W40×											
		294				278				277[c]			
Design		$p \times 10^3$ (kips)$^{-1}$		$b_x \times 10^3$ (kip-ft)$^{-1}$		$p \times 10^3$ (kips)$^{-1}$		$b_x \times 10^3$ (kip-ft)$^{-1}$		$p \times 10^3$ (kips)$^{-1}$		$b_x \times 10^3$ (kip-ft)$^{-1}$	
		ASD	LRFD	ASD	LRFD	ASD	LRFD	ASD	LRFD	ASD	LRFD	ASD	LRFD
Effective length, KL (ft), with respect to least radius of gyration, r_y, or Unbraced Length, L_b (ft), for X-X axis bending	0	0.387	0.258	0.281	0.187	0.406	0.270	0.299	0.199	0.425	0.283	0.285	0.190
	11	0.471	0.314	0.291	0.194	0.496	0.330	0.312	0.207	0.462	0.308	0.285	0.190
	12	0.489	0.325	0.296	0.197	0.515	0.343	0.318	0.211	0.470	0.313	0.285	0.190
	13	0.509	0.339	0.302	0.201	0.537	0.357	0.324	0.216	0.479	0.318	0.287	0.191
	14	0.532	0.354	0.308	0.205	0.562	0.374	0.331	0.220	0.488	0.325	0.291	0.193
	15	0.558	0.371	0.314	0.209	0.589	0.392	0.338	0.225	0.498	0.332	0.295	0.196
	16	0.586	0.390	0.321	0.214	0.620	0.413	0.345	0.229	0.510	0.339	0.300	0.199
	17	0.619	0.412	0.328	0.218	0.655	0.436	0.352	0.234	0.522	0.347	0.304	0.203
	18	0.655	0.436	0.335	0.223	0.694	0.462	0.360	0.240	0.536	0.357	0.309	0.206
	19	0.695	0.463	0.342	0.228	0.738	0.491	0.369	0.245	0.551	0.367	0.314	0.209
	20	0.740	0.493	0.350	0.233	0.788	0.524	0.377	0.251	0.569	0.379	0.320	0.213
	22	0.848	0.564	0.366	0.244	0.905	0.602	0.396	0.263	0.610	0.406	0.330	0.220
	24	0.985	0.655	0.384	0.256	1.06	0.702	0.416	0.277	0.658	0.438	0.342	0.228
	26	1.16	0.769	0.404	0.269	1.24	0.824	0.439	0.292	0.714	0.475	0.355	0.236
	28	1.34	0.892	0.426	0.284	1.44	0.956	0.464	0.309	0.780	0.519	0.368	0.245
	30	1.54	1.02	0.451	0.300	1.65	1.10	0.493	0.328	0.858	0.571	0.382	0.254
	32	1.75	1.16	0.482	0.320	1.88	1.25	0.535	0.356	0.950	0.632	0.398	0.265
	34	1.98	1.31	0.521	0.347	2.12	1.41	0.580	0.386	1.06	0.705	0.415	0.276
	36	2.22	1.47	0.561	0.373	2.38	1.58	0.624	0.415	1.19	0.791	0.434	0.289
	38	2.47	1.64	0.601	0.400	2.65	1.76	0.669	0.445	1.32	0.881	0.454	0.302
	40	2.73	1.82	0.640	0.426	2.93	1.95	0.714	0.475	1.47	0.976	0.484	0.322
	42	3.02	2.01	0.679	0.452	3.23	2.15	0.758	0.504	1.62	1.08	0.519	0.345
	44									1.78	1.18	0.555	0.369
	46									1.94	1.29	0.590	0.393
	48									2.11	1.41	0.625	0.416
	50									2.29	1.53	0.661	0.440
Other Constants and Properties													
$b_y \times 10^3$, (kip-ft)$^{-1}$		2.38		1.58		2.56		1.70		1.75		1.16	
$t_y \times 10^3$, (kips)$^{-1}$		0.387		0.258		0.406		0.270		0.410		0.273	
$t_r \times 10^3$, (kips)$^{-1}$		0.476		0.317		0.498		0.332		0.503		0.336	
r_x/r_y		6.24				6.27				4.58			
r_y, in.		2.55				2.52				3.58			

[c] Shape is slender for compression with F_y = 50 ksi.

Note: Heavy line indicates KL/r_y equal to or greater than 200.

F_y = 50 ksi

Table 6-1 (continued)
Combined Flexure and Axial Force
W-Shapes

W40

Shape		W40×											
		264				249[c]				235[c]			
Design		$p \times 10^3$ (kips)$^{-1}$		$b_x \times 10^3$ (kip-ft)$^{-1}$		$p \times 10^3$ (kips)$^{-1}$		$b_x \times 10^3$ (kip-ft)$^{-1}$		$p \times 10^3$ (kips)$^{-1}$		$b_x \times 10^3$ (kip-ft)$^{-1}$	
		ASD	LRFD	ASD	LRFD	ASD	LRFD	ASD	LRFD	ASD	LRFD	ASD	LRFD
Effective length, KL (ft), with respect to least radius of gyration, r_y, or Unbraced Length, L_b (ft), for X-X axis bending	0	0.432	0.287	0.315	0.210	0.483	0.321	0.318	0.212	0.504	0.335	0.353	0.235
	11	0.527	0.351	0.329	0.219	0.525	0.349	0.318	0.212	0.595	0.396	0.368	0.245
	12	0.548	0.365	0.335	0.223	0.534	0.355	0.318	0.212	0.615	0.409	0.376	0.250
	13	0.571	0.380	0.342	0.228	0.543	0.361	0.320	0.213	0.638	0.424	0.384	0.255
	14	0.597	0.397	0.349	0.233	0.554	0.368	0.325	0.217	0.666	0.443	0.393	0.261
	15	0.627	0.417	0.357	0.238	0.565	0.376	0.331	0.220	0.698	0.464	0.402	0.267
	16	0.660	0.439	0.365	0.243	0.578	0.385	0.336	0.224	0.734	0.488	0.411	0.274
	17	0.697	0.464	0.373	0.248	0.592	0.394	0.342	0.227	0.775	0.515	0.421	0.280
	18	0.738	0.491	0.382	0.254	0.608	0.404	0.347	0.231	0.820	0.546	0.431	0.287
	19	0.785	0.522	0.391	0.260	0.625	0.416	0.353	0.235	0.871	0.580	0.442	0.294
	20	0.838	0.557	0.401	0.267	0.643	0.428	0.359	0.239	0.928	0.618	0.454	0.302
	22	0.963	0.641	0.421	0.280	0.685	0.456	0.372	0.248	1.06	0.709	0.479	0.319
	24	1.12	0.747	0.444	0.295	0.736	0.490	0.386	0.257	1.24	0.823	0.507	0.337
	26	1.32	0.877	0.469	0.312	0.799	0.532	0.401	0.267	1.45	0.967	0.538	0.358
	28	1.53	1.02	0.498	0.331	0.875	0.582	0.417	0.278	1.68	1.12	0.573	0.381
	30	1.75	1.17	0.533	0.354	0.964	0.641	0.435	0.289	1.93	1.29	0.629	0.419
	32	2.00	1.33	0.582	0.387	1.07	0.711	0.454	0.302	2.20	1.46	0.690	0.459
	34	2.25	1.50	0.632	0.420	1.20	0.795	0.475	0.316	2.48	1.65	0.750	0.499
	36	2.53	1.68	0.681	0.453	1.34	0.892	0.498	0.331	2.79	1.85	0.811	0.540
	38	2.81	1.87	0.730	0.486	1.49	0.994	0.530	0.353	3.10	2.06	0.872	0.580
	40	3.12	2.07	0.780	0.519	1.65	1.10	0.573	0.381	3.44	2.29	0.932	0.620
	42	3.44	2.29	0.829	0.552	1.82	1.21	0.616	0.410	3.79	2.52	0.993	0.661
	44					2.00	1.33	0.659	0.438				
	46					2.19	1.46	0.702	0.467				
	48					2.38	1.59	0.746	0.496				
	50					2.59	1.72	0.790	0.525				
Other Constants and Properties													
$b_y \times 10^3$, (kip-ft)$^{-1}$		2.70		1.80		1.96		1.30		3.02		2.01	
$t_y \times 10^3$, (kips)$^{-1}$		0.432		0.287		0.454		0.302		0.483		0.322	
$t_r \times 10^3$, (kips)$^{-1}$		0.530		0.353		0.558		0.372		0.594		0.396	
r_x/r_y		6.27				4.59				6.26			
r_y, in.		2.52				3.55				2.54			

[c] Shape is slender for compression with F_y = 50 ksi.

Note: Heavy line indicates KL/r_y equal to or greater than 200.

W40

Table 6-1 (continued)
Combined Flexure and Axial Force
W-Shapes

F_y = 50 ksi

Shape		W40×											
		215[c]				211[c]				199[c]			
Design		$p \times 10^3$ (kips)$^{-1}$		$b_x \times 10^3$ (kip-ft)$^{-1}$		$p \times 10^3$ (kips)$^{-1}$		$b_x \times 10^3$ (kip-ft)$^{-1}$		$p \times 10^3$ (kips)$^{-1}$		$b_x \times 10^3$ (kip-ft)$^{-1}$	
		ASD	LRFD	ASD	LRFD	ASD	LRFD	ASD	LRFD	ASD	LRFD	ASD	LRFD
Effective length, KL (ft), with respect to least radius of gyration, r_y, or Unbraced Length, L_b (ft), for X-X axis bending	0	0.578	0.385	0.370	0.246	0.578	0.385	0.393	0.262	0.629	0.419	0.410	0.273
	11	0.627	0.417	0.370	0.246	0.681	0.453	0.412	0.274	0.685	0.456	0.410	0.273
	12	0.637	0.424	0.370	0.246	0.704	0.468	0.422	0.281	0.696	0.463	0.410	0.273
	13	0.648	0.431	0.373	0.248	0.729	0.485	0.432	0.287	0.708	0.471	0.416	0.277
	14	0.661	0.440	0.379	0.252	0.759	0.505	0.442	0.294	0.722	0.481	0.423	0.282
	15	0.674	0.448	0.385	0.256	0.792	0.527	0.453	0.301	0.738	0.491	0.431	0.287
	16	0.689	0.458	0.392	0.261	0.830	0.552	0.464	0.309	0.754	0.502	0.439	0.292
	17	0.705	0.469	0.399	0.265	0.873	0.581	0.476	0.317	0.773	0.514	0.447	0.297
	18	0.723	0.481	0.406	0.270	0.924	0.615	0.489	0.325	0.793	0.528	0.455	0.303
	19	0.742	0.494	0.413	0.275	0.983	0.654	0.503	0.334	0.815	0.543	0.464	0.309
	20	0.764	0.508	0.421	0.280	1.05	0.698	0.517	0.344	0.840	0.559	0.473	0.315
	22	0.812	0.540	0.437	0.291	1.21	0.803	0.548	0.364	0.896	0.596	0.493	0.328
	24	0.870	0.579	0.455	0.303	1.41	0.938	0.582	0.388	0.963	0.640	0.514	0.342
	26	0.939	0.625	0.474	0.315	1.66	1.10	0.622	0.414	1.04	0.694	0.537	0.357
	28	1.02	0.680	0.495	0.329	1.92	1.28	0.679	0.452	1.14	0.759	0.562	0.374
	30	1.12	0.746	0.517	0.344	2.20	1.47	0.753	0.501	1.26	0.838	0.590	0.393
	32	1.24	0.827	0.542	0.361	2.51	1.67	0.827	0.550	1.41	0.935	0.621	0.413
	34	1.39	0.926	0.569	0.379	2.83	1.88	0.902	0.600	1.58	1.05	0.655	0.436
	36	1.56	1.04	0.605	0.403	3.17	2.11	0.978	0.650	1.77	1.18	0.716	0.476
	38	1.74	1.16	0.660	0.439	3.54	2.35	1.05	0.701	1.98	1.32	0.782	0.520
	40	1.93	1.28	0.715	0.476	3.92	2.61	1.13	0.751	2.19	1.46	0.849	0.565
	42	2.12	1.41	0.771	0.513					2.41	1.61	0.918	0.610
	44	2.33	1.55	0.828	0.551					2.65	1.76	0.987	0.657
	46	2.55	1.69	0.885	0.589					2.90	1.93	1.06	0.703
	48	2.77	1.85	0.942	0.627					3.15	2.10	1.13	0.750
	50	3.01	2.00	1.00	0.665					3.42	2.28	1.20	0.797
Other Constants and Properties													
$b_y \times 10^3$, (kip-ft)$^{-1}$		2.28		1.52		3.39		2.26		2.60		1.73	
$t_y \times 10^3$, (kips)$^{-1}$		0.526		0.350		0.538		0.358		0.568		0.378	
$t_r \times 10^3$, (kips)$^{-1}$		0.646		0.431		0.661		0.440		0.698		0.465	
r_x/r_y		4.58				6.29				4.64			
r_y, in.		3.54				2.51				3.45			

[c] Shape is slender for compression with F_y = 50 ksi.

Note: Heavy line indicates KL/r_y equal to or greater than 200.

F_y = 50 ksi

Table 6-1 (continued)
Combined Flexure and Axial Force
W-Shapes

Shape		W40×											
		183[c]				167[c]				149[c,v]			
Design		$p \times 10^3$ (kips)$^{-1}$		$b_x \times 10^3$ (kip-ft)$^{-1}$		$p \times 10^3$ (kips)$^{-1}$		$b_x \times 10^3$ (kip-ft)$^{-1}$		$p \times 10^3$ (kips)$^{-1}$		$b_x \times 10^3$ (kip-ft)$^{-1}$	
		ASD	LRFD	ASD	LRFD	ASD	LRFD	ASD	LRFD	ASD	LRFD	ASD	LRFD
Effective length, KL (ft), with respect to least radius of gyration, r_y, or Unbraced Length, L_b (ft), for X-X axis bending	0	0.702	0.467	0.460	0.306	0.767	0.510	0.514	0.342	0.883	0.587	0.596	0.396
	11	0.823	0.548	0.485	0.323	0.907	0.603	0.547	0.364	1.05	0.701	0.644	0.429
	12	0.850	0.565	0.497	0.330	0.937	0.624	0.562	0.374	1.09	0.727	0.663	0.441
	13	0.880	0.585	0.509	0.339	0.973	0.647	0.577	0.384	1.14	0.756	0.682	0.454
	14	0.914	0.608	0.522	0.348	1.01	0.674	0.593	0.395	1.19	0.790	0.703	0.468
	15	0.953	0.634	0.536	0.357	1.06	0.705	0.610	0.406	1.25	0.828	0.725	0.483
	16	0.997	0.663	0.551	0.367	1.11	0.739	0.628	0.418	1.31	0.873	0.749	0.498
	17	1.05	0.696	0.567	0.377	1.17	0.779	0.647	0.431	1.39	0.925	0.774	0.515
	18	1.10	0.734	0.583	0.388	1.24	0.825	0.668	0.444	1.48	0.984	0.801	0.533
	19	1.17	0.777	0.600	0.399	1.32	0.878	0.689	0.459	1.58	1.05	0.830	0.552
	20	1.24	0.826	0.619	0.412	1.41	0.938	0.712	0.474	1.70	1.13	0.861	0.573
	22	1.43	0.948	0.659	0.439	1.64	1.09	0.763	0.508	2.02	1.34	0.930	0.619
	24	1.67	1.11	0.705	0.469	1.94	1.29	0.822	0.547	2.40	1.60	1.03	0.683
	26	1.96	1.30	0.763	0.507	2.28	1.52	0.919	0.611	2.82	1.88	1.18	0.783
	28	2.27	1.51	0.859	0.571	2.65	1.76	1.04	0.690	3.27	2.18	1.33	0.887
	30	2.61	1.74	0.957	0.636	3.04	2.02	1.16	0.771	3.75	2.50	1.49	0.993
	32	2.97	1.98	1.06	0.702	3.45	2.30	1.28	0.853	4.27	2.84	1.66	1.10
	34	3.35	2.23	1.16	0.769	3.90	2.59	1.41	0.937	4.82	3.21	1.82	1.21
	36	3.76	2.50	1.26	0.837	4.37	2.91	1.53	1.02	5.41	3.60	1.99	1.33
	38	4.19	2.79	1.36	0.905	4.87	3.24	1.66	1.11	6.02	4.01	2.16	1.44
	40	4.64	3.09	1.46	0.973	5.40	3.59	1.79	1.19				
Other Constants and Properties													
$b_y \times 10^3$, (kip-ft)$^{-1}$		4.03		2.68		4.69		3.12		5.74		3.82	
$f_y \times 10^3$, (kips)$^{-1}$		0.627		0.417		0.677		0.451		0.763		0.507	
$f_r \times 10^3$, (kips)$^{-1}$		0.770		0.513		0.832		0.555		0.937		0.624	
r_x/r_y		6.31				6.38				6.55			
r_y, in.		2.49				2.40				2.29			

[c] Shape is slender for compression with F_y = 50 ksi.
[v] Shape does not meet the h/t_w limit for shear in AISC *Specification* Section G2.1(a) with F_y = 50 ksi; therefore, ϕ_v = 0.90 and Ω_v = 1.67.
Note: Heavy line indicates KL/r_y equal to or greater than 200.

Table 6-1 (continued)
Combined Flexure and Axial Force
W-Shapes

F_y = 50 ksi

W36

Shape		W36×											
		652[h]				529[h]				487[h]			
Design		$p \times 10^3$ (kips)$^{-1}$		$b_x \times 10^3$ (kip-ft)$^{-1}$		$p \times 10^3$ (kips)$^{-1}$		$b_x \times 10^3$ (kip-ft)$^{-1}$		$p \times 10^3$ (kips)$^{-1}$		$b_x \times 10^3$ (kip-ft)$^{-1}$	
		ASD	LRFD	ASD	LRFD	ASD	LRFD	ASD	LRFD	ASD	LRFD	ASD	LRFD
Effective length, KL (ft), with respect to least radius of gyration, r_y, or Unbraced Length, L_b (ft), for X-X axis bending	0	0.174	0.116	0.122	0.0815	0.214	0.142	0.153	0.102	0.234	0.155	0.167	0.111
	11	0.188	0.125	0.122	0.0815	0.232	0.154	0.153	0.102	0.253	0.169	0.167	0.111
	12	0.190	0.127	0.122	0.0815	0.235	0.157	0.153	0.102	0.257	0.171	0.167	0.111
	13	0.193	0.129	0.122	0.0815	0.239	0.159	0.153	0.102	0.262	0.174	0.167	0.111
	14	0.197	0.131	0.122	0.0815	0.244	0.162	0.153	0.102	0.266	0.177	0.167	0.111
	15	0.200	0.133	0.123	0.0817	0.248	0.165	0.154	0.102	0.272	0.181	0.169	0.112
	16	0.204	0.136	0.124	0.0823	0.253	0.169	0.155	0.103	0.277	0.185	0.170	0.113
	17	0.208	0.139	0.124	0.0828	0.259	0.172	0.157	0.104	0.284	0.189	0.172	0.114
	18	0.213	0.142	0.125	0.0833	0.265	0.176	0.158	0.105	0.290	0.193	0.173	0.115
	19	0.218	0.145	0.126	0.0839	0.272	0.181	0.159	0.106	0.298	0.198	0.175	0.116
	20	0.223	0.149	0.127	0.0845	0.279	0.185	0.160	0.107	0.306	0.203	0.176	0.117
	22	0.236	0.157	0.129	0.0856	0.294	0.196	0.163	0.109	0.323	0.215	0.180	0.120
	24	0.250	0.166	0.130	0.0868	0.313	0.208	0.166	0.110	0.344	0.229	0.183	0.122
	26	0.266	0.177	0.132	0.0880	0.334	0.222	0.169	0.112	0.368	0.245	0.187	0.124
	28	0.284	0.189	0.134	0.0892	0.359	0.239	0.172	0.114	0.395	0.263	0.190	0.127
	30	0.306	0.203	0.136	0.0905	0.387	0.258	0.175	0.117	0.427	0.284	0.194	0.129
	32	0.330	0.220	0.138	0.0918	0.420	0.279	0.178	0.119	0.465	0.309	0.198	0.132
	34	0.359	0.239	0.140	0.0932	0.458	0.305	0.182	0.121	0.508	0.338	0.202	0.135
	36	0.392	0.261	0.142	0.0946	0.502	0.334	0.185	0.123	0.558	0.371	0.207	0.138
	38	0.430	0.286	0.144	0.0960	0.554	0.369	0.189	0.126	0.617	0.410	0.211	0.141
	40	0.475	0.316	0.147	0.0975	0.614	0.409	0.193	0.128	0.684	0.455	0.216	0.144
	42	0.524	0.348	0.149	0.0990	0.677	0.450	0.197	0.131	0.754	0.501	0.221	0.147
	44	0.575	0.382	0.151	0.101	0.743	0.494	0.201	0.134	0.827	0.550	0.226	0.150
	46	0.628	0.418	0.154	0.102	0.812	0.540	0.205	0.137	0.904	0.601	0.232	0.154
	48	0.684	0.455	0.156	0.104	0.884	0.588	0.210	0.140	0.984	0.655	0.237	0.158
	50	0.742	0.494	0.159	0.106	0.960	0.638	0.215	0.143	1.07	0.711	0.243	0.162
Other Constants and Properties													
$b_y \times 10^3$, (kip-ft)$^{-1}$		0.613		0.408		0.785		0.522		0.865		0.575	
$t_y \times 10^3$, (kips)$^{-1}$		0.174		0.116		0.214		0.142		0.234		0.155	
$t_r \times 10^3$, (kips)$^{-1}$		0.214		0.142		0.263		0.175		0.287		0.191	
r_x/r_y		3.95				4.00				3.99			
r_y, in.		4.10				4.00				3.96			

[h] Flange thickness greater than 2 in. Special requirements may apply per AISC *Specification* Section A3.1c.

Table 6-1 (continued)
Combined Flexure and Axial Force
W-Shapes

F_y = 50 ksi

W36

Shape		W36×											
		441[h]				395[h]				361[h]			
Design		$p \times 10^3$ (kips)$^{-1}$		$b_x \times 10^3$ (kip-ft)$^{-1}$		$p \times 10^3$ (kips)$^{-1}$		$b_x \times 10^3$ (kip-ft)$^{-1}$		$p \times 10^3$ (kips)$^{-1}$		$b_x \times 10^3$ (kip-ft)$^{-1}$	
		ASD	LRFD	ASD	LRFD	ASD	LRFD	ASD	LRFD	ASD	LRFD	ASD	LRFD
Effective length, KL (ft), with respect to least radius of gyration, r_y, or Unbraced Length, L_b (ft), for X-X axis bending	0	0.257	0.171	0.187	0.124	0.288	0.192	0.208	0.139	0.315	0.210	0.230	0.153
	11	0.279	0.186	0.187	0.124	0.313	0.208	0.208	0.139	0.343	0.228	0.230	0.153
	12	0.284	0.189	0.187	0.124	0.318	0.212	0.208	0.139	0.349	0.232	0.230	0.153
	13	0.288	0.192	0.187	0.124	0.324	0.216	0.208	0.139	0.355	0.236	0.230	0.153
	14	0.294	0.196	0.187	0.124	0.330	0.220	0.209	0.139	0.362	0.241	0.231	0.154
	15	0.300	0.199	0.189	0.125	0.337	0.224	0.211	0.141	0.370	0.246	0.234	0.155
	16	0.306	0.204	0.190	0.127	0.344	0.229	0.213	0.142	0.378	0.251	0.236	0.157
	17	0.313	0.208	0.192	0.128	0.352	0.234	0.216	0.144	0.387	0.257	0.239	0.159
	18	0.321	0.213	0.194	0.129	0.361	0.240	0.218	0.145	0.397	0.264	0.242	0.161
	19	0.329	0.219	0.196	0.130	0.371	0.247	0.221	0.147	0.407	0.271	0.245	0.163
	20	0.338	0.225	0.198	0.132	0.381	0.253	0.223	0.148	0.419	0.279	0.248	0.165
	22	0.358	0.238	0.202	0.135	0.404	0.269	0.228	0.152	0.444	0.296	0.254	0.169
	24	0.381	0.254	0.206	0.137	0.431	0.287	0.234	0.155	0.474	0.316	0.260	0.173
	26	0.408	0.272	0.211	0.140	0.462	0.307	0.239	0.159	0.509	0.339	0.267	0.178
	28	0.440	0.293	0.215	0.143	0.498	0.331	0.245	0.163	0.550	0.366	0.274	0.183
	30	0.476	0.317	0.220	0.147	0.540	0.359	0.251	0.167	0.597	0.397	0.282	0.188
	32	0.518	0.345	0.225	0.150	0.589	0.392	0.258	0.172	0.652	0.434	0.290	0.193
	34	0.567	0.377	0.231	0.153	0.646	0.430	0.265	0.176	0.716	0.477	0.299	0.199
	36	0.624	0.415	0.236	0.157	0.713	0.474	0.272	0.181	0.791	0.526	0.308	0.205
	38	0.693	0.461	0.242	0.161	0.792	0.527	0.280	0.186	0.880	0.586	0.317	0.211
	40	0.767	0.511	0.248	0.165	0.878	0.584	0.288	0.191	0.976	0.649	0.327	0.218
	42	0.846	0.563	0.255	0.169	0.968	0.644	0.296	0.197	1.08	0.716	0.338	0.225
	44	0.928	0.618	0.261	0.174	1.06	0.707	0.305	0.203	1.18	0.785	0.350	0.233
	46	1.01	0.675	0.269	0.179	1.16	0.772	0.315	0.210	1.29	0.858	0.362	0.241
	48	1.10	0.735	0.276	0.184	1.26	0.841	0.325	0.216	1.40	0.935	0.376	0.250
	50	1.20	0.798	0.284	0.189	1.37	0.913	0.336	0.224	1.52	1.01	0.395	0.263
Other Constants and Properties													
$b_y \times 10^3$, (kip-ft)$^{-1}$		0.968		0.644		1.10		0.729		1.22		0.809	
$t_y \times 10^3$, (kips)$^{-1}$		0.257		0.171		0.288		0.192		0.315		0.210	
$t_r \times 10^3$, (kips)$^{-1}$		0.316		0.210		0.354		0.236		0.387		0.258	
r_x/r_y		4.01				4.05				4.05			
r_y, in.		3.92				3.88				3.85			

[h] Flange thickness greater than 2 in. Special requirements may apply per AISC *Specification* Section A3.1c.

Table 6-1 (continued)
Combined Flexure and Axial Force
W-Shapes

F_y = 50 ksi

W36

Shape		W36×											
		330				302				282[c]			
Design		$p \times 10^3$ (kips)$^{-1}$		$b_x \times 10^3$ (kip-ft)$^{-1}$		$p \times 10^3$ (kips)$^{-1}$		$b_x \times 10^3$ (kip-ft)$^{-1}$		$p \times 10^3$ (kips)$^{-1}$		$b_x \times 10^3$ (kip-ft)$^{-1}$	
		ASD	LRFD	ASD	LRFD	ASD	LRFD	ASD	LRFD	ASD	LRFD	ASD	LRFD
Effective length, KL (ft), with respect to least radius of gyration, r_y, or Unbraced Length, L_b (ft), for X-X axis bending	0	0.345	0.229	0.253	0.168	0.375	0.250	0.278	0.185	0.404	0.269	0.299	0.199
	11	0.376	0.250	0.253	0.168	0.410	0.272	0.278	0.185	0.440	0.293	0.299	0.199
	12	0.382	0.254	0.253	0.168	0.416	0.277	0.278	0.185	0.447	0.298	0.299	0.199
	13	0.389	0.259	0.253	0.168	0.424	0.282	0.278	0.185	0.456	0.303	0.299	0.199
	14	0.397	0.264	0.254	0.169	0.432	0.288	0.280	0.186	0.465	0.309	0.302	0.201
	15	0.405	0.270	0.257	0.171	0.441	0.294	0.284	0.189	0.475	0.316	0.306	0.203
	16	0.414	0.276	0.260	0.173	0.451	0.300	0.287	0.191	0.486	0.323	0.310	0.206
	17	0.424	0.282	0.264	0.175	0.462	0.308	0.291	0.194	0.497	0.331	0.314	0.209
	18	0.435	0.289	0.267	0.178	0.474	0.315	0.295	0.196	0.510	0.339	0.319	0.212
	19	0.447	0.297	0.270	0.180	0.487	0.324	0.299	0.199	0.524	0.349	0.323	0.215
	20	0.459	0.306	0.274	0.182	0.501	0.333	0.303	0.202	0.539	0.359	0.328	0.218
	22	0.488	0.325	0.281	0.187	0.532	0.354	0.312	0.208	0.573	0.382	0.338	0.225
	24	0.521	0.347	0.289	0.192	0.569	0.378	0.321	0.214	0.613	0.408	0.348	0.232
	26	0.560	0.373	0.297	0.198	0.611	0.407	0.331	0.220	0.660	0.439	0.359	0.239
	28	0.605	0.403	0.306	0.204	0.661	0.440	0.341	0.227	0.714	0.475	0.371	0.247
	30	0.658	0.438	0.315	0.210	0.718	0.478	0.352	0.234	0.777	0.517	0.384	0.255
	32	0.719	0.478	0.325	0.216	0.786	0.523	0.364	0.242	0.850	0.566	0.397	0.264
	34	0.790	0.526	0.335	0.223	0.864	0.575	0.376	0.250	0.936	0.623	0.412	0.274
	36	0.874	0.581	0.346	0.230	0.956	0.636	0.389	0.259	1.04	0.690	0.428	0.284
	38	0.973	0.648	0.358	0.238	1.07	0.709	0.404	0.269	1.16	0.769	0.444	0.296
	40	1.08	0.717	0.371	0.247	1.18	0.785	0.419	0.279	1.28	0.852	0.463	0.308
	42	1.19	0.791	0.384	0.256	1.30	0.866	0.436	0.290	1.41	0.939	0.482	0.321
	44	1.30	0.868	0.399	0.265	1.43	0.950	0.456	0.303	1.55	1.03	0.514	0.342
	46	1.43	0.949	0.417	0.277	1.56	1.04	0.484	0.322	1.69	1.13	0.547	0.364
	48	1.55	1.03	0.441	0.293	1.70	1.13	0.513	0.341	1.84	1.23	0.580	0.386
	50	1.69	1.12	0.465	0.309	1.84	1.23	0.541	0.360	2.00	1.33	0.612	0.407
Other Constants and Properties													
$b_y \times 10^3$, (kip-ft)$^{-1}$		1.34		0.894		1.48		0.984		1.60		1.06	
$t_y \times 10^3$, (kips)$^{-1}$		0.345		0.229		0.375		0.250		0.403		0.268	
$t_r \times 10^3$, (kips)$^{-1}$		0.423		0.282		0.461		0.307		0.495		0.330	
r_x/r_y		4.05				4.03				4.05			
r_y, in.		3.83				3.82				3.80			

[c] Shape is slender for compression with F_y = 50 ksi.

Table 6-1 (continued)
Combined Flexure and Axial Force
W-Shapes

F_y = 50 ksi

W36

Shape		W36×											
		262[c]				256				247[c]			
Design		$p \times 10^3$ (kips)$^{-1}$		$b_x \times 10^3$ (kip-ft)$^{-1}$		$p \times 10^3$ (kips)$^{-1}$		$b_x \times 10^3$ (kip-ft)$^{-1}$		$p \times 10^3$ (kips)$^{-1}$		$b_x \times 10^3$ (kip-ft)$^{-1}$	
		ASD	LRFD	ASD	LRFD	ASD	LRFD	ASD	LRFD	ASD	LRFD	ASD	LRFD
Effective length, KL (ft), with respect to least radius of gyration, r_y, or Unbraced Length, L_b (ft), for X-X axis bending	0	0.440	0.293	0.324	0.215	0.444	0.295	0.343	0.228	0.475	0.316	0.346	0.230
	11	0.476	0.317	0.324	0.215	0.532	0.354	0.353	0.235	0.513	0.341	0.346	0.230
	12	0.483	0.322	0.324	0.215	0.550	0.366	0.360	0.239	0.521	0.347	0.346	0.230
	13	0.491	0.327	0.324	0.215	0.571	0.380	0.367	0.244	0.530	0.352	0.346	0.230
	14	0.501	0.333	0.327	0.218	0.595	0.396	0.374	0.249	0.539	0.359	0.350	0.233
	15	0.512	0.340	0.332	0.221	0.622	0.414	0.381	0.254	0.550	0.366	0.355	0.236
	16	0.524	0.348	0.337	0.224	0.651	0.433	0.389	0.259	0.561	0.373	0.360	0.240
	17	0.537	0.357	0.342	0.227	0.684	0.455	0.397	0.264	0.574	0.382	0.366	0.243
	18	0.551	0.366	0.347	0.231	0.721	0.480	0.406	0.270	0.588	0.391	0.372	0.247
	19	0.566	0.377	0.352	0.234	0.762	0.507	0.414	0.276	0.605	0.402	0.378	0.251
	20	0.583	0.388	0.357	0.238	0.808	0.538	0.424	0.282	0.623	0.414	0.384	0.255
	22	0.620	0.413	0.369	0.245	0.916	0.610	0.443	0.295	0.663	0.441	0.396	0.264
	24	0.664	0.442	0.381	0.253	1.05	0.700	0.465	0.309	0.711	0.473	0.410	0.273
	26	0.716	0.476	0.394	0.262	1.22	0.815	0.489	0.325	0.766	0.510	0.424	0.282
	28	0.776	0.516	0.408	0.271	1.42	0.945	0.515	0.343	0.831	0.553	0.440	0.293
	30	0.846	0.563	0.423	0.281	1.63	1.08	0.545	0.362	0.907	0.603	0.457	0.304
	32	0.928	0.617	0.439	0.292	1.86	1.23	0.582	0.387	0.996	0.663	0.475	0.316
	34	1.02	0.681	0.456	0.303	2.09	1.39	0.632	0.420	1.10	0.732	0.495	0.329
	36	1.14	0.757	0.474	0.316	2.35	1.56	0.681	0.453	1.22	0.815	0.516	0.343
	38	1.27	0.843	0.495	0.329	2.62	1.74	0.730	0.486	1.36	0.908	0.539	0.359
	40	1.40	0.934	0.517	0.344	2.90	1.93	0.779	0.519	1.51	1.01	0.570	0.379
	42	1.55	1.03	0.551	0.367	3.20	2.13	0.828	0.551	1.67	1.11	0.613	0.408
	44	1.70	1.13	0.589	0.392	3.51	2.33	0.877	0.584	1.83	1.22	0.657	0.437
	46	1.86	1.24	0.628	0.418					2.00	1.33	0.700	0.466
	48	2.02	1.35	0.666	0.443					2.18	1.45	0.744	0.495
	50	2.19	1.46	0.705	0.469					2.36	1.57	0.788	0.524
Other Constants and Properties													
$b_y \times 10^3$, (kip-ft)$^{-1}$		1.75		1.16		2.60		1.73		1.88		1.25	
$t_y \times 10^3$, (kips)$^{-1}$		0.433		0.288		0.444		0.295		0.461		0.307	
$t_r \times 10^3$, (kips)$^{-1}$		0.531		0.354		0.545		0.363		0.566		0.377	
r_x/r_y		4.07				5.62				4.06			
r_y, in.		3.76				2.65				3.74			

[c] Shape is slender for compression with F_y = 50 ksi.

Note: Heavy line indicates KL/r_y equal to or greater than 200.

Table 6-1 (continued)
Combined Flexure and Axial Force
W-Shapes

F_y = 50 ksi

W36

Shape		W36×											
		232[c]				231[c]				210[c]			
Design		$p \times 10^3$ (kips)$^{-1}$		$b_x \times 10^3$ (kip-ft)$^{-1}$		$p \times 10^3$ (kips)$^{-1}$		$b_x \times 10^3$ (kip-ft)$^{-1}$		$p \times 10^3$ (kips)$^{-1}$		$b_x \times 10^3$ (kip-ft)$^{-1}$	
		ASD	LRFD	ASD	LRFD	ASD	LRFD	ASD	LRFD	ASD	LRFD	ASD	LRFD
Effective length, KL (ft), with respect to least radius of gyration, r_y, or Unbraced Length, L_b (ft), for X-X axis bending	0	0.498	0.331	0.381	0.253	0.511	0.340	0.370	0.246	0.555	0.369	0.428	0.285
	11	0.591	0.393	0.394	0.262	0.553	0.368	0.370	0.246	0.653	0.435	0.445	0.296
	12	0.613	0.408	0.402	0.267	0.561	0.373	0.370	0.246	0.678	0.451	0.454	0.302
	13	0.637	0.424	0.410	0.273	0.570	0.379	0.370	0.246	0.705	0.469	0.465	0.309
	14	0.663	0.441	0.419	0.278	0.581	0.386	0.375	0.249	0.736	0.489	0.475	0.316
	15	0.694	0.461	0.427	0.284	0.592	0.394	0.381	0.253	0.770	0.512	0.486	0.323
	16	0.727	0.484	0.437	0.291	0.604	0.402	0.387	0.257	0.809	0.538	0.498	0.331
	17	0.765	0.509	0.447	0.297	0.618	0.411	0.393	0.261	0.852	0.567	0.510	0.339
	18	0.807	0.537	0.457	0.304	0.633	0.421	0.399	0.266	0.901	0.599	0.523	0.348
	19	0.855	0.569	0.468	0.311	0.649	0.432	0.406	0.270	0.955	0.635	0.536	0.357
	20	0.907	0.604	0.479	0.319	0.667	0.444	0.412	0.274	1.02	0.676	0.550	0.366
	22	1.03	0.687	0.503	0.335	0.709	0.472	0.426	0.284	1.16	0.772	0.580	0.386
	24	1.19	0.791	0.530	0.352	0.761	0.506	0.442	0.294	1.34	0.893	0.614	0.409
	26	1.39	0.923	0.559	0.372	0.821	0.546	0.458	0.305	1.57	1.05	0.653	0.434
	28	1.61	1.07	0.592	0.394	0.892	0.594	0.476	0.316	1.82	1.21	0.696	0.463
	30	1.85	1.23	0.631	0.420	0.975	0.649	0.494	0.329	2.09	1.39	0.765	0.509
	32	2.10	1.40	0.691	0.460	1.07	0.713	0.515	0.343	2.38	1.58	0.841	0.559
	34	2.37	1.58	0.751	0.500	1.19	0.789	0.537	0.357	2.69	1.79	0.917	0.610
	36	2.66	1.77	0.812	0.540	1.32	0.880	0.562	0.374	3.01	2.00	0.993	0.661
	38	2.96	1.97	0.872	0.580	1.47	0.981	0.588	0.391	3.36	2.23	1.07	0.712
	40	3.28	2.18	0.932	0.620	1.63	1.09	0.631	0.420	3.72	2.48	1.15	0.763
	42	3.62	2.41	0.992	0.660	1.80	1.20	0.680	0.452	4.10	2.73	1.220	0.814
	44					1.98	1.31	0.729	0.485				
	46					2.16	1.44	0.778	0.518				
	48					2.35	1.56	0.828	0.551				
	50					2.55	1.70	0.878	0.584				
Other Constants and Properties													
$b_y \times 10^3$, (kip-ft)$^{-1}$		2.92		1.94		2.02		1.35		3.33		2.22	
$t_y \times 10^3$, (kips)$^{-1}$		0.491		0.327		0.490		0.326		0.540		0.359	
$t_r \times 10^3$, (kips)$^{-1}$		0.603		0.402		0.602		0.401		0.663		0.442	
r_x/r_y		5.65				4.07				5.66			
r_y, in.		2.62				3.71				2.58			

[c] Shape is slender for compression with F_y = 50 ksi.

Note: Heavy line indicates KL/r_y equal to or greater than 200.

Table 6-1 (continued)
Combined Flexure and Axial Force
W-Shapes

F_y = 50 ksi

W36

Shape		W36×											
		194[c]				182[c]				170[c]			
Design		$p \times 10^3$ (kips)$^{-1}$		$b_x \times 10^3$ (kip-ft)$^{-1}$		$p \times 10^3$ (kips)$^{-1}$		$b_x \times 10^3$ (kip-ft)$^{-1}$		$p \times 10^3$ (kips)$^{-1}$		$b_x \times 10^3$ (kip-ft)$^{-1}$	
		ASD	LRFD	ASD	LRFD	ASD	LRFD	ASD	LRFD	ASD	LRFD	ASD	LRFD
Effective length, KL (ft), with respect to least radius of gyration, r_y, or Unbraced Length, L_b (ft), for X-X axis bending	0	0.618	0.411	0.464	0.309	0.669	0.445	0.496	0.330	0.732	0.487	0.533	0.355
	11	0.725	0.483	0.485	0.322	0.783	0.521	0.519	0.345	0.856	0.569	0.559	0.372
	12	0.749	0.498	0.496	0.330	0.808	0.538	0.531	0.353	0.883	0.587	0.573	0.381
	13	0.775	0.516	0.507	0.337	0.837	0.557	0.544	0.362	0.913	0.608	0.587	0.390
	14	0.806	0.536	0.519	0.345	0.869	0.578	0.557	0.371	0.948	0.631	0.602	0.400
	15	0.841	0.560	0.532	0.354	0.905	0.602	0.571	0.380	0.988	0.657	0.617	0.411
	16	0.884	0.588	0.545	0.363	0.947	0.630	0.586	0.390	1.03	0.687	0.634	0.422
	17	0.932	0.620	0.559	0.372	0.995	0.662	0.601	0.400	1.08	0.721	0.651	0.433
	18	0.986	0.656	0.574	0.382	1.05	0.701	0.618	0.411	1.14	0.760	0.670	0.445
	19	1.05	0.696	0.589	0.392	1.12	0.744	0.635	0.422	1.21	0.805	0.689	0.458
	20	1.11	0.741	0.606	0.403	1.19	0.792	0.653	0.435	1.29	0.858	0.710	0.472
	22	1.28	0.848	0.641	0.427	1.36	0.908	0.693	0.461	1.48	0.985	0.755	0.502
	24	1.48	0.984	0.681	0.453	1.58	1.05	0.738	0.491	1.72	1.15	0.806	0.536
	26	1.73	1.15	0.726	0.483	1.86	1.24	0.789	0.525	2.02	1.35	0.864	0.575
	28	2.01	1.34	0.786	0.523	2.16	1.43	0.868	0.577	2.35	1.56	0.966	0.643
	30	2.31	1.54	0.873	0.581	2.47	1.65	0.966	0.642	2.69	1.79	1.08	0.717
	32	2.63	1.75	0.961	0.639	2.81	1.87	1.07	0.709	3.07	2.04	1.19	0.792
	34	2.96	1.97	1.05	0.699	3.18	2.11	1.17	0.775	3.46	2.30	1.31	0.869
	36	3.32	2.21	1.14	0.758	3.56	2.37	1.27	0.843	3.88	2.58	1.42	0.946
	38	3.70	2.46	1.23	0.818	3.97	2.64	1.37	0.911	4.32	2.88	1.54	1.02
	40	4.10	2.73	1.32	0.878	4.40	2.93	1.47	0.979	4.79	3.19	1.66	1.10
	42	4.52	3.01	1.41	0.938	4.85	3.23	1.57	1.05	5.28	3.51	1.77	1.18
Other Constants and Properties													
$b_y \times 10^3$, (kip-ft)$^{-1}$		3.65		2.43		3.93		2.61		4.25		2.83	
$t_y \times 10^3$, (kips)$^{-1}$		0.586		0.390		0.623		0.415		0.668		0.444	
$t_r \times 10^3$, (kips)$^{-1}$		0.720		0.480		0.765		0.510		0.821		0.547	
r_x/r_y		5.70				5.69				5.73			
r_y, in.		2.56				2.55				2.53			

[c] Shape is slender for compression with F_y = 50 ksi.

Note: Heavy line indicates KL/r_y equal to or greater than 200.

Table 6-1 (continued)
Combined Flexure and Axial Force
W-Shapes

F_y = 50 ksi

W36

Shape		W36×											
		160[c]				150[c]				135[c,v]			
Design		$p \times 10^3$ (kips)$^{-1}$		$b_x \times 10^3$ (kip-ft)$^{-1}$		$p \times 10^3$ (kips)$^{-1}$		$b_x \times 10^3$ (kip-ft)$^{-1}$		$p \times 10^3$ (kips)$^{-1}$		$b_x \times 10^3$ (kip-ft)$^{-1}$	
		ASD	LRFD	ASD	LRFD	ASD	LRFD	ASD	LRFD	ASD	LRFD	ASD	LRFD
Effective length, KL (ft), with respect to least radius of gyration, r_y, or Unbraced Length, L_b (ft), for X-X axis bending	0	0.791	0.526	0.571	0.380	0.851	0.566	0.613	0.408	0.967	0.643	0.700	0.466
	11	0.925	0.616	0.601	0.400	0.997	0.663	0.648	0.431	1.14	0.758	0.748	0.498
	12	0.955	0.635	0.616	0.410	1.03	0.684	0.665	0.442	1.18	0.783	0.769	0.512
	13	0.988	0.657	0.632	0.420	1.06	0.709	0.682	0.454	1.22	0.812	0.791	0.526
	14	1.03	0.683	0.648	0.431	1.11	0.736	0.701	0.466	1.27	0.845	0.814	0.541
	15	1.07	0.711	0.666	0.443	1.15	0.767	0.721	0.479	1.33	0.883	0.838	0.558
	16	1.12	0.744	0.684	0.455	1.21	0.803	0.741	0.493	1.39	0.927	0.864	0.575
	17	1.17	0.781	0.703	0.468	1.27	0.844	0.763	0.508	1.47	0.977	0.892	0.593
	18	1.24	0.824	0.724	0.482	1.34	0.890	0.786	0.523	1.55	1.03	0.921	0.613
	19	1.31	0.872	0.746	0.496	1.42	0.943	0.811	0.540	1.65	1.10	0.952	0.634
	20	1.39	0.928	0.769	0.511	1.51	1.00	0.837	0.557	1.77	1.18	0.986	0.656
	22	1.61	1.07	0.820	0.545	1.74	1.16	0.895	0.596	2.06	1.37	1.06	0.706
	24	1.88	1.25	0.878	0.584	2.04	1.36	0.962	0.640	2.44	1.62	1.15	0.763
	26	2.20	1.47	0.950	0.632	2.40	1.59	1.06	0.706	2.87	1.91	1.31	0.871
	28	2.56	1.70	1.07	0.714	2.78	1.85	1.20	0.799	3.32	2.21	1.49	0.989
	30	2.94	1.95	1.20	0.797	3.19	2.12	1.34	0.894	3.82	2.54	1.67	1.11
	32	3.34	2.22	1.33	0.883	3.63	2.42	1.49	0.991	4.34	2.89	1.85	1.23
	34	3.77	2.51	1.46	0.969	4.10	2.73	1.64	1.09	4.90	3.26	2.05	1.36
	36	4.23	2.81	1.59	1.06	4.59	3.06	1.79	1.19	5.49	3.66	2.24	1.49
	38	4.71	3.13	1.72	1.15	5.12	3.41	1.94	1.29	6.12	4.07	2.44	1.62
	40	5.22	3.47	1.86	1.23	5.67	3.77	2.10	1.40				
Other Constants and Properties													
$b_y \times 10^3$, (kip-ft)$^{-1}$		4.61		3.07		5.02		3.34		5.97		3.97	
$t_y \times 10^3$, (kips)$^{-1}$		0.711		0.473		0.754		0.502		0.837		0.557	
$t_r \times 10^3$, (kips)$^{-1}$		0.873		0.582		0.926		0.617		1.030		0.685	
r_x/r_y		5.76				5.79				5.88			
r_y, in.		2.50				2.47				2.38			

[c] Shape is slender for compression with F_y = 50 ksi.
[v] Shape does not meet the h/t_w limit for shear in AISC *Specification* Section G2.1(a) with F_y = 50 ksi; therefore, ϕ_v = 0.90 and Ω_v = 1.67.
Note: Heavy line indicates KL/r_y equal to or greater than 200.

Table 6-1 (continued)
Combined Flexure and Axial Force
W-Shapes

F_y = 50 ksi

W33

Shape		W33×											
		387[h]				354[h]				318			
Design		$p \times 10^3$ (kips)$^{-1}$		$b_x \times 10^3$ (kip-ft)$^{-1}$		$p \times 10^3$ (kips)$^{-1}$		$b_x \times 10^3$ (kip-ft)$^{-1}$		$p \times 10^3$ (kips)$^{-1}$		$b_x \times 10^3$ (kip-ft)$^{-1}$	
		ASD	LRFD	ASD	LRFD	ASD	LRFD	ASD	LRFD	ASD	LRFD	ASD	LRFD
Effective length, KL (ft), with respect to least radius of gyration, r_y, or Unbraced Length, L_b (ft), for X-X axis bending	0	0.293	0.195	0.228	0.152	0.321	0.214	0.251	0.167	0.356	0.237	0.281	0.187
	11	0.320	0.213	0.228	0.152	0.352	0.234	0.251	0.167	0.391	0.260	0.281	0.187
	12	0.326	0.217	0.228	0.152	0.358	0.238	0.251	0.167	0.398	0.265	0.281	0.187
	13	0.332	0.221	0.228	0.152	0.365	0.243	0.251	0.167	0.406	0.270	0.281	0.187
	14	0.339	0.225	0.230	0.153	0.372	0.248	0.253	0.168	0.414	0.276	0.283	0.189
	15	0.346	0.230	0.232	0.155	0.380	0.253	0.256	0.170	0.423	0.282	0.287	0.191
	16	0.354	0.236	0.235	0.156	0.389	0.259	0.259	0.172	0.434	0.288	0.290	0.193
	17	0.363	0.241	0.237	0.158	0.399	0.266	0.261	0.174	0.445	0.296	0.294	0.195
	18	0.372	0.248	0.239	0.159	0.410	0.273	0.264	0.176	0.457	0.304	0.297	0.198
	19	0.383	0.255	0.242	0.161	0.421	0.280	0.267	0.178	0.470	0.313	0.301	0.200
	20	0.394	0.262	0.244	0.163	0.434	0.289	0.270	0.180	0.484	0.322	0.305	0.203
	22	0.419	0.279	0.250	0.166	0.462	0.308	0.277	0.184	0.516	0.343	0.313	0.208
	24	0.449	0.299	0.255	0.170	0.495	0.330	0.283	0.189	0.554	0.368	0.321	0.214
	26	0.483	0.322	0.261	0.174	0.534	0.355	0.290	0.193	0.598	0.398	0.330	0.220
	28	0.524	0.348	0.267	0.178	0.579	0.386	0.298	0.198	0.649	0.432	0.339	0.226
	30	0.571	0.380	0.273	0.182	0.632	0.421	0.305	0.203	0.710	0.472	0.349	0.232
	32	0.626	0.416	0.280	0.186	0.694	0.462	0.313	0.208	0.780	0.519	0.359	0.239
	34	0.690	0.459	0.287	0.191	0.767	0.510	0.322	0.214	0.863	0.574	0.370	0.246
	36	0.766	0.510	0.294	0.196	0.854	0.568	0.331	0.220	0.963	0.641	0.382	0.254
	38	0.854	0.568	0.302	0.201	0.951	0.633	0.340	0.227	1.07	0.714	0.395	0.263
	40	0.946	0.629	0.310	0.206	1.05	0.701	0.351	0.233	1.19	0.791	0.408	0.271
	42	1.04	0.694	0.318	0.212	1.16	0.773	0.361	0.240	1.31	0.872	0.422	0.281
	44	1.14	0.762	0.327	0.218	1.28	0.848	0.373	0.248	1.44	0.957	0.438	0.291
	46	1.25	0.832	0.337	0.224	1.39	0.927	0.385	0.256	1.57	1.05	0.454	0.302
	48	1.36	0.906	0.347	0.231	1.52	1.01	0.398	0.265	1.71	1.14	0.477	0.318
	50	1.48	0.994	0.358	0.238	1.65	1.10	0.412	0.274	1.86	1.24	0.502	0.334
Other Constants and Properties													
$b_y \times 10^3$, (kip-ft)$^{-1}$		1.14		0.760		1.26		0.841		1.43		0.948	
$t_y \times 10^3$, (kips)$^{-1}$		0.293		0.195		0.321		0.214		0.356		0.237	
$t_r \times 10^3$, (kips)$^{-1}$		0.360		0.240		0.394		0.263		0.438		0.292	
r_x/r_y		3.87				3.88				3.91			
r_y, in.		3.77				3.74				3.71			

[h] Flange thickness greater than 2 in. Special requirements may apply per AISC *Specification* Section A3.1c.

Table 6-1 (continued)
Combined Flexure and Axial Force
W-Shapes

F_y = 50 ksi

W33

Shape		W33×											
		291				263				241[c]			
Design		$p \times 10^3$ (kips)$^{-1}$		$b_x \times 10^3$ (kip-ft)$^{-1}$		$p \times 10^3$ (kips)$^{-1}$		$b_x \times 10^3$ (kip-ft)$^{-1}$		$p \times 10^3$ (kips)$^{-1}$		$b_x \times 10^3$ (kip-ft)$^{-1}$	
		ASD	LRFD	ASD	LRFD	ASD	LRFD	ASD	LRFD	ASD	LRFD	ASD	LRFD
Effective length, KL (ft), with respect to least radius of gyration, r_y, or Unbraced Length, L_b (ft), for X-X axis bending	0	0.390	0.260	0.307	0.204	0.432	0.287	0.343	0.228	0.471	0.313	0.379	0.252
	11	0.429	0.285	0.307	0.204	0.475	0.316	0.343	0.228	0.518	0.344	0.379	0.252
	12	0.436	0.290	0.307	0.204	0.483	0.322	0.343	0.228	0.527	0.351	0.379	0.252
	13	0.445	0.296	0.307	0.204	0.493	0.328	0.343	0.228	0.538	0.358	0.380	0.253
	14	0.454	0.302	0.311	0.207	0.503	0.335	0.348	0.231	0.550	0.366	0.386	0.257
	15	0.465	0.309	0.315	0.210	0.515	0.343	0.352	0.234	0.563	0.374	0.391	0.260
	16	0.476	0.317	0.319	0.212	0.528	0.351	0.357	0.238	0.577	0.384	0.397	0.264
	17	0.488	0.325	0.323	0.215	0.542	0.360	0.362	0.241	0.593	0.394	0.403	0.268
	18	0.502	0.334	0.328	0.218	0.557	0.370	0.367	0.244	0.609	0.405	0.409	0.272
	19	0.517	0.344	0.332	0.221	0.573	0.381	0.373	0.248	0.628	0.418	0.416	0.276
	20	0.533	0.354	0.337	0.224	0.591	0.393	0.378	0.252	0.648	0.431	0.422	0.281
	22	0.568	0.378	0.346	0.230	0.631	0.420	0.390	0.259	0.693	0.461	0.436	0.290
	24	0.611	0.406	0.356	0.237	0.679	0.452	0.402	0.267	0.746	0.496	0.450	0.300
	26	0.660	0.439	0.367	0.244	0.734	0.488	0.415	0.276	0.809	0.538	0.466	0.310
	28	0.718	0.478	0.378	0.251	0.799	0.532	0.428	0.285	0.882	0.587	0.483	0.321
	30	0.786	0.523	0.390	0.259	0.875	0.582	0.443	0.295	0.968	0.644	0.501	0.333
	32	0.865	0.576	0.403	0.268	0.965	0.642	0.459	0.305	1.07	0.712	0.520	0.346
	34	0.959	0.638	0.416	0.277	1.07	0.712	0.476	0.317	1.19	0.791	0.541	0.360
	36	1.07	0.713	0.431	0.287	1.20	0.797	0.494	0.329	1.33	0.887	0.564	0.375
	38	1.19	0.794	0.447	0.297	1.33	0.888	0.514	0.342	1.48	0.988	0.589	0.392
	40	1.32	0.880	0.463	0.308	1.48	0.984	0.535	0.356	1.65	1.09	0.619	0.412
	42	1.46	0.970	0.482	0.320	1.63	1.08	0.562	0.374	1.81	1.21	0.663	0.441
	44	1.60	1.06	0.503	0.335	1.79	1.19	0.598	0.398	1.99	1.32	0.708	0.471
	46	1.75	1.16	0.533	0.354	1.96	1.30	0.635	0.422	2.18	1.45	0.753	0.501
	48	1.90	1.27	0.563	0.374	2.13	1.42	0.672	0.447	2.37	1.58	0.797	0.530
	50	2.07	1.37	0.592	0.394	2.31	1.54	0.708	0.471	2.57	1.71	0.842	0.560
Other Constants and Properties													
$b_f \times 10^3$, (kip-ft)$^{-1}$		1.58		1.05		1.76		1.17		1.96		1.30	
$t_f \times 10^3$, (kips)$^{-1}$		0.390		0.260		0.432		0.287		0.470		0.313	
$t_r \times 10^3$, (kips)$^{-1}$		0.479		0.320		0.530		0.353		0.577		0.385	
r_x/r_y		3.91				3.91				3.90			
r_y, in.		3.68				3.66				3.62			

[c] Shape is slender for compression with F_y = 50 ksi.

Table 6-1 (continued)
Combined Flexure and Axial Force
W-Shapes

F_y = 50 ksi

W33

Shape		W33×											
		221[c]				201[c]				169[c]			
Design		$p \times 10^3$ (kips)$^{-1}$		$b_x \times 10^3$ (kip-ft)$^{-1}$		$p \times 10^3$ (kips)$^{-1}$		$b_x \times 10^3$ (kip-ft)$^{-1}$		$p \times 10^3$ (kips)$^{-1}$		$b_x \times 10^3$ (kip-ft)$^{-1}$	
		ASD	LRFD	ASD	LRFD	ASD	LRFD	ASD	LRFD	ASD	LRFD	ASD	LRFD
Effective length, KL (ft), with respect to least radius of gyration, r_y, or Unbraced Length, L_b (ft), for X-X axis bending	0	0.522	0.347	0.416	0.277	0.588	0.391	0.461	0.307	0.720	0.479	0.566	0.377
	11	0.568	0.378	0.416	0.277	0.640	0.426	0.461	0.307	0.851	0.566	0.595	0.396
	12	0.578	0.384	0.416	0.277	0.651	0.433	0.461	0.307	0.880	0.586	0.608	0.405
	13	0.588	0.391	0.418	0.278	0.663	0.441	0.464	0.309	0.913	0.607	0.623	0.415
	14	0.600	0.399	0.424	0.282	0.676	0.450	0.471	0.314	0.950	0.632	0.638	0.425
	15	0.615	0.409	0.431	0.286	0.690	0.459	0.479	0.319	0.992	0.660	0.654	0.435
	16	0.630	0.419	0.437	0.291	0.706	0.470	0.487	0.324	1.04	0.692	0.671	0.447
	17	0.648	0.431	0.444	0.296	0.724	0.482	0.495	0.329	1.10	0.731	0.689	0.458
	18	0.666	0.443	0.451	0.300	0.743	0.494	0.504	0.335	1.16	0.775	0.708	0.471
	19	0.687	0.457	0.459	0.305	0.764	0.508	0.512	0.341	1.24	0.825	0.728	0.484
	20	0.709	0.472	0.467	0.310	0.788	0.524	0.522	0.347	1.32	0.881	0.749	0.498
	22	0.760	0.505	0.483	0.321	0.845	0.562	0.541	0.360	1.52	1.01	0.794	0.528
	24	0.819	0.545	0.500	0.333	0.912	0.607	0.561	0.374	1.78	1.19	0.846	0.563
	26	0.889	0.591	0.519	0.345	0.991	0.659	0.584	0.388	2.09	1.39	0.905	0.602
	28	0.970	0.646	0.539	0.358	1.08	0.721	0.608	0.404	2.43	1.62	0.999	0.664
	30	1.07	0.710	0.560	0.373	1.19	0.794	0.634	0.422	2.79	1.86	1.11	0.737
	32	1.18	0.786	0.584	0.388	1.32	0.880	0.663	0.441	3.17	2.11	1.21	0.810
	34	1.32	0.876	0.609	0.405	1.48	0.984	0.694	0.462	3.58	2.38	1.33	0.883
	36	1.48	0.982	0.637	0.424	1.66	1.10	0.728	0.484	4.01	2.67	1.44	0.957
	38	1.64	1.09	0.667	0.444	1.85	1.23	0.782	0.520	4.47	2.98	1.55	1.03
	40	1.82	1.21	0.719	0.478	2.05	1.36	0.846	0.563	4.95	3.30	1.66	1.10
	42	2.01	1.34	0.772	0.514	2.26	1.50	0.910	0.606				
	44	2.20	1.47	0.825	0.549	2.48	1.65	0.975	0.649				
	46	2.41	1.60	0.879	0.585	2.71	1.80	1.04	0.692				
	48	2.62	1.75	0.932	0.620	2.95	1.96	1.11	0.736				
	50	2.85	1.89	0.986	0.656	3.20	2.13	1.17	0.780				
Other Constants and Properties													
$b_f \times 10^3$, (kip-ft)$^{-1}$		2.17		1.45		2.42		1.61		4.22		2.81	
$t_f \times 10^3$, (kips)$^{-1}$		0.511		0.340		0.565		0.376		0.675		0.449	
$t_r \times 10^3$, (kips)$^{-1}$		0.628		0.419		0.694		0.463		0.829		0.553	
r_x/r_y		3.93				3.93				5.48			
r_y, in.		3.59				3.56				2.50			

[c] Shape is slender for compression with F_y = 50 ksi.

Note: Heavy line indicates KL/r_y equal to or greater than 200.

W33

Table 6-1 (continued)
Combined Flexure and Axial Force
W-Shapes

F_y = 50 ksi

Shape		W33×											
		152[c]				141[c]				130[c]			
Design		$p \times 10^3$ (kips)$^{-1}$		$b_x \times 10^3$ (kip-ft)$^{-1}$		$p \times 10^3$ (kips)$^{-1}$		$b_x \times 10^3$ (kip-ft)$^{-1}$		$p \times 10^3$ (kips)$^{-1}$		$b_x \times 10^3$ (kip-ft)$^{-1}$	
		ASD	LRFD	ASD	LRFD	ASD	LRFD	ASD	LRFD	ASD	LRFD	ASD	LRFD
Effective length, KL (ft), with respect to least radius of gyration, r_y, or Unbraced Length, L_b (ft), for X-X axis bending	0	0.809	0.538	0.637	0.424	0.891	0.593	0.693	0.461	0.982	0.654	0.763	0.508
	11	0.956	0.636	0.673	0.447	1.05	0.702	0.735	0.489	1.16	0.775	0.814	0.542
	12	0.988	0.658	0.689	0.459	1.09	0.726	0.754	0.502	1.20	0.801	0.837	0.557
	13	1.03	0.682	0.707	0.470	1.13	0.753	0.774	0.515	1.25	0.832	0.860	0.572
	14	1.07	0.710	0.725	0.483	1.18	0.784	0.796	0.529	1.30	0.867	0.885	0.589
	15	1.11	0.742	0.745	0.496	1.23	0.820	0.818	0.544	1.36	0.907	0.911	0.606
	16	1.17	0.778	0.765	0.509	1.29	0.860	0.841	0.560	1.43	0.952	0.939	0.624
	17	1.23	0.819	0.787	0.524	1.36	0.907	0.866	0.576	1.51	1.00	0.968	0.644
	18	1.30	0.866	0.810	0.539	1.44	0.960	0.893	0.594	1.60	1.06	0.999	0.665
	19	1.39	0.923	0.834	0.555	1.53	1.02	0.921	0.613	1.70	1.13	1.03	0.687
	20	1.48	0.987	0.860	0.572	1.64	1.09	0.951	0.633	1.82	1.21	1.07	0.711
	22	1.71	1.14	0.917	0.610	1.91	1.27	1.02	0.677	2.13	1.42	1.15	0.764
	24	2.01	1.34	0.982	0.653	2.25	1.50	1.09	0.728	2.52	1.68	1.24	0.826
	26	2.36	1.57	1.07	0.709	2.64	1.76	1.21	0.808	2.96	1.97	1.41	0.939
	28	2.74	1.82	1.20	0.798	3.07	2.04	1.37	0.911	3.43	2.28	1.60	1.06
	30	3.15	2.09	1.33	0.888	3.52	2.34	1.53	1.02	3.94	2.62	1.78	1.19
	32	3.58	2.38	1.47	0.979	4.00	2.66	1.69	1.12	4.48	2.98	1.98	1.32
	34	4.04	2.69	1.61	1.07	4.52	3.01	1.85	1.23	5.06	3.37	2.17	1.45
	36	4.53	3.02	1.75	1.16	5.07	3.37	2.02	1.34	5.68	3.78	2.37	1.58
	38	5.05	3.36	1.89	1.26	5.65	3.76	2.18	1.45	6.32	4.21	2.57	1.71
	40	5.60	3.72	2.03	1.35	6.26	4.16	2.35	1.56				
Other Constants and Properties													
$b_y \times 10^3$, (kip-ft)$^{-1}$		4.82		3.21		5.33		3.54		5.99		3.98	
$t_y \times 10^3$, (kips)$^{-1}$		0.744		0.495		0.805		0.535		0.872		0.580	
$t_r \times 10^3$, (kips)$^{-1}$		0.914		0.609		0.989		0.659		1.07		0.714	
r_x/r_y		5.47				5.51				5.52			
r_y, in.		2.47				2.43				2.39			

[c] Shape is slender for compression with F_y = 50 ksi.

Note: Heavy line indicates KL/r_y equal to or greater than 200.

F_y = 50 ksi

Table 6-1 (continued)
Combined Flexure and Axial Force
W-Shapes

W33-W30

Shape		W33×				W30×							
		118[c,v]				391[b]				357[b]			
Design		$p \times 10^3$ (kips)$^{-1}$		$b_x \times 10^3$ (kip-ft)$^{-1}$		$p \times 10^3$ (kips)$^{-1}$		$b_x \times 10^3$ (kip-ft)$^{-1}$		$p \times 10^3$ (kips)$^{-1}$		$b_x \times 10^3$ (kip-ft)$^{-1}$	
		ASD	LRFD	ASD	LRFD	ASD	LRFD	ASD	LRFD	ASD	LRFD	ASD	LRFD
Effective length, KL (ft), with respect to least radius of gyration, r_y, or Unbraced Length, L_b (ft), for X-X axis bending	0	1.11	0.738	0.858	0.571	0.290	0.193	0.246	0.163	0.318	0.212	0.270	0.180
	11	1.32	0.879	0.926	0.616	0.319	0.212	0.246	0.163	0.350	0.233	0.270	0.180
	12	1.37	0.910	0.952	0.634	0.325	0.216	0.246	0.163	0.357	0.237	0.270	0.180
	13	1.42	0.946	0.980	0.652	0.331	0.221	0.246	0.164	0.364	0.242	0.270	0.180
	14	1.48	0.988	1.01	0.672	0.339	0.225	0.248	0.165	0.372	0.247	0.273	0.182
	15	1.56	1.03	1.04	0.693	0.346	0.230	0.250	0.166	0.380	0.253	0.276	0.183
	16	1.64	1.09	1.08	0.716	0.355	0.236	0.252	0.168	0.390	0.259	0.278	0.185
	17	1.73	1.15	1.11	0.740	0.364	0.242	0.255	0.169	0.400	0.266	0.281	0.187
	18	1.84	1.22	1.15	0.765	0.374	0.249	0.257	0.171	0.412	0.274	0.284	0.189
	19	1.96	1.31	1.19	0.793	0.385	0.256	0.259	0.172	0.424	0.282	0.287	0.191
	20	2.11	1.40	1.24	0.822	0.397	0.264	0.262	0.174	0.437	0.291	0.290	0.193
	22	2.48	1.65	1.34	0.888	0.424	0.282	0.267	0.177	0.467	0.311	0.296	0.197
	24	2.95	1.97	1.48	0.984	0.456	0.303	0.272	0.181	0.503	0.334	0.302	0.201
	26	3.47	2.31	1.70	1.13	0.493	0.328	0.277	0.184	0.544	0.362	0.308	0.205
	28	4.02	2.68	1.92	1.28	0.536	0.357	0.282	0.188	0.593	0.395	0.315	0.210
	30	4.62	3.07	2.16	1.44	0.587	0.391	0.288	0.192	0.650	0.433	0.322	0.215
	32	5.25	3.49	2.40	1.59	0.647	0.430	0.294	0.196	0.718	0.478	0.330	0.220
	34	5.93	3.95	2.64	1.76	0.717	0.477	0.300	0.200	0.797	0.530	0.338	0.225
	36	6.65	4.42	2.89	1.92	0.802	0.533	0.307	0.204	0.892	0.594	0.346	0.230
	38	7.41	4.93	3.14	2.09	0.893	0.594	0.314	0.209	0.994	0.662	0.355	0.236
	40					0.990	0.658	0.321	0.213	1.10	0.733	0.364	0.242
	42					1.09	0.726	0.328	0.218	1.21	0.808	0.373	0.248
	44					1.20	0.797	0.336	0.224	1.33	0.887	0.383	0.255
	46					1.31	0.871	0.344	0.229	1.46	0.969	0.394	0.262
	48					1.43	0.948	0.353	0.235	1.59	1.06	0.405	0.270
	50					1.55	1.03	0.362	0.241	1.72	1.15	0.417	0.278
Other Constants and Properties													
$b_y \times 10^3$, (kip-ft)$^{-1}$		6.94		4.62		1.15		0.765		1.28		0.850	
$t_y \times 10^3$, (kips)$^{-1}$		0.963		0.640		0.290		0.193		0.318		0.212	
$t_r \times 10^3$, (kips)$^{-1}$		1.18		0.788		0.357		0.238		0.391		0.260	
r_x/r_y		5.60				3.65				3.65			
r_y, in.		3.32				3.67				3.64			

[c] Shape is slender for compression with F_y = 50 ksi.
[b] Flange thickness greater than 2 in. Special requirements may apply per AISC *Specification* Section A3.1c.
[v] Shape does not meet the h/t_w limit for shear in AISC *Specification* Section G2.1(a) with F_y = 50 ksi; therefore, ϕ_v = 0.90 and Ω_v = 1.67.
Note: Heavy line indicates KL/r_y equal to or greater than 200.

Table 6-1 (continued)
Combined Flexure and Axial Force
W-Shapes

F_y = 50 ksi

W30

Shape		W30×											
		326[b]				292				261			
Design		$p \times 10^3$ (kips)$^{-1}$		$b_x \times 10^3$ (kip-ft)$^{-1}$		$p \times 10^3$ (kips)$^{-1}$		$b_x \times 10^3$ (kip-ft)$^{-1}$		$p \times 10^3$ (kips)$^{-1}$		$b_x \times 10^3$ (kip-ft)$^{-1}$	
		ASD	LRFD	ASD	LRFD	ASD	LRFD	ASD	LRFD	ASD	LRFD	ASD	LRFD
Effective length, KL (ft), with respect to least radius of gyration, r_y, or Unbraced Length, L_b (ft), for X-X axis bending	0	0.348	0.232	0.299	0.199	0.388	0.258	0.336	0.224	0.434	0.289	0.378	0.251
	11	0.384	0.256	0.299	0.199	0.429	0.285	0.336	0.224	0.480	0.320	0.378	0.251
	12	0.392	0.260	0.299	0.199	0.437	0.291	0.336	0.224	0.490	0.326	0.378	0.251
	13	0.400	0.266	0.300	0.200	0.446	0.297	0.337	0.225	0.500	0.333	0.380	0.253
	14	0.408	0.272	0.303	0.202	0.456	0.304	0.341	0.227	0.512	0.341	0.385	0.256
	15	0.418	0.278	0.307	0.204	0.467	0.311	0.345	0.230	0.525	0.349	0.390	0.260
	16	0.429	0.285	0.310	0.206	0.479	0.319	0.349	0.232	0.539	0.358	0.395	0.263
	17	0.440	0.293	0.313	0.208	0.492	0.328	0.353	0.235	0.554	0.368	0.400	0.266
	18	0.453	0.301	0.317	0.211	0.507	0.337	0.358	0.238	0.570	0.379	0.406	0.270
	19	0.467	0.311	0.320	0.213	0.522	0.348	0.362	0.241	0.586	0.392	0.411	0.274
	20	0.482	0.321	0.324	0.215	0.539	0.359	0.366	0.244	0.608	0.405	0.417	0.277
	22	0.516	0.343	0.331	0.220	0.578	0.385	0.376	0.250	0.653	0.434	0.429	0.285
	24	0.556	0.370	0.339	0.225	0.623	0.415	0.385	0.256	0.706	0.470	0.441	0.294
	26	0.603	0.401	0.347	0.231	0.677	0.450	0.396	0.263	0.768	0.511	0.454	0.302
	28	0.658	0.438	0.355	0.236	0.740	0.492	0.406	0.270	0.841	0.560	0.468	0.312
	30	0.724	0.481	0.364	0.242	0.813	0.541	0.418	0.278	0.928	0.617	0.483	0.322
	32	0.800	0.532	0.373	0.248	0.901	0.599	0.430	0.286	1.03	0.686	0.499	0.332
	34	0.891	0.593	0.383	0.255	1.00	0.669	0.443	0.295	1.15	0.768	0.516	0.343
	36	0.999	0.665	0.393	0.262	1.13	0.749	0.456	0.304	1.29	0.861	0.534	0.356
	38	1.11	0.741	0.404	0.269	1.26	0.835	0.471	0.313	1.44	0.959	0.554	0.368
	40	1.23	0.821	0.416	0.277	1.39	0.925	0.486	0.323	1.60	1.06	0.575	0.382
	42	1.36	0.905	0.428	0.285	1.53	1.02	0.502	0.334	1.76	1.17	0.597	0.398
	44	1.49	0.993	0.441	0.293	1.68	1.12	0.520	0.346	1.93	1.29	0.626	0.416
	46	1.63	1.09	0.454	0.302	1.84	1.22	0.539	0.358	2.11	1.41	0.662	0.440
	48	1.78	1.18	0.469	0.312	2.00	1.33	0.564	0.375	2.30	1.53	0.698	0.464
	50	1.93	1.28	0.485	0.322	2.17	1.45	0.592	0.394	2.50	1.66	0.734	0.488
Other Constants and Properties													
$b_y \times 10^3$, (kip-ft)$^{-1}$		1.41		0.941		1.60		1.06		1.82		1.21	
$t_y \times 10^3$, (kips)$^{-1}$		0.348		0.232		0.388		0.258		0.434		0.289	
$t_r \times 10^3$, (kips)$^{-1}$		0.428		0.285		0.477		0.318		0.533		0.355	
r_x/r_y		3.67				3.69				3.71			
r_y, in.		3.60				3.58				3.53			

[b] Flange thickness greater than 2 in. Special requirements may apply per AISC *Specification* Section A3.1c.

Table 6-1 (continued)
Combined Flexure and Axial Force
W-Shapes

F_y = 50 ksi

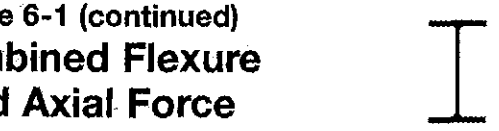

W30

Shape		W30×											
		235				211				191[c]			
Design		$p \times 10^3$ (kips)$^{-1}$		$b_x \times 10^3$ (kip-ft)$^{-1}$		$p \times 10^3$ (kips)$^{-1}$		$b_x \times 10^3$ (kip-ft)$^{-1}$		$p \times 10^3$ (kips)$^{-1}$		$b_x \times 10^3$ (kip-ft)$^{-1}$	
		ASD	LRFD	ASD	LRFD	ASD	LRFD	ASD	LRFD	ASD	LRFD	ASD	LRFD
Effective length, KL (ft), with respect to least radius of gyration, r_y, or Unbraced Length, L_b (ft), for X-X axis bending	0	0.482	0.321	0.421	0.280	0.536	0.357	0.474	0.316	0.604	0.402	0.528	0.351
	11	0.534	0.356	0.421	0.280	0.595	0.396	0.474	0.316	0.663	0.441	0.528	0.351
	12	0.545	0.363	0.421	0.280	0.607	0.404	0.474	0.316	0.676	0.450	0.528	0.351
	13	0.557	0.370	0.424	0.282	0.620	0.413	0.479	0.319	0.691	0.460	0.534	0.355
	14	0.570	0.379	0.430	0.286	0.635	0.423	0.486	0.323	0.707	0.471	0.543	0.361
	15	0.584	0.389	0.436	0.290	0.651	0.433	0.493	0.328	0.726	0.483	0.551	0.367
	16	0.600	0.399	0.442	0.294	0.669	0.445	0.501	0.333	0.746	0.496	0.560	0.373
	17	0.617	0.411	0.448	0.298	0.688	0.458	0.509	0.338	0.768	0.511	0.570	0.379
	18	0.636	0.423	0.455	0.302	0.709	0.472	0.517	0.344	0.792	0.527	0.579	0.385
	19	0.656	0.437	0.461	0.307	0.732	0.487	0.525	0.349	0.818	0.544	0.589	0.392
	20	0.678	0.451	0.468	0.311	0.758	0.504	0.533	0.355	0.846	0.563	0.599	0.399
	22	0.729	0.485	0.483	0.321	0.815	0.542	0.551	0.367	0.911	0.606	0.621	0.413
	24	0.788	0.525	0.498	0.331	0.882	0.587	0.570	0.379	0.988	0.657	0.644	0.429
	26	0.859	0.571	0.514	0.342	0.962	0.640	0.591	0.393	1.08	0.718	0.669	0.445
	28	0.942	0.627	0.531	0.354	1.06	0.702	0.613	0.408	1.19	0.789	0.696	0.463
	30	1.04	0.692	0.550	0.366	1.17	0.777	0.636	0.423	1.31	0.874	0.726	0.483
	32	1.16	0.769	0.570	0.379	1.30	0.864	0.662	0.440	1.47	0.975	0.758	0.504
	34	1.30	0.863	0.591	0.393	1.46	0.971	0.690	0.459	1.65	1.10	0.793	0.527
	36	1.45	0.968	0.614	0.409	1.64	1.09	0.720	0.479	1.85	1.23	0.831	0.553
	38	1.62	1.08	0.639	0.425	1.83	1.21	0.753	0.501	2.06	1.37	0.889	0.591
	40	1.80	1.19	0.666	0.443	2.02	1.34	0.802	0.533	2.28	1.52	0.957	0.637
	42	1.98	1.32	0.704	0.468	2.23	1.48	0.858	0.571	2.52	1.67	1.03	0.683
	44	2.17	1.45	0.748	0.498	2.44	1.63	0.914	0.608	2.76	1.84	1.10	0.729
	46	2.37	1.58	0.792	0.527	2.67	1.78	0.970	0.645	3.02	2.01	1.16	0.775
	48	2.59	1.72	0.837	0.557	2.91	1.94	1.03	0.683	3.29	2.19	1.23	0.821
	50	2.81	1.87	0.881	0.586	3.16	2.10	1.08	0.720	3.57	2.37	1.30	0.867
Other Constants and Properties													
$b_y \times 10^3$, (kip-ft)$^{-1}$		2.04		1.35		2.30		1.53		2.58		1.72	
$t_y \times 10^3$, (kips)$^{-1}$		0.482		0.321		0.536		0.357		0.595		0.396	
$t_r \times 10^3$, (kips)$^{-1}$		0.592		0.395		0.659		0.439		0.731		0.488	
r_x/r_y		3.70				3.70				3.70			
r_y, in.		3.51				3.49				3.46			

[c] Shape is slender for compression with F_y = 50 ksi.

W30

Table 6-1 (continued)
Combined Flexure and Axial Force
W-Shapes

F_y = 50 ksi

Shape		W30×											
		173[c]				148[c]				132[c]			
Design		$p \times 10^3$ (kips)$^{-1}$		$b_x \times 10^3$ (kip-ft)$^{-1}$		$p \times 10^3$ (kips)$^{-1}$		$b_x \times 10^3$ (kip-ft)$^{-1}$		$p \times 10^3$ (kips)$^{-1}$		$b_x \times 10^3$ (kip-ft)$^{-1}$	
		ASD	LRFD	ASD	LRFD	ASD	LRFD	ASD	LRFD	ASD	LRFD	ASD	LRFD
Effective length, KL (ft), with respect to least radius of gyration, r_y, or Unbraced Length, L_b (ft), for X-X axis bending	0	0.678	0.451	0.587	0.391	0.801	0.533	0.713	0.474	0.917	0.610	0.815	0.542
	11	0.745	0.495	0.587	0.391	0.986	0.656	0.765	0.509	1.13	0.751	0.882	0.587
	12	0.758	0.505	0.587	0.391	1.03	0.684	0.784	0.522	1.18	0.783	0.906	0.603
	13	0.773	0.515	0.596	0.396	1.08	0.718	0.804	0.535	1.23	0.819	0.931	0.620
	14	0.790	0.526	0.606	0.403	1.14	0.758	0.826	0.550	1.30	0.862	0.958	0.638
	15	0.809	0.538	0.616	0.410	1.21	0.804	0.849	0.565	1.37	0.915	0.987	0.657
	16	0.829	0.552	0.626	0.417	1.29	0.856	0.873	0.581	1.47	0.975	1.02	0.677
	17	0.852	0.567	0.637	0.424	1.38	0.915	0.898	0.598	1.57	1.04	1.05	0.699
	18	0.878	0.584	0.649	0.432	1.48	0.982	0.925	0.616	1.69	1.12	1.08	0.721
	19	0.908	0.604	0.660	0.439	1.59	1.06	0.954	0.635	1.82	1.21	1.12	0.746
	20	0.941	0.626	0.673	0.447	1.72	1.15	0.984	0.655	1.98	1.32	1.16	0.772
	22	1.01	0.675	0.698	0.465	2.05	1.36	1.05	0.700	2.36	1.57	1.25	0.831
	24	1.10	0.733	0.726	0.483	2.43	1.62	1.13	0.751	2.81	1.87	1.36	0.904
	26	1.21	0.802	0.756	0.503	2.86	1.90	1.25	0.828	3.30	2.19	1.54	1.02
	28	1.33	0.884	0.789	0.525	3.31	2.20	1.39	0.923	3.82	2.54	1.72	1.15
	30	1.48	0.982	0.825	0.549	3.80	2.53	1.53	1.02	4.39	2.92	1.91	1.27
	32	1.65	1.10	0.864	0.575	4.33	2.88	1.67	1.11	4.99	3.32	2.09	1.39
	34	1.86	1.24	0.906	0.603	4.89	3.25	1.82	1.21	5.64	3.75	2.28	1.52
	36	2.09	1.39	0.964	0.641	5.48	3.64	1.96	1.30	6.32	4.21	2.47	1.64
	38	2.32	1.55	1.05	0.696								
	40	2.57	1.71	1.13	0.751								
	42	2.84	1.89	1.21	0.807								
	44	3.12	2.07	1.30	0.863								
	46	3.41	2.27	1.38	0.919								
	48	3.71	2.47	1.47	0.976								
	50	4.02	2.68	1.55	1.03								
Other Constants and Properties													
$b_y \times 10^3$, (kip-ft)$^{-1}$		2.90		1.93		5.24		3.49		6.10		4.06	
$t_y \times 10^3$, (kips)$^{-1}$		0.656		0.437		0.766		0.510		0.861		0.573	
$t_r \times 10^3$, (kips)$^{-1}$		0.806		0.537		0.941		0.627		1.06		0.705	
r_x/r_y		3.71				5.44				5.42			
r_y, in.		3.42				2.28				2.25			

[c] Shape is slender for compression with F_y = 50 ksi.

Note: Heavy line indicates KL/r_y equal to or greater than 200.

F_y = 50 ksi

Table 6-1 (continued)
Combined Flexure and Axial Force
W-Shapes

Shape		W30×											
		124[c]				116[c]				108[c]			
Design		$p \times 10^3$ (kips)$^{-1}$		$b_x \times 10^3$ (kip-ft)$^{-1}$		$p \times 10^3$ (kips)$^{-1}$		$b_x \times 10^3$ (kip-ft)$^{-1}$		$p \times 10^3$ (kips)$^{-1}$		$b_x \times 10^3$ (kip-ft)$^{-1}$	
		ASD	LRFD	ASD	LRFD	ASD	LRFD	ASD	LRFD	ASD	LRFD	ASD	LRFD
Effective length, KL (ft), with respect to least radius of gyration, r_y, or Unbraced Length, L_b (ft), for X-X axis bending	0	0.991	0.659	0.873	0.581	1.07	0.713	0.943	0.627	1.17	0.782	1.03	0.685
	11	1.22	0.811	0.949	0.631	1.32	0.880	1.03	0.686	1.45	0.968	1.14	0.755
	12	1.27	0.845	0.976	0.649	1.38	0.918	1.06	0.706	1.52	1.01	1.17	0.779
	13	1.33	0.885	1.00	0.668	1.45	0.962	1.09	0.728	1.59	1.06	1.21	0.804
	14	1.40	0.931	1.03	0.688	1.52	1.01	1.13	0.750	1.68	1.12	1.25	0.830
	15	1.48	0.984	1.07	0.710	1.61	1.07	1.16	0.775	1.78	1.18	1.29	0.859
	16	1.57	1.05	1.10	0.732	1.72	1.14	1.20	0.801	1.90	1.26	1.34	0.889
	17	1.69	1.12	1.14	0.757	1.84	1.23	1.24	0.828	2.04	1.35	1.39	0.922
	18	1.82	1.21	1.18	0.782	1.99	1.32	1.29	0.858	2.20	1.47	1.44	0.957
	19	1.97	1.31	1.22	0.810	2.16	1.44	1.34	0.890	2.40	1.60	1.50	0.995
	20	2.13	1.42	1.26	0.840	2.35	1.56	1.39	0.924	2.62	1.74	1.56	1.04
	22	2.55	1.70	1.36	0.907	2.83	1.88	1.51	1.00	3.16	2.11	1.70	1.13
	24	3.04	2.02	1.51	1.01	3.36	2.24	1.70	1.13	3.77	2.51	1.96	1.31
	26	3.57	2.37	1.72	1.14	3.95	2.63	1.94	1.29	4.42	2.94	2.24	1.49
	28	4.14	2.75	1.92	1.28	4.58	3.05	2.18	1.45	5.13	3.41	2.52	1.68
	30	4.75	3.16	2.13	1.42	5.26	3.50	2.42	1.61	5.88	3.91	2.81	1.87
	32	5.40	3.60	2.35	1.56	5.98	3.98	2.67	1.78	6.69	4.45	3.10	2.06
	34	6.10	4.06	2.56	1.70	6.75	4.49	2.92	1.94	7.56	5.03	3.40	2.26
	36	6.84	4.55	2.78	1.85	7.57	5.04	3.17	2.11				
Other Constants and Properties													
$b_y \times 10^3$, (kip-ft)$^{-1}$		6.60		4.39		7.24		4.82		8.12		5.40	
$t_y \times 10^3$, (kips)$^{-1}$		0.915		0.609		0.977		0.650		1.05		0.701	
$t_r \times 10^3$, (kips)$^{-1}$		1.12		0.749		1.20		0.800		1.29		0.863	
r_x/r_y		5.43				5.48				5.53			
r_y, in.		2.23				2.19				2.15			

[c] Shape is slender for compression with F_y = 50 ksi.

Note: Heavy line indicates KL/r_y equal to or greater than 200.

W30-W27

Table 6-1 (continued)
Combined Flexure and Axial Force
W-Shapes

F_y = 50 ksi

Shape		W30×								W27×			
		99[c]				90[c,v]				539[b]			
Design		$p \times 10^3$ (kips)$^{-1}$		$b_x \times 10^3$ (kip-ft)$^{-1}$		$p \times 10^3$ (kips)$^{-1}$		$b_x \times 10^3$ (kip-ft)$^{-1}$		$p \times 10^3$ (kips)$^{-1}$		$b_x \times 10^3$ (kip-ft)$^{-1}$	
		ASD	LRFD	ASD	LRFD	ASD	LRFD	ASD	LRFD	ASD	LRFD	ASD	LRFD
Effective length, KL (ft), with respect to least radius of gyration, r_y, or Unbraced Length, L_b (ft), for X-X axis bending	0	1.31	0.872	1.14	0.760	1.49	0.994	1.26	0.838	0.210	0.140	0.189	0.125
	11	1.63	1.08	1.27	0.846	1.85	1.23	1.41	0.936	0.231	0.154	0.189	0.125
	12	1.70	1.13	1.31	0.874	1.93	1.28	1.45	0.968	0.235	0.157	0.189	0.125
	13	1.79	1.19	1.36	0.903	2.02	1.35	1.51	1.00	0.240	0.160	0.189	0.125
	14	1.89	1.26	1.41	0.935	2.13	1.42	1.56	1.04	0.245	0.163	0.190	0.126
	15	2.01	1.33	1.46	0.969	2.26	1.50	1.62	1.08	0.251	0.167	0.191	0.127
	16	2.14	1.43	1.51	1.01	2.41	1.60	1.68	1.12	0.257	0.171	0.192	0.128
	17	2.30	1.53	1.57	1.04	2.59	1.72	1.75	1.16	0.264	0.176	0.193	0.128
	18	2.50	1.66	1.63	1.09	2.79	1.86	1.82	1.21	0.271	0.181	0.194	0.129
	19	2.73	1.81	1.70	1.13	3.04	2.02	1.90	1.27	0.279	0.186	0.195	0.130
	20	3.00	1.99	1.78	1.18	3.34	2.22	1.99	1.32	0.288	0.192	0.196	0.131
	22	3.63	2.41	2.00	1.33	4.04	2.69	2.28	1.52	0.308	0.205	0.199	0.132
	24	4.31	2.87	2.32	1.54	4.80	3.20	2.65	1.76	0.331	0.220	0.201	0.134
	26	5.06	3.37	2.65	1.76	5.64	3.75	3.04	2.02	0.358	0.238	0.203	0.135
	28	5.87	3.91	2.99	1.99	6.54	4.35	3.44	2.29	0.390	0.260	0.206	0.137
	30	6.74	4.49	3.34	2.22	7.51	4.99	3.85	2.56	0.428	0.285	0.208	0.139
	32	7.67	5.10	3.69	2.46	8.54	5.68	4.27	2.84	0.472	0.314	0.211	0.140
	34	8.66	5.76	4.06	2.70	9.64	6.41	4.70	3.13	0.524	0.348	0.213	0.142
	36									0.586	0.390	0.216	0.144
	38									0.653	0.435	0.219	0.146
	40									0.724	0.481	0.222	0.148
	42									0.798	0.531	0.225	0.149
	44									0.876	0.583	0.228	0.151
	46									0.957	0.637	0.231	0.154
	48									1.04	0.693	0.234	0.156
	50									1.13	0.752	0.237	0.158
Other Constants and Properties													
$b_y \times 10^3$, (kip-ft)$^{-1}$		9.23		6.14		10.3		6.83		0.815		0.542	
$t_y \times 10^3$, (kips)$^{-1}$		1.15		0.766		1.27		0.845		0.210		0.140	
$t_r \times 10^3$, (kips)$^{-1}$		1.41		0.943		1.56		1.04		0.258		0.172	
r_x/r_y		5.57				5.60				3.48			
r_y, in.		2.10				2.09				3.65			

[c] Shape is slender for compression with F_y = 50 ksi.
[b] Flange thickness greater than 2 in. Special requirements may apply per AISC *Specification* Section A3.1c.
[v] Shape does not meet the h/t_w limit for shear in AISC *Specification* Section G2.1(a) with F_y = 50 ksi; therefore, ϕ_v = 0.90 and Ω_v = 1.67.
Note: Heavy line indicates KL/r_y equal to or greater than 200.

Table 6-1 (continued)
Combined Flexure and Axial Force
W-Shapes

F_y = 50 ksi

W27

Shape		W27×											
		368[h]				336[h]				307[h]			
Design		$p \times 10^3$ (kips)$^{-1}$		$b_x \times 10^3$ (kip-ft)$^{-1}$		$p \times 10^3$ (kips)$^{-1}$		$b_x \times 10^3$ (kip-ft)$^{-1}$		$p \times 10^3$ (kips)$^{-1}$		$b_x \times 10^3$ (kip-ft)$^{-1}$	
		ASD	LRFD	ASD	LRFD	ASD	LRFD	ASD	LRFD	ASD	LRFD	ASD	LRFD
Effective length, KL (ft), with respect to least radius of gyration, r_y, or Unbraced Length, L_b (ft), for X-X axis bending	0	0.306	0.204	0.287	0.191	0.337	0.224	0.315	0.210	0.370	0.246	0.346	0.230
	11	0.340	0.226	0.287	0.191	0.375	0.249	0.315	0.210	0.413	0.275	0.346	0.230
	12	0.347	0.231	0.287	0.191	0.382	0.254	0.315	0.210	0.422	0.281	0.346	0.230
	13	0.355	0.236	0.289	0.192	0.391	0.260	0.318	0.211	0.432	0.287	0.349	0.232
	14	0.363	0.242	0.291	0.194	0.400	0.266	0.320	0.213	0.442	0.294	0.353	0.235
	15	0.373	0.248	0.294	0.195	0.411	0.273	0.323	0.215	0.454	0.302	0.356	0.237
	16	0.383	0.255	0.296	0.197	0.422	0.281	0.326	0.217	0.467	0.311	0.360	0.239
	17	0.394	0.262	0.299	0.199	0.435	0.289	0.329	0.219	0.481	0.320	0.364	0.242
	18	0.406	0.270	0.301	0.200	0.448	0.298	0.332	0.221	0.497	0.330	0.367	0.244
	19	0.419	0.279	0.304	0.202	0.463	0.308	0.336	0.223	0.513	0.342	0.371	0.247
	20	0.434	0.289	0.306	0.204	0.480	0.319	0.339	0.225	0.532	0.354	0.375	0.250
	22	0.467	0.311	0.312	0.207	0.517	0.344	0.345	0.230	0.574	0.382	0.383	0.255
	24	0.506	0.336	0.317	0.211	0.560	0.373	0.352	0.234	0.624	0.415	0.392	0.261
	26	0.552	0.367	0.323	0.215	0.612	0.407	0.359	0.239	0.683	0.454	0.401	0.267
	28	0.606	0.403	0.329	0.219	0.674	0.448	0.367	0.244	0.753	0.501	0.410	0.273
	30	0.670	0.446	0.335	0.223	0.746	0.497	0.375	0.249	0.836	0.557	0.420	0.279
	32	0.746	0.497	0.342	0.227	0.833	0.554	0.383	0.255	0.936	0.623	0.430	0.286
	34	0.839	0.558	0.348	0.232	0.938	0.624	0.391	0.260	1.06	0.703	0.441	0.293
	36	0.941	0.626	0.355	0.236	1.05	0.700	0.400	0.266	1.18	0.788	0.452	0.301
	38	1.05	0.697	0.363	0.241	1.17	0.780	0.409	0.272	1.32	0.878	0.464	0.309
	40	1.16	0.773	0.370	0.246	1.30	0.864	0.419	0.279	1.46	0.972	0.476	0.317
	42	1.28	0.852	0.378	0.252	1.43	0.952	0.429	0.285	1.61	1.07	0.490	0.326
	44	1.41	0.935	0.386	0.257	1.57	1.05	0.439	0.292	1.77	1.18	0.504	0.335
	46	1.54	1.02	0.395	0.263	1.72	1.14	0.451	0.300	1.93	1.29	0.518	0.345
	48	1.67	1.11	0.404	0.269	1.87	1.24	0.462	0.308	2.10	1.40	0.534	0.355
	50	1.81	1.21	0.413	0.275	2.03	1.35	0.475	0.316	2.28	1.52	0.551	0.367
Other Constants and Properties													
$b_y \times 10^3$, (kip-ft)$^{-1}$		1.28		0.850		1.41		0.941		1.57		1.04	
$t_p \times 10^3$, (kips)$^{-1}$		0.306		0.204		0.337		0.224		0.370		0.246	
$t_r \times 10^3$, (kips)$^{-1}$		0.376		0.251		0.414		0.276		0.455		0.303	
r_x/r_y		3.51				3.51				3.52			
r_y, in.		3.48				3.45				3.41			

[h] Flange thickness greater than 2 in. Special requirements may apply per AISC *Specification* Section A3.1c.

W27

Table 6-1 (continued)
Combined Flexure and Axial Force
W-Shapes

F_y = 50 ksi

Shape		W27×											
		281				258				235			
Design		$p \times 10^3$ (kips)$^{-1}$		$b_x \times 10^3$ (kip-ft)$^{-1}$		$p \times 10^3$ (kips)$^{-1}$		$b_x \times 10^3$ (kip-ft)$^{-1}$		$p \times 10^3$ (kips)$^{-1}$		$b_x \times 10^3$ (kip-ft)$^{-1}$	
		ASD	LRFD	ASD	LRFD	ASD	LRFD	ASD	LRFD	ASD	LRFD	ASD	LRFD
Effective length, KL (ft), with respect to least radius of gyration, r_y, or Unbraced Length, L_b (ft), for X-X axis bending	0	0.402	0.267	0.381	0.253	0.439	0.292	0.418	0.278	0.481	0.320	0.461	0.307
	11	0.449	0.299	0.381	0.253	0.491	0.327	0.418	0.278	0.540	0.359	0.461	0.307
	12	0.459	0.305	0.381	0.253	0.502	0.334	0.419	0.279	0.552	0.367	0.463	0.308
	13	0.469	0.312	0.385	0.256	0.514	0.342	0.424	0.282	0.565	0.376	0.469	0.312
	14	0.481	0.320	0.389	0.259	0.527	0.351	0.429	0.285	0.580	0.386	0.475	0.316
	15	0.494	0.329	0.393	0.262	0.541	0.360	0.434	0.289	0.596	0.396	0.481	0.320
	16	0.508	0.338	0.397	0.264	0.557	0.371	0.439	0.292	0.614	0.408	0.487	0.324
	17	0.524	0.348	0.402	0.267	0.575	0.382	0.444	0.296	0.633	0.421	0.494	0.328
	18	0.541	0.360	0.406	0.270	0.594	0.395	0.450	0.299	0.655	0.436	0.500	0.333
	19	0.559	0.372	0.411	0.273	0.615	0.409	0.455	0.303	0.678	0.451	0.507	0.337
	20	0.580	0.386	0.416	0.277	0.637	0.424	0.461	0.307	0.704	0.468	0.514	0.342
	22	0.626	0.417	0.426	0.283	0.689	0.459	0.473	0.315	0.762	0.507	0.529	0.352
	24	0.681	0.453	0.436	0.290	0.751	0.500	0.485	0.323	0.832	0.553	0.544	0.362
	26	0.747	0.497	0.447	0.297	0.824	0.549	0.498	0.332	0.914	0.608	0.560	0.373
	28	0.824	0.548	0.458	0.305	0.912	0.607	0.512	0.341	1.01	0.674	0.578	0.384
	30	0.917	0.610	0.470	0.313	1.02	0.676	0.527	0.351	1.13	0.753	0.596	0.397
	32	1.03	0.683	0.482	0.321	1.14	0.760	0.543	0.361	1.27	0.848	0.616	0.410
	34	1.16	0.772	0.496	0.330	1.29	0.858	0.559	0.372	1.44	0.957	0.637	0.424
	36	1.30	0.865	0.510	0.339	1.45	0.962	0.577	0.384	1.61	1.07	0.660	0.439
	38	1.45	0.964	0.524	0.349	1.61	1.07	0.596	0.396	1.80	1.20	0.684	0.455
	40	1.61	1.07	0.540	0.359	1.78	1.19	0.616	0.410	1.99	1.33	0.710	0.472
	42	1.77	1.18	0.557	0.370	1.97	1.31	0.637	0.424	2.20	1.46	0.738	0.491
	44	1.94	1.29	0.574	0.382	2.16	1.44	0.660	0.439	2.41	1.60	0.776	0.516
	46	2.12	1.41	0.593	0.395	2.36	1.57	0.685	0.456	2.63	1.75	0.818	0.544
	48	2.31	1.54	0.614	0.408	2.57	1.71	0.721	0.479	2.87	1.91	0.861	0.573
	50	2.51	1.67	0.639	0.425	2.79	1.85	0.756	0.503	3.11	2.07	0.904	0.601
Other Constants and Properties													
$b_y \times 10^3$, (kip-ft)$^{-1}$		1.73		1.15		1.91		1.27		2.12		1.41	
$t_y \times 10^3$, (kips)$^{-1}$		0.402		0.267		0.439		0.292		0.481		0.320	
$t_r \times 10^3$, (kips)$^{-1}$		0.494		0.329		0.539		0.359		0.591		0.394	
r_x/r_y		3.54				3.54				3.54			
r_y, in.		3.39				3.36				3.33			

Table 6-1 (continued)
Combined Flexure and Axial Force
W-Shapes

F_y = 50 ksi

Shape		W27×											
		217				194				178			
Design		$p \times 10^3$ (kips)$^{-1}$		$b_x \times 10^3$ (kip-ft)$^{-1}$		$p \times 10^3$ (kips)$^{-1}$		$b_x \times 10^3$ (kip-ft)$^{-1}$		$p \times 10^3$ (kips)$^{-1}$		$b_x \times 10^3$ (kip-ft)$^{-1}$	
		ASD	LRFD	ASD	LRFD	ASD	LRFD	ASD	LRFD	ASD	LRFD	ASD	LRFD
Effective length, KL (ft), with respect to least radius of gyration, r_y, or unbraced Length, L_b (ft), for X-X axis bending	0	0.523	0.348	0.501	0.333	0.585	0.389	0.565	0.376	0.636	0.423	0.625	0.416
	11	0.587	0.390	0.501	0.333	0.658	0.438	0.565	0.376	0.718	0.478	0.625	0.416
	12	0.600	0.399	0.503	0.335	0.673	0.448	0.568	0.378	0.734	0.489	0.630	0.419
	13	0.614	0.409	0.510	0.339	0.689	0.459	0.576	0.383	0.753	0.501	0.640	0.426
	14	0.630	0.419	0.517	0.344	0.708	0.471	0.584	0.389	0.773	0.515	0.650	0.432
	15	0.648	0.431	0.524	0.348	0.728	0.484	0.593	0.395	0.796	0.530	0.661	0.439
	16	0.667	0.444	0.531	0.353	0.750	0.499	0.602	0.401	0.821	0.546	0.671	0.447
	17	0.689	0.458	0.538	0.358	0.775	0.516	0.612	0.407	0.849	0.565	0.683	0.454
	18	0.712	0.474	0.546	0.363	0.802	0.533	0.621	0.413	0.879	0.585	0.694	0.462
	19	0.738	0.491	0.554	0.369	0.831	0.553	0.631	0.420	0.912	0.607	0.706	0.470
	20	0.766	0.510	0.562	0.374	0.863	0.574	0.641	0.427	0.948	0.631	0.718	0.478
	22	0.830	0.552	0.579	0.385	0.937	0.623	0.663	0.441	1.03	0.686	0.745	0.495
	24	0.906	0.603	0.597	0.398	1.02	0.682	0.686	0.456	1.13	0.752	0.773	0.514
	26	0.997	0.663	0.617	0.410	1.13	0.751	0.711	0.473	1.25	0.830	0.803	0.534
	28	1.11	0.735	0.637	0.424	1.25	0.834	0.737	0.490	1.39	0.925	0.836	0.556
	30	1.23	0.822	0.660	0.439	1.40	0.934	0.766	0.509	1.56	1.04	0.871	0.580
	32	1.39	0.927	0.683	0.455	1.59	1.06	0.797	0.530	1.77	1.18	0.910	0.606
	34	1.57	1.05	0.709	0.471	1.79	1.19	0.830	0.552	2.00	1.33	0.952	0.634
	36	1.76	1.17	0.736	0.490	2.01	1.34	0.867	0.577	2.24	1.49	1.00	0.665
	38	1.96	1.31	0.766	0.509	2.24	1.49	0.906	0.603	2.49	1.66	1.07	0.713
	40	2.18	1.45	0.798	0.531	2.48	1.65	0.968	0.644	2.76	1.84	1.15	0.765
	42	2.40	1.60	0.842	0.560	2.73	1.82	1.03	0.687	3.05	2.03	1.23	0.817
	44	2.63	1.75	0.892	0.593	3.00	2.00	1.10	0.729	3.34	2.23	1.31	0.869
	46	2.88	1.91	0.942	0.627	3.28	2.18	1.16	0.771	3.66	2.43	1.38	0.920
	48	3.13	2.09	0.992	0.660	3.57	2.38	1.22	0.813	3.98	2.65	1.46	0.972
	50	3.40	2.26	1.04	0.693	3.88	2.58	1.29	0.855	4.32	2.87	1.54	1.02
Other Constants and Properties													
$b_y \times 10^3$, (kip-ft)$^{-1}$		2.31		1.54		2.62		1.74		2.92		1.94	
$t_y \times 10^3$, (kips)$^{-1}$		0.523		0.348		0.585		0.389		0.636		0.423	
$t_r \times 10^3$, (kips)$^{-1}$		0.642		0.428		0.718		0.479		0.781		0.521	
r_x/r_y		3.55				3.56				3.57			
r_y, in.		3.32				3.29				3.25			

W27

Table 6-1 (continued)
Combined Flexure and Axial Force
W-Shapes

F_y = 50 ksi

Shape		W27×											
		161[c]				146[c]				129[c]			
Design		$p \times 10^3$ (kips)$^{-1}$		$b_x \times 10^3$ (kip-ft)$^{-1}$		$p \times 10^3$ (kips)$^{-1}$		$b_x \times 10^3$ (kip-ft)$^{-1}$		$p \times 10^3$ (kips)$^{-1}$		$b_x \times 10^3$ (kip-ft)$^{-1}$	
		ASD	LRFD	ASD	LRFD	ASD	LRFD	ASD	LRFD	ASD	LRFD	ASD	LRFD
Effective length, KL (ft), with respect to least radius of gyration, r_y, or Unbraced Length, L_b (ft), for X-X axis bending	0	0.704	0.468	0.692	0.460	0.792	0.527	0.768	0.511	0.910	0.606	0.902	0.600
	11	0.793	0.527	0.692	0.460	0.883	0.587	0.768	0.511	1.15	0.763	0.976	0.649
	12	0.811	0.540	0.698	0.465	0.901	0.600	0.777	0.517	1.21	0.802	1.00	0.666
	13	0.832	0.554	0.710	0.472	0.922	0.614	0.791	0.526	1.27	0.846	1.03	0.684
	14	0.855	0.569	0.722	0.480	0.946	0.629	0.805	0.535	1.35	0.897	1.06	0.703
	15	0.881	0.586	0.735	0.489	0.974	0.648	0.819	0.545	1.44	0.955	1.09	0.723
	16	0.909	0.604	0.747	0.497	1.01	0.669	0.835	0.555	1.53	1.02	1.12	0.744
	17	0.939	0.625	0.761	0.506	1.04	0.692	0.850	0.566	1.65	1.10	1.15	0.767
	18	0.973	0.647	0.775	0.515	1.08	0.718	0.867	0.577	1.78	1.18	1.19	0.791
	19	1.01	0.672	0.789	0.525	1.12	0.746	0.884	0.588	1.92	1.28	1.23	0.816
	20	1.05	0.699	0.804	0.535	1.17	0.776	0.901	0.600	2.09	1.39	1.27	0.843
	22	1.14	0.761	0.835	0.556	1.27	0.846	0.939	0.625	2.51	1.67	1.36	0.903
	24	1.25	0.835	0.869	0.578	1.40	0.930	0.980	0.652	2.99	1.99	1.46	0.973
	26	1.39	0.924	0.906	0.603	1.55	1.03	1.02	0.681	3.51	2.33	1.64	1.09
	28	1.55	1.03	0.946	0.630	1.73	1.15	1.07	0.714	4.07	2.71	1.82	1.21
	30	1.74	1.16	0.990	0.659	1.95	1.30	1.13	0.750	4.67	3.11	2.00	1.33
	32	1.98	1.31	1.04	0.691	2.22	1.48	1.19	0.789	5.31	3.54	2.18	1.45
	34	2.23	1.48	1.09	0.726	2.50	1.67	1.27	0.843	6.00	3.99	2.36	1.57
	36	2.50	1.66	1.17	0.781	2.81	1.87	1.38	0.919	6.73	4.47	2.54	1.69
	38	2.79	1.85	1.27	0.844	3.13	2.08	1.50	0.995				
	40	3.09	2.05	1.36	0.907	3.47	2.31	1.61	1.07				
	42	3.40	2.26	1.46	0.970	3.82	2.54	1.73	1.15				
	44	3.73	2.48	1.55	1.03	4.19	2.79	1.84	1.23				
	46	4.08	2.72	1.65	1.10	4.58	3.05	1.96	1.30				
	48	4.44	2.96	1.74	1.16	4.99	3.32	2.07	1.38				
	50	4.82	3.21	1.84	1.22	5.41	3.60	2.19	1.46				
Other Constants and Properties													
$b_y \times 10^3$, (kip-ft)$^{-1}$		3.27		2.17		3.65		2.43		6.19		4.12	
$t_y \times 10^3$, (kips)$^{-1}$		0.702		0.467		0.773		0.514		0.884		0.588	
$t_r \times 10^3$, (kips)$^{-1}$		0.862		0.575		0.950		0.633		1.09		0.724	
r_x/r_y		3.56				3.59				5.07			
r_y, in.		3.23				3.20				2.21			

[c] Shape is slender for compression with F_y = 50 ksi.

Note: Heavy line indicates KL/r_y equal to or greater than 200.

F_y = 50 ksi

Table 6-1 (continued)
Combined Flexure and Axial Force
W-Shapes

W27

Shape		W27×											
		114[c]				102[c]				94[c]			
Design		$p \times 10^3$ (kips)$^{-1}$		$b_x \times 10^3$ (kip-ft)$^{-1}$		$p \times 10^3$ (kips)$^{-1}$		$b_x \times 10^3$ (kip-ft)$^{-1}$		$p \times 10^3$ (kips)$^{-1}$		$b_x \times 10^3$ (kip-ft)$^{-1}$	
		ASD	LRFD	ASD	LRFD	ASD	LRFD	ASD	LRFD	ASD	LRFD	ASD	LRFD
Effective length, KL (ft), with respect to least radius of gyration, r_y, or Unbraced Length, L_b (ft), for X-X axis bending	0	1.05	0.696	1.04	0.691	1.21	0.804	1.17	0.777	1.34	0.890	1.28	0.853
	11	1.31	0.873	1.13	0.754	1.51	1.01	1.28	0.854	1.67	1.11	1.42	0.944
	12	1.37	0.913	1.17	0.775	1.58	1.05	1.32	0.880	1.75	1.17	1.46	0.974
	13	1.45	0.962	1.20	0.798	1.66	1.11	1.36	0.907	1.84	1.23	1.51	1.01
	14	1.53	1.02	1.24	0.822	1.76	1.17	1.41	0.935	1.95	1.30	1.56	1.04
	15	1.64	1.09	1.27	0.847	1.86	1.24	1.45	0.966	2.07	1.38	1.62	1.07
	16	1.75	1.17	1.31	0.874	1.99	1.33	1.50	1.00	2.21	1.47	1.67	1.11
	17	1.89	1.25	1.36	0.903	2.15	1.43	1.55	1.03	2.38	1.58	1.74	1.15
	18	2.04	1.36	1.40	0.934	2.33	1.55	1.61	1.07	2.59	1.72	1.80	1.20
	19	2.21	1.47	1.45	0.967	2.53	1.69	1.67	1.11	2.82	1.88	1.88	1.25
	20	2.41	1.60	1.51	1.00	2.77	1.84	1.74	1.16	3.09	2.06	1.95	1.30
	22	2.90	1.93	1.63	1.08	3.34	2.22	1.89	1.25	3.74	2.49	2.16	1.44
	24	3.46	2.30	1.80	1.20	3.98	2.65	2.15	1.43	4.45	2.96	2.50	1.66
	26	4.06	2.70	2.04	1.36	4.67	3.11	2.44	1.63	5.22	3.47	2.84	1.89
	28	4.70	3.13	2.27	1.51	5.42	3.60	2.74	1.82	6.06	4.03	3.19	2.12
	30	5.40	3.59	2.51	1.67	6.22	4.14	3.03	2.02	6.95	4.62	3.54	2.36
	32	6.14	4.09	2.75	1.83	7.07	4.71	3.33	2.22	7.91	5.26	3.90	2.59
	34	6.94	4.61	2.99	1.99	7.99	5.31	3.63	2.42	8.93	5.94	4.26	2.83
	36	7.78	5.17	3.23	2.15								
Other Constants and Properties													
$b_y \times 10^3$, (kip-ft)$^{-1}$		7.23		4.81		8.21		5.46		9.18		6.11	
$t_y \times 10^3$, (kips)$^{-1}$		0.994		0.661		1.11		0.741		1.21		0.805	
$t_r \times 10^3$, (kips)$^{-1}$		1.22		0.814		1.37		0.912		1.49		0.991	
r_x/r_y		5.05				5.12				5.14			
r_y, in.		2.18				2.15				2.12			

[c] Shape is slender for compression with F_y = 50 ksi.

Note: Heavy line indicates KL/r_y equal to or greater than 200.

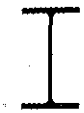

W27-W24

Table 6-1 (continued)
Combined Flexure and Axial Force
W-Shapes

F_y = 50 ksi

Shape		W27×				W24×							
		84[c]				370[h]				335[h]			
Design		$p \times 10^3$ (kips)$^{-1}$		$b_x \times 10^3$ (kip-ft)$^{-1}$		$p \times 10^3$ (kips)$^{-1}$		$b_x \times 10^3$ (kip-ft)$^{-1}$		$p \times 10^3$ (kips)$^{-1}$		$b_x \times 10^3$ (kip-ft)$^{-1}$	
		ASD	LRFD	ASD	LRFD	ASD	LRFD	ASD	LRFD	ASD	LRFD	ASD	LRFD
Effective length, KL (ft), with respect to least radius of gyration, r_y, or Unbraced Length, L_b (ft), for X-X axis bending	0	1.53	1.02	1.46	0.971	0.306	0.204	0.315	0.210	0.340	0.226	0.349	0.232
	11	1.92	1.28	1.63	1.09	0.345	0.230	0.315	0.210	0.384	0.255	0.349	0.232
	12	2.02	1.34	1.69	1.12	0.353	0.235	0.316	0.210	0.393	0.261	0.351	0.233
	13	2.12	1.41	1.75	1.16	0.362	0.241	0.319	0.212	0.403	0.268	0.354	0.235
	14	2.25	1.49	1.81	1.20	0.372	0.247	0.321	0.213	0.414	0.276	0.357	0.237
	15	2.39	1.59	1.88	1.25	0.382	0.254	0.323	0.215	0.426	0.284	0.359	0.239
	16	2.56	1.70	1.95	1.30	0.394	0.262	0.326	0.217	0.440	0.293	0.362	0.241
	17	2.76	1.84	2.03	1.35	0.407	0.271	0.328	0.218	0.455	0.303	0.365	0.243
	18	3.00	1.99	2.11	1.41	0.422	0.280	0.330	0.220	0.471	0.314	0.368	0.245
	19	3.28	2.18	2.21	1.47	0.437	0.291	0.333	0.221	0.489	0.325	0.371	0.247
	20	3.62	2.41	2.31	1.53	0.454	0.302	0.335	0.223	0.509	0.338	0.375	0.249
	22	4.38	2.91	2.64	1.76	0.494	0.328	0.340	0.226	0.554	0.368	0.381	0.254
	24	5.21	3.47	3.06	2.04	0.540	0.359	0.346	0.230	0.608	0.404	0.388	0.258
	26	6.12	4.07	3.49	2.32	0.596	0.397	0.351	0.234	0.672	0.447	0.395	0.263
	28	7.10	4.72	3.93	2.62	0.663	0.441	0.357	0.237	0.750	0.499	0.402	0.267
	30	8.15	5.42	4.38	2.92	0.743	0.495	0.363	0.241	0.843	0.561	0.409	0.272
	32	9.27	6.17	4.84	3.22	0.842	0.560	0.369	0.245	0.957	0.636	0.417	0.277
	34	10.5	6.96	5.31	3.53	0.950	0.632	0.375	0.249	1.08	0.718	0.425	0.283
	36					1.07	0.709	0.381	0.254	1.21	0.806	0.433	0.288
	38					1.19	0.790	0.388	0.258	1.35	0.897	0.442	0.294
	40					1.32	0.875	0.395	0.263	1.49	0.994	0.451	0.300
	42					1.45	0.965	0.402	0.267	1.65	1.10	0.460	0.306
	44					1.59	1.06	0.409	0.272	1.81	1.20	0.470	0.313
	46					1.74	1.16	0.417	0.277	1.98	1.32	0.480	0.319
	48					1.89	1.26	0.425	0.283	2.15	1.43	0.491	0.326
	50					2.05	1.37	0.433	0.288	2.34	1.55	0.502	0.334
Other Constants and Properties													
$b_y \times 10^3$, (kip-ft)$^{-1}$		10.7		7.14		1.33		0.888		1.50		1.00	
$t_y \times 10^3$, (kips)$^{-1}$		1.35		0.900		0.306		0.204		0.340		0.226	
$t_r \times 10^3$, (kips)$^{-1}$		1.66		1.11		0.376		0.251		0.417		0.278	
r_x/r_y		5.17				3.39				3.41			
r_y, in.		2.07				3.27				3.23			

[c] Shape is slender for compression with F_y = 50 ksi.

[h] Flange thickness greater than 2 in. Special requirements may apply per AISC *Specification* Section A3.1c.

Note: Heavy line indicates KL/r_y equal to or greater than 200.

Table 6-1 (continued)
Combined Flexure and Axial Force
W-Shapes

F_y = 50 ksi

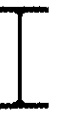
W24

Shape		W24×											
		306[h]				279[h]				250			
Design		$p \times 10^3$ (kips)$^{-1}$		$b_x \times 10^3$ (kip-ft)$^{-1}$		$p \times 10^3$ (kips)$^{-1}$		$b_x \times 10^3$ (kip-ft)$^{-1}$		$p \times 10^3$ (kips)$^{-1}$		$b_x \times 10^3$ (kip-ft)$^{-1}$	
		ASD	LRFD	ASD	LRFD	ASD	LRFD	ASD	LRFD	ASD	LRFD	ASD	LRFD
Effective length, KL (ft), with respect to least radius of gyration, r_y, or Unbraced Length, L_b (ft), for X-X axis bending	0	0.372	0.248	0.386	0.257	0.408	0.271	0.427	0.284	0.454	0.302	0.479	0.319
	11	0.422	0.281	0.386	0.257	0.463	0.308	0.427	0.284	0.517	0.344	0.479	0.319
	12	0.432	0.287	0.389	0.259	0.474	0.316	0.430	0.286	0.530	0.353	0.483	0.322
	13	0.443	0.295	0.392	0.261	0.487	0.324	0.434	0.289	0.544	0.362	0.489	0.325
	14	0.455	0.303	0.396	0.263	0.501	0.333	0.438	0.292	0.560	0.373	0.494	0.329
	15	0.469	0.312	0.399	0.266	0.516	0.343	0.443	0.294	0.578	0.384	0.499	0.332
	16	0.484	0.322	0.403	0.268	0.533	0.355	0.447	0.297	0.597	0.397	0.505	0.336
	17	0.501	0.333	0.406	0.270	0.552	0.367	0.451	0.300	0.619	0.412	0.510	0.340
	18	0.520	0.346	0.410	0.273	0.573	0.381	0.456	0.303	0.642	0.427	0.516	0.343
	19	0.540	0.359	0.414	0.275	0.595	0.396	0.461	0.306	0.668	0.445	0.522	0.347
	20	0.562	0.374	0.418	0.278	0.620	0.413	0.465	0.310	0.697	0.463	0.528	0.351
	22	0.612	0.407	0.426	0.283	0.677	0.451	0.475	0.316	0.762	0.507	0.541	0.360
	24	0.673	0.448	0.434	0.289	0.746	0.496	0.485	0.323	0.841	0.559	0.554	0.368
	26	0.746	0.496	0.442	0.294	0.828	0.551	0.496	0.330	0.935	0.622	0.567	0.378
	28	0.834	0.555	0.451	0.300	0.927	0.617	0.507	0.337	1.05	0.698	0.582	0.387
	30	0.939	0.625	0.461	0.306	1.05	0.697	0.519	0.345	1.19	0.792	0.597	0.397
	32	1.07	0.711	0.470	0.313	1.19	0.793	0.531	0.353	1.35	0.901	0.613	0.408
	34	1.21	0.802	0.480	0.320	1.35	0.895	0.544	0.362	1.53	1.02	0.630	0.419
	36	1.35	0.899	0.491	0.327	1.51	1.00	0.557	0.371	1.71	1.14	0.648	0.431
	38	1.51	1.00	0.502	0.334	1.68	1.12	0.571	0.380	1.91	1.27	0.667	0.444
	40	1.67	1.11	0.513	0.341	1.86	1.24	0.586	0.390	2.12	1.41	0.687	0.457
	42	1.84	1.22	0.525	0.349	2.05	1.37	0.601	0.400	2.33	1.55	0.708	0.471
	44	2.02	1.34	0.538	0.358	2.25	1.50	0.618	0.411	2.56	1.70	0.731	0.486
	46	2.21	1.47	0.551	0.367	2.46	1.64	0.635	0.423	2.80	1.86	0.755	0.502
	48	2.40	1.60	0.565	0.376	2.68	1.78	0.653	0.435	3.05	2.03	0.781	0.519
	50	2.61	1.73	0.579	0.386	2.91	1.94	0.673	0.448	3.31	2.20	0.814	0.541
Other Constants and Properties													
$b_y \times 10^3$, (kip-ft)$^{-1}$		1.66		1.11		1.85		1.23		2.08		1.39	
$f_y \times 10^3$, (kips)$^{-1}$		0.372		0.248		0.408		0.271		0.454		0.302	
$f_r \times 10^3$, (kips)$^{-1}$		0.457		0.305		0.501		0.334		0.558		0.372	
r_x/r_y		3.41				3.41				3.41			
r_y, in.		3.20				3.17				3.14			

[h] Flange thickness greater than 2 in. Special requirements may apply per AISC *Specification* Section A3.1c.

W24

Table 6-1 (continued)
Combined Flexure and Axial Force
W-Shapes

F_y = 50 ksi

Shape		W24×											
		229				207				192			
Design		$p \times 10^3$ (kips)$^{-1}$		$b_x \times 10^3$ (kip-ft)$^{-1}$		$p \times 10^3$ (kips)$^{-1}$		$b_x \times 10^3$ (kip-ft)$^{-1}$		$p \times 10^3$ (kips)$^{-1}$		$b_x \times 10^3$ (kip-ft)$^{-1}$	
		ASD	LRFD	ASD	LRFD	ASD	LRFD	ASD	LRFD	ASD	LRFD	ASD	LRFD
Effective length, KL (ft), with respect to least radius of gyration, r_y, or Unbraced Length, L_b (ft), for X-X axis bending	0	0.497	0.331	0.528	0.351	0.550	0.366	0.588	0.391	0.591	0.393	0.637	0.424
	11	0.567	0.377	0.528	0.351	0.629	0.419	0.589	0.392	0.677	0.450	0.639	0.425
	12	0.581	0.387	0.534	0.355	0.646	0.430	0.596	0.397	0.694	0.462	0.647	0.431
	13	0.597	0.397	0.540	0.359	0.664	0.442	0.604	0.402	0.714	0.475	0.656	0.437
	14	0.615	0.409	0.547	0.364	0.684	0.455	0.612	0.407	0.736	0.490	0.665	0.443
	15	0.635	0.422	0.553	0.368	0.706	0.470	0.620	0.412	0.760	0.506	0.675	0.449
	16	0.657	0.437	0.560	0.372	0.731	0.486	0.628	0.418	0.787	0.524	0.684	0.455
	17	0.681	0.453	0.567	0.377	0.758	0.505	0.637	0.424	0.816	0.543	0.694	0.462
	18	0.707	0.471	0.574	0.382	0.788	0.525	0.646	0.429	0.849	0.565	0.705	0.469
	19	0.736	0.490	0.581	0.387	0.821	0.547	0.655	0.435	0.885	0.589	0.715	0.476
	20	0.768	0.511	0.588	0.391	0.858	0.571	0.664	0.442	0.924	0.615	0.726	0.483
	22	0.842	0.560	0.604	0.402	0.942	0.626	0.683	0.454	1.02	0.675	0.749	0.498
	24	0.930	0.619	0.620	0.412	1.04	0.694	0.704	0.468	1.13	0.749	0.773	0.514
	26	1.04	0.690	0.637	0.424	1.17	0.775	0.725	0.483	1.26	0.837	0.799	0.532
	28	1.17	0.776	0.655	0.436	1.31	0.874	0.749	0.498	1.42	0.944	0.827	0.550
	30	1.33	0.883	0.674	0.448	1.50	0.996	0.773	0.514	1.62	1.08	0.857	0.570
	32	1.51	1.00	0.694	0.462	1.70	1.13	0.800	0.532	1.84	1.23	0.888	0.591
	34	1.70	1.13	0.716	0.476	1.92	1.28	0.828	0.551	2.08	1.38	0.923	0.614
	36	1.91	1.27	0.739	0.491	2.16	1.43	0.858	0.571	2.33	1.55	0.960	0.639
	38	2.13	1.42	0.763	0.508	2.40	1.60	0.891	0.593	2.60	1.73	1.00	0.666
	40	2.36	1.57	0.789	0.525	2.66	1.77	0.926	0.616	2.88	1.92	1.05	0.697
	42	2.60	1.73	0.817	0.544	2.93	1.95	0.967	0.643	3.17	2.11	1.11	0.740
	44	2.85	1.90	0.847	0.563	3.22	2.14	1.02	0.679	3.48	2.32	1.17	0.782
	46	3.12	2.08	0.884	0.588	3.52	2.34	1.07	0.715	3.81	2.53	1.24	0.824
	48	3.40	2.26	0.928	0.617	3.83	2.55	1.13	0.751	4.16	2.76	1.30	0.866
	50	3.68	2.45	0.971	0.646	4.16	2.77	1.18	0.787	4.50	2.99	1.36	0.908
Other Constants and Properties													
$b_y \times 10^3$, (kip-ft)$^{-1}$		2.31		1.54		2.60		1.73		2.83		1.88	
$t_y \times 10^3$, (kips)$^{-1}$		0.497		0.331		0.550		0.366		0.591		0.393	
$t_r \times 10^3$, (kips)$^{-1}$		0.611		0.407		0.676		0.451		0.726		0.484	
r_x/r_y		3.44				3.44				3.42			
r_y, in.		3.11				3.08				3.07			

F_y = 50 ksi

Table 6-1 (continued)
Combined Flexure and Axial Force
W-Shapes

W24

Shape		W24×											
		176				162				146			
Design		$p \times 10^3$ (kips)$^{-1}$		$b_x \times 10^3$ (kip-ft)$^{-1}$		$p \times 10^3$ (kips)$^{-1}$		$b_x \times 10^3$ (kip-ft)$^{-1}$		$p \times 10^3$ (kips)$^{-1}$		$b_x \times 10^3$ (kip-ft)$^{-1}$	
		ASD	LRFD	ASD	LRFD	ASD	LRFD	ASD	LRFD	ASD	LRFD	ASD	LRFD
Effective length, KL (ft), with respect to least radius of gyration, r_y, or Unbraced Length, L_b (ft), for X-X axis bending	0	0.646	0.430	0.697	0.464	0.699	0.465	0.761	0.506	0.777	0.517	0.852	0.567
	11	0.742	0.493	0.700	0.466	0.801	0.533	0.764	0.508	0.894	0.595	0.857	0.571
	12	0.761	0.506	0.710	0.472	0.822	0.547	0.776	0.516	0.918	0.611	0.872	0.580
	13	0.783	0.521	0.721	0.479	0.846	0.563	0.788	0.524	0.945	0.629	0.887	0.590
	14	0.808	0.537	0.731	0.487	0.872	0.580	0.801	0.533	0.975	0.649	0.902	0.600
	15	0.835	0.555	0.743	0.494	0.901	0.600	0.814	0.541	1.01	0.671	0.918	0.611
	16	0.865	0.575	0.754	0.502	0.934	0.621	0.827	0.550	1.05	0.696	0.935	0.622
	17	0.898	0.597	0.766	0.510	0.969	0.645	0.841	0.560	1.09	0.723	0.952	0.633
	18	0.934	0.622	0.778	0.518	1.01	0.671	0.855	0.569	1.13	0.753	0.970	0.645
	19	0.975	0.649	0.791	0.526	1.05	0.700	0.870	0.579	1.18	0.786	0.988	0.657
	20	1.02	0.678	0.804	0.535	1.10	0.731	0.886	0.589	1.24	0.823	1.01	0.670
	22	1.12	0.746	0.832	0.553	1.21	0.804	0.918	0.611	1.36	0.907	1.05	0.697
	24	1.25	0.829	0.861	0.573	1.34	0.892	0.953	0.634	1.52	1.01	1.09	0.727
	26	1.40	0.928	0.893	0.594	1.50	0.999	0.991	0.660	1.70	1.13	1.14	0.759
	28	1.58	1.05	0.927	0.617	1.70	1.13	1.03	0.687	1.93	1.29	1.19	0.794
	30	1.80	1.20	0.964	0.641	1.94	1.29	1.08	0.716	2.21	1.47	1.25	0.832
	32	2.05	1.37	1.00	0.668	2.21	1.47	1.13	0.749	2.52	1.68	1.31	0.874
	34	2.32	1.54	1.05	0.697	2.49	1.66	1.18	0.784	2.84	1.89	1.39	0.926
	36	2.60	1.73	1.09	0.728	2.79	1.86	1.24	0.826	3.19	2.12	1.50	1.00
	38	2.90	1.93	1.15	0.767	3.11	2.07	1.33	0.886	3.55	2.36	1.62	1.08
	40	3.21	2.13	1.23	0.818	3.45	2.29	1.42	0.947	3.93	2.62	1.73	1.15
	42	3.54	2.35	1.31	0.869	3.80	2.53	1.51	1.01	4.34	2.89	1.85	1.23
	44	3.88	2.58	1.38	0.920	4.17	2.78	1.60	1.07	4.76	3.17	1.96	1.30
	46	4.24	2.82	1.46	0.970	4.56	3.03	1.69	1.13	5.20	3.46	2.07	1.38
	48	4.62	3.07	1.53	1.02	4.96	3.30	1.78	1.19	5.67	3.77	2.19	1.45
	50	5.01	3.34	1.61	1.07	5.39	3.58	1.87	1.25	6.15	4.09	2.30	1.53
Other Constants and Properties													
$b_y \times 10^3$, (kip-ft)$^{-1}$		3.10		2.06		3.39		2.26		3.82		2.54	
$t_y \times 10^3$, (kips)$^{-1}$		0.646		0.430		0.699		0.465		0.777		0.517	
$t_r \times 10^3$, (kips)$^{-1}$		0.794		0.529		0.858		0.572		0.954		0.636	
r_x/r_y		3.45				3.41				3.42			
r_y, in.		3.04				3.05				3.01			

W24

Table 6-1 (continued)
Combined Flexure and Axial Force
W-Shapes

F_y = 50 ksi

Shape		W24×											
		131				117[c]				104[c]			
Design		$p \times 10^3$ (kips)$^{-1}$		$b_x \times 10^3$ (kip-ft)$^{-1}$		$p \times 10^3$ (kips)$^{-1}$		$b_x \times 10^3$ (kip-ft)$^{-1}$		$p \times 10^3$ (kips)$^{-1}$		$b_x \times 10^3$ (kip-ft)$^{-1}$	
		ASD	LRFD	ASD	LRFD	ASD	LRFD	ASD	LRFD	ASD	LRFD	ASD	LRFD
Effective length, KL (ft), with respect to least radius of gyration, r_y, or Unbraced Length, L_b (ft), for X-X axis bending	0	0.865	0.576	0.963	0.641	0.994	0.661	1.09	0.725	1.14	0.759	1.23	0.820
	11	1.00	0.665	0.972	0.646	1.13	0.752	1.10	0.733	1.30	0.862	1.25	0.832
	12	1.03	0.684	0.989	0.658	1.16	0.771	1.12	0.748	1.33	0.884	1.28	0.849
	13	1.06	0.704	1.01	0.670	1.19	0.794	1.15	0.762	1.37	0.908	1.30	0.867
	14	1.09	0.727	1.03	0.683	1.23	0.820	1.17	0.778	1.41	0.936	1.33	0.886
	15	1.13	0.753	1.05	0.696	1.28	0.850	1.19	0.794	1.45	0.966	1.36	0.905
	16	1.17	0.781	1.07	0.710	1.33	0.882	1.22	0.810	1.50	1.00	1.39	0.925
	17	1.22	0.813	1.09	0.724	1.38	0.919	1.24	0.828	1.56	1.04	1.42	0.946
	18	1.27	0.848	1.11	0.739	1.44	0.959	1.27	0.846	1.63	1.08	1.46	0.969
	19	1.33	0.886	1.13	0.754	1.51	1.00	1.30	0.865	1.70	1.13	1.49	0.992
	20	1.39	0.928	1.16	0.770	1.58	1.05	1.33	0.885	1.79	1.19	1.53	1.02
	22	1.54	1.03	1.21	0.804	1.75	1.16	1.39	0.927	1.99	1.32	1.61	1.07
	24	1.72	1.14	1.26	0.841	1.96	1.30	1.46	0.974	2.23	1.48	1.69	1.13
	26	1.94	1.29	1.33	0.882	2.21	1.47	1.54	1.03	2.52	1.68	1.79	1.19
	28	2.21	1.47	1.39	0.928	2.53	1.68	1.63	1.08	2.89	1.92	1.90	1.27
	30	2.53	1.68	1.47	0.977	2.90	1.93	1.73	1.15	3.32	2.21	2.06	1.37
	32	2.88	1.92	1.56	1.04	3.30	2.20	1.89	1.26	3.77	2.51	2.29	1.52
	34	3.25	2.16	1.70	1.13	3.72	2.48	2.07	1.38	4.26	2.83	2.51	1.67
	36	3.65	2.43	1.84	1.23	4.18	2.78	2.25	1.50	4.78	3.18	2.74	1.82
	38	4.06	2.70	1.99	1.32	4.65	3.10	2.43	1.62	5.32	3.54	2.97	1.98
	40	4.50	3.00	2.13	1.42	5.16	3.43	2.62	1.74	5.90	3.92	3.20	2.13
	42	4.96	3.30	2.28	1.52	5.68	3.78	2.80	1.86	6.50	4.33	3.44	2.29
	44	5.45	3.62	2.42	1.61	6.24	4.15	2.98	1.99	7.13	4.75	3.67	2.44
	46	5.95	3.96	2.57	1.71	6.82	4.54	3.17	2.11	7.80	5.19	3.91	2.60
	48	6.48	4.31	2.71	1.80	7.42	4.94	3.35	2.23	8.49	5.65	4.14	2.76

Other Constants and Properties						
$b_y \times 10^3$, (kip-ft)$^{-1}$	4.37	2.91	4.99	3.32	5.71	3.80
$t_y \times 10^3$, (kips)$^{-1}$	0.865	0.576	0.971	0.646	1.09	0.724
$t_r \times 10^3$, (kips)$^{-1}$	1.06	0.709	1.19	0.795	1.34	0.891
r_x/r_y	3.43		3.44		3.47	
r_y, in.	2.97		2.94		2.91	

[c] Shape is slender for compression with F_y = 50 ksi.

Note: Heavy line indicates KL/r_y equal to or greater than 200.

F_y = 50 ksi

Table 6-1 (continued)
Combined Flexure and Axial Force
W-Shapes

W24

Shape		W24×											
		103[c]				94[c]				84[c]			
Design		$p \times 10^3$ (kips)$^{-1}$		$b_x \times 10^3$ (kip-ft)$^{-1}$		$p \times 10^3$ (kips)$^{-1}$		$b_x \times 10^3$ (kip-ft)$^{-1}$		$p \times 10^3$ (kips)$^{-1}$		$b_x \times 10^3$ (kip-ft)$^{-1}$	
		ASD	LRFD	ASD	LRFD	ASD	LRFD	ASD	LRFD	ASD	LRFD	ASD	LRFD
Effective length, KL (ft), with respect to least radius of gyration, r_y, or Unbraced Length, L_b (ft), for X-X axis bending	0	1.13	0.753	1.27	0.847	1.26	0.840	1.40	0.933	1.46	0.968	1.59	1.06
	11	1.52	1.01	1.42	0.944	1.67	1.11	1.57	1.05	1.92	1.28	1.80	1.20
	12	1.62	1.08	1.46	0.972	1.78	1.18	1.62	1.08	2.03	1.35	1.87	1.24
	13	1.73	1.15	1.51	1.00	1.90	1.26	1.68	1.12	2.17	1.44	1.93	1.28
	14	1.86	1.23	1.55	1.03	2.04	1.36	1.73	1.15	2.33	1.55	2.00	1.33
	15	2.00	1.33	1.61	1.07	2.21	1.47	1.79	1.19	2.52	1.68	2.08	1.38
	16	2.18	1.45	1.66	1.10	2.40	1.60	1.86	1.24	2.75	1.83	2.16	1.44
	17	2.38	1.58	1.72	1.14	2.62	1.74	1.93	1.28	3.01	2.00	2.25	1.49
	18	2.61	1.74	1.78	1.19	2.88	1.92	2.01	1.33	3.32	2.21	2.34	1.56
	19	2.88	1.92	1.85	1.23	3.18	2.12	2.09	1.39	3.68	2.45	2.45	1.63
	20	3.19	2.12	1.92	1.28	3.53	2.35	2.17	1.45	4.08	2.71	2.56	1.70
	22	3.86	2.57	2.09	1.39	4.27	2.84	2.43	1.61	4.94	3.28	2.95	1.96
	24	4.60	3.06	2.37	1.58	5.08	3.38	2.76	1.84	5.88	3.91	3.37	2.24
	26	5.40	3.59	2.65	1.77	5.96	3.97	3.10	2.06	6.90	4.59	3.80	2.53
	28	6.26	4.16	2.94	1.95	6.92	4.60	3.44	2.29	8.00	5.32	4.24	2.82
	30	7.19	4.78	3.22	2.14	7.94	5.28	3.79	2.52	9.18	6.11	4.67	3.11
	32	8.18	5.44	3.50	2.33	9.03	6.01	4.13	2.75	10.4	6.95	5.11	3.40
Other Constants and Properties													
$b_y \times 10^3$, (kip-ft)$^{-1}$		8.58		5.71		9.50		6.32		10.9		7.27	
$f_y \times 10^3$, (kips)$^{-1}$		1.10		0.733		1.21		0.802		1.35		0.900	
$f_r \times 10^3$, (kips)$^{-1}$		1.35		0.903		1.48		0.987		1.66		1.11	
r_x/r_y		5.03				4.98				5.02			
r_y, in.		1.99				1.98				1.95			

[c] Shape is slender for compression with F_y = 50 ksi.

Note: Heavy line indicates KL/r_y equal to or greater than 200.

W24

Table 6-1 (continued)
Combined Flexure and Axial Force
W-Shapes

F_y = 50 ksi

Shape		W24×											
		76				68[c]				62[c]			
Design		$p \times 10^3$ (kips)$^{-1}$		$b_x \times 10^3$ (kip-ft)$^{-1}$		$p \times 10^3$ (kips)$^{-1}$		$b_x \times 10^3$ (kip-ft)$^{-1}$		$p \times 10^3$ (kips)$^{-1}$		$b_x \times 10^3$ (kip-ft)$^{-1}$	
		ASD	LRFD	ASD	LRFD	ASD	LRFD	ASD	LRFD	ASD	LRFD	ASD	LRFD
Effective length, KL (ft), with respect to least radius of gyration, r_y, or Unbraced Length, L_b (ft), for X-X axis bending	0	1.64	1.09	1.78	1.19	1.87	1.24	2.01	1.34	2.08	1.38	2.33	1.55
	6	1.78	1.18	1.78	1.19	2.03	1.35	2.01	1.34	2.40	1.60	2.44	1.63
	7	1.83	1.22	1.79	1.19	2.09	1.39	2.04	1.36	2.54	1.69	2.56	1.70
	8	1.89	1.26	1.85	1.23	2.17	1.44	2.11	1.40	2.72	1.81	2.68	1.78
	9	1.97	1.31	1.91	1.27	2.26	1.50	2.18	1.45	2.94	1.96	2.82	1.87
	10	2.06	1.37	1.97	1.31	2.36	1.57	2.26	1.50	3.22	2.14	2.97	1.97
	11	2.17	1.44	2.04	1.36	2.49	1.66	2.34	1.56	3.59	2.39	3.13	2.08
	12	2.30	1.53	2.11	1.41	2.64	1.76	2.43	1.62	4.07	2.71	3.32	2.21
	13	2.45	1.63	2.19	1.46	2.82	1.88	2.53	1.68	4.67	3.11	3.53	2.35
	14	2.62	1.75	2.28	1.52	3.03	2.02	2.63	1.75	5.42	3.60	3.77	2.51
	15	2.84	1.89	2.37	1.58	3.29	2.19	2.75	1.83	6.22	4.14	4.15	2.76
	16	3.10	2.06	2.47	1.64	3.59	2.39	2.87	1.91	7.08	4.71	4.62	3.08
	17	3.40	2.26	2.58	1.71	3.97	2.64	3.01	2.00	7.99	5.31	5.11	3.40
	18	3.76	2.50	2.69	1.79	4.42	2.94	3.16	2.10	8.96	5.96	5.60	3.72
	19	4.19	2.79	2.82	1.88	4.92	3.27	3.35	2.23	9.98	6.64	6.10	4.06
	20	4.64	3.09	3.02	2.01	5.45	3.63	3.66	2.43	11.1	7.36	6.61	4.40
	22	5.62	3.74	3.53	2.35	6.60	4.39	4.29	2.85	13.4	8.90	7.64	5.08
	24	6.68	4.45	4.05	2.69	7.85	5.22	4.94	3.29				
	26	7.84	5.22	4.58	3.05	9.21	6.13	5.61	3.74				
	28	9.10	6.05	5.12	3.41	10.7	7.11	6.30	4.19				
	30	10.4	6.95	5.66	3.77	12.3	8.16	6.99	4.65				
	32	11.9	7.90	6.21	4.13								

Other Constants and Properties						
$b_y \times 10^3$, (kip-ft)$^{-1}$	12.5	8.29	14.5	9.67	22.7	15.1
$t_y \times 10^3$, (kips)$^{-1}$	1.49	0.992	1.66	1.11	1.84	1.22
$t_r \times 10^2$, (kips)$^{-1}$	1.83	1.22	2.04	1.36	2.25	1.50
r_x/r_y	5.05		5.11		6.69	
r_y, in.	1.92		1.87		1.38	

[c] Shape is slender for compression with F_y = 50 ksi.

Note: Heavy line indicates KL/r_y equal to or greater than 200.

Table 6-1 (continued)
Combined Flexure and Axial Force
W-Shapes

F_y = 50 ksi

W24-W21

Shape		W24×				W21×							
		55[c,v]				201				182			
Design		$p \times 10^3$ (kips)$^{-1}$		$b_x \times 10^3$ (kip-ft)$^{-1}$		$p \times 10^3$ (kips)$^{-1}$		$b_x \times 10^3$ (kip-ft)$^{-1}$		$p \times 10^3$ (kips)$^{-1}$		$b_x \times 10^3$ (kip-ft)$^{-1}$	
		ASD	LRFD	ASD	LRFD	ASD	LRFD	ASD	LRFD	ASD	LRFD	ASD	LRFD
Effective length, KL (ft), with respect to least radius of gyration, r_y, or Unbraced Length, L_b (ft), for X-X axis bending	0	2.42	1.61	2.66	1.77	0.563	0.375	0.672	0.447	0.623	0.415	0.748	0.498
	6	2.80	1.87	2.82	1.87	0.587	0.391	0.672	0.447	0.650	0.432	0.748	0.498
	7	2.97	1.98	2.95	1.96	0.596	0.397	0.672	0.447	0.660	0.439	0.748	0.498
	8	3.18	2.11	3.10	2.07	0.606	0.403	0.672	0.447	0.672	0.447	0.748	0.498
	9	3.45	2.29	3.27	2.18	0.618	0.411	0.672	0.447	0.685	0.456	0.748	0.498
	10	3.79	2.52	3.46	2.30	0.632	0.421	0.672	0.447	0.700	0.466	0.748	0.498
	11	4.23	2.81	3.67	2.44	0.648	0.431	0.675	0.449	0.718	0.478	0.752	0.500
	12	4.80	3.19	3.91	2.60	0.665	0.443	0.682	0.454	0.737	0.491	0.761	0.507
	13	5.57	3.70	4.18	2.78	0.685	0.455	0.690	0.459	0.759	0.505	0.771	0.513
	14	6.46	4.29	4.51	3.00	0.706	0.470	0.698	0.464	0.784	0.521	0.780	0.519
	15	7.41	4.93	5.08	3.38	0.730	0.486	0.706	0.470	0.811	0.539	0.790	0.526
	16	8.43	5.61	5.68	3.78	0.757	0.504	0.714	0.475	0.841	0.559	0.801	0.533
	17	9.52	6.33	6.29	4.18	0.786	0.523	0.723	0.481	0.874	0.581	0.811	0.540
	18	10.7	7.10	6.91	4.60	0.819	0.545	0.731	0.487	0.910	0.606	0.822	0.547
	19	11.9	7.91	7.55	5.02	0.854	0.568	0.740	0.492	0.951	0.632	0.833	0.554
	20	13.2	8.77	8.20	5.46	0.894	0.595	0.749	0.498	0.995	0.662	0.844	0.562
	22	15.9	10.6	9.52	6.34	0.985	0.655	0.768	0.511	1.10	0.730	0.868	0.577
	24					1.10	0.729	0.788	0.524	1.22	0.813	0.893	0.594
	26					1.23	0.818	0.809	0.538	1.37	0.914	0.919	0.612
	28					1.39	0.926	0.831	0.553	1.56	1.04	0.947	0.630
	30					1.59	1.06	0.854	0.568	1.79	1.19	0.977	0.650
	32					1.81	1.21	0.878	0.584	2.03	1.35	1.01	0.671
	34					2.05	1.36	0.904	0.602	2.30	1.53	1.04	0.694
	36					2.30	1.53	0.932	0.620	2.57	1.71	1.08	0.718
	38					2.56	1.70	0.961	0.640	2.87	1.91	1.12	0.744
	40					2.83	1.89	0.993	0.660	3.18	2.11	1.16	0.772
Other Constants and Properties													
$b_y \times 10^3$, (kip-ft)$^{-1}$		26.8		17.8		2.68		1.78		2.99		1.99	
$t_y \times 10^3$, (kips)$^{-1}$		2.06		1.37		0.563		0.375		0.623		0.415	
$t_r \times 10^3$, (kips)$^{-1}$		2.53		1.69		0.692		0.461		0.765		0.510	
r_x/r_y		6.80				3.14				3.13			
r_y, in.		1.34				3.02				3.00			

[c] Shape is slender for compression with F_y = 50 ksi.
[v] Shape does not meet the h/t_w limit for shear in AISC *Specification* Section G2.1(a) with F_y = 50 ksi; therefore, ϕ_v = 0.90 and Ω_v = 1.67.
Note: Heavy line indicates KL/r_y equal to or greater than 200.

W21

Table 6-1 (continued)
Combined Flexure and Axial Force
W-Shapes

F_y = 50 ksi

Shape		W21×											
		166				147				132			
Design		$p \times 10^3$ (kips)$^{-1}$		$b_x \times 10^3$ (kip-ft)$^{-1}$		$p \times 10^3$ (kips)$^{-1}$		$b_x \times 10^3$ (kip-ft)$^{-1}$		$p \times 10^3$ (kips)$^{-1}$		$b_x \times 10^3$ (kip-ft)$^{-1}$	
		ASD	LRFD	ASD	LRFD	ASD	LRFD	ASD	LRFD	ASD	LRFD	ASD	LRFD
Effective length, KL (ft), with respect to least radius of gyration, r_y, or Unbraced Length, L_b (ft), for X-X axis bending	0	0.684	0.455	0.825	0.549	0.773	0.514	0.955	0.635	0.861	0.573	1.07	0.712
	6	0.714	0.475	0.825	0.549	0.808	0.537	0.955	0.635	0.900	0.599	1.07	0.712
	7	0.725	0.482	0.825	0.549	0.820	0.546	0.955	0.635	0.914	0.608	1.07	0.712
	8	0.738	0.491	0.825	0.549	0.835	0.556	0.955	0.635	0.931	0.620	1.07	0.712
	9	0.753	0.501	0.825	0.549	0.853	0.567	0.955	0.635	0.951	0.633	1.07	0.712
	10	0.770	0.512	0.825	0.549	0.873	0.581	0.955	0.635	0.973	0.647	1.07	0.712
	11	0.789	0.525	0.829	0.552	0.895	0.596	0.963	0.641	0.999	0.664	1.08	0.719
	12	0.811	0.540	0.841	0.559	0.920	0.612	0.978	0.651	1.03	0.683	1.10	0.731
	13	0.835	0.556	0.852	0.567	0.949	0.631	0.993	0.661	1.06	0.705	1.12	0.743
	14	0.862	0.574	0.864	0.575	0.980	0.652	1.01	0.671	1.09	0.728	1.14	0.756
	15	0.892	0.594	0.876	0.583	1.02	0.675	1.02	0.682	1.13	0.755	1.16	0.769
	16	0.925	0.616	0.888	0.591	1.05	0.701	1.04	0.693	1.18	0.784	1.18	0.782
	17	0.962	0.640	0.901	0.599	1.10	0.730	1.06	0.704	1.23	0.816	1.20	0.796
	18	1.00	0.667	0.914	0.608	1.14	0.761	1.08	0.716	1.28	0.852	1.22	0.811
	19	1.05	0.697	0.927	0.617	1.20	0.796	1.09	0.728	1.34	0.892	1.24	0.826
	20	1.10	0.729	0.941	0.626	1.25	0.835	1.11	0.740	1.41	0.935	1.26	0.841
	22	1.21	0.805	0.970	0.645	1.39	0.924	1.15	0.767	1.56	1.04	1.31	0.874
	24	1.35	0.897	1.00	0.666	1.55	1.03	1.19	0.795	1.74	1.16	1.37	0.910
	26	1.52	1.01	1.03	0.688	1.75	1.17	1.24	0.825	1.97	1.31	1.43	0.948
	28	1.72	1.15	1.07	0.711	2.00	1.33	1.29	0.858	2.25	1.50	1.49	0.990
	30	1.98	1.31	1.11	0.736	2.29	1.53	1.34	0.894	2.59	1.72	1.56	1.04
	32	2.25	1.50	1.15	0.763	2.61	1.74	1.40	0.933	2.95	1.96	1.63	1.09
	34	2.54	1.69	1.19	0.792	2.95	1.96	1.47	0.975	3.32	2.21	1.72	1.14
	36	2.85	1.89	1.24	0.823	3.30	2.20	1.54	1.02	3.73	2.48	1.85	1.23
	38	3.17	2.11	1.29	0.857	3.68	2.45	1.64	1.09	4.15	2.76	1.98	1.32
	40	3.51	2.34	1.34	0.895	4.08	2.71	1.75	1.16	4.60	3.06	2.12	1.41
Other Constants and Properties													
$b_y \times 10^3$, (kip-ft)$^{-1}$		3.30		2.19		3.85		2.56		4.33		2.88	
$t_y \times 10^3$, (kips)$^{-1}$		0.684		0.455		0.773		0.514		0.861		0.573	
$t_r \times 10^3$, (kips)$^{-1}$		0.841		0.560		0.950		0.633		1.06		0.705	
r_x/r_y		3.13				3.11				3.11			
r_y, in.		2.99				2.95				2.93			

Table 6-1 (continued)
Combined Flexure and Axial Force
W-Shapes

F_y = 50 ksi

W21

Shape		W21×											
		122				111				101[c]			
Design		$p \times 10^3$ (kips)$^{-1}$		$b_x \times 10^3$ (kip-ft)$^{-1}$		$p \times 10^3$ (kips)$^{-1}$		$b_x \times 10^3$ (kip-ft)$^{-1}$		$p \times 10^3$ (kips)$^{-1}$		$b_x \times 10^3$ (kip-ft)$^{-1}$	
		ASD	LRFD	ASD	LRFD	ASD	LRFD	ASD	LRFD	ASD	LRFD	ASD	LRFD
Effective length, KL (ft), with respect to least radius of gyration, r_y, or Unbraced Length, L_b (ft), for X-X axis bending	0	0.930	0.619	1.16	0.772	1.02	0.682	1.28	0.850	1.13	0.754	1.41	0.937
	6	0.973	0.647	1.16	0.772	1.07	0.713	1.28	0.850	1.18	0.785	1.41	0.937
	7	0.988	0.658	1.16	0.772	1.09	0.725	1.28	0.850	1.20	0.797	1.41	0.937
	8	1.01	0.670	1.16	0.772	1.11	0.739	1.28	0.850	1.22	0.810	1.41	0.937
	9	1.03	0.684	1.16	0.772	1.13	0.754	1.28	0.850	1.24	0.826	1.41	0.937
	10	1.05	0.700	1.16	0.772	1.16	0.773	1.28	0.850	1.27	0.846	1.41	0.937
	11	1.08	0.719	1.17	0.781	1.19	0.793	1.29	0.861	1.31	0.869	1.43	0.951
	12	1.11	0.739	1.19	0.795	1.23	0.816	1.32	0.877	1.34	0.894	1.46	0.969
	13	1.15	0.763	1.22	0.809	1.27	0.842	1.34	0.894	1.39	0.923	1.49	0.989
	14	1.19	0.789	1.24	0.823	1.31	0.871	1.37	0.911	1.43	0.955	1.52	1.01
	15	1.23	0.817	1.26	0.838	1.36	0.903	1.40	0.929	1.49	0.990	1.55	1.03
	16	1.28	0.849	1.28	0.854	1.41	0.939	1.42	0.947	1.55	1.03	1.58	1.05
	17	1.33	0.884	1.31	0.870	1.47	0.979	1.45	0.966	1.61	1.07	1.61	1.07
	18	1.39	0.924	1.33	0.887	1.54	1.02	1.48	0.986	1.69	1.12	1.65	1.10
	19	1.45	0.967	1.36	0.905	1.61	1.07	1.51	1.01	1.77	1.18	1.69	1.12
	20	1.52	1.01	1.39	0.923	1.69	1.12	1.55	1.03	1.86	1.23	1.72	1.15
	22	1.69	1.13	1.45	0.961	1.88	1.25	1.62	1.08	2.06	1.37	1.81	1.20
	24	1.89	1.26	1.51	1.00	2.11	1.40	1.69	1.13	2.32	1.54	1.90	1.26
	26	2.14	1.43	1.58	1.05	2.39	1.59	1.78	1.18	2.63	1.75	2.00	1.33
	28	2.45	1.63	1.65	1.10	2.74	1.82	1.87	1.24	3.02	2.01	2.11	1.41
	30	2.82	1.87	1.74	1.16	3.14	2.09	1.97	1.31	3.46	2.30	2.24	1.49
	32	3.20	2.13	1.83	1.22	3.58	2.38	2.12	1.41	3.94	2.62	2.46	1.64
	34	3.62	2.41	1.97	1.31	4.04	2.69	2.31	1.53	4.45	2.96	2.69	1.79
	36	4.06	2.70	2.12	1.41	4.53	3.01	2.50	1.66	4.99	3.32	2.92	1.94
	38	4.52	3.01	2.28	1.52	5.05	3.36	2.69	1.79	5.56	3.70	3.14	2.09
	40	5.01	3.33	2.44	1.62	5.59	3.72	2.88	1.91	6.16	4.10	3.37	2.24
Other Constants and Properties													
$b_y \times 10^3$, (kip-ft)$^{-1}$		4.71		3.14		5.22		3.48		5.77		3.84	
$t_y \times 10^3$, (kips)$^{-1}$		0.930		0.619		1.02		0.682		1.12		0.746	
$t_r \times 10^3$, (kips)$^{-1}$		1.14		0.762		1.26		0.839		1.38		0.918	
r_x/r_y		3.11				3.12				3.12			
r_y, in.		2.92				2.90				2.89			

[c] Shape is slender for compression with F_y = 50 ksi.

W21

Table 6-1 (continued)
Combined Flexure and Axial Force
W-Shapes

$F_y = 50$ ksi

Shape		W21×											
		93				83[c]				73[c]			
Design		$p \times 10^3$ (kips)$^{-1}$		$b_x \times 10^3$ (kip-ft)$^{-1}$		$p \times 10^3$ (kips)$^{-1}$		$b_x \times 10^3$ (kip-ft)$^{-1}$		$p \times 10^3$ (kips)$^{-1}$		$b_x \times 10^3$ (kip-ft)$^{-1}$	
		ASD	LRFD	ASD	LRFD	ASD	LRFD	ASD	LRFD	ASD	LRFD	ASD	LRFD
Effective length, KL (ft), with respect to least radius of gyration, r_y, or Unbraced Length, L_b (ft), for X-X axis bending	0	1.22	0.814	1.61	1.07	1.38	0.916	1.82	1.21	1.62	1.08	2.07	1.38
	6	1.37	0.910	1.61	1.07	1.53	1.02	1.82	1.21	1.78	1.19	2.07	1.38
	7	1.42	0.948	1.63	1.09	1.60	1.06	1.85	1.23	1.85	1.23	2.11	1.40
	8	1.49	0.993	1.68	1.12	1.67	1.11	1.90	1.26	1.93	1.28	2.18	1.45
	9	1.57	1.05	1.73	1.15	1.77	1.17	1.96	1.30	2.02	1.35	2.25	1.49
	10	1.67	1.11	1.78	1.18	1.87	1.25	2.02	1.34	2.14	1.43	2.32	1.55
	11	1.78	1.19	1.83	1.22	2.00	1.33	2.09	1.39	2.29	1.52	2.40	1.60
	12	1.91	1.27	1.89	1.25	2.15	1.43	2.16	1.43	2.47	1.64	2.49	1.66
	13	2.07	1.38	1.95	1.29	2.33	1.55	2.23	1.48	2.67	1.78	2.58	1.72
	14	2.25	1.50	2.01	1.34	2.53	1.69	2.31	1.54	2.92	1.94	2.68	1.79
	15	2.46	1.64	2.08	1.38	2.78	1.85	2.40	1.60	3.20	2.13	2.79	1.86
	16	2.71	1.80	2.15	1.43	3.06	2.04	2.49	1.66	3.54	2.35	2.91	1.94
	17	3.01	2.00	2.23	1.48	3.40	2.26	2.59	1.72	3.93	2.62	3.04	2.02
	18	3.36	2.23	2.32	1.54	3.80	2.53	2.70	1.80	4.41	2.93	3.18	2.11
	19	3.74	2.49	2.41	1.60	4.23	2.82	2.82	1.88	4.91	3.27	3.33	2.22
	20	4.15	2.76	2.51	1.67	4.69	3.12	2.95	1.96	5.44	3.62	3.58	2.38
	22	5.02	3.34	2.77	1.84	5.67	3.78	3.37	2.24	6.58	4.38	4.13	2.75
	24	5.97	3.97	3.12	2.07	6.75	4.49	3.81	2.53	7.83	5.21	4.68	3.12
	26	7.01	4.66	3.46	2.30	7.93	5.27	4.25	2.83	9.19	6.12	5.24	3.49
	28	8.13	5.41	3.81	2.54	9.19	6.12	4.69	3.12	10.7	7.09	5.81	3.86
	30	9.33	6.21	4.16	2.77	10.6	7.02	5.13	3.41	12.2	8.14	6.37	4.24

Other Constants and Properties						
$b_y \times 10^3$, (kip-ft)$^{-1}$	10.3	6.83	11.7	7.77	13.4	8.91
$t_y \times 10^3$, (kips)$^{-1}$	1.22	0.814	1.37	0.911	1.55	1.03
$t_r \times 10^3$, (kips)$^{-1}$	1.50	1.00	1.68	1.12	1.91	1.27
r_x/r_y	4.73		4.74		4.77	
r_y, in.	1.84		1.83		1.81	

[c] Shape is slender for compression with $F_y = 50$ ksi.

Note: Heavy line indicates KL/r_y equal to or greater than 200.

Table 6-1 (continued)
Combined Flexure and Axial Force
W-Shapes

F_y = 50 ksi

W21

Shape		W21×											
		68[c]				62[c]				57[c]			
Design		$p \times 10^3$ (kips)$^{-1}$		$b_x \times 10^3$ (kip-ft)$^{-1}$		$p \times 10^3$ (kips)$^{-1}$		$b_x \times 10^3$ (kip-ft)$^{-1}$		$p \times 10^3$ (kips)$^{-1}$		$b_x \times 10^3$ (kip-ft)$^{-1}$	
		ASD	LRFD	ASD	LRFD	ASD	LRFD	ASD	LRFD	ASD	LRFD	ASD	LRFD
Effective length, KL (ft), with respect to least radius of gyration, r_y, or Unbraced Length, L_b (ft), for X-X axis bending	0	1.77	1.18	2.23	1.48	1.98	1.31	2.47	1.65	2.18	1.45	2.76	1.84
	6	1.95	1.30	2.23	1.48	2.18	1.45	2.47	1.65	2.56	1.71	2.91	1.94
	7	2.02	1.34	2.27	1.51	2.26	1.50	2.54	1.69	2.73	1.82	3.04	2.03
	8	2.10	1.40	2.35	1.56	2.35	1.56	2.62	1.74	2.94	1.96	3.19	2.12
	9	2.21	1.47	2.43	1.62	2.47	1.64	2.71	1.81	3.21	2.14	3.35	2.23
	10	2.33	1.55	2.51	1.67	2.61	1.74	2.81	1.87	3.56	2.37	3.53	2.35
	11	2.48	1.65	2.61	1.73	2.78	1.85	2.92	1.94	4.02	2.68	3.73	2.48
	12	2.67	1.77	2.70	1.80	2.98	1.98	3.04	2.02	4.60	3.06	3.95	2.63
	13	2.89	1.92	2.81	1.87	3.22	2.14	3.16	2.10	5.32	3.54	4.20	2.79
	14	3.16	2.10	2.93	1.95	3.53	2.35	3.30	2.19	6.17	4.10	4.48	2.98
	15	3.47	2.31	3.05	2.03	3.89	2.59	3.44	2.29	7.08	4.71	4.94	3.29
	16	3.84	2.55	3.19	2.12	4.31	2.87	3.61	2.40	8.06	5.36	5.47	3.64
	17	4.27	2.84	3.34	2.22	4.83	3.21	3.78	2.52	9.10	6.05	6.01	4.00
	18	4.79	3.19	3.50	2.33	5.41	3.60	3.98	2.65	10.2	6.79	6.55	4.36
	19	5.34	3.55	3.72	2.48	6.03	4.01	4.33	2.88	11.4	7.56	7.10	4.72
	20	5.91	3.93	4.03	2.68	6.68	4.45	4.70	3.13	12.6	8.38	7.65	5.09
	22	7.16	4.76	4.66	3.10	8.09	5.38	5.46	3.63	15.2	10.1	8.76	5.83
	24	8.52	5.67	5.31	3.53	9.63	6.40	6.24	4.15				
	26	9.99	6.65	5.95	3.96	11.3	7.52	7.02	4.67				
	28	11.6	7.71	6.60	4.39	13.1	8.72	7.81	5.20				
	30	13.3	8.85	7.26	4.83								
Other Constants and Properties													
$b_y \times 10^3$, (kip-ft)$^{-1}$		14.6		9.71		16.4		10.9		24.1		16.0	
$t_y \times 10^3$, (kips)$^{-1}$		1.67		1.11		1.83		1.21		2.00		1.33	
$t_r \times 10^3$, (kips)$^{-1}$		2.05		1.37		2.24		1.49		2.46		1.64	
r_x/r_y		4.78				4.82				6.19			
r_y, in.		1.80				1.77				1.35			

[c] Shape is slender for compression with F_y = 50 ksi.

Note: Heavy line indicates KL/r_y equal to or greater than 200.

W21

Table 6-1 (continued)
Combined Flexure and Axial Force
W-Shapes

F_y = 50 ksi

Shape		W21×											
		55[c]				50[c]				48[c,f]			
Design		$p \times 10^3$ (kips)$^{-1}$		$b_x \times 10^3$ (kip-ft)$^{-1}$		$p \times 10^3$ (kips)$^{-1}$		$b_x \times 10^3$ (kip-ft)$^{-1}$		$p \times 10^3$ (kips)$^{-1}$		$b_x \times 10^3$ (kip-ft)$^{-1}$	
		ASD	LRFD	ASD	LRFD	ASD	LRFD	ASD	LRFD	ASD	LRFD	ASD	LRFD
Effective length, KL (ft), with respect to least radius of gyration, r_y, or Unbraced Length, L_b (ft), for X-X axis bending	0	2.29	1.52	2.83	1.88	2.54	1.69	3.24	2.15	2.71	1.80	3.36	2.23
	6	2.52	1.68	2.83	1.88	3.01	2.00	3.45	2.30	3.00	1.99	3.36	2.23
	7	2.61	1.74	2.92	1.94	3.22	2.14	3.63	2.41	3.11	2.07	3.47	2.31
	8	2.73	1.81	3.02	2.01	3.48	2.31	3.81	2.54	3.25	2.16	3.61	2.40
	9	2.86	1.91	3.14	2.09	3.81	2.54	4.02	2.68	3.42	2.28	3.76	2.50
	10	3.03	2.02	3.27	2.17	4.25	2.82	4.26	2.83	3.63	2.42	3.92	2.61
	11	3.23	2.15	3.40	2.26	4.83	3.21	4.52	3.01	3.88	2.58	4.10	2.73
	12	3.47	2.31	3.55	2.36	5.57	3.71	4.82	3.21	4.19	2.79	4.30	2.86
	13	3.76	2.50	3.71	2.47	6.52	4.34	5.16	3.43	4.56	3.04	4.51	3.00
	14	4.11	2.73	3.89	2.59	7.56	5.03	5.67	3.77	5.02	3.34	4.74	3.16
	15	4.55	3.03	4.08	2.71	8.68	5.77	6.36	4.23	5.60	3.72	5.01	3.33
	16	5.07	3.38	4.29	2.86	9.87	6.57	7.06	4.70	6.31	4.20	5.30	3.52
	17	5.71	3.80	4.53	3.01	11.1	7.42	7.78	5.17	7.13	4.74	5.75	3.82
	18	6.40	4.26	4.92	3.27	12.5	8.31	8.51	5.66	7.99	5.32	6.35	4.22
	19	7.13	4.75	5.38	3.58	13.9	9.26	9.24	6.15	8.90	5.92	6.97	4.63
	20	7.90	5.26	5.86	3.90	15.4	10.3	9.99	6.65	9.86	6.56	7.60	5.06
	21	8.71	5.80	6.34	4.22	17.0	11.3	10.7	7.15	10.9	7.23	8.25	5.49
	22	9.56	6.36	6.84	4.55					11.9	7.94	8.91	5.93
	23	10.5	6.95	7.34	4.88					13.0	8.68	9.58	6.37
	24	11.4	7.57	7.84	5.22					14.2	9.45	10.3	6.82
	25	12.3	8.22	8.35	5.56					15.4	10.3	10.9	7.28
	26	13.4	8.89	8.87	5.90					16.7	11.1	11.6	7.75
	27	14.4	9.58	9.38	6.24					18.0	12.0	12.3	8.22
	28	15.5	10.3	9.90	6.59								
Other Constants and Properties													
$b_y \times 10^3$, (kip-ft)$^{-1}$		19.4		12.9		29.2		19.4		24.2		16.1	
$f_y \times 10^3$, (kips)$^{-1}$		2.06		1.37		2.27		1.51		2.37		1.58	
$f_r \times 10^3$, (kips)$^{-1}$		2.53		1.69		2.79		1.86		2.91		1.94	
r_x/r_y		4.86				6.29				4.96			
r_y, in.		1.73				1.30				1.66			

[c] Shape is slender for compression with F_y = 50 ksi.

[f] Shape does not meet compact limit for flexure with F_y = 50 ksi.

Note: Heavy line indicates KL/r_y equal to or greater than 200.

Table 6-1 (continued)
Combined Flexure and Axial Force
W-Shapes

F_y = 50 ksi

W21-W18

Shape		W21×				W18×							
		44[c]				311[h]				283[h]			
Design		$p \times 10^3$ (kips)$^{-1}$		$b_x \times 10^3$ (kip-ft)$^{-1}$		$p \times 10^3$ (kips)$^{-1}$		$b_x \times 10^3$ (kip-ft)$^{-1}$		$p \times 10^3$ (kips)$^{-1}$		$b_x \times 10^3$ (kip-ft)$^{-1}$	
		ASD	LRFD	ASD	LRFD	ASD	LRFD	ASD	LRFD	ASD	LRFD	ASD	LRFD
Effective length, KL (ft), with respect to least radius of gyration, r_y, or Unbraced Length, L_b (ft), for X-X axis bending	0	2.97	1.98	3.73	2.48	0.365	0.243	0.473	0.314	0.401	0.267	0.527	0.351
	6	3.53	2.35	4.03	2.68	0.381	0.253	0.473	0.314	0.419	0.279	0.527	0.351
	7	3.78	2.51	4.24	2.82	0.387	0.257	0.473	0.314	0.426	0.284	0.527	0.351
	8	4.09	2.72	4.48	2.98	0.394	0.262	0.473	0.314	0.434	0.289	0.527	0.351
	9	4.50	3.00	4.75	3.16	0.402	0.268	0.473	0.314	0.443	0.295	0.527	0.351
	10	5.03	3.35	5.05	3.36	0.412	0.274	0.473	0.314	0.454	0.302	0.527	0.351
	11	5.74	3.82	5.39	3.59	0.422	0.281	0.474	0.315	0.466	0.310	0.530	0.352
	12	6.68	4.45	5.79	3.85	0.434	0.289	0.477	0.317	0.480	0.319	0.533	0.355
	13	7.84	5.22	6.25	4.16	0.447	0.298	0.480	0.319	0.495	0.329	0.537	0.357
	14	9.10	6.05	7.11	4.73	0.462	0.308	0.483	0.321	0.512	0.340	0.540	0.359
	15	10.4	6.95	7.99	5.32	0.479	0.319	0.486	0.323	0.530	0.353	0.544	0.362
	16	11.9	7.91	8.90	5.92	0.497	0.331	0.489	0.325	0.551	0.367	0.548	0.364
	17	13.4	8.93	9.83	6.54	0.517	0.344	0.492	0.327	0.574	0.382	0.551	0.367
	18	15.0	10.0	10.8	7.18	0.540	0.359	0.495	0.329	0.600	0.399	0.555	0.369
	19	16.8	11.1	11.8	7.82	0.564	0.375	0.498	0.331	0.628	0.418	0.559	0.372
	20	18.6	12.4	12.7	8.47	0.592	0.394	0.501	0.333	0.659	0.439	0.563	0.374
	22					0.655	0.436	0.507	0.338	0.732	0.487	0.571	0.380
	24					0.732	0.487	0.514	0.342	0.821	0.546	0.579	0.385
	26					0.826	0.550	0.521	0.347	0.929	0.618	0.588	0.391
	28					0.942	0.627	0.528	0.351	1.06	0.708	0.596	0.397
	30					1.08	0.720	0.535	0.356	1.22	0.813	0.605	0.403
	32					1.23	0.819	0.542	0.361	1.39	0.925	0.614	0.409
	34					1.39	0.924	0.550	0.366	1.57	1.04	0.624	0.415
	36					1.56	1.04	0.557	0.371	1.76	1.17	0.634	0.422
	38					1.74	1.15	0.565	0.376	1.96	1.30	0.644	0.428
	40					1.92	1.28	0.573	0.382	2.17	1.45	0.654	0.435
Other Constants and Properties													
$b_y \times 10^3$, (kip-ft)$^{-1}$		35.0		23.3		1.72		1.15		1.93		1.28	
$t_y \times 10^3$, (kips)$^{-1}$		2.57		1.71		0.365		0.243		0.401		0.267	
$t_r \times 10^3$, (kips)$^{-1}$		3.16		2.10		0.448		0.299		0.493		0.328	
r_x/r_y		6.40				2.96				2.96			
r_y, in.		1.26				2.95				2.91			

[c] Shape is slender for compression with F_y = 50 ksi.

[h] Flange thickness greater than 2 in. Special requirements may apply per AISC *Specification* Section A3.1c.

Note: Heavy line indicates KL/r_y equal to or greater than 200.

Table 6-1 (continued)
Combined Flexure and Axial Force
W-Shapes

F_y = 50 ksi

W18

Shape		W18×											
		258[h]				234[h]				211			
Design		$p \times 10^3$ (kips)$^{-1}$		$b_x \times 10^3$ (kip-ft)$^{-1}$		$p \times 10^3$ (kips)$^{-1}$		$b_x \times 10^3$ (kip-ft)$^{-1}$		$p \times 10^3$ (kips)$^{-1}$		$b_x \times 10^3$ (kip-ft)$^{-1}$	
		ASD	LRFD	ASD	LRFD	ASD	LRFD	ASD	LRFD	ASD	LRFD	ASD	LRFD
Effective length, KL (ft), with respect to least radius of gyration, r_y, or Unbraced Length, L_b (ft), for X-X axis bending	0	0.439	0.292	0.583	0.388	0.487	0.324	0.649	0.432	0.536	0.357	0.727	0.484
	6	0.460	0.306	0.583	0.388	0.510	0.339	0.649	0.432	0.562	0.374	0.727	0.484
	7	0.468	0.311	0.583	0.388	0.519	0.345	0.649	0.432	0.572	0.381	0.727	0.484
	8	0.477	0.317	0.583	0.388	0.529	0.352	0.649	0.432	0.584	0.388	0.727	0.484
	9	0.487	0.324	0.583	0.388	0.541	0.360	0.649	0.432	0.597	0.397	0.727	0.484
	10	0.499	0.332	0.583	0.388	0.554	0.369	0.649	0.432	0.612	0.407	0.727	0.484
	11	0.512	0.341	0.587	0.390	0.570	0.379	0.654	0.435	0.629	0.419	0.734	0.488
	12	0.528	0.351	0.591	0.393	0.587	0.390	0.659	0.438	0.649	0.432	0.740	0.493
	13	0.545	0.362	0.595	0.396	0.606	0.403	0.664	0.442	0.671	0.446	0.747	0.497
	14	0.564	0.375	0.600	0.399	0.628	0.418	0.670	0.446	0.695	0.462	0.754	0.502
	15	0.585	0.389	0.604	0.402	0.652	0.434	0.675	0.449	0.722	0.480	0.761	0.506
	16	0.608	0.405	0.609	0.405	0.678	0.451	0.681	0.453	0.752	0.501	0.768	0.511
	17	0.634	0.422	0.613	0.408	0.708	0.471	0.687	0.457	0.786	0.523	0.775	0.516
	18	0.663	0.441	0.618	0.411	0.741	0.493	0.692	0.461	0.823	0.548	0.782	0.520
	19	0.695	0.462	0.623	0.414	0.777	0.517	0.698	0.465	0.865	0.575	0.790	0.525
	20	0.730	0.486	0.627	0.417	0.818	0.544	0.704	0.469	0.910	0.606	0.797	0.531
	22	0.812	0.541	0.637	0.424	0.912	0.607	0.717	0.477	1.02	0.677	0.813	0.541
	24	0.913	0.607	0.648	0.431	1.03	0.683	0.729	0.485	1.15	0.765	0.829	0.552
	26	1.04	0.690	0.658	0.438	1.17	0.778	0.742	0.494	1.31	0.873	0.846	0.563
	28	1.19	0.793	0.669	0.445	1.35	0.897	0.756	0.503	1.52	1.01	0.864	0.575
	30	1.37	0.910	0.680	0.453	1.55	1.03	0.770	0.513	1.74	1.16	0.882	0.587
	32	1.56	1.04	0.692	0.460	1.76	1.17	0.785	0.522	1.98	1.32	0.902	0.600
	34	1.76	1.17	0.704	0.468	1.99	1.32	0.800	0.533	2.24	1.49	0.922	0.613
	36	1.97	1.31	0.716	0.477	2.23	1.48	0.816	0.543	2.51	1.67	0.943	0.627
	38	2.19	1.46	0.729	0.485	2.48	1.65	0.833	0.554	2.79	1.86	0.965	0.642
	40	2.43	1.62	0.743	0.494	2.75	1.83	0.850	0.566	3.09	2.06	0.988	0.657
Other Constants and Properties													
$b_y \times 10^3$, (kip-ft)$^{-1}$		2.15		1.43		2.39		1.59		2.70		1.80	
$t_y \times 10^3$, (kips)$^{-1}$		0.439		0.292		0.487		0.324		0.536		0.357	
$t_r \times 10^3$, (kips)$^{-1}$		0.540		0.360		0.598		0.399		0.659		0.439	
r_x/r_y		2.96				2.96				2.96			
r_y, in.		2.88				2.85				2.82			

[h] Flange thickness greater than 2 in. Special requirements may apply per AISC *Specification* Section A3.1c.

Table 6-1 (continued)
Combined Flexure and Axial Force
W-Shapes

F_y = 50 ksi

W18

Shape		W18×											
		192				175				158			
Design		$p \times 10^3$ (kips)$^{-1}$		$b_x \times 10^3$ (kip-ft)$^{-1}$		$p \times 10^3$ (kips)$^{-1}$		$b_x \times 10^3$ (kip-ft)$^{-1}$		$p \times 10^3$ (kips)$^{-1}$		$b_x \times 10^3$ (kip-ft)$^{-1}$	
		ASD	LRFD	ASD	LRFD	ASD	LRFD	ASD	LRFD	ASD	LRFD	ASD	LRFD
Effective length, KL (ft), with respect to least radius of gyration, r_y, or Unbraced Length, L_b (ft), for X-X axis bending	0	0.594	0.395	0.806	0.536	0.650	0.432	0.895	0.596	0.721	0.480	1.00	0.666
	6	0.624	0.415	0.806	0.536	0.683	0.454	0.895	0.596	0.759	0.505	1.00	0.666
	7	0.635	0.423	0.806	0.536	0.695	0.463	0.895	0.596	0.773	0.514	1.00	0.666
	8	0.648	0.431	0.806	0.536	0.710	0.472	0.895	0.596	0.789	0.525	1.00	0.666
	9	0.663	0.441	0.806	0.536	0.727	0.484	0.895	0.596	0.808	0.538	1.00	0.666
	10	0.680	0.453	0.807	0.537	0.746	0.496	0.898	0.597	0.830	0.552	1.00	0.668
	11	0.700	0.466	0.815	0.542	0.768	0.511	0.907	0.604	0.855	0.569	1.02	0.676
	12	0.722	0.480	0.823	0.548	0.793	0.528	0.917	0.610	0.883	0.587	1.03	0.685
	13	0.747	0.497	0.831	0.553	0.821	0.546	0.927	0.617	0.914	0.608	1.04	0.693
	14	0.775	0.515	0.840	0.559	0.852	0.567	0.938	0.624	0.950	0.632	1.05	0.702
	15	0.806	0.536	0.848	0.564	0.887	0.590	0.946	0.631	0.989	0.658	1.07	0.710
	16	0.840	0.559	0.857	0.570	0.926	0.616	0.959	0.638	1.03	0.687	1.08	0.719
	17	0.879	0.585	0.866	0.576	0.969	0.645	0.970	0.645	1.08	0.720	1.10	0.729
	18	0.921	0.613	0.875	0.582	1.02	0.677	0.981	0.653	1.14	0.756	1.11	0.738
	19	0.968	0.644	0.884	0.588	1.07	0.712	0.993	0.661	1.20	0.796	1.12	0.748
	20	1.02	0.679	0.894	0.595	1.13	0.752	1.00	0.669	1.26	0.841	1.14	0.758
	22	1.14	0.761	0.913	0.608	1.27	0.844	1.03	0.685	1.42	0.946	1.17	0.779
	24	1.30	0.862	0.934	0.621	1.44	0.958	1.06	0.702	1.62	1.08	1.20	0.801
	26	1.48	0.987	0.955	0.636	1.65	1.10	1.08	0.720	1.86	1.24	1.24	0.824
	28	1.72	1.14	0.978	0.651	1.92	1.28	1.11	0.739	2.16	1.44	1.28	0.849
	30	1.97	1.31	1.00	0.666	2.20	1.47	1.14	0.759	2.48	1.65	1.32	0.875
	32	2.24	1.49	1.03	0.683	2.51	1.67	1.17	0.780	2.82	1.88	1.36	0.903
	34	2.53	1.68	1.05	0.700	2.83	1.88	1.21	0.803	3.19	2.12	1.40	0.933
	36	2.84	1.89	1.08	0.718	3.17	2.11	1.24	0.827	3.57	2.38	1.45	0.965
	38	3.16	2.10	1.11	0.737	3.53	2.35	1.28	0.852	3.98	2.65	1.50	0.999
	40	3.50	2.33	1.14	0.757	3.91	2.60	1.32	0.878	4.41	2.93	1.56	1.04
Other Constants and Properties													
$b_y \times 10^3$, (kip-ft)$^{-1}$		2.99		1.99		3.36		2.24		3.76		2.50	
$t_y \times 10^3$, (kips)$^{-1}$		0.594		0.395		0.650		0.432		0.721		0.480	
$t_r \times 10^3$, (kips)$^{-1}$		0.730		0.487		0.798		0.532		0.886		0.591	
r_x/r_y		2.97				2.97				2.96			
r_y, in.		2.79				2.76				2.74			

W18

Table 6-1 (continued)
Combined Flexure and Axial Force
W-Shapes

F_y = 50 ksi

Shape		W18×											
		143				130				119			
Design		$p \times 10^3$ (kips)$^{-1}$		$b_x \times 10^3$ (kip-ft)$^{-1}$		$p \times 10^3$ (kips)$^{-1}$		$b_x \times 10^3$ (kip-ft)$^{-1}$		$p \times 10^3$ (kips)$^{-1}$		$b_x \times 10^3$ (kip-ft)$^{-1}$	
		ASD	LRFD	ASD	LRFD	ASD	LRFD	ASD	LRFD	ASD	LRFD	ASD	LRFD
Effective length, KL (ft), with respect to least radius of gyration, r_y, or Unbraced Length, L_b (ft), for X-X axis bending	0	0.795	0.529	1.11	0.736	0.872	0.580	1.23	0.817	0.952	0.633	1.36	0.905
	6	0.837	0.557	1.11	0.736	0.919	0.611	1.23	0.817	1.00	0.667	1.36	0.905
	7	0.853	0.567	1.11	0.736	0.936	0.623	1.23	0.817	1.02	0.680	1.36	0.905
	8	0.871	0.580	1.11	0.736	0.957	0.636	1.23	0.817	1.04	0.695	1.36	0.905
	9	0.892	0.594	1.11	0.736	0.980	0.652	1.23	0.817	1.07	0.712	1.36	0.905
	10	0.917	0.610	1.11	0.740	1.01	0.670	1.24	0.823	1.10	0.732	1.37	0.912
	11	0.945	0.629	1.13	0.750	1.04	0.691	1.25	0.835	1.13	0.755	1.39	0.926
	12	0.976	0.649	1.14	0.760	1.07	0.714	1.27	0.847	1.17	0.781	1.41	0.941
	13	1.01	0.673	1.16	0.770	1.11	0.741	1.29	0.859	1.22	0.810	1.44	0.956
	14	1.05	0.699	1.17	0.780	1.16	0.770	1.31	0.872	1.27	0.842	1.46	0.972
	15	1.10	0.729	1.19	0.791	1.21	0.803	1.33	0.886	1.32	0.878	1.49	0.989
	16	1.14	0.762	1.21	0.802	1.26	0.840	1.35	0.899	1.38	0.919	1.51	1.01
	17	1.20	0.798	1.22	0.814	1.32	0.881	1.37	0.913	1.45	0.964	1.54	1.02
	18	1.26	0.839	1.24	0.825	1.39	0.926	1.39	0.928	1.52	1.01	1.57	1.04
	19	1.33	0.884	1.26	0.838	1.47	0.977	1.42	0.943	1.61	1.07	1.59	1.06
	20	1.41	0.935	1.28	0.850	1.55	1.03	1.44	0.959	1.70	1.13	1.62	1.08
	22	1.58	1.05	1.32	0.876	1.75	1.17	1.49	0.992	1.92	1.28	1.69	1.12
	24	1.81	1.20	1.36	0.904	2.00	1.33	1.54	1.03	2.20	1.46	1.75	1.17
	26	2.08	1.39	1.40	0.933	2.32	1.54	1.60	1.06	2.55	1.70	1.83	1.21
	28	2.42	1.61	1.45	0.965	2.69	1.79	1.66	1.10	2.96	1.97	1.90	1.27
	30	2.77	1.85	1.50	0.999	3.09	2.05	1.73	1.15	3.39	2.26	1.99	1.32
	32	3.16	2.10	1.56	1.03	3.51	2.34	1.80	1.20	3.86	2.57	2.08	1.39
	34	3.56	2.37	1.61	1.07	3.97	2.64	1.87	1.25	4.36	2.90	2.19	1.46
	36	4.00	2.66	1.68	1.12	4.45	2.96	1.96	1.30	4.89	3.25	2.34	1.56
	38	4.45	2.96	1.74	1.16	4.95	3.30	2.08	1.38	5.45	3.62	2.50	1.66
	40	4.93	3.28	1.82	1.21	5.49	3.65	2.20	1.47	6.04	4.02	2.65	1.77
Other Constants and Properties													
$b_y \times 10^3$, (kip-ft)$^{-1}$		4.17		2.78		4.64		3.09		5.16		3.43	
$t_y \times 10^3$, (kips)$^{-1}$		0.795		0.529		0.872		0.580		0.952		0.633	
$t_r \times 10^3$, (kips)$^{-1}$		0.977		0.651		1.07		0.714		1.17		0.779	
r_x/r_y		2.97				2.97				2.94			
r_y, in.		2.72				2.70				2.69			

F_y = 50 ksi

Table 6-1 (continued)
Combined Flexure and Axial Force
W-Shapes

W18

Shape		W18×											
		106				97				86			
Design		$p \times 10^3$ (kips)$^{-1}$		$b_x \times 10^3$ (kip-ft)$^{-1}$		$p \times 10^3$ (kips)$^{-1}$		$b_x \times 10^3$ (kip-ft)$^{-1}$		$p \times 10^3$ (kips)$^{-1}$		$b_x \times 10^3$ (kip-ft)$^{-1}$	
		ASD	LRFD	ASD	LRFD	ASD	LRFD	ASD	LRFD	ASD	LRFD	ASD	LRFD
Effective length, KL (ft), with respect to least radius of gyration, r_y, or Unbraced Length, L_b (ft), for X-X axis bending	0	1.07	0.715	1.55	1.03	1.17	0.780	1.69	1.12	1.32	0.878	1.92	1.27
	6	1.13	0.754	1.55	1.03	1.24	0.823	1.69	1.12	1.39	0.928	1.92	1.27
	7	1.16	0.769	1.55	1.03	1.26	0.839	1.69	1.12	1.42	0.946	1.92	1.27
	8	1.18	0.786	1.55	1.03	1.29	0.858	1.69	1.12	1.46	0.968	1.92	1.27
	9	1.21	0.806	1.55	1.03	1.32	0.880	1.69	1.12	1.49	0.994	1.92	1.27
	10	1.25	0.829	1.56	1.04	1.36	0.906	1.71	1.14	1.54	1.02	1.94	1.29
	11	1.29	0.856	1.59	1.06	1.41	0.935	1.74	1.16	1.59	1.06	1.98	1.32
	12	1.33	0.885	1.62	1.08	1.45	0.968	1.77	1.18	1.64	1.09	2.02	1.35
	13	1.38	0.919	1.65	1.10	1.51	1.00	1.81	1.20	1.71	1.14	2.06	1.37
	14	1.44	0.957	1.68	1.12	1.57	1.05	1.84	1.23	1.78	1.18	2.11	1.40
	15	1.50	0.999	1.71	1.14	1.64	1.09	1.88	1.25	1.86	1.24	2.15	1.43
	16	1.57	1.05	1.74	1.16	1.72	1.14	1.92	1.28	1.95	1.30	2.20	1.47
	17	1.65	1.10	1.78	1.18	1.81	1.20	1.96	1.30	2.05	1.36	2.25	1.50
	18	1.74	1.16	1.81	1.21	1.90	1.27	2.00	1.33	2.16	1.44	2.31	1.53
	19	1.84	1.22	1.85	1.23	2.01	1.34	2.04	1.36	2.29	1.52	2.36	1.57
	20	1.95	1.30	1.89	1.26	2.13	1.42	2.09	1.39	2.43	1.61	2.42	1.61
	22	2.21	1.47	1.97	1.31	2.42	1.61	2.18	1.45	2.76	1.83	2.54	1.69
	24	2.53	1.68	2.06	1.37	2.78	1.85	2.29	1.52	3.17	2.11	2.68	1.79
	26	2.94	1.96	2.15	1.43	3.24	2.15	2.41	1.60	3.70	2.46	2.84	1.89
	28	3.41	2.27	2.26	1.50	3.75	2.50	2.54	1.69	4.29	2.86	3.01	2.00
	30	3.92	2.61	2.38	1.58	4.31	2.87	2.68	1.78	4.93	3.28	3.29	2.19
	32	4.46	2.97	2.51	1.67	4.90	3.26	2.91	1.93	5.61	3.73	3.59	2.39
	34	5.03	3.35	2.72	1.81	5.53	3.68	3.15	2.09	6.33	4.21	3.90	2.60
	36	5.64	3.75	2.92	1.94	6.20	4.13	3.38	2.25	7.10	4.72	4.21	2.80
	38	6.29	4.18	3.12	2.08	6.91	4.60	3.62	2.41	7.91	5.26	4.51	3.00
	40	6.97	4.63	3.32	2.21	7.66	5.10	3.86	2.57	8.76	5.83	4.82	3.21
Other Constants and Properties													
$b_y \times 10^3$, (kip-ft)$^{-1}$		5.89		3.92		6.44		4.29		7.36		4.90	
$t_y \times 10^3$, (kips)$^{-1}$		1.07		0.715		1.17		0.780		1.32		0.878	
$t_r \times 10^3$, (kips)$^{-1}$		1.32		0.879		1.44		0.960		1.62		1.08	
r_x/r_y		2.95				2.95				2.95			
r_y, in.		2.66				2.65				2.63			

W18

Table 6-1 (continued)
Combined Flexure and Axial Force
W-Shapes

F_y = 50 ksi

Shape		W18×											
		76[c]				71				65			
Design		$p \times 10^3$ (kips)$^{-1}$		$b_x \times 10^3$ (kip-ft)$^{-1}$		$p \times 10^3$ (kips)$^{-1}$		$b_x \times 10^3$ (kip-ft)$^{-1}$		$p \times 10^3$ (kips)$^{-1}$		$b_x \times 10^3$ (kip-ft)$^{-1}$	
		ASD	LRFD	ASD	LRFD	ASD	LRFD	ASD	LRFD	ASD	LRFD	ASD	LRFD
Effective length, KL (ft), with respect to least radius of gyration, r_y, or Unbraced Length, L_b (ft), for X-X axis bending	0	1.52	1.01	2.19	1.45	1.60	1.06	2.44	1.62	1.75	1.16	2.68	1.78
	6	1.59	1.06	2.19	1.45	1.82	1.21	2.44	1.62	2.00	1.33	2.68	1.78
	7	1.62	1.08	2.19	1.45	1.91	1.27	2.51	1.67	2.09	1.39	2.76	1.84
	8	1.66	1.10	2.19	1.45	2.02	1.34	2.59	1.72	2.21	1.47	2.85	1.90
	9	1.70	1.13	2.19	1.45	2.15	1.43	2.67	1.78	2.38	1.57	2.95	1.96
	10	1.75	1.16	2.22	1.48	2.30	1.53	2.76	1.83	2.53	1.68	3.05	2.03
	11	1.81	1.20	2.27	1.51	2.48	1.65	2.85	1.90	2.73	1.82	3.15	2.10
	12	1.87	1.24	2.32	1.54	2.70	1.80	2.95	1.96	2.97	1.98	3.27	2.18
	13	1.94	1.29	2.37	1.58	2.96	1.97	3.05	2.03	3.26	2.17	3.39	2.26
	14	2.03	1.35	2.43	1.62	3.26	2.17	3.17	2.11	3.60	2.40	3.53	2.35
	15	2.12	1.41	2.49	1.65	3.63	2.41	3.29	2.19	4.01	2.67	3.67	2.44
	16	2.22	1.48	2.55	1.69	4.06	2.70	3.42	2.28	4.50	2.99	3.83	2.55
	17	2.34	1.56	2.61	1.74	4.58	3.05	3.57	2.37	5.08	3.38	4.00	2.66
	18	2.47	1.64	2.68	1.78	5.14	3.42	3.72	2.48	5.69	3.79	4.19	2.79
	19	2.62	1.74	2.75	1.83	5.73	3.81	3.89	2.59	6.34	4.22	4.43	2.95
	20	2.78	1.85	2.82	1.88	6.34	4.22	4.12	2.74	7.02	4.67	4.76	3.17
	22	3.16	2.11	2.98	1.98	7.68	5.11	4.69	3.12	8.50	5.66	5.44	3.62
	24	3.65	2.43	3.16	2.10	9.14	6.08	5.25	3.50	10.1	6.73	6.11	4.07
	26	4.26	2.84	3.36	2.24	10.7	7.13	5.82	3.87	11.9	7.90	6.79	4.51
	28	4.94	3.29	3.67	2.44	12.4	8.27	6.38	4.25	13.8	9.16	7.46	4.96
	30	5.68	3.78	4.06	2.70								
	32	6.46	4.30	4.45	2.96								
	34	7.29	4.85	4.85	3.22								
	36	8.17	5.44	5.24	3.49								
	38	9.11	6.06	5.64	3.75								
	40	10.1	6.71	6.04	4.02								
Other Constants and Properties													
$b_y \times 10^3$, (kip-ft)$^{-1}$		8.44		5.62		14.4		9.60		15.8		10.5	
$t_y \times 10^3$, (kips)$^{-1}$		1.50		0.997		1.60		1.06		1.75		1.16	
$t_r \times 10^3$, (kips)$^{-1}$		1.84		1.23		1.96		1.31		2.15		1.43	
r_x/r_y		2.96				4.41				4.43			
r_y, in.		2.61				1.70				1.69			

[c] Shape is slender for compression with F_y = 50 ksi.

Note: Heavy line indicates KL/r_y equal to or greater than 200.

F_y = 50 ksi

Table 6-1 (continued)
Combined Flexure and Axial Force
W-Shapes

W18

Shape		W18×											
		60[c]				55[c]				50[c]			
Design		$p \times 10^3$ (kips)$^{-1}$		$b_x \times 10^3$ (kip-ft)$^{-1}$		$p \times 10^3$ (kips)$^{-1}$		$b_x \times 10^3$ (kip-ft)$^{-1}$		$p \times 10^3$ (kips)$^{-1}$		$b_x \times 10^3$ (kip-ft)$^{-1}$	
		ASD	LRFD	ASD	LRFD	ASD	LRFD	ASD	LRFD	ASD	LRFD	ASD	LRFD
Effective length, KL (ft), with respect to least radius of gyration, r_y, or Unbraced Length, L_b (ft), for X-X axis bending	0	1.94	1.29	2.90	1.93	2.14	1.43	3.18	2.12	2.42	1.61	3.53	2.35
	6	2.18	1.45	2.90	1.93	2.40	1.60	3.19	2.12	2.72	1.81	3.55	2.36
	7	2.28	1.52	3.00	1.99	2.51	1.67	3.30	2.20	2.84	1.89	3.68	2.45
	8	2.41	1.60	3.10	2.06	2.64	1.75	3.42	2.27	2.98	1.98	3.81	2.54
	9	2.57	1.71	3.20	2.13	2.80	1.86	3.54	2.36	3.16	2.10	3.96	2.64
	10	2.76	1.83	3.32	2.21	3.01	2.00	3.68	2.45	3.37	2.24	4.12	2.74
	11	2.98	1.98	3.44	2.29	3.26	2.17	3.83	2.55	3.63	2.42	4.29	2.86
	12	3.25	2.16	3.58	2.38	3.55	2.36	3.99	2.65	3.97	2.64	4.48	2.98
	13	3.56	2.37	3.72	2.48	3.90	2.60	4.16	2.77	4.37	2.91	4.69	3.12
	14	3.94	2.62	3.88	2.58	4.32	2.87	4.35	2.89	4.85	3.23	4.91	3.27
	15	4.39	2.92	4.05	2.69	4.82	3.21	4.55	3.03	5.42	3.61	5.16	3.43
	16	4.94	3.28	4.23	2.82	5.43	3.61	4.76	3.18	6.13	4.08	5.44	3.62
	17	5.57	3.71	4.44	2.95	6.13	4.08	5.03	3.35	6.92	4.60	5.76	3.83
	18	6.25	4.16	4.66	3.10	6.87	4.57	5.39	3.59	7.76	5.16	6.31	4.20
	19	6.96	4.63	5.02	3.34	7.65	5.09	5.85	3.89	8.64	5.75	6.86	4.57
	20	7.71	5.13	5.41	3.60	8.48	5.64	6.32	4.20	9.58	6.37	7.43	4.94
	22	9.33	6.21	6.19	4.12	10.3	6.83	7.26	4.83	11.6	7.71	8.56	5.70
	24	11.1	7.39	6.98	4.64	12.2	8.13	8.20	5.46	13.8	9.17	9.72	6.47
	26	13.0	8.67	7.76	5.16	14.3	9.54	9.16	6.09	16.2	10.8	10.9	7.24
	28	15.1	10.1	8.55	5.69								
Other Constants and Properties													
$b_y \times 10^3$, (kip-ft)$^{-1}$		17.3		11.5		19.3		12.8		21.5		14.3	
$t_y \times 10^3$, (kips)$^{-1}$		1.90		1.26		2.06		1.37		2.27		1.51	
$t_r \times 10^3$, (kips)$^{-1}$		2.33		1.55		2.53		1.69		2.79		1.86	
r_x/r_y		4.45				4.44				4.47			
r_y, in.		1.68				1.67				1.65			

[c] Shape is slender for compression with F_y = 50 ksi.

Note: Heavy line indicates KL/r_y equal to or greater than 200.

W18

Table 6-1 (continued)
Combined Flexure and Axial Force
W-Shapes

F_y = 50 ksi

Shape		W18×											
		46[c]				40[c]				35[c]			
Design		$p \times 10^3$ (kips)$^{-1}$		$b_x \times 10^3$ (kip-ft)$^{-1}$		$p \times 10^3$ (kips)$^{-1}$		$b_x \times 10^3$ (kip-ft)$^{-1}$		$p \times 10^3$ (kips)$^{-1}$		$b_x \times 10^3$ (kip-ft)$^{-1}$	
		ASD	LRFD	ASD	LRFD	ASD	LRFD	ASD	LRFD	ASD	LRFD	ASD	LRFD
Effective length, KL (ft), with respect to least radius of gyration, r_y, or Unbraced Length, L_b (ft), for X-X axis bending	0	2.65	1.76	3.93	2.61	3.15	2.10	4.54	3.02	3.71	2.47	5.36	3.56
	6	3.19	2.12	4.19	2.79	3.79	2.52	4.88	3.25	4.49	2.99	5.84	3.89
	7	3.42	2.28	4.39	2.92	4.06	2.70	5.13	3.41	4.83	3.21	6.17	4.11
	8	3.72	2.48	4.61	3.07	4.41	2.94	5.40	3.59	5.27	3.51	6.54	4.35
	9	4.13	2.75	4.85	3.23	4.87	3.24	5.71	3.80	5.85	3.89	6.96	4.63
	10	4.66	3.10	5.12	3.41	5.45	3.63	6.05	4.03	6.61	4.40	7.43	4.94
	11	5.32	3.54	5.43	3.61	6.24	4.15	6.44	4.28	7.63	5.08	7.97	5.30
	12	6.15	4.09	5.77	3.84	7.25	4.82	6.88	4.58	9.00	5.99	8.60	5.72
	13	7.21	4.80	6.16	4.10	8.51	5.66	7.38	4.91	10.6	7.03	9.67	6.43
	14	8.36	5.56	6.69	4.45	9.87	6.56	8.30	5.52	12.2	8.15	11.0	7.29
	15	9.60	6.38	7.45	4.95	11.3	7.54	9.27	6.17	14.1	9.36	12.3	8.17
	16	10.9	7.26	8.21	5.46	12.9	8.57	10.3	6.83	16.0	10.6	13.6	9.07
	17	12.3	8.20	8.98	5.97	14.5	9.68	11.3	7.50	18.1	12.0	15.0	10.0
	18	13.8	9.19	9.75	6.49	16.3	10.9	12.3	8.17	20.2	13.5	16.4	10.9
	19	15.4	10.2	10.5	7.01	18.2	12.1	13.3	8.85	22.6	15.0	17.9	11.9
	20	17.1	11.3	11.3	7.53	20.1	13.4	14.4	9.54	25.0	16.6	19.3	12.8
	21	18.8	12.5	12.1	8.05	22.2	14.8	15.4	10.2				

Other Constants and Properties							
$b_y \times 10^3$, (kip-ft)$^{-1}$	30.5	20.3	35.6	23.7	44.2	29.4
$t_y \times 10^3$, (kips)$^{-1}$	2.47	1.65	2.83	1.88	3.24	2.16
$t_r \times 10^3$, (kips)$^{-1}$	3.04	2.03	3.48	2.32	3.98	2.66
r_x/r_y	5.62		5.68		5.77	
r_y, in.	1.29		1.27		1.22	

[c] Shape is slender for compression with F_y = 50 ksi.

Note: Heavy line indicates KL/r_y equal to or greater than 200.

F_y = 50 ksi

Table 6-1 (continued)
Combined Flexure and Axial Force
W-Shapes

W16

Shape		W16×											
		100				89				77			
Design		$p \times 10^3$ (kips)$^{-1}$		$b_x \times 10^3$ (kip-ft)$^{-1}$		$p \times 10^3$ (kips)$^{-1}$		$b_x \times 10^3$ (kip-ft)$^{-1}$		$p \times 10^3$ (kips)$^{-1}$		$b_x \times 10^3$ (kip-ft)$^{-1}$	
		ASD	LRFD	ASD	LRFD	ASD	LRFD	ASD	LRFD	ASD	LRFD	ASD	LRFD
Effective length, KL (ft), with respect to least radius of gyration, r_y, or Unbraced Length, L_b (ft), for X-X axis bending	0	1.14	0.756	1.80	1.20	1.27	0.848	2.04	1.35	1.48	0.983	2.38	1.58
	6	1.21	0.803	1.80	1.20	1.36	0.902	2.04	1.35	1.57	1.05	2.38	1.58
	7	1.23	0.820	1.80	1.20	1.39	0.922	2.04	1.35	1.61	1.07	2.38	1.58
	8	1.26	0.841	1.80	1.20	1.42	0.946	2.04	1.35	1.65	1.10	2.38	1.58
	9	1.30	0.865	1.80	1.20	1.46	0.973	2.04	1.36	1.70	1.13	2.39	1.59
	10	1.34	0.893	1.83	1.22	1.51	1.01	2.08	1.38	1.76	1.17	2.44	1.62
	11	1.39	0.925	1.86	1.24	1.57	1.04	2.12	1.41	1.82	1.21	2.49	1.65
	12	1.45	0.962	1.89	1.26	1.63	1.08	2.16	1.44	1.89	1.26	2.54	1.69
	13	1.51	1.00	1.93	1.28	1.70	1.13	2.20	1.46	1.98	1.32	2.59	1.72
	14	1.58	1.05	1.96	1.30	1.78	1.18	2.24	1.49	2.07	1.38	2.65	1.76
	15	1.65	1.10	1.99	1.33	1.87	1.24	2.29	1.52	2.18	1.45	2.71	1.80
	16	1.74	1.16	2.03	1.35	1.97	1.31	2.34	1.55	2.30	1.53	2.77	1.84
	17	1.84	1.23	2.07	1.38	2.08	1.39	2.38	1.59	2.43	1.62	2.83	1.89
	18	1.95	1.30	2.11	1.40	2.21	1.47	2.43	1.62	2.59	1.72	2.90	1.93
	19	2.08	1.38	2.15	1.43	2.35	1.57	2.49	1.65	2.76	1.83	2.97	1.98
	20	2.22	1.47	2.19	1.46	2.51	1.67	2.54	1.69	2.95	1.96	3.05	2.03
	22	2.55	1.70	2.28	1.51	2.90	1.93	2.66	1.77	3.41	2.27	3.21	2.14
	24	2.98	1.98	2.37	1.58	3.40	2.26	2.79	1.86	4.00	2.66	3.39	2.26
	26	3.50	2.33	2.48	1.65	3.99	2.65	2.93	1.95	4.70	3.13	3.59	2.39
	28	4.06	2.70	2.59	1.72	4.62	3.08	3.09	2.06	5.45	3.62	3.83	2.55
	30	4.66	3.10	2.72	1.81	5.31	3.53	3.27	2.17	6.25	4.16	4.20	2.80
	32	5.30	3.52	2.85	1.90	6.04	4.02	3.54	2.36	7.12	4.73	4.57	3.04
	34	5.98	3.98	3.04	2.03	6.82	4.54	3.82	2.54	8.03	5.34	4.94	3.29
	36	6.70	4.46	3.26	2.17	7.64	5.09	4.09	2.72	9.01	5.99	5.31	3.53
	38	7.47	4.97	3.47	2.31	8.52	5.67	4.36	2.90	10.0	6.68	5.68	3.78
	40	8.28	5.51	3.68	2.45	9.44	6.28	4.63	3.08	11.1	7.40	6.04	4.02
Other Constants and Properties													
$b_y \times 10^3$, (kip-ft)$^{-1}$		6.49		4.32		7.41		4.93		8.67		5.77	
$t_y \times 10^3$, (kips)$^{-1}$		1.14		0.756		1.27		0.848		1.48		0.983	
$t_r \times 10^3$, (kips)$^{-1}$		1.40		0.930		1.57		1.04		1.82		1.21	
r_x/r_y		2.83				2.83				2.83			
r_y, in.		2.51				2.49				2.47			

W16

Table 6-1 (continued)
Combined Flexure and Axial Force
W-Shapes

F_y = 50 ksi

Shape		W16×											
		67[c]				57				50[c]			
Design		$p \times 10^3$ (kips)$^{-1}$		$b_x \times 10^3$ (kip-ft)$^{-1}$		$p \times 10^3$ (kips)$^{-1}$		$b_x \times 10^3$ (kip-ft)$^{-1}$		$p \times 10^3$ (kips)$^{-1}$		$b_x \times 10^3$ (kip-ft)$^{-1}$	
		ASD	LRFD	ASD	LRFD	ASD	LRFD	ASD	LRFD	ASD	LRFD	ASD	LRFD
Effective length, KL (ft), with respect to least radius of gyration, r_y, or Unbraced Length, L_b (ft), for X-X axis bending	0	1.71	1.14	2.74	1.82	1.99	1.32	3.39	2.26	2.30	1.53	3.87	2.58
	6	1.81	1.21	2.74	1.82	2.31	1.53	3.43	2.28	2.64	1.76	3.92	2.61
	7	1.86	1.23	2.74	1.82	2.43	1.62	3.54	2.35	2.79	1.85	4.06	2.70
	8	1.90	1.27	2.74	1.82	2.59	1.72	3.65	2.43	2.97	1.97	4.21	2.80
	9	1.96	1.31	2.76	1.84	2.77	1.85	3.78	2.51	3.18	2.12	4.36	2.90
	10	2.03	1.35	2.82	1.88	3.00	2.00	3.91	2.60	3.45	2.29	4.53	3.02
	11	2.10	1.40	2.88	1.92	3.27	2.18	4.05	2.70	3.76	2.50	4.72	3.14
	12	2.19	1.46	2.95	1.96	3.59	2.39	4.20	2.80	4.14	2.75	4.91	3.27
	13	2.29	1.52	3.02	2.01	3.98	2.65	4.37	2.91	4.59	3.06	5.13	3.41
	14	2.40	1.59	3.09	2.06	4.45	2.96	4.55	3.03	5.14	3.42	5.37	3.57
	15	2.52	1.68	3.17	2.11	5.02	3.34	4.74	3.15	5.80	3.86	5.63	3.74
	16	2.66	1.77	3.25	2.16	5.70	3.79	4.95	3.29	6.60	4.39	5.91	3.93
	17	2.82	1.87	3.33	2.22	6.44	4.28	5.18	3.45	7.45	4.96	6.23	4.14
	18	2.99	1.99	3.42	2.27	7.22	4.80	5.43	3.61	8.35	5.56	6.74	4.48
	19	3.19	2.12	3.51	2.34	8.04	5.35	5.81	3.86	9.31	6.19	7.28	4.85
	20	3.42	2.27	3.61	2.40	8.91	5.93	6.23	4.14	10.3	6.86	7.83	5.21
	22	3.96	2.63	3.83	2.55	10.8	7.17	7.07	4.70	12.5	8.30	8.93	5.94
	24	4.65	3.10	4.07	2.71	12.8	8.54	7.90	5.26	14.8	9.88	10.0	6.67
	26	5.46	3.63	4.34	2.89	15.1	10.0	8.74	5.82	17.4	11.6	11.1	7.40
	28	6.33	4.21	4.82	3.21								
	30	7.27	4.84	5.31	3.53								
	32	8.27	5.50	5.80	3.86								
	34	9.34	6.21	6.29	4.18								
	36	10.5	6.96	6.77	4.51								
	38	11.7	7.76	7.26	4.83								
	40	12.9	8.60	7.75	5.15								
Other Constants and Properties													
$b_y \times 10^3$, (kip-ft)$^{-1}$		10.0		6.68		18.9		12.5		21.9		14.5	
$t_y \times 10^3$, (kips)$^{-1}$		1.70		1.13		1.99		1.32		2.27		1.51	
$t_r \times 10^3$, (kips)$^{-1}$		2.09		1.40		2.44		1.63		2.79		1.86	
r_x/r_y		2.83				4.20				4.20			
r_y, in.		2.46				1.60				1.59			

[c] Shape is slender for compression with F_y = 50 ksi.

Note: Heavy line indicates KL/r_y equal to or greater than 200.

F_y = 50 ksi

Table 6-1 (continued)
Combined Flexure and Axial Force
W-Shapes

W16

Shape		W16×											
		45[c]				40[c]				36[c]			
Design		$p \times 10^3$ (kips)$^{-1}$		$b_x \times 10^3$ (kip-ft)$^{-1}$		$p \times 10^3$ (kips)$^{-1}$		$b_x \times 10^3$ (kip-ft)$^{-1}$		$p \times 10^3$ (kips)$^{-1}$		$b_x \times 10^3$ (kip-ft)$^{-1}$	
Effective length, KL (ft), with respect to least radius of gyration, r_y, or Unbraced Length, L_b (ft), for X-X axis bending		ASD	LRFD	ASD	LRFD	ASD	LRFD	ASD	LRFD	ASD	LRFD	ASD	LRFD
	0	2.61	1.73	4.33	2.88	3.03	2.02	4.88	3.25	3.42	2.28	5.57	3.70
	6	2.97	1.98	4.40	2.93	3.44	2.29	4.96	3.30	3.91	2.60	5.71	3.80
	7	3.12	2.08	4.56	3.03	3.61	2.40	5.16	3.43	4.10	2.73	5.94	3.95
	8	3.31	2.20	4.74	3.15	3.81	2.54	5.36	3.57	4.35	2.89	6.20	4.12
	9	3.55	2.36	4.92	3.28	4.06	2.70	5.59	3.72	4.65	3.10	6.48	4.31
	10	3.85	2.56	5.13	3.41	4.37	2.91	5.83	3.88	5.03	3.34	6.78	4.51
	11	4.21	2.80	5.35	3.56	4.75	3.16	6.10	4.06	5.49	3.65	7.12	4.74
	12	4.65	3.09	5.59	3.72	5.24	3.48	6.39	4.25	6.07	4.04	7.49	4.98
	13	5.17	3.44	5.86	3.90	5.83	3.88	6.72	4.47	6.81	4.53	7.90	5.26
	14	5.80	3.86	6.15	4.09	6.54	4.35	7.07	4.71	7.70	5.12	8.36	5.56
	15	6.58	4.37	6.47	4.30	7.41	4.93	7.47	4.97	8.80	5.86	8.88	5.91
	16	7.48	4.98	6.82	4.54	8.43	5.61	7.96	5.30	10.0	6.66	9.79	6.51
	17	8.45	5.62	7.36	4.90	9.52	6.33	8.76	5.83	11.3	7.52	10.8	7.19
	18	9.47	6.30	8.03	5.34	10.7	7.10	9.58	6.38	12.7	8.43	11.9	7.89
	19	10.5	7.02	8.70	5.79	11.9	7.91	10.4	6.93	14.1	9.40	12.9	8.59
	20	11.7	7.78	9.37	6.23	13.2	8.77	11.2	7.48	15.6	10.4	14.0	9.31
	21	12.9	8.57	10.0	6.68	14.5	9.66	12.1	8.04	17.3	11.5	15.1	10.0
	22	14.1	9.41	10.7	7.14	15.9	10.6	12.9	8.61	18.9	12.6	16.2	10.8
	23	15.5	10.3	11.4	7.59	17.4	11.6	13.8	9.17	20.7	13.8	17.3	11.5
	24	16.8	11.2	12.1	8.04	19.0	12.6	14.6	9.74	22.5	15.0	18.4	12.2
	25	18.3	12.2	12.8	8.50	20.6	13.7	15.5	10.3	24.4	16.3	19.5	13.0
	26	19.8	13.1	13.5	8.95	22.3	14.8	16.4	10.9				
Other Constants and Properties													
$b_f \times 10^3$, (kip-ft)$^{-1}$		24.6		16.3		28.1		18.7		33.0		21.9	
$t_y \times 10^3$, (kips)$^{-1}$		2.51		1.67		2.83		1.88		3.15		2.10	
$t_r \times 10^3$, (kips)$^{-1}$		3.08		2.06		3.48		2.32		3.87		2.58	
r_x/r_y		4.24				4.22				4.28			
r_y, in.		1.57				1.57				1.52			

[c] Shape is slender for compression with F_y = 50 ksi.

Note: Heavy line indicates KL/r_y equal to or greater than 200.

W16

Table 6-1 (continued)
Combined Flexure and Axial Force
W-Shapes

F_y = 50 ksi

Shape		W16×							
		31[c]				26[c, v]			
Design		$p \times 10^3$ (kips)$^{-1}$		$b_x \times 10^3$ (kip-ft)$^{-1}$		$p \times 10^3$ (kips)$^{-1}$		$b_x \times 10^3$ (kip-ft)$^{-1}$	
		ASD	LRFD	ASD	LRFD	ASD	LRFD	ASD	LRFD
Effective length, KL (ft), with respect to least radius of gyration, r_y, or Unbraced Length, L_b (ft), for X-X axis bending	0	4.09	2.72	6.60	4.39	5.06	3.37	8.06	5.36
	6	5.08	3.38	7.28	4.85	6.33	4.21	9.07	6.03
	7	5.52	3.67	7.71	5.13	6.91	4.60	9.66	6.43
	8	6.10	4.06	8.19	5.45	7.68	5.11	10.3	6.87
	9	6.87	4.57	8.74	5.82	8.70	5.79	11.1	7.39
	10	7.89	5.25	9.37	6.23	10.1	6.72	12.0	7.99
	11	9.28	6.17	10.1	6.71	12.0	8.01	13.1	8.69
	12	11.0	7.34	11.1	7.35	14.3	9.53	15.0	10.0
	13	13.0	8.62	12.6	8.39	16.8	11.2	17.2	11.5
	14	15.0	10.0	14.2	9.45	19.5	13.0	19.5	13.0
	15	17.2	11.5	15.8	10.5	22.4	14.9	21.9	14.6
	16	19.6	13.1	17.5	11.6	25.5	16.9	24.3	16.2
	17	22.2	14.7	19.2	12.8	28.7	19.1	26.7	17.8
	18	24.8	16.5	20.9	13.9	32.2	21.4	29.2	19.4
	19	27.7	18.4	22.6	15.0				
Other Constants and Properties									
$b_y \times 10^3$, (kip-ft)$^{-1}$		50.7		33.7		65.0		43.3	
$t_y \times 10^3$, (kips)$^{-1}$		3.66		2.43		4.35		2.89	
$t_r \times 10^3$, (kips)$^{-1}$		4.49		3.00		5.34		3.56	
r_x/r_y		5.48				5.59			
r_y, in.		1.17				1.12			

[c] Shape is slender for compression with F_y = 50 ksi.
[v] Shape does not meet the h/t_w limit for shear in AISC *Specification* Section G2.1(a) with F_y = 50 ksi; therefore, ϕ_v = 0.90 and Ω_v = 1.67.
Note: Heavy line indicates KL/r_y equal to or greater than 200.

F_y = 50 ksi

Table 6-1 (continued)
Combined Flexure and Axial Force
W-Shapes

W14

Shape		W14×											
		730[h]				665[h]				605[h]			
Design		$p \times 10^3$ (kips)$^{-1}$		$b_x \times 10^3$ (kip-ft)$^{-1}$		$p \times 10^3$ (kips)$^{-1}$		$b_x \times 10^3$ (kip-ft)$^{-1}$		$p \times 10^3$ (kips)$^{-1}$		$b_x \times 10^3$ (kip-ft)$^{-1}$	
		ASD	LRFD	ASD	LRFD	ASD	LRFD	ASD	LRFD	ASD	LRFD	ASD	LRFD
Effective length, KL (ft), with respect to least radius of gyration, r_y, or Unbraced Length, L_b (ft), for X-X axis bending	0	0.155	0.103	0.215	0.143	0.170	0.113	0.241	0.160	0.188	0.125	0.270	0.180
	11	0.165	0.110	0.215	0.143	0.181	0.120	0.241	0.160	0.200	0.133	0.270	0.180
	12	0.166	0.111	0.215	0.143	0.183	0.122	0.241	0.160	0.202	0.134	0.270	0.180
	13	0.168	0.112	0.215	0.143	0.185	0.123	0.241	0.160	0.204	0.136	0.270	0.180
	14	0.171	0.114	0.215	0.143	0.188	0.125	0.241	0.160	0.207	0.138	0.270	0.180
	15	0.173	0.115	0.215	0.143	0.190	0.127	0.241	0.160	0.210	0.140	0.270	0.180
	16	0.176	0.117	0.215	0.143	0.193	0.129	0.241	0.160	0.214	0.142	0.270	0.180
	17	0.178	0.119	0.215	0.143	0.197	0.131	0.241	0.160	0.217	0.145	0.270	0.180
	18	0.181	0.121	0.215	0.143	0.200	0.133	0.242	0.161	0.221	0.147	0.271	0.180
	19	0.185	0.123	0.216	0.143	0.204	0.135	0.242	0.161	0.225	0.150	0.272	0.181
	20	0.188	0.125	0.216	0.144	0.208	0.138	0.242	0.161	0.230	0.153	0.272	0.181
	22	0.196	0.130	0.217	0.144	0.216	0.144	0.243	0.162	0.240	0.160	0.273	0.182
	24	0.205	0.136	0.217	0.145	0.226	0.151	0.244	0.163	0.252	0.167	0.274	0.183
	26	0.215	0.143	0.218	0.145	0.238	0.158	0.245	0.163	0.265	0.176	0.276	0.183
	28	0.226	0.150	0.219	0.146	0.251	0.167	0.246	0.164	0.280	0.186	0.277	0.184
	30	0.239	0.159	0.220	0.146	0.266	0.177	0.247	0.164	0.297	0.197	0.278	0.185
	32	0.254	0.169	0.221	0.147	0.282	0.188	0.248	0.165	0.316	0.210	0.279	0.186
	34	0.270	0.180	0.221	0.147	0.301	0.201	0.249	0.166	0.338	0.225	0.280	0.187
	36	0.289	0.192	0.222	0.148	0.323	0.215	0.250	0.166	0.363	0.241	0.282	0.187
	38	0.310	0.206	0.223	0.148	0.347	0.231	0.251	0.167	0.391	0.260	0.283	0.188
	40	0.334	0.222	0.224	0.149	0.375	0.250	0.252	0.168	0.423	0.282	0.284	0.189
	42	0.361	0.240	0.225	0.150	0.407	0.271	0.253	0.168	0.460	0.306	0.285	0.190
	44	0.392	0.261	0.226	0.150	0.443	0.295	0.254	0.169	0.503	0.335	0.287	0.191
	46	0.429	0.285	0.226	0.151	0.485	0.322	0.255	0.170	0.550	0.366	0.288	0.191
	48	0.467	0.311	0.227	0.151	0.528	0.351	0.256	0.171	0.599	0.399	0.289	0.192
	50	0.506	0.337	0.228	0.152	0.573	0.381	0.257	0.171	0.650	0.432	0.290	0.193
Other Constants and Properties													
$b_y \times 10^3$, (kip-ft)$^{-1}$		0.437		0.290		0.488		0.325		0.546		0.364	
$t_y \times 10^3$, (kips)$^{-1}$		0.155		0.103		0.170		0.113		0.188		0.125	
$t_r \times 10^3$, (kips)$^{-1}$		0.191		0.127		0.209		0.140		0.230		0.154	
r_x/r_y		1.74				1.73				1.71			
r_y, in.		4.69				4.62				4.55			

[h] Flange thickness greater than 2 in. Special requirements may apply per AISC *Specification* Section A3.1c.

Table 6-1 (continued)
Combined Flexure and Axial Force
W-Shapes

W14

F_y = 50 ksi

Shape		W14×											
		550[h]				500[h]				455[h]			
Design		$p \times 10^3$ (kips)$^{-1}$		$b_x \times 10^3$ (kip-ft)$^{-1}$		$p \times 10^3$ (kips)$^{-1}$		$b_x \times 10^3$ (kip-ft)$^{-1}$		$p \times 10^3$ (kips)$^{-1}$		$b_x \times 10^3$ (kip-ft)$^{-1}$	
		ASD	LRFD	ASD	LRFD	ASD	LRFD	ASD	LRFD	ASD	LRFD	ASD	LRFD
Effective length, KL (ft), with respect to least radius of gyration, r_y, or Unbraced Length, L_b (ft), for X-X axis bending	0	0.206	0.137	0.302	0.201	0.227	0.151	0.339	0.226	0.249	0.166	0.381	0.253
	11	0.220	0.146	0.302	0.201	0.242	0.161	0.339	0.226	0.266	0.177	0.381	0.253
	12	0.222	0.148	0.302	0.201	0.245	0.163	0.339	0.226	0.270	0.179	0.381	0.253
	13	0.225	0.150	0.302	0.201	0.249	0.166	0.339	0.226	0.273	0.182	0.381	0.253
	14	0.228	0.152	0.302	0.201	0.252	0.168	0.339	0.226	0.278	0.185	0.381	0.253
	15	0.232	0.154	0.302	0.201	0.256	0.171	0.339	0.226	0.282	0.188	0.381	0.253
	16	0.236	0.157	0.302	0.201	0.261	0.173	0.340	0.226	0.287	0.191	0.381	0.254
	17	0.240	0.160	0.303	0.201	0.265	0.177	0.340	0.227	0.292	0.194	0.382	0.254
	18	0.244	0.162	0.303	0.202	0.270	0.180	0.341	0.227	0.298	0.198	0.383	0.255
	19	0.249	0.166	0.304	0.202	0.276	0.183	0.342	0.228	0.304	0.202	0.384	0.256
	20	0.254	0.169	0.305	0.203	0.282	0.187	0.343	0.228	0.310	0.207	0.385	0.256
	22	0.265	0.177	0.306	0.204	0.295	0.196	0.345	0.229	0.325	0.216	0.387	0.258
	24	0.279	0.185	0.308	0.205	0.309	0.206	0.346	0.230	0.342	0.227	0.389	0.259
	26	0.293	0.195	0.309	0.206	0.327	0.217	0.348	0.232	0.361	0.240	0.392	0.261
	28	0.310	0.207	0.310	0.207	0.346	0.230	0.350	0.233	0.383	0.255	0.394	0.262
	30	0.330	0.219	0.312	0.208	0.368	0.245	0.352	0.234	0.408	0.272	0.396	0.263
	32	0.352	0.234	0.313	0.209	0.394	0.262	0.353	0.235	0.437	0.291	0.398	0.265
	34	0.377	0.251	0.315	0.209	0.422	0.281	0.355	0.236	0.470	0.313	0.400	0.266
	36	0.406	0.270	0.316	0.210	0.455	0.303	0.357	0.238	0.508	0.338	0.403	0.268
	38	0.438	0.292	0.318	0.211	0.493	0.328	0.359	0.239	0.551	0.366	0.405	0.269
	40	0.475	0.316	0.319	0.213	0.536	0.357	0.361	0.240	0.600	0.399	0.407	0.271
	42	0.518	0.345	0.321	0.214	0.586	0.390	0.363	0.241	0.657	0.437	0.409	0.272
	44	0.568	0.378	0.322	0.215	0.643	0.428	0.365	0.243	0.721	0.480	0.412	0.274
	46	0.621	0.413	0.324	0.216	0.703	0.468	0.367	0.244	0.789	0.525	0.414	0.276
	48	0.676	0.450	0.326	0.217	0.765	0.509	0.369	0.245	0.859	0.571	0.417	0.277
	50	0.733	0.488	0.327	0.218	0.830	0.552	0.371	0.247	0.932	0.620	0.419	0.279
Other Constants and Properties													
$b_y \times 10^3$, (kip-ft)$^{-1}$		0.611		0.407		0.683		0.454		0.761		0.506	
$t_y \times 10^3$, (kips)$^{-1}$		0.206		0.137		0.227		0.151		0.249		0.166	
$t_r \times 10^3$, (kips)$^{-1}$		0.253		0.169		0.279		0.186		0.306		0.204	
r_x/r_y		1.70				1.69				1.67			
r_y, in.		4.49				4.43				4.38			

[h] Flange thickness greater than 2 in. Special requirements may apply per AISC *Specification* Section A3.1c.

Table 6-1 (continued)
Combined Flexure and Axial Force
W-Shapes

F_y = 50 ksi

W14

Shape		W14×											
		426[h]				398[h]				370[h]			
Design		$p \times 10^3$ (kips)$^{-1}$		$b_x \times 10^3$ (kip-ft)$^{-1}$		$p \times 10^3$ (kips)$^{-1}$		$b_x \times 10^3$ (kip-ft)$^{-1}$		$p \times 10^3$ (kips)$^{-1}$		$b_x \times 10^3$ (kip-ft)$^{-1}$	
		ASD	LRFD	ASD	LRFD	ASD	LRFD	ASD	LRFD	ASD	LRFD	ASD	LRFD
Effective length, KL (ft), with respect to least radius of gyration, r_y, or Unbraced Length, L_b (ft), for X-X axis bending	0	0.267	0.178	0.410	0.273	0.285	0.190	0.445	0.296	0.306	0.204	0.484	0.322
	11	0.286	0.190	0.410	0.273	0.306	0.203	0.445	0.296	0.329	0.219	0.484	0.322
	12	0.290	0.193	0.410	0.273	0.310	0.206	0.445	0.296	0.333	0.222	0.484	0.322
	13	0.294	0.195	0.410	0.273	0.314	0.209	0.445	0.296	0.338	0.225	0.484	0.322
	14	0.298	0.198	0.410	0.273	0.319	0.212	0.445	0.296	0.343	0.228	0.484	0.322
	15	0.303	0.202	0.410	0.273	0.324	0.216	0.445	0.296	0.349	0.232	0.484	0.322
	16	0.308	0.205	0.411	0.273	0.330	0.220	0.446	0.297	0.355	0.236	0.485	0.323
	17	0.314	0.209	0.412	0.274	0.336	0.224	0.447	0.298	0.362	0.241	0.487	0.324
	18	0.320	0.213	0.413	0.275	0.343	0.228	0.449	0.298	0.369	0.246	0.489	0.325
	19	0.327	0.218	0.414	0.276	0.350	0.233	0.450	0.299	0.377	0.251	0.490	0.326
	20	0.334	0.222	0.415	0.276	0.358	0.238	0.451	0.300	0.386	0.257	0.492	0.327
	22	0.350	0.233	0.418	0.278	0.376	0.250	0.454	0.302	0.405	0.270	0.495	0.329
	24	0.369	0.245	0.420	0.280	0.396	0.263	0.457	0.304	0.427	0.284	0.498	0.331
	26	0.390	0.259	0.423	0.281	0.419	0.279	0.460	0.306	0.453	0.301	0.501	0.334
	28	0.414	0.276	0.425	0.283	0.445	0.296	0.462	0.308	0.482	0.321	0.505	0.336
	30	0.442	0.294	0.428	0.285	0.475	0.316	0.465	0.310	0.515	0.343	0.508	0.338
	32	0.474	0.315	0.430	0.286	0.510	0.339	0.468	0.312	0.554	0.368	0.512	0.340
	34	0.510	0.339	0.433	0.288	0.550	0.366	0.471	0.314	0.597	0.397	0.515	0.343
	36	0.551	0.367	0.435	0.290	0.595	0.396	0.474	0.316	0.648	0.431	0.519	0.345
	38	0.599	0.399	0.438	0.291	0.647	0.431	0.477	0.318	0.705	0.469	0.522	0.347
	40	0.654	0.435	0.441	0.293	0.707	0.470	0.480	0.320	0.772	0.514	0.526	0.350
	42	0.718	0.478	0.443	0.295	0.778	0.517	0.484	0.322	0.850	0.566	0.529	0.352
	44	0.788	0.524	0.446	0.297	0.853	0.568	0.487	0.324	0.933	0.621	0.533	0.355
	46	0.861	0.573	0.449	0.299	0.933	0.621	0.490	0.326	1.02	0.679	0.537	0.357
	48	0.938	0.624	0.452	0.300	1.02	0.676	0.493	0.328	1.11	0.739	0.541	0.360
	50	1.02	0.677	0.454	0.302	1.10	0.733	0.496	0.330	1.21	0.802	0.545	0.362
Other Constants and Properties													
$b_y \times 10^3$, (kip-ft)$^{-1}$		0.821		0.546		0.886		0.590		0.963		0.641	
$t_y \times 10^3$, (kips)$^{-1}$		0.267		0.178		0.285		0.190		0.306		0.204	
$t_r \times 10^3$, (kips)$^{-1}$		0.328		0.219		0.351		0.234		0.376		0.251	
r_x/r_y		1.67				1.66				1.66			
r_y, in.		4.34				4.31				4.27			

[h] Flange thickness greater than 2 in. Special requirements may apply per AISC *Specification* Section A3.1c.

W14

Table 6-1 (continued)
Combined Flexure and Axial Force
W-Shapes

F_y = 50 ksi

Shape		W14×											
		342[h]				311[h]				283[h]			
Design		$p \times 10^3$ (kips)$^{-1}$		$b_x \times 10^3$ (kip-ft)$^{-1}$		$p \times 10^3$ (kips)$^{-1}$		$b_x \times 10^3$ (kip-ft)$^{-1}$		$p \times 10^3$ (kips)$^{-1}$		$b_x \times 10^3$ (kip-ft)$^{-1}$	
		ASD	LRFD	ASD	LRFD	ASD	LRFD	ASD	LRFD	ASD	LRFD	ASD	LRFD
Effective length, KL (ft), with respect to least radius of gyration, r_y, or Unbraced Length, L_b (ft), for X-X axis bending	0	0.331	0.220	0.530	0.353	0.365	0.243	0.591	0.393	0.401	0.267	0.657	0.437
	11	0.355	0.236	0.530	0.353	0.393	0.261	0.591	0.393	0.431	0.287	0.657	0.437
	12	0.360	0.239	0.530	0.353	0.398	0.265	0.591	0.393	0.437	0.291	0.657	0.437
	13	0.365	0.243	0.530	0.353	0.404	0.269	0.591	0.393	0.444	0.296	0.657	0.437
	14	0.371	0.247	0.530	0.353	0.411	0.273	0.591	0.393	0.451	0.300	0.657	0.437
	15	0.377	0.251	0.530	0.353	0.418	0.278	0.591	0.393	0.459	0.306	0.658	0.438
	16	0.384	0.256	0.532	0.354	0.426	0.283	0.593	0.395	0.468	0.312	0.661	0.440
	17	0.392	0.261	0.534	0.355	0.434	0.289	0.596	0.396	0.478	0.318	0.663	0.441
	18	0.400	0.266	0.536	0.356	0.443	0.295	0.598	0.398	0.488	0.325	0.666	0.443
	19	0.409	0.272	0.538	0.358	0.453	0.302	0.600	0.399	0.499	0.332	0.669	0.445
	20	0.418	0.278	0.539	0.359	0.464	0.309	0.602	0.401	0.511	0.340	0.672	0.447
	22	0.439	0.292	0.543	0.361	0.488	0.325	0.607	0.404	0.537	0.358	0.677	0.451
	24	0.463	0.308	0.547	0.364	0.515	0.343	0.612	0.407	0.568	0.378	0.683	0.455
	26	0.491	0.327	0.551	0.367	0.547	0.364	0.617	0.410	0.604	0.402	0.689	0.458
	28	0.523	0.348	0.555	0.369	0.583	0.388	0.621	0.413	0.645	0.429	0.695	0.462
	30	0.560	0.373	0.559	0.372	0.625	0.416	0.626	0.417	0.691	0.460	0.701	0.466
	32	0.602	0.401	0.563	0.374	0.673	0.448	0.631	0.420	0.745	0.496	0.707	0.471
	34	0.651	0.433	0.567	0.377	0.729	0.485	0.636	0.423	0.807	0.537	0.713	0.475
	36	0.706	0.470	0.571	0.380	0.792	0.527	0.641	0.427	0.879	0.585	0.720	0.479
	38	0.770	0.513	0.575	0.383	0.865	0.576	0.647	0.430	0.961	0.640	0.726	0.483
	40	0.844	0.562	0.580	0.386	0.951	0.633	0.652	0.434	1.06	0.704	0.733	0.488
	42	0.931	0.619	0.584	0.389	1.05	0.697	0.657	0.437	1.17	0.776	0.740	0.492
	44	1.02	0.680	0.588	0.391	1.15	0.765	0.663	0.441	1.28	0.852	0.747	0.497
	46	1.12	0.743	0.593	0.394	1.26	0.837	0.669	0.445	1.40	0.931	0.754	0.501
	48	1.22	0.809	0.597	0.397	1.37	0.911	0.674	0.449	1.52	1.01	0.761	0.506
	50	1.32	0.878	0.602	0.401	1.49	0.988	0.680	0.452	1.65	1.10	0.768	0.511
Other Constants and Properties													
$b_y \times 10^3$, (kip-ft)$^{-1}$		1.05		0.701		1.17		0.780		1.30		0.865	
$t_y \times 10^3$, (kips)$^{-1}$		0.331		0.220		0.365		0.243		0.401		0.267	
$t_r \times 10^3$, (kips)$^{-1}$		0.406		0.271		0.449		0.299		0.493		0.328	
r_x/r_y		1.65				1.64				1.63			
r_y, in.		4.24				4.20				4.17			

[h] Flange thickness greater than 2 in. Special requirements may apply per AISC *Specification* Section A3.1c.

Table 6-1 (continued)
Combined Flexure and Axial Force
W-Shapes

F_y = 50 ksi

W14

Shape		W14×											
		257				233				211			
Design		$p \times 10^3$ (Kips)$^{-1}$		$b_x \times 10^3$ (kip-ft)$^{-1}$		$p \times 10^3$ (Kips)$^{-1}$		$b_x \times 10^3$ (kip-ft)$^{-1}$		$p \times 10^3$ (Kips)$^{-1}$		$b_x \times 10^3$ (kip-ft)$^{-1}$	
		ASD	LRFD	ASD	LRFD	ASD	LRFD	ASD	LRFD	ASD	LRFD	ASD	LRFD
Effective length, KL (ft), with respect to least radius of gyration, r_y, or Unbraced Length, L_b (ft), for X-X axis bending	0	0.442	0.294	0.732	0.487	0.488	0.324	0.817	0.544	0.539	0.358	0.914	0.608
	11	0.476	0.317	0.732	0.487	0.526	0.350	0.817	0.544	0.582	0.387	0.914	0.608
	12	0.483	0.321	0.732	0.487	0.534	0.355	0.817	0.544	0.590	0.393	0.914	0.608
	13	0.490	0.326	0.732	0.487	0.542	0.361	0.817	0.544	0.600	0.399	0.914	0.608
	14	0.499	0.332	0.732	0.487	0.551	0.367	0.817	0.544	0.610	0.406	0.914	0.608
	15	0.508	0.338	0.733	0.488	0.561	0.374	0.819	0.545	0.622	0.414	0.917	0.610
	16	0.517	0.344	0.736	0.490	0.572	0.381	0.823	0.548	0.634	0.422	0.922	0.613
	17	0.528	0.351	0.740	0.492	0.584	0.389	0.827	0.551	0.647	0.431	0.927	0.617
	18	0.540	0.359	0.743	0.494	0.597	0.397	0.832	0.553	0.662	0.440	0.932	0.620
	19	0.552	0.367	0.746	0.497	0.611	0.407	0.836	0.556	0.678	0.451	0.937	0.623
	20	0.566	0.376	0.750	0.499	0.626	0.417	0.840	0.559	0.695	0.462	0.942	0.627
	22	0.596	0.396	0.757	0.503	0.660	0.439	0.849	0.565	0.733	0.488	0.953	0.634
	24	0.630	0.419	0.764	0.508	0.699	0.465	0.857	0.571	0.777	0.517	0.964	0.641
	26	0.671	0.446	0.771	0.513	0.745	0.495	0.866	0.576	0.828	0.551	0.975	0.649
	28	0.717	0.477	0.778	0.518	0.797	0.530	0.876	0.583	0.887	0.590	0.987	0.656
	30	0.770	0.512	0.786	0.523	0.857	0.570	0.885	0.589	0.955	0.635	0.998	0.664
	32	0.831	0.553	0.794	0.528	0.926	0.616	0.895	0.595	1.03	0.687	1.01	0.672
	34	0.902	0.600	0.801	0.533	1.01	0.669	0.904	0.602	1.12	0.747	1.02	0.680
	36	0.983	0.654	0.809	0.539	1.10	0.731	0.914	0.608	1.23	0.817	1.04	0.689
	38	1.08	0.717	0.818	0.544	1.20	0.801	0.925	0.615	1.35	0.897	1.05	0.697
	40	1.19	0.791	0.826	0.549	1.33	0.886	0.935	0.622	1.49	0.993	1.06	0.706
	42	1.31	0.872	0.834	0.555	1.47	0.976	0.946	0.629	1.65	1.09	1.08	0.715
	44	1.44	0.957	0.843	0.561	1.61	1.07	0.957	0.637	1.81	1.20	1.09	0.725
	46	1.57	1.05	0.852	0.567	1.76	1.17	0.968	0.644	1.97	1.31	1.10	0.734
	48	1.71	1.14	0.861	0.573	1.92	1.28	0.979	0.652	2.15	1.43	1.12	0.744
	50	1.86	1.24	0.870	0.579	2.08	1.38	0.991	0.659	2.33	1.55	1.13	0.754
Other Constants and Properties													
$b_y \times 10^3$, (kip-ft)$^{-1}$		1.45		0.964		1.61		1.07		1.80		1.20	
$f_y \times 10^3$, (kips)$^{-1}$		0.442		0.294		0.488		0.324		0.539		0.358	
$f_r \times 10^3$, (kips)$^{-1}$		0.543		0.362		0.599		0.399		0.662		0.441	
r_x/r_y		1.62				1.62				1.61			
r_y, in.		4.13				4.10				4.07			

W14

Table 6-1 (continued)
Combined Flexure and Axial Force
W-Shapes

F_y = 50 ksi

Shape		W14×											
		193				176				159			
Design		$p \times 10^3$ (kips)$^{-1}$		$b_x \times 10^3$ (kip-ft)$^{-1}$		$p \times 10^3$ (kips)$^{-1}$		$b_x \times 10^3$ (kip-ft)$^{-1}$		$p \times 10^3$ (kips)$^{-1}$		$b_x \times 10^3$ (kip-ft)$^{-1}$	
		ASD	LRFD	ASD	LRFD	ASD	LRFD	ASD	LRFD	ASD	LRFD	ASD	LRFD
Effective length, KL (ft), with respect to least radius of gyration, r_y, or Unbraced Length, L_b (ft), for X-X axis bending	0	0.588	0.391	1.00	0.668	0.645	0.429	1.11	0.741	0.715	0.476	1.24	0.826
	11	0.636	0.423	1.00	0.668	0.698	0.464	1.11	0.741	0.774	0.515	1.24	0.826
	12	0.645	0.429	1.00	0.668	0.708	0.471	1.11	0.741	0.786	0.523	1.24	0.826
	13	0.655	0.436	1.00	0.668	0.720	0.479	1.11	0.741	0.799	0.532	1.24	0.826
	14	0.667	0.444	1.00	0.668	0.733	0.487	1.11	0.741	0.814	0.541	1.24	0.826
	15	0.679	0.452	1.01	0.670	0.747	0.497	1.12	0.745	0.829	0.552	1.25	0.831
	16	0.693	0.461	1.01	0.675	0.762	0.507	1.13	0.750	0.846	0.563	1.26	0.837
	17	0.708	0.471	1.02	0.679	0.778	0.518	1.13	0.755	0.865	0.576	1.27	0.843
	18	0.724	0.482	1.03	0.683	0.796	0.530	1.14	0.760	0.885	0.589	1.28	0.850
	19	0.741	0.493	1.03	0.687	0.816	0.543	1.15	0.765	0.907	0.603	1.29	0.856
	20	0.760	0.506	1.04	0.691	0.837	0.557	1.16	0.770	0.931	0.619	1.30	0.863
	22	0.802	0.534	1.05	0.700	0.884	0.588	1.17	0.781	0.983	0.654	1.32	0.876
	24	0.851	0.566	1.07	0.709	0.938	0.624	1.19	0.791	1.04	0.695	1.34	0.889
	26	0.908	0.604	1.08	0.718	1.00	0.666	1.21	0.803	1.12	0.742	1.36	0.904
	28	0.973	0.647	1.09	0.727	1.07	0.715	1.22	0.814	1.20	0.797	1.38	0.918
	30	1.05	0.697	1.11	0.737	1.16	0.771	1.24	0.826	1.29	0.860	1.40	0.933
	32	1.13	0.755	1.12	0.747	1.26	0.836	1.26	0.838	1.40	0.934	1.43	0.949
	34	1.23	0.822	1.14	0.757	1.37	0.911	1.28	0.851	1.53	1.02	1.45	0.965
	36	1.35	0.899	1.15	0.767	1.50	0.998	1.30	0.864	1.68	1.12	1.47	0.981
	38	1.49	0.989	1.17	0.778	1.65	1.10	1.32	0.877	1.85	1.23	1.50	0.998
	40	1.65	1.09	1.19	0.789	1.83	1.22	1.34	0.891	2.05	1.36	1.53	1.02
	42	1.81	1.21	1.20	0.800	2.02	1.34	1.36	0.905	2.26	1.50	1.56	1.03
	44	1.99	1.32	1.22	0.812	2.22	1.47	1.38	0.920	2.48	1.65	1.58	1.05
	46	2.18	1.45	1.24	0.824	2.42	1.61	1.41	0.935	2.71	1.81	1.61	1.07
	48	2.37	1.58	1.26	0.836	2.64	1.75	1.43	0.951	2.95	1.97	1.64	1.09
	50	2.57	1.71	1.28	0.848	2.86	1.90	1.45	0.967	3.21	2.13	1.68	1.12
Other Constants and Properties													
$b_y \times 10^3$, (kip-ft)$^{-1}$		1.98		1.32		2.19		1.45		2.44		1.62	
$t_y \times 10^3$, (kips)$^{-1}$		0.588		0.391		0.645		0.429		0.715		0.476	
$t_r \times 10^3$, (kips)$^{-1}$		0.722		0.482		0.792		0.528		0.878		0.586	
r_x/r_y		1.60				1.60				1.60			
r_y, in.		4.05				4.02				4.00			

F_y = 50 ksi

Table 6-1 (continued)
Combined Flexure and Axial Force
W-Shapes

W14

Shape		W14×											
		145				132				120			
Design		$p \times 10^3$ (kips)$^{-1}$		$b_x \times 10^3$ (kip-ft)$^{-1}$		$p \times 10^3$ (kips)$^{-1}$		$b_x \times 10^3$ (kip-ft)$^{-1}$		$p \times 10^3$ (kips)$^{-1}$		$b_x \times 10^3$ (kip-ft)$^{-1}$	
		ASD	LRFD	ASD	LRFD	ASD	LRFD	ASD	LRFD	ASD	LRFD	ASD	LRFD
Effective length, KL (ft), with respect to least radius of gyration, r_y, or Unbraced Length, L_b (ft), for X-X axis bending	0	0.782	0.520	1.37	0.912	0.861	0.573	1.52	1.01	0.946	0.630	1.68	1.12
	11	0.848	0.564	1.37	0.912	0.942	0.627	1.52	1.01	1.04	0.690	1.68	1.12
	12	0.861	0.573	1.37	0.912	0.958	0.638	1.52	1.01	1.05	0.702	1.68	1.12
	13	0.875	0.582	1.37	0.912	0.976	0.650	1.52	1.01	1.07	0.715	1.68	1.12
	14	0.891	0.593	1.37	0.912	0.996	0.663	1.53	1.02	1.10	0.730	1.69	1.13
	15	0.908	0.604	1.38	0.919	1.02	0.677	1.55	1.03	1.12	0.746	1.71	1.14
	16	0.927	0.617	1.39	0.926	1.04	0.693	1.56	1.04	1.15	0.763	1.73	1.15
	17	0.948	0.631	1.40	0.933	1.07	0.710	1.57	1.05	1.18	0.783	1.74	1.16
	18	0.970	0.645	1.41	0.941	1.10	0.729	1.59	1.06	1.21	0.803	1.76	1.17
	19	0.994	0.662	1.43	0.949	1.13	0.749	1.60	1.07	1.24	0.826	1.78	1.18
	20	1.02	0.679	1.44	0.956	1.16	0.771	1.62	1.08	1.28	0.851	1.80	1.20
	22	1.08	0.718	1.46	0.973	1.23	0.821	1.65	1.10	1.36	0.906	1.84	1.22
	24	1.15	0.763	1.49	0.989	1.32	0.880	1.68	1.12	1.46	0.971	1.88	1.25
	26	1.23	0.816	1.51	1.01	1.42	0.948	1.71	1.14	1.57	1.05	1.92	1.28
	28	1.32	0.876	1.54	1.02	1.54	1.03	1.75	1.16	1.71	1.14	1.96	1.30
	30	1.42	0.947	1.57	1.04	1.68	1.12	1.79	1.19	1.86	1.24	2.00	1.33
	32	1.54	1.03	1.60	1.06	1.85	1.23	1.82	1.21	2.05	1.36	2.05	1.37
	34	1.69	1.12	1.63	1.08	2.04	1.35	1.86	1.24	2.26	1.50	2.10	1.40
	36	1.85	1.23	1.66	1.10	2.26	1.51	1.90	1.27	2.51	1.67	2.15	1.43
	38	2.05	1.36	1.69	1.12	2.52	1.68	1.95	1.29	2.80	1.86	2.21	1.47
	40	2.27	1.51	1.72	1.15	2.79	1.86	1.99	1.32	3.10	2.07	2.27	1.51
	42	2.50	1.66	1.76	1.17	3.08	2.05	2.04	1.36	3.42	2.28	2.33	1.55
	44	2.74	1.82	1.79	1.19	3.38	2.25	2.09	1.39	3.76	2.50	2.39	1.59
	46	3.00	1.99	1.83	1.22	3.70	2.46	2.14	1.42	4.11	2.73	2.46	1.63
	48	3.26	2.17	1.87	1.24	4.02	2.68	2.19	1.46	4.47	2.97	2.53	1.68
	50	3.54	2.36	1.91	1.27	4.37	2.91	2.25	1.50	4.85	3.23	2.60	1.73
Other Constants and Properties													
$b_y \times 10^3$, (kip-ft)$^{-1}$		2.68		1.78		3.15		2.10		3.49		2.32	
$t_y \times 10^3$, (kips)$^{-1}$		0.782		0.520		0.861		0.573		0.946		0.630	
$t_r \times 10^3$, (kips)$^{-1}$		0.961		0.641		1.06		0.705		1.16		0.775	
r_x/r_y		1.59				1.67				1.67			
r_y, in.		3.98				3.76				3.74			

W14

Table 6-1 (continued)
Combined Flexure and Axial Force
W-Shapes

F_y = 50 ksi

Shape		W14×											
		109				99[f]				90[f]			
Design		$p \times 10^3$ (kips)$^{-1}$		$b_x \times 10^3$ (kip-ft)$^{-1}$		$p \times 10^3$ (kips)$^{-1}$		$b_x \times 10^3$ (kip-ft)$^{-1}$		$p \times 10^3$ (kips)$^{-1}$		$b_x \times 10^3$ (kip-ft)$^{-1}$	
		ASD	LRFD	ASD	LRFD	ASD	LRFD	ASD	LRFD	ASD	LRFD	ASD	LRFD
Effective length, KL (ft), with respect to least radius of gyration, r_y, or Unbraced Length, L_b (ft), for X-X axis bending	0	1.04	0.694	1.86	1.23	1.15	0.764	2.07	1.38	1.26	0.839	2.33	1.55
	11	1.14	0.761	1.86	1.23	1.26	0.838	2.07	1.38	1.38	0.920	2.33	1.55
	12	1.16	0.774	1.86	1.23	1.28	0.853	2.07	1.38	1.41	0.937	2.33	1.55
	13	1.19	0.789	1.86	1.23	1.31	0.869	2.07	1.38	1.44	0.955	2.33	1.55
	14	1.21	0.805	1.87	1.25	1.33	0.887	2.08	1.38	1.47	0.975	2.33	1.55
	15	1.24	0.823	1.89	1.26	1.36	0.907	2.10	1.40	1.50	0.997	2.33	1.55
	16	1.27	0.843	1.91	1.27	1.40	0.929	2.13	1.42	1.53	1.02	2.35	1.57
	17	1.30	0.864	1.93	1.29	1.43	0.953	2.15	1.43	1.57	1.05	2.38	1.59
	18	1.33	0.887	1.95	1.30	1.47	0.978	2.18	1.45	1.62	1.08	2.42	1.61
	19	1.37	0.913	1.98	1.31	1.51	1.01	2.21	1.47	1.66	1.11	2.45	1.63
	20	1.41	0.940	2.00	1.33	1.56	1.04	2.23	1.49	1.71	1.14	2.48	1.65
	22	1.51	1.00	2.04	1.36	1.66	1.11	2.29	1.52	1.83	1.22	2.55	1.70
	24	1.61	1.07	2.09	1.39	1.78	1.19	2.35	1.56	1.96	1.31	2.62	1.74
	26	1.74	1.16	2.14	1.43	1.92	1.28	2.41	1.60	2.12	1.41	2.70	1.80
	28	1.89	1.26	2.20	1.46	2.09	1.39	2.48	1.65	2.30	1.53	2.78	1.85
	30	2.06	1.37	2.25	1.50	2.28	1.52	2.55	1.69	2.52	1.68	2.87	1.91
	32	2.27	1.51	2.31	1.54	2.51	1.67	2.62	1.74	2.77	1.84	2.96	1.97
	34	2.50	1.67	2.37	1.58	2.78	1.85	2.70	1.80	3.07	2.04	3.06	2.03
	36	2.79	1.86	2.44	1.62	3.10	2.06	2.78	1.85	3.42	2.28	3.16	2.10
	38	3.11	2.07	2.51	1.67	3.45	2.30	2.87	1.91	3.81	2.54	3.27	2.18
	40	3.44	2.29	2.58	1.72	3.83	2.55	2.96	1.97	4.23	2.81	3.39	2.26
	42	3.80	2.53	2.66	1.77	4.22	2.81	3.06	2.04	4.66	3.10	3.52	2.34
	44	4.17	2.77	2.74	1.82	4.63	3.08	3.17	2.11	5.11	3.40	3.72	2.48
	46	4.55	3.03	2.82	1.88	5.06	3.37	3.31	2.20	5.59	3.72	3.94	2.62
	48	4.96	3.30	2.92	1.94	5.51	3.67	3.48	2.32	6.08	4.05	4.15	2.76
	50	5.38	3.58	3.05	2.03	5.98	3.98	3.66	2.43	6.60	4.39	4.36	2.90
Other Constants and Properties													
$b_y \times 10^3$, (kip-ft)$^{-1}$		3.84		2.56		4.29		2.85		4.90		3.26	
$t_y \times 10^3$, (kips)$^{-1}$		1.04		0.694		1.15		0.764		1.26		0.839	
$t_r \times 10^3$, (kips)$^{-1}$		1.28		0.855		1.41		0.940		1.55		1.03	
r_x/r_y		1.67				1.66				1.66			
r_y, in.		3.73				3.71				3.70			

[f] Shape does not meet compact limit for flexure with F_y = 50 ksi.

F_y = 50 ksi

Table 6-1 (continued)
Combined Flexure and Axial Force
W-Shapes

Shape		W14×											
		82				74				68			
Design		$p \times 10^3$ (kips)$^{-1}$		$b_x \times 10^3$ (kip-ft)$^{-1}$		$p \times 10^3$ (kips)$^{-1}$		$b_x \times 10^3$ (kip-ft)$^{-1}$		$p \times 10^3$ (kips)$^{-1}$		$b_x \times 10^3$ (kip-ft)$^{-1}$	
		ASD	LRFD	ASD	LRFD	ASD	LRFD	ASD	LRFD	ASD	LRFD	ASD	LRFD
Effective length, KL (ft), with respect to least radius of gyration, r_y, or Unbraced Length, L_b (ft), for X-X axis bending	0	1.39	0.926	2.56	1.71	1.53	1.02	2.83	1.88	1.67	1.11	3.10	2.06
	6	1.48	0.985	2.56	1.71	1.63	1.08	2.83	1.88	1.78	1.18	3.10	2.06
	7	1.51	1.01	2.56	1.71	1.67	1.11	2.83	1.88	1.82	1.21	3.10	2.06
	8	1.55	1.03	2.56	1.71	1.71	1.14	2.83	1.88	1.87	1.24	3.10	2.06
	9	1.60	1.06	2.57	1.71	1.76	1.17	2.84	1.89	1.92	1.28	3.12	2.07
	10	1.65	1.10	2.61	1.74	1.82	1.21	2.89	1.92	1.99	1.32	3.17	2.11
	11	1.71	1.14	2.66	1.77	1.88	1.25	2.94	1.96	2.06	1.37	3.23	2.15
	12	1.78	1.18	2.70	1.80	1.96	1.30	2.99	1.99	2.15	1.43	3.30	2.19
	13	1.86	1.24	2.74	1.83	2.05	1.36	3.05	2.03	2.24	1.49	3.36	2.24
	14	1.95	1.30	2.79	1.86	2.14	1.43	3.10	2.06	2.35	1.56	3.43	2.28
	15	2.05	1.36	2.84	1.89	2.25	1.50	3.16	2.10	2.47	1.64	3.50	2.33
	16	2.16	1.44	2.89	1.92	2.37	1.58	3.22	2.14	2.61	1.73	3.57	2.38
	17	2.28	1.52	2.94	1.96	2.51	1.67	3.29	2.19	2.76	1.84	3.65	2.43
	18	2.42	1.61	2.99	1.99	2.67	1.78	3.35	2.23	2.93	1.95	3.73	2.48
	19	2.58	1.72	3.05	2.03	2.84	1.89	3.42	2.28	3.13	2.08	3.81	2.53
	20	2.76	1.84	3.11	2.07	3.04	2.02	3.49	2.32	3.35	2.23	3.90	2.59
	22	3.19	2.12	3.23	2.15	3.51	2.33	3.65	2.43	3.88	2.58	4.08	2.72
	24	3.74	2.49	3.36	2.24	4.12	2.74	3.81	2.54	4.56	3.03	4.29	2.85
	26	4.39	2.92	3.51	2.33	4.83	3.21	3.99	2.66	5.35	3.56	4.51	3.00
	28	5.09	3.39	3.66	2.44	5.60	3.73	4.20	2.79	6.21	4.13	4.77	3.17
	30	5.84	3.89	3.83	2.55	6.43	4.26	4.42	2.94	7.12	4.74	5.10	3.39
	32	6.65	4.42	4.02	2.67	7.32	4.87	4.72	3.14	8.11	5.39	5.53	3.68
	34	7.50	4.99	4.26	2.84	8.26	5.50	5.07	3.38	9.15	6.09	5.96	3.96
	36	8.41	5.60	4.56	3.03	9.26	6.16	5.43	3.61	10.3	6.83	6.38	4.25
	38	9.37	6.24	4.85	3.22	10.3	6.86	5.78	3.85	11.4	7.60	6.81	4.53
	40	10.4	6.91	5.14	3.42	11.4	7.61	6.14	4.08	12.7	8.43	7.23	4.81
Other Constants and Properties													
$b_y \times 10^3$, (kip-ft)$^{-1}$		7.95		5.29		8.80		5.85		9.65		6.42	
$t_y \times 10^3$, (kips)$^{-1}$		1.39		0.926		1.53		1.02		1.67		1.11	
$t_r \times 10^3$, (kips)$^{-1}$		1.71		1.14		1.88		1.25		2.05		1.37	
r_x/r_y		2.44				2.44				2.44			
r_y, in.		2.48				2.48				2.46			

W14

Table 6-1 (continued)
Combined Flexure and Axial Force
W-Shapes

F_y = 50 ksi

Shape		W14×											
		61				53				48			
Design		$p \times 10^3$ (kips)$^{-1}$		$b_x \times 10^3$ (kip-ft)$^{-1}$		$p \times 10^3$ (kips)$^{-1}$		$b_x \times 10^3$ (kip-ft)$^{-1}$		$p \times 10^3$ (kips)$^{-1}$		$b_x \times 10^3$ (kip-ft)$^{-1}$	
		ASD	LRFD	ASD	LRFD	ASD	LRFD	ASD	LRFD	ASD	LRFD	ASD	LRFD
Effective length, KL (ft), with respect to least radius of gyration, r_y, or Unbraced Length, L_b (ft), for X-X axis bending	0	1.87	1.24	3.49	2.32	2.14	1.42	4.09	2.72	2.37	1.58	4.54	3.02
	6	1.99	1.32	3.49	2.32	2.37	1.58	4.09	2.72	2.63	1.75	4.54	3.02
	7	2.03	1.35	3.49	2.32	2.46	1.64	4.11	2.74	2.73	1.82	4.57	3.04
	8	2.09	1.39	3.49	2.32	2.57	1.71	4.21	2.80	2.85	1.90	4.70	3.13
	9	2.15	1.43	3.52	2.34	2.70	1.80	4.32	2.88	2.99	1.99	4.83	3.21
	10	2.22	1.48	3.59	2.39	2.85	1.90	4.44	2.95	3.16	2.10	4.96	3.30
	11	2.31	1.54	3.66	2.44	3.02	2.01	4.56	3.03	3.36	2.23	5.11	3.40
	12	2.40	1.60	3.74	2.49	3.23	2.15	4.68	3.11	3.59	2.39	5.26	3.50
	13	2.51	1.67	3.82	2.54	3.47	2.31	4.81	3.20	3.86	2.57	5.43	3.61
	14	2.63	1.75	3.90	2.59	3.75	2.49	4.96	3.30	4.17	2.77	5.60	3.73
	15	2.77	1.84	3.99	2.65	4.07	2.71	5.11	3.40	4.53	3.02	5.79	3.85
	16	2.92	1.95	4.08	2.71	4.45	2.96	5.26	3.50	4.96	3.30	5.98	3.98
	17	3.10	2.06	4.17	2.78	4.89	3.25	5.43	3.62	5.45	3.63	6.20	4.12
	18	3.29	2.19	4.27	2.84	5.40	3.59	5.61	3.74	6.03	4.01	6.42	4.27
	19	3.51	2.34	4.38	2.91	6.01	4.00	5.81	3.86	6.72	4.47	6.67	4.44
	20	3.76	2.50	4.49	2.98	6.66	4.43	6.01	4.00	7.45	4.96	6.94	4.61
	22	4.36	2.90	4.72	3.14	8.06	5.36	6.47	4.31	9.01	6.00	7.69	5.12
	24	5.14	3.42	4.99	3.32	9.60	6.38	7.22	4.80	10.7	7.14	8.64	5.75
	26	6.03	4.01	5.28	3.51	11.3	7.49	7.99	5.32	12.6	8.38	9.59	6.38
	28	6.99	4.65	5.66	3.77	13.1	8.69	8.76	5.83	14.6	9.72	10.5	7.01
	30	8.02	5.34	6.20	4.13	15.0	9.98	9.53	6.34	16.8	11.2	11.5	7.65
	32	9.13	6.07	6.74	4.48	17.1	11.3	10.3	6.85				
	34	10.3	6.86	7.27	4.84								
	36	11.6	7.69	7.81	5.20								
	38	12.9	8.57	8.34	5.55								
	40	14.3	9.49	8.87	5.90								
Other Constants and Properties													
$b_y \times 10^3$, (kip-ft)$^{-1}$		10.9		7.23		16.2		10.8		18.2		12.1	
$t_y \times 10^3$, (kips)$^{-1}$		1.87		1.24		2.14		1.42		2.37		1.58	
$t_r \times 10^3$, (kips)$^{-1}$		2.29		1.53		2.63		1.75		2.91		1.94	
r_x/r_y		2.44				3.07				3.06			
r_y, in.		2.45				1.92				1.91			

Note: Heavy line indicates KL/r_y equal to or greater than 200.

Table 6-1 (continued)
Combined Flexure and Axial Force
W-Shapes[a]

F_y = 50 ksi

W14

Shape		W14×											
		43[c]				38[c]				34[c]			
Design		$p \times 10^3$ (kips)$^{-1}$		$b_x \times 10^3$ (kip-ft)$^{-1}$		$p \times 10^3$ (kips)$^{-1}$		$b_x \times 10^3$ (kip-ft)$^{-1}$		$p \times 10^3$ (kips)$^{-1}$		$b_x \times 10^3$ (kip-ft)$^{-1}$	
		ASD	LRFD	ASD	LRFD	ASD	LRFD	ASD	LRFD	ASD	LRFD	ASD	LRFD
Effective length, KL (ft), with respect to least radius of gyration, r_y, or Unbraced Length, L_b (ft), for X-X axis bending	0	2.68	1.78	5.12	3.41	3.06	2.04	5.79	3.85	3.50	2.33	6.53	4.34
	6	2.95	1.96	5.12	3.41	3.51	2.34	5.90	3.93	4.02	2.67	6.67	4.44
	7	3.06	2.04	5.17	3.44	3.70	2.46	6.12	4.07	4.23	2.81	6.94	4.61
	8	3.20	2.13	5.31	3.54	3.95	2.63	6.36	4.23	4.49	2.99	7.22	4.80
	9	3.37	2.24	5.47	3.64	4.25	2.83	6.61	4.40	4.81	3.20	7.53	5.01
	10	3.56	2.37	5.64	3.75	4.62	3.08	6.89	4.58	5.24	3.48	7.87	5.23
	11	3.79	2.52	5.82	3.87	5.07	3.37	7.19	4.78	5.76	3.83	8.24	5.48
	12	4.05	2.70	6.01	4.00	5.61	3.73	7.52	5.00	6.38	4.25	8.64	5.75
	13	4.36	2.90	6.21	4.13	6.25	4.16	7.88	5.24	7.14	4.75	9.09	6.05
	14	4.72	3.14	6.42	4.27	7.04	4.68	8.27	5.50	8.07	5.37	9.58	6.37
	15	5.15	3.42	6.66	4.43	8.01	5.33	8.71	5.80	9.21	6.13	10.1	6.74
	16	5.64	3.75	6.90	4.59	9.11	6.06	9.20	6.12	10.5	6.97	11.0	7.29
	17	6.21	4.13	7.17	4.77	10.3	6.85	9.99	6.65	11.8	7.87	12.0	8.01
	18	6.90	4.59	7.46	4.97	11.5	7.68	10.9	7.23	13.3	8.82	13.1	8.73
	19	7.68	5.11	7.78	5.17	12.9	8.55	11.8	7.82	14.8	9.83	14.2	9.47
	20	8.51	5.66	8.12	5.40	14.2	9.48	12.6	8.41	16.4	10.9	15.3	10.2
	21	9.39	6.25	8.71	5.80	15.7	10.4	13.5	9.00	18.0	12.0	16.5	11.0
	22	10.3	6.85	9.31	6.19	17.2	11.5	14.4	9.60	19.8	13.2	17.6	11.7
	23	11.3	7.49	9.90	6.59	18.8	12.5	15.3	10.2	21.6	14.4	18.7	12.4
	24	12.3	8.16	10.5	6.99	20.5	13.6	16.2	10.8	23.6	15.7	19.8	13.2
	25	13.3	8.85	11.1	7.39	22.3	14.8	17.1	11.4	25.6	17.0	21.0	13.9
	26	14.4	9.57	11.7	7.78								
	27	15.5	10.3	12.3	8.18								
	28	16.7	11.1	12.9	8.58								
	29	17.9	11.9	13.5	8.98								
	30	19.2	12.7	14.1	9.37								
Other Constants and Properties													
$b_y \times 10^3$, (kip-ft)$^{-1}$		20.6		13.7		29.4		19.6		33.6		22.4	
$t_y \times 10^3$, (kips)$^{-1}$		2.65		1.76		2.98		1.98		3.34		2.22	
$t_r \times 10^3$, (kips)$^{-1}$		3.26		2.17		3.66		2.44		4.10		2.74	
r_x/r_y		3.08				3.79				3.81			
r_y, in.		1.89				1.55				1.53			

[c] Shape is slender for compression with F_y = 50 ksi.

Note: Heavy line indicates KL/r_y equal to or greater than 200.

W14

Table 6-1 (continued)
Combined Flexure and Axial Force
W-Shapes

F_y = 50 ksi

Shape		W14×											
		30[c]				26[c]				22[c]			
Design		$p \times 10^3$ (kips)$^{-1}$		$b_x \times 10^3$ (kip-ft)$^{-1}$		$p \times 10^3$ (kips)$^{-1}$		$b_x \times 10^3$ (kip-ft)$^{-1}$		$p \times 10^3$ (kips)$^{-1}$		$b_x \times 10^3$ (kip-ft)$^{-1}$	
		ASD	LRFD	ASD	LRFD	ASD	LRFD	ASD	LRFD	ASD	LRFD	ASD	LRFD
Effective length, KL (ft), with respect to least radius of gyration, r_y, or unbraced Length, L_b (ft), for X-X axis bending	0	4.02	2.68	7.53	5.01	4.73	3.15	8.86	5.90	5.82	3.87	10.7	7.14
	6	4.63	3.08	7.76	5.16	6.18	4.11	10.0	6.67	7.65	5.09	12.4	8.24
	7	4.89	3.25	8.09	5.38	6.85	4.56	10.7	7.10	8.52	5.67	13.3	8.83
	8	5.20	3.46	8.44	5.62	7.75	5.16	11.4	7.59	9.70	6.45	14.3	9.51
	9	5.59	3.72	8.83	5.88	9.02	6.00	12.3	8.15	11.3	7.54	15.5	10.3
	10	6.07	4.04	9.26	6.16	10.7	7.13	13.2	8.80	13.6	9.08	16.9	11.2
	11	6.70	4.46	9.74	6.48	12.9	8.60	14.4	9.56	16.5	11.0	19.2	12.8
	12	7.47	4.97	10.3	6.83	15.4	10.2	16.5	11.0	19.7	13.1	22.3	14.8
	13	8.41	5.60	10.8	7.21	18.1	12.0	18.7	12.4	23.1	15.3	25.4	16.9
	14	9.56	6.36	11.5	7.65	20.9	13.9	20.9	13.9	26.8	17.8	28.5	19.0
	15	11.0	7.30	12.3	8.20	24.0	16.0	23.2	15.4	30.7	20.4	31.8	21.2
	16	12.5	8.31	13.7	9.12	27.3	18.2	25.5	17.0	34.9	23.2	35.1	23.3
	17	14.1	9.38	15.1	10.0	30.9	20.5	27.8	18.5	39.4	26.2	38.4	25.6
	18	15.8	10.5	16.5	11.0	34.6	23.0	30.1	20.0				
	19	17.6	11.7	18.0	12.0								
	20	19.5	13.0	19.4	12.9								
	21	21.5	14.3	20.9	13.9								
	22	23.6	15.7	22.4	14.9								
	23	25.8	17.2	23.9	15.9								
	24	28.1	18.7	25.4	16.9								
Other Constants and Properties													
$b_y \times 10^3$, (kip-ft)$^{-1}$		39.6		26.4		64.3		42.8		81.2		54.0	
$t_y \times 10^3$, (kips)$^{-1}$		3.77		2.51		4.34		2.89		5.15		3.42	
$t_r \times 10^3$, (kips)$^{-1}$		4.64		3.09		5.33		3.56		6.32		4.21	
r_x/r_y		3.85				5.23				5.33			
r_y, in.		1.49				1.08				1.04			

[c] Shape is slender for compression with F_y = 50 ksi.

Note: Heavy line indicates KL/r_y equal to or greater than 200.

F_y = 50 ksi

Table 6-1 (continued)
Combined Flexure and Axial Force
W-Shapes

W12

Shape		W12×											
		336[h]				305[h]				279[h]			
Design		$p \times 10^3$ (kips)$^{-1}$		$b_x \times 10^3$ (kip-ft)$^{-1}$		$p \times 10^3$ (kips)$^{-1}$		$b_x \times 10^3$ (kip-ft)$^{-1}$		$p \times 10^3$ (kips)$^{-1}$		$b_x \times 10^3$ (kip-ft)$^{-1}$	
		ASD	LRFD	ASD	LRFD	ASD	LRFD	ASD	LRFD	ASD	LRFD	ASD	LRFD
Effective length, KL (ft), with respect to least radius of gyration, r_y, or Unbraced Length, L_b (ft), for X-X axis bending	0	0.338	0.225	0.591	0.393	0.373	0.248	0.663	0.441	0.408	0.271	0.741	0.493
	6	0.349	0.232	0.591	0.393	0.385	0.256	0.663	0.441	0.422	0.280	0.741	0.493
	7	0.352	0.235	0.591	0.393	0.390	0.259	0.663	0.441	0.427	0.284	0.741	0.493
	8	0.357	0.238	0.591	0.393	0.395	0.263	0.663	0.441	0.433	0.288	0.741	0.493
	9	0.363	0.241	0.591	0.393	0.401	0.267	0.663	0.441	0.439	0.292	0.741	0.493
	10	0.369	0.245	0.591	0.393	0.408	0.272	0.663	0.441	0.447	0.298	0.741	0.493
	11	0.375	0.250	0.591	0.393	0.416	0.277	0.663	0.441	0.456	0.303	0.741	0.493
	12	0.383	0.255	0.591	0.393	0.425	0.283	0.663	0.441	0.466	0.310	0.741	0.493
	13	0.391	0.260	0.592	0.394	0.435	0.289	0.666	0.443	0.477	0.317	0.744	0.495
	14	0.401	0.267	0.594	0.395	0.445	0.296	0.668	0.444	0.489	0.325	0.746	0.497
	15	0.411	0.274	0.596	0.397	0.457	0.304	0.670	0.446	0.502	0.334	0.749	0.499
	16	0.422	0.281	0.598	0.398	0.470	0.313	0.673	0.448	0.516	0.344	0.752	0.500
	17	0.435	0.289	0.600	0.399	0.484	0.322	0.675	0.449	0.532	0.354	0.755	0.502
	18	0.448	0.298	0.602	0.400	0.500	0.332	0.677	0.451	0.550	0.366	0.758	0.504
	19	0.463	0.308	0.604	0.402	0.516	0.344	0.680	0.452	0.569	0.378	0.761	0.506
	20	0.479	0.319	0.606	0.403	0.535	0.356	0.682	0.454	0.590	0.392	0.764	0.508
	22	0.516	0.343	0.610	0.406	0.577	0.384	0.687	0.457	0.637	0.424	0.770	0.512
	24	0.559	0.372	0.614	0.408	0.627	0.417	0.692	0.461	0.693	0.461	0.776	0.516
	26	0.610	0.406	0.618	0.411	0.686	0.456	0.697	0.464	0.760	0.506	0.782	0.520
	28	0.670	0.446	0.622	0.414	0.756	0.503	0.702	0.467	0.840	0.559	0.788	0.524
	30	0.742	0.494	0.626	0.417	0.839	0.558	0.708	0.471	0.935	0.622	0.795	0.529
	32	0.827	0.550	0.630	0.419	0.938	0.624	0.713	0.474	1.05	0.698	0.801	0.533
	34	0.930	0.619	0.635	0.422	1.06	0.704	0.718	0.478	1.18	0.788	0.808	0.537
	36	1.04	0.694	0.639	0.425	1.19	0.789	0.724	0.481	1.33	0.883	0.814	0.542
	38	1.16	0.773	0.644	0.428	1.32	0.879	0.729	0.485	1.48	0.984	0.821	0.546
	40	1.29	0.856	0.648	0.431	1.46	0.974	0.735	0.489	1.64	1.09	0.828	0.551
Other Constants and Properties													
$b_y \times 10^3$, (kip-ft)$^{-1}$		1.30		0.865		1.46		0.971		1.62		1.08	
$t_y \times 10^3$, (kips)$^{-1}$		0.338		0.225		0.373		0.248		0.408		0.271	
$t_r \times 10^3$, (kips)$^{-1}$		0.415		0.277		0.458		0.306		0.501		0.334	
r_x/r_y		1.85				1.84				1.82			
r_y, in.		3.47				3.42				3.38			

[h] Flange thickness greater than 2 in. Special requirements may apply per AISC *Specification* Section A3.1c.

W12

Table 6-1 (continued)
Combined Flexure and Axial Force
W-Shapes

F_y = 50 ksi

Shape		W12×											
		252[h]				230[h]				210			
Design		$p \times 10^3$ (kips)$^{-1}$		$b_x \times 10^3$ (kip-ft)$^{-1}$		$p \times 10^3$ (kips)$^{-1}$		$b_x \times 10^3$ (kip-ft)$^{-1}$		$p \times 10^3$ (kips)$^{-1}$		$b_x \times 10^3$ (kip-ft)$^{-1}$	
		ASD	LRFD	ASD	LRFD	ASD	LRFD	ASD	LRFD	ASD	LRFD	ASD	LRFD
Effective length, KL (ft), with respect to least radius of gyration, r_y, or Unbraced Length, L_b (ft), for X-X axis bending	0	0.451	0.300	0.832	0.554	0.493	0.328	0.923	0.614	0.540	0.360	1.02	0.681
	6	0.466	0.310	0.832	0.554	0.511	0.340	0.923	0.614	0.560	0.372	1.02	0.681
	7	0.472	0.314	0.832	0.554	0.517	0.344	0.923	0.614	0.567	0.377	1.02	0.681
	8	0.479	0.319	0.832	0.554	0.525	0.349	0.923	0.614	0.575	0.383	1.02	0.681
	9	0.487	0.324	0.832	0.554	0.533	0.355	0.923	0.614	0.585	0.389	1.02	0.681
	10	0.495	0.330	0.832	0.554	0.543	0.361	0.923	0.614	0.596	0.397	1.02	0.681
	11	0.505	0.336	0.832	0.554	0.554	0.369	0.923	0.614	0.608	0.405	1.02	0.681
	12	0.516	0.344	0.833	0.554	0.567	0.377	0.924	0.615	0.622	0.414	1.03	0.683
	13	0.529	0.352	0.837	0.557	0.580	0.386	0.928	0.618	0.638	0.424	1.03	0.686
	14	0.542	0.361	0.840	0.559	0.596	0.396	0.933	0.621	0.655	0.436	1.04	0.689
	15	0.557	0.371	0.844	0.561	0.612	0.407	0.937	0.623	0.674	0.448	1.04	0.693
	16	0.574	0.382	0.847	0.564	0.631	0.420	0.941	0.626	0.694	0.462	1.05	0.696
	17	0.592	0.394	0.851	0.566	0.651	0.433	0.946	0.629	0.717	0.477	1.05	0.700
	18	0.612	0.407	0.854	0.568	0.674	0.448	0.950	0.632	0.742	0.494	1.06	0.703
	19	0.634	0.422	0.858	0.571	0.698	0.464	0.954	0.635	0.769	0.512	1.06	0.707
	20	0.657	0.437	0.862	0.573	0.725	0.482	0.959	0.638	0.799	0.532	1.07	0.710
	22	0.712	0.474	0.869	0.578	0.786	0.523	0.968	0.644	0.868	0.577	1.08	0.718
	24	0.776	0.516	0.877	0.583	0.858	0.571	0.977	0.650	0.950	0.632	1.09	0.725
	26	0.853	0.568	0.884	0.588	0.945	0.629	0.986	0.656	1.05	0.697	1.10	0.733
	28	0.945	0.629	0.892	0.594	1.05	0.697	0.996	0.663	1.16	0.775	1.11	0.741
	30	1.05	0.701	0.900	0.599	1.17	0.780	1.01	0.669	1.30	0.868	1.13	0.749
	32	1.19	0.790	0.908	0.604	1.32	0.880	1.02	0.676	1.48	0.982	1.14	0.757
	34	1.34	0.891	0.916	0.610	1.49	0.993	1.03	0.682	1.67	1.11	1.15	0.765
	36	1.50	0.999	0.925	0.615	1.67	1.11	1.04	0.689	1.87	1.24	1.16	0.774
	38	1.67	1.11	0.933	0.621	1.87	1.24	1.05	0.696	2.08	1.38	1.18	0.782
	40	1.85	1.23	0.942	0.627	2.07	1.37	1.06	0.704	2.31	1.53	1.19	0.791
Other Constants and Properties													
$b_y \times 10^3$, (kip-ft)$^{-1}$		1.82		1.21		2.01		1.34		2.24		1.49	
$t_y \times 10^3$, (kips)$^{-1}$		0.451		0.300		0.493		0.328		0.540		0.360	
$t_r \times 10^3$, (kips)$^{-1}$		0.554		0.369		0.606		0.404		0.664		0.443	
r_x/r_y		1.81				1.80				1.80			
r_y, in.		3.34				3.31				3.28			

[h] Flange thickness greater than 2 in. Special requirements may apply per AISC *Specification* Section A3.1c.

F_y = 50 ksi

Table 6-1 (continued)
Combined Flexure and Axial Force
W-Shapes

W12

Shape		W12×											
		190				170				152			
Design		$p \times 10^3$ (kips)$^{-1}$		$b_x \times 10^3$ (kip-ft)$^{-1}$		$p \times 10^3$ (kips)$^{-1}$		$b_x \times 10^3$ (kip-ft)$^{-1}$		$p \times 10^3$ (kips)$^{-1}$		$b_x \times 10^3$ (kip-ft)$^{-1}$	
		ASD	LRFD	ASD	LRFD	ASD	LRFD	ASD	LRFD	ASD	LRFD	ASD	LRFD
Effective length, KL (ft), with respect to least radius of gyration, r_y, or Unbraced Length, L_b (ft), for X-X axis bending	0	0.596	0.397	1.15	0.762	0.668	0.444	1.30	0.862	0.747	0.497	1.47	0.975
	6	0.618	0.411	1.15	0.762	0.693	0.461	1.30	0.862	0.776	0.516	1.47	0.975
	7	0.626	0.417	1.15	0.762	0.702	0.467	1.30	0.862	0.786	0.523	1.47	0.975
	8	0.636	0.423	1.15	0.762	0.713	0.474	1.30	0.862	0.798	0.531	1.47	0.975
	9	0.647	0.430	1.15	0.762	0.725	0.483	1.30	0.862	0.813	0.541	1.47	0.975
	10	0.659	0.438	1.15	0.762	0.739	0.492	1.30	0.862	0.829	0.551	1.47	0.975
	11	0.673	0.448	1.15	0.762	0.755	0.503	1.30	0.862	0.847	0.563	1.47	0.975
	12	0.688	0.458	1.15	0.764	0.773	0.514	1.30	0.865	0.867	0.577	1.47	0.980
	13	0.706	0.470	1.16	0.768	0.793	0.528	1.31	0.870	0.890	0.592	1.48	0.987
	14	0.725	0.482	1.16	0.773	0.815	0.542	1.32	0.876	0.915	0.609	1.49	0.994
	15	0.746	0.497	1.17	0.777	0.839	0.559	1.32	0.881	0.943	0.627	1.50	1.00
	16	0.770	0.512	1.17	0.781	0.866	0.576	1.33	0.887	0.974	0.648	1.51	1.01
	17	0.796	0.529	1.18	0.786	0.896	0.596	1.34	0.892	1.01	0.670	1.52	1.01
	18	0.824	0.548	1.19	0.790	0.928	0.618	1.35	0.898	1.04	0.695	1.54	1.02
	19	0.855	0.569	1.19	0.794	0.964	0.641	1.36	0.903	1.09	0.722	1.55	1.03
	20	0.889	0.591	1.20	0.799	1.00	0.667	1.37	0.909	1.13	0.752	1.56	1.04
	22	0.966	0.643	1.21	0.808	1.09	0.727	1.38	0.921	1.23	0.820	1.58	1.05
	24	1.06	0.705	1.23	0.817	1.20	0.798	1.40	0.932	1.36	0.902	1.60	1.07
	26	1.17	0.778	1.24	0.827	1.33	0.883	1.42	0.945	1.50	1.00	1.63	1.08
	28	1.30	0.867	1.26	0.837	1.48	0.985	1.44	0.957	1.68	1.12	1.65	1.10
	30	1.46	0.973	1.27	0.847	1.67	1.11	1.46	0.970	1.90	1.26	1.68	1.12
	32	1.66	1.10	1.29	0.857	1.89	1.26	1.48	0.983	2.16	1.43	1.70	1.13
	34	1.87	1.25	1.30	0.867	2.14	1.42	1.50	0.997	2.43	1.62	1.73	1.15
	36	2.10	1.40	1.32	0.878	2.39	1.59	1.52	1.01	2.73	1.82	1.76	1.17
	38	2.34	1.56	1.34	0.889	2.67	1.78	1.54	1.03	3.04	2.02	1.79	1.19
	40	2.59	1.72	1.35	0.900	2.96	1.97	1.56	1.04	3.37	2.24	1.82	1.21
Other Constants and Properties													
$b_y \times 10^3$, (kip-ft)$^{-1}$		2.49		1.66		2.83		1.88		3.21		2.14	
$t_y \times 10^3$, (kips)$^{-1}$		0.596		0.397		0.668		0.444		0.747		0.497	
$t_r \times 10^3$, (kips)$^{-1}$		0.733		0.488		0.821		0.547		0.918		0.612	
r_x/r_y		1.79				1.78				1.77			
r_y, in.		3.25				3.22				3.19			

W12

Table 6-1 (continued)
Combined Flexure and Axial Force
W-Shapes

F_y = 50 ksi

Shape		W12×											
		136				120				106			
Design		$p \times 10^3$ (kips)$^{-1}$		$b_x \times 10^3$ (kip-ft)$^{-1}$		$p \times 10^3$ (kips)$^{-1}$		$b_x \times 10^3$ (kip-ft)$^{-1}$		$p \times 10^3$ (kips)$^{-1}$		$b_x \times 10^3$ (kip-ft)$^{-1}$	
		ASD	LRFD	ASD	LRFD	ASD	LRFD	ASD	LRFD	ASD	LRFD	ASD	LRFD
Effective length, KL (ft), with respect to least radius of gyration, r_y, or Unbraced Length, L_b (ft), for X-X axis bending	0	0.837	0.557	1.66	1.11	0.949	0.631	1.92	1.27	1.07	0.712	2.17	1.45
	6	0.869	0.578	1.66	1.11	0.986	0.656	1.92	1.27	1.11	0.741	2.17	1.45
	7	0.881	0.586	1.66	1.11	1.00	0.665	1.92	1.27	1.13	0.751	2.17	1.45
	8	0.896	0.596	1.66	1.11	1.02	0.676	1.92	1.27	1.15	0.764	2.17	1.45
	9	0.912	0.607	1.66	1.11	1.04	0.689	1.92	1.27	1.17	0.778	2.17	1.45
	10	0.930	0.619	1.66	1.11	1.06	0.703	1.92	1.27	1.19	0.794	2.17	1.45
	11	0.951	0.633	1.66	1.11	1.08	0.719	1.92	1.27	1.22	0.813	2.17	1.45
	12	0.974	0.648	1.68	1.11	1.11	0.737	1.93	1.28	1.25	0.833	2.19	1.46
	13	1.00	0.666	1.69	1.12	1.14	0.757	1.95	1.30	1.29	0.856	2.22	1.47
	14	1.03	0.685	1.70	1.13	1.17	0.779	1.96	1.31	1.33	0.882	2.24	1.49
	15	1.06	0.706	1.71	1.14	1.21	0.804	1.98	1.32	1.37	0.910	2.26	1.50
	16	1.10	0.730	1.73	1.15	1.25	0.831	2.00	1.33	1.41	0.941	2.28	1.52
	17	1.14	0.755	1.74	1.16	1.29	0.861	2.02	1.34	1.47	0.976	2.31	1.53
	18	1.18	0.784	1.76	1.17	1.34	0.894	2.04	1.35	1.52	1.01	2.33	1.55
	19	1.22	0.815	1.77	1.18	1.40	0.931	2.05	1.37	1.59	1.06	2.35	1.57
	20	1.28	0.849	1.78	1.19	1.46	0.970	2.07	1.38	1.65	1.10	2.38	1.58
	22	1.39	0.928	1.81	1.21	1.60	1.06	2.11	1.41	1.81	1.21	2.43	1.62
	24	1.54	1.02	1.84	1.23	1.76	1.17	2.15	1.43	2.00	1.33	2.48	1.65
	26	1.71	1.14	1.87	1.25	1.96	1.31	2.19	1.46	2.23	1.49	2.54	1.69
	28	1.91	1.27	1.91	1.27	2.20	1.47	2.24	1.49	2.51	1.67	2.60	1.73
	30	2.16	1.44	1.94	1.29	2.50	1.66	2.28	1.52	2.86	1.90	2.66	1.77
	32	2.46	1.64	1.97	1.31	2.84	1.89	2.33	1.55	3.25	2.16	2.72	1.81
	34	2.78	1.85	2.01	1.34	3.21	2.14	2.38	1.58	3.67	2.44	2.79	1.86
	36	3.12	2.07	2.05	1.36	3.60	2.40	2.43	1.62	4.11	2.74	2.86	1.90
	38	3.47	2.31	2.09	1.39	4.01	2.67	2.48	1.65	4.58	3.05	2.93	1.95
	40	3.85	2.56	2.13	1.41	4.44	2.96	2.54	1.69	5.08	3.38	3.01	2.00
Other Constants and Properties													
$b_y \times 10^3$, (kip-ft)$^{-1}$		3.64		2.42		4.17		2.78		4.74		3.16	
$t_y \times 10^3$, (kips)$^{-1}$		0.837		0.557		0.949		0.631		1.07		0.712	
$t_r \times 10^3$, (kips)$^{-1}$		1.03		0.685		1.17		0.777		1.31		0.877	
r_x/r_y		1.77				1.76				1.76			
r_y, in.		3.16				3.13				3.11			

Table 6-1 (continued)
Combined Flexure and Axial Force
W-Shapes

F_y = 50 ksi

Shape		W12×											
		96				87				79			
Design		$p \times 10^3$ (kips)$^{-1}$		$b_x \times 10^3$ (kip-ft)$^{-1}$		$p \times 10^3$ (kips)$^{-1}$		$b_x \times 10^3$ (kip-ft)$^{-1}$		$p \times 10^3$ (kips)$^{-1}$		$b_x \times 10^3$ (kip-ft)$^{-1}$	
		ASD	LRFD	ASD	LRFD	ASD	LRFD	ASD	LRFD	ASD	LRFD	ASD	LRFD
Effective length, KL (ft), with respect to least radius of gyration, r_y, or Unbraced Length, L_b (ft), for X-X axis bending	0	1.18	0.788	2.42	1.61	1.30	0.868	2.70	1.80	1.44	0.958	2.99	1.99
	6	1.23	0.820	2.42	1.61	1.36	0.904	2.70	1.80	1.50	0.998	2.99	1.99
	7	1.25	0.832	2.42	1.61	1.38	0.917	2.70	1.80	1.52	1.01	2.99	1.99
	8	1.27	0.846	2.42	1.61	1.40	0.932	2.70	1.80	1.55	1.03	2.99	1.99
	9	1.30	0.862	2.42	1.61	1.43	0.950	2.70	1.80	1.58	1.05	2.99	1.99
	10	1.32	0.880	2.42	1.61	1.46	0.971	2.70	1.80	1.61	1.07	2.99	1.99
	11	1.35	0.901	2.43	1.61	1.49	0.994	2.70	1.80	1.65	1.10	3.00	2.00
	12	1.39	0.924	2.45	1.63	1.53	1.02	2.74	1.82	1.69	1.13	3.04	2.02
	13	1.43	0.949	2.48	1.65	1.58	1.05	2.77	1.84	1.74	1.16	3.08	2.05
	14	1.47	0.978	2.50	1.67	1.62	1.08	2.80	1.86	1.80	1.20	3.12	2.08
	15	1.52	1.01	2.53	1.68	1.68	1.12	2.84	1.89	1.86	1.24	3.16	2.11
	16	1.57	1.05	2.56	1.70	1.74	1.16	2.87	1.91	1.92	1.28	3.21	2.13
	17	1.63	1.08	2.59	1.72	1.80	1.20	2.91	1.93	2.00	1.33	3.25	2.16
	18	1.69	1.13	2.62	1.74	1.87	1.25	2.94	1.96	2.08	1.38	3.30	2.19
	19	1.76	1.17	2.65	1.76	1.95	1.30	2.98	1.98	2.17	1.44	3.34	2.22
	20	1.84	1.22	2.68	1.78	2.04	1.36	3.02	2.01	2.26	1.51	3.39	2.26
	22	2.02	1.34	2.74	1.83	2.24	1.49	3.10	2.06	2.49	1.66	3.49	2.32
	24	2.24	1.49	2.81	1.87	2.48	1.65	3.19	2.12	2.76	1.84	3.60	2.40
	26	2.50	1.66	2.88	1.92	2.78	1.85	3.28	2.18	3.09	2.06	3.71	2.47
	28	2.81	1.87	2.95	1.97	3.13	2.08	3.37	2.24	3.50	2.33	3.84	2.55
	30	3.20	2.13	3.03	2.02	3.57	2.38	3.47	2.31	4.00	2.66	3.96	2.64
	32	3.64	2.42	3.11	2.07	4.07	2.71	3.58	2.38	4.55	3.02	4.10	2.73
	34	4.11	2.74	3.20	2.13	4.59	3.05	3.69	2.46	5.13	3.41	4.25	2.83
	36	4.61	3.07	3.29	2.19	5.15	3.42	3.81	2.54	5.75	3.83	4.41	2.93
	38	5.14	3.42	3.39	2.26	5.73	3.81	3.94	2.62	6.41	4.26	4.58	3.05
	40	5.69	3.79	3.49	2.32	6.35	4.23	4.08	2.72	7.10	4.73	4.78	3.18
Other Constants and Properties													
$b_y \times 10^3$, (kip-ft)$^{-1}$		5.28		3.51		5.90		3.92		6.56		4.37	
$t_y \times 10^3$, (kips)$^{-1}$		1.18		0.788		1.30		0.868		1.44		0.958	
$t_r \times 10^3$, (kips)$^{-1}$		1.45		0.970		1.60		1.07		1.77		1.18	
r_x/r_y		1.76				1.75				1.75			
r_y, in.		3.09				3.07				3.05			

W12

Table 6-1 (continued)
Combined Flexure and Axial Force
W-Shapes

F_y = 50 ksi

Shape		W12×											
		72				65[f]				58			
Design		$p \times 10^3$ (kips)$^{-1}$		$b_x \times 10^3$ (kip-ft)$^{-1}$		$p \times 10^3$ (kips)$^{-1}$		$b_x \times 10^3$ (kip-ft)$^{-1}$		$p \times 10^3$ (kips)$^{-1}$		$b_x \times 10^3$ (kip-ft)$^{-1}$	
		ASD	LRFD	ASD	LRFD	ASD	LRFD	ASD	LRFD	ASD	LRFD	ASD	LRFD
Effective length, KL (ft), with respect to least radius of gyration, r_y, or Unbraced Length, L_b (ft), for X-X axis bending	0	1.58	1.05	3.30	2.19	1.75	1.16	3.75	2.50	1.96	1.31	4.12	2.74
	6	1.65	1.10	3.30	2.19	1.82	1.21	3.75	2.50	2.09	1.39	4.12	2.74
	7	1.67	1.11	3.30	2.19	1.85	1.23	3.75	2.50	2.13	1.42	4.12	2.74
	8	1.70	1.13	3.30	2.19	1.88	1.25	3.75	2.50	2.19	1.45	4.12	2.74
	9	1.74	1.16	3.30	2.19	1.92	1.28	3.75	2.50	2.25	1.50	4.13	2.75
	10	1.77	1.18	3.30	2.19	1.96	1.31	3.75	2.50	2.32	1.54	4.21	2.80
	11	1.82	1.21	3.31	2.20	2.01	1.34	3.75	2.50	2.41	1.60	4.28	2.85
	12	1.87	1.24	3.36	2.23	2.06	1.37	3.75	2.50	2.50	1.66	4.36	2.90
	13	1.92	1.28	3.40	2.27	2.13	1.41	3.81	2.54	2.61	1.73	4.45	2.96
	14	1.98	1.32	3.45	2.30	2.19	1.46	3.87	2.58	2.73	1.81	4.53	3.02
	15	2.05	1.36	3.50	2.33	2.27	1.51	3.93	2.62	2.86	1.90	4.62	3.07
	16	2.12	1.41	3.56	2.37	2.35	1.56	4.00	2.66	3.01	2.01	4.71	3.14
	17	2.20	1.46	3.61	2.40	2.44	1.62	4.06	2.70	3.18	2.12	4.81	3.20
	18	2.29	1.52	3.67	2.44	2.54	1.69	4.13	2.75	3.38	2.25	4.91	3.27
	19	2.39	1.59	3.72	2.48	2.65	1.77	4.20	2.80	3.59	2.39	5.01	3.34
	20	2.50	1.66	3.78	2.52	2.77	1.85	4.27	2.84	3.83	2.55	5.12	3.41
	22	2.75	1.83	3.91	2.60	3.06	2.03	4.43	2.95	4.41	2.94	5.36	3.56
	24	3.05	2.03	4.04	2.69	3.40	2.26	4.59	3.06	5.15	3.43	5.61	3.74
	26	3.42	2.28	4.18	2.78	3.82	2.54	4.77	3.17	6.05	4.02	5.90	3.92
	28	3.87	2.57	4.33	2.88	4.32	2.88	4.96	3.30	7.01	4.67	6.21	4.13
	30	4.42	2.94	4.49	2.99	4.95	3.29	5.17	3.44	8.05	5.36	6.57	4.37
	32	5.03	3.35	4.67	3.10	5.63	3.75	5.39	3.59	9.16	6.09	7.12	4.74
	34	5.68	3.78	4.86	3.23	6.36	4.23	5.64	3.75	10.3	6.88	7.66	5.10
	36	6.37	4.24	5.06	3.37	7.13	4.74	5.97	3.98	11.6	7.71	8.21	5.46
	38	7.09	4.72	5.32	3.54	7.94	5.28	6.39	4.25	12.9	8.59	8.75	5.82
	40	7.86	5.23	5.66	3.76	8.80	5.85	6.81	4.53	14.3	9.52	9.29	6.18
Other Constants and Properties													
$b_y \times 10^3$, (kip-ft)$^{-1}$		7.24		4.82		8.31		5.53		11.0		7.29	
$t_y \times 10^3$, (kips)$^{-1}$		1.58		1.05		1.75		1.16		1.96		1.31	
$t_r \times 10^3$, (kips)$^{-1}$		1.94		1.30		2.15		1.43		2.41		1.61	
r_x/r_y		1.75				1.75				2.10			
r_y, in.		3.04				3.02				2.51			

[f] Shape does not meet compact limit for flexure with F_y = 50 ksi.

F_y = 50 ksi

Table 6-1 (continued)
Combined Flexure and Axial Force
W-Shapes

W12

Shape		W12×											
		53				50				45			
Design		$p \times 10^3$ (kips)$^{-1}$		$b_x \times 10^3$ (kip-ft)$^{-1}$		$p \times 10^3$ (kips)$^{-1}$		$b_x \times 10^3$ (kip-ft)$^{-1}$		$p \times 10^3$ (kips)$^{-1}$		$b_x \times 10^3$ (kip-ft)$^{-1}$	
		ASD	LRFD	ASD	LRFD	ASD	LRFD	ASD	LRFD	ASD	LRFD	ASD	LRFD
Effective length, KL (ft), with respect to least radius of gyration, r_y, or Unbraced Length, L_b (ft), for X-X axis bending	0	2.14	1.42	4.57	3.04	2.29	1.52	4.96	3.30	2.55	1.70	5.55	3.69
	6	2.28	1.52	4.57	3.04	2.52	1.68	4.96	3.30	2.82	1.87	5.55	3.69
	7	2.33	1.55	4.57	3.04	2.62	1.74	4.96	3.30	2.92	1.94	5.56	3.70
	8	2.39	1.59	4.57	3.04	2.73	1.81	5.08	3.38	3.04	2.03	5.70	3.79
	9	2.46	1.64	4.59	3.06	2.86	1.90	5.19	3.46	3.19	2.12	5.84	3.89
	10	2.54	1.69	4.68	3.12	3.01	2.00	5.32	3.54	3.36	2.24	6.00	3.99
	11	2.63	1.75	4.77	3.18	3.19	2.12	5.45	3.62	3.56	2.37	6.15	4.09
	12	2.74	1.82	4.87	3.24	3.39	2.26	5.58	3.72	3.80	2.53	6.32	4.21
	13	2.86	1.90	4.97	3.31	3.64	2.42	5.73	3.81	4.07	2.71	6.50	4.32
	14	2.99	1.99	5.07	3.38	3.91	2.60	5.88	3.91	4.39	2.92	6.69	4.45
	15	3.15	2.09	5.18	3.45	4.24	2.82	6.04	4.02	4.75	3.16	6.88	4.58
	16	3.32	2.21	5.29	3.52	4.61	3.07	6.20	4.13	5.18	3.45	7.09	4.72
	17	3.51	2.34	5.41	3.60	5.05	3.36	6.38	4.25	5.68	3.78	7.32	4.87
	18	3.73	2.48	5.53	3.68	5.56	3.70	6.57	4.37	6.25	4.16	7.56	5.03
	19	3.97	2.64	5.66	3.77	6.17	4.10	6.77	4.50	6.94	4.62	7.81	5.20
	20	4.25	2.83	5.80	3.86	6.83	4.55	6.98	4.64	7.69	5.12	8.08	5.38
	22	4.90	3.26	6.09	4.05	8.27	5.50	7.45	4.95	9.31	6.19	8.69	5.78
	24	5.75	3.83	6.41	4.26	9.84	6.55	8.01	5.33	11.1	7.37	9.66	6.43
	26	6.75	4.49	6.77	4.50	11.5	7.68	8.84	5.88	13.0	8.65	10.7	7.11
	28	7.83	5.21	7.16	4.77	13.4	8.91	9.67	6.44	15.1	10.0	11.7	7.80
	30	8.99	5.98	7.81	5.20	15.4	10.2	10.5	6.99	17.3	11.5	12.8	8.48
	32	10.2	6.80	8.48	5.64	17.5	11.6	11.3	7.53	19.7	13.1	13.8	9.16
	34	11.5	7.68	9.15	6.09								
	36	12.9	8.61	9.81	6.53								
	38	14.4	9.59	10.5	6.97								
	40	16.0	10.6	11.1	7.41								

Other Constants and Properties						
$b_y \times 10^3$, (kip-ft)$^{-1}$	12.2	8.15	16.7	11.1	18.8	12.5
$t_y \times 10^3$, (kips)$^{-1}$	2.14	1.42	2.29	1.52	2.55	1.70
$t_r \times 10^3$, (kips)$^{-1}$	2.63	1.75	2.81	1.87	3.13	2.09
r_x/r_y	2.11		2.64		2.64	
r_y, in.	2.48		1.96		1.95	

Note: Heavy line indicates KL/r_y equal to or greater than 200.

W12

Table 6-1 (continued)
Combined Flexure and Axial Force
W-Shapes

F_y = 50 ksi

Shape		W12×											
		40				35[c]				30[c]			
Design		$p \times 10^3$ (kips)$^{-1}$		$b_x \times 10^3$ (kip-ft)$^{-1}$		$p \times 10^3$ (kips)$^{-1}$		$b_x \times 10^3$ (kip-ft)$^{-1}$		$p \times 10^3$ (kips)$^{-1}$		$b_x \times 10^3$ (kip-ft)$^{-1}$	
		ASD	LRFD	ASD	LRFD	ASD	LRFD	ASD	LRFD	ASD	LRFD	ASD	LRFD
Effective length, KL (ft), with respect to least radius of gyration, r_y, or Unbraced Length, L_b (ft), for X-X axis bending	0	2.85	1.90	6.25	4.16	3.25	2.17	6.96	4.63	3.94	2.62	8.27	5.50
	6	3.16	2.10	6.25	4.16	3.80	2.53	7.09	4.72	4.54	3.02	8.46	5.63
	7	3.27	2.18	6.27	4.17	4.03	2.68	7.34	4.89	4.79	3.19	8.79	5.85
	8	3.41	2.27	6.44	4.29	4.31	2.87	7.61	5.07	5.10	3.39	9.14	6.08
	9	3.58	2.38	6.62	4.40	4.65	3.09	7.90	5.26	5.50	3.66	9.53	6.34
	10	3.78	2.51	6.80	4.53	5.05	3.36	8.22	5.47	5.99	3.99	9.94	6.62
	11	4.00	2.66	7.00	4.66	5.55	3.69	8.56	5.69	6.60	4.39	10.4	6.92
	12	4.27	2.84	7.21	4.79	6.15	4.09	8.93	5.94	7.32	4.87	10.9	7.25
	13	4.58	3.05	7.43	4.94	6.87	4.57	9.33	6.21	8.21	5.46	11.5	7.62
	14	4.94	3.29	7.66	5.10	7.74	5.15	9.77	6.50	9.28	6.18	12.1	8.02
	15	5.36	3.56	7.91	5.26	8.82	5.87	10.3	6.82	10.6	7.06	12.7	8.48
	16	5.84	3.89	8.18	5.44	10.0	6.68	10.8	7.18	12.1	8.04	13.7	9.13
	17	6.41	4.26	8.46	5.63	11.3	7.54	11.5	7.66	13.6	9.07	15.0	10.0
	18	7.07	4.70	8.77	5.83	12.7	8.45	12.5	8.30	15.3	10.2	16.4	10.9
	19	7.85	5.23	9.10	6.05	14.2	9.42	13.4	8.94	17.0	11.3	17.7	11.8
	20	8.70	5.79	9.45	6.29	15.7	10.4	14.4	9.59	18.9	12.6	19.0	12.7
	22	10.5	7.01	10.5	6.96	19.0	12.6	16.3	10.9	22.8	15.2	21.7	14.5
	24	12.5	8.34	11.8	7.83	22.6	15.0	18.3	12.2	27.2	18.1	24.4	16.3
	26	14.7	9.79	13.1	8.69								
	28	17.1	11.3	14.4	9.56								
	30	19.6	13.0	15.7	10.4								
	32	22.3	14.8	16.9	11.3								

Other Constants and Properties

$b_y \times 10^3$, (kip-ft)$^{-1}$	21.2	14.1	31.0	20.6	37.3	24.8
$t_y \times 10^3$, (kips)$^{-1}$	2.85	1.90	3.24	2.16	3.80	2.53
$t_r \times 10^3$, (kips)$^{-1}$	3.51	2.34	3.98	2.66	4.67	3.11
r_x/r_y	2.64		3.41		3.43	
r_y, in.	1.94		1.54		1.52	

[c] Shape is slender for compression with F_y = 50 ksi.

Note: Heavy line indicates KL/r_y equal to or greater than 200.

F_y = 50 ksi

Table 6-1 (continued)
Combined Flexure and Axial Force
W-Shapes

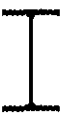

Shape		W12×											
		26[c]				22[c]				19[c]			
Design		$p \times 10^3$ (kips)$^{-1}$		$b_x \times 10^3$ (kip-ft)$^{-1}$		$p \times 10^3$ (kips)$^{-1}$		$b_x \times 10^3$ (kip-ft)$^{-1}$		$p \times 10^3$ (kips)$^{-1}$		$b_x \times 10^3$ (kip-ft)$^{-1}$	
		ASD	LRFD	ASD	LRFD	ASD	LRFD	ASD	LRFD	ASD	LRFD	ASD	LRFD
Effective length, KL (ft), with respect to least radius of gyration, r_y, or Unbraced Length, L_b (ft), for X-X axis bending	0	4.66	3.10	9.58	6.37	5.42	3.60	12.2	8.09	6.52	4.34	14.4	9.60
	1	4.67	3.11	9.58	6.37	5.48	3.65	12.2	8.09	6.60	4.39	14.4	9.60
	2	4.73	3.14	9.58	6.37	5.68	3.78	12.2	8.09	6.84	4.55	14.4	9.60
	3	4.82	3.21	9.58	6.37	6.03	4.01	12.2	8.09	7.28	4.84	14.5	9.66
	4	4.95	3.29	9.58	6.37	6.58	4.38	13.0	8.65	7.95	5.29	15.6	10.4
	5	5.13	3.41	9.58	6.37	7.43	4.95	14.0	9.28	8.97	5.97	16.9	11.2
	6	5.36	3.56	9.83	6.54	8.73	5.81	15.1	10.0	10.5	6.99	18.4	12.2
	7	5.64	3.75	10.2	6.81	10.6	7.03	16.4	10.9	12.9	8.56	20.2	13.4
	8	6.00	3.99	10.7	7.11	13.2	8.75	17.9	11.9	16.3	10.8	22.3	14.9
	9	6.43	4.28	11.2	7.43	16.7	11.1	19.8	13.1	20.6	13.7	25.7	17.1
	10	6.97	4.64	11.7	7.79	20.6	13.7	23.0	15.3	25.5	16.9	30.4	20.2
	11	7.64	5.08	12.3	8.17	24.9	16.5	26.5	17.6	30.8	20.5	35.2	23.4
	12	8.49	5.65	12.9	8.60	29.6	19.7	30.0	20.0	36.7	24.4	40.1	26.7
	13	9.53	6.34	13.6	9.08	34.7	23.1	33.5	22.3	43.0	28.6	45.1	30.0
	14	10.8	7.18	14.4	9.61	40.3	26.8	37.1	24.7				
	15	12.4	8.22	15.4	10.3								
	16	14.1	9.36	17.1	11.4								
	17	15.9	10.6	18.8	12.5								
	18	17.8	11.8	20.6	13.7								
	19	19.8	13.2	22.3	14.9								
	20	22.0	14.6	24.1	16.0								
	21	24.2	16.1	25.9	17.2								
	22	26.6	17.7	27.7	18.4								
	23	29.1	19.3	29.5	19.6								
	24	31.6	21.0	31.3	20.8								
	25	34.3	22.8	33.1	22.0								
Other Constants and Properties													
$b_y \times 10^3$, (kip-ft)$^{-1}$		43.6		29.0		97.3		64.8		120		79.5	
$t_y \times 10^3$, (kips)$^{-1}$		4.37		2.90		5.15		3.43		6.00		3.99	
$t_r \times 10^3$, (kips)$^{-1}$		5.36		3.58		6.33		4.22		7.37		4.91	
r_x/r_y		3.42				5.79				5.86			
r_y, in.		1.51				0.848				0.822			

[c] Shape is slender for compression with F_y = 50 ksi.

Note: Heavy line indicates KL/r_y equal to or greater than 200.

W12

Table 6-1 (continued)
Combined Flexure and Axial Force
W-Shapes

F_y = 50 ksi

Shape		W12×							
		16[c]				14[c,v]			
Design		$p \times 10^3$ (kips)$^{-1}$		$b_x \times 10^3$ (kip-ft)$^{-1}$		$p \times 10^3$ (kips)$^{-1}$		$b_x \times 10^3$ (kip-ft)$^{-1}$	
		ASD	LRFD	ASD	LRFD	ASD	LRFD	ASD	LRFD
Effective length, KL (ft), with respect to least radius of gyration, r_y, or Unbraced Length, L_b (ft), for X-X axis bending	0	7.98	5.31	17.7	11.8	9.39	6.24	20.5	13.6
	1	8.08	5.38	17.7	11.8	9.50	6.32	20.5	13.6
	2	8.39	5.59	17.7	11.8	9.88	6.57	20.5	13.6
	3	8.97	5.96	18.1	12.0	10.5	7.02	21.0	14.0
	4	9.87	6.57	19.6	13.1	11.6	7.73	22.9	15.2
	5	11.3	7.49	21.4	14.3	13.3	8.83	25.1	16.7
	6	13.4	8.91	23.6	15.7	15.8	10.5	27.8	18.5
	7	16.8	11.2	26.3	17.5	19.9	13.3	31.2	20.7
	8	21.8	14.5	29.6	19.7	26.0	17.3	36.4	24.2
	9	27.6	18.3	36.1	24.0	32.9	21.9	44.6	29.7
	10	34.0	22.6	42.9	28.5	40.6	27.0	53.3	35.5
	11	41.2	27.4	50.0	33.3	49.1	32.7	62.4	41.5
	12	49.0	32.6	57.2	38.1	58.5	38.9	71.8	47.8
Other Constants and Properties									
$b_y \times 10^3$, (kip-ft)$^{-1}$		158		105		188		125	
$t_y \times 10^3$, (kips)$^{-1}$		7.09		4.72		8.03		5.34	
$t_r \times 10^3$, (kips)$^{-1}$		8.71		5.81		9.86		6.57	
r_x/r_y		6.04				6.14			
r_y, in.		0.773				0.753			

[c] Shape is slender for compression with F_y = 50 ksi.
[v] Shape does not meet the h/t_w limit for shear in AISC *Specification* Section G2.1(a) with F_y = 50 ksi; therefore, ϕ_v = 0.90 and Ω_v = 1.67.
Note: Heavy line indicates KL/r_y equal to or greater than 200.

F_y = 50 ksi

Table 6-1 (continued)
Combined Flexure and Axial Force
W-Shapes

W10

Shape		W10×											
		112				100				88			
Design		$p \times 10^3$ (kips)$^{-1}$		$b_x \times 10^3$ (kip-ft)$^{-1}$		$p \times 10^3$ (kips)$^{-1}$		$b_x \times 10^3$ (kip-ft)$^{-1}$		$p \times 10^3$ (kips)$^{-1}$		$b_x \times 10^3$ (kip-ft)$^{-1}$	
		ASD	LRFD	ASD	LRFD	ASD	LRFD	ASD	LRFD	ASD	LRFD	ASD	LRFD
Effective length, KL (ft), with respect to least radius of gyration, r_y, or Unbraced Length, L_b (ft), for X-X axis bending	0	1.02	0.675	2.42	1.61	1.14	0.758	2.74	1.82	1.28	0.855	3.15	2.10
	6	1.07	0.712	2.42	1.61	1.20	0.800	2.74	1.82	1.36	0.903	3.15	2.10
	7	1.09	0.726	2.42	1.61	1.23	0.816	2.74	1.82	1.38	0.921	3.15	2.10
	8	1.12	0.742	2.42	1.61	1.25	0.835	2.74	1.82	1.42	0.942	3.15	2.10
	9	1.14	0.761	2.42	1.61	1.29	0.856	2.74	1.82	1.45	0.967	3.15	2.10
	10	1.18	0.782	2.43	1.62	1.32	0.881	2.75	1.83	1.50	0.995	3.17	2.11
	11	1.21	0.807	2.45	1.63	1.37	0.909	2.78	1.85	1.54	1.03	3.20	2.13
	12	1.25	0.834	2.47	1.64	1.41	0.941	2.80	1.86	1.60	1.06	3.23	2.15
	13	1.30	0.865	2.49	1.66	1.47	0.977	2.82	1.88	1.66	1.11	3.27	2.17
	14	1.35	0.900	2.51	1.67	1.53	1.02	2.85	1.90	1.73	1.15	3.30	2.19
	15	1.41	0.939	2.53	1.68	1.60	1.06	2.87	1.91	1.81	1.20	3.33	2.22
	16	1.48	0.983	2.55	1.69	1.67	1.11	2.90	1.93	1.90	1.26	3.36	2.24
	17	1.55	1.03	2.56	1.71	1.76	1.17	2.92	1.94	1.99	1.33	3.40	2.26
	18	1.63	1.09	2.59	1.72	1.85	1.23	2.95	1.96	2.10	1.40	3.43	2.28
	19	1.72	1.15	2.61	1.73	1.96	1.30	2.98	1.98	2.23	1.48	3.47	2.31
	20	1.82	1.21	2.63	1.75	2.08	1.38	3.00	2.00	2.36	1.57	3.50	2.33
	22	2.06	1.37	2.67	1.78	2.36	1.57	3.06	2.03	2.68	1.79	3.58	2.38
	24	2.36	1.57	2.71	1.80	2.70	1.80	3.11	2.07	3.09	2.05	3.65	2.43
	26	2.74	1.82	2.76	1.83	3.15	2.09	3.17	2.11	3.60	2.40	3.73	2.48
	28	3.18	2.11	2.80	1.87	3.65	2.43	3.23	2.15	4.18	2.78	3.82	2.54
	30	3.65	2.43	2.85	1.90	4.19	2.79	3.30	2.19	4.79	3.19	3.90	2.60
	32	4.15	2.76	2.90	1.93	4.77	3.17	3.36	2.24	5.46	3.63	4.00	2.66
	34	4.69	3.12	2.95	1.97	5.38	3.58	3.43	2.28	6.16	4.10	4.09	2.72
	36	5.25	3.50	3.01	2.00	6.03	4.01	3.50	2.33	6.90	4.59	4.19	2.79
	38	5.85	3.90	3.06	2.04	6.72	4.47	3.58	2.38	7.69	5.12	4.30	2.86
	40	6.49	4.32	3.12	2.08	7.45	4.96	3.66	2.43	8.52	5.67	4.41	2.94
Other Constants and Properties													
$b_y \times 10^3$, (kip-ft)$^{-1}$		5.15		3.43		5.84		3.89		6.71		4.46	
$f_y \times 10^3$, (kips)$^{-1}$		1.02		0.675		1.14		0.758		1.28		0.855	
$f_r \times 10^3$, (kips)$^{-1}$		1.25		0.831		1.40		0.933		1.58		1.05	
r_x/r_y		1.74				1.74				1.73			
r_y, in.		2.68				2.65				2.63			

W10

Table 6-1 (continued)
Combined Flexure and Axial Force
W-Shapes

F_y = 50 ksi

Shape		W10×											
		77				68				60			
Design		$p \times 10^3$ (kips)$^{-1}$		$b_x \times 10^3$ (kip-ft)$^{-1}$		$p \times 10^3$ (kips)$^{-1}$		$b_x \times 10^3$ (kip-ft)$^{-1}$		$p \times 10^3$ (kips)$^{-1}$		$b_x \times 10^3$ (kip-ft)$^{-1}$	
		ASD	LRFD	ASD	LRFD	ASD	LRFD	ASD	LRFD	ASD	LRFD	ASD	LRFD
Effective length, KL (ft), with respect to least radius of gyration, r_y, or Unbraced Length, L_b (ft), for X-X axis bending	0	1.47	0.979	3.65	2.43	1.68	1.12	4.18	2.78	1.89	1.26	4.78	3.18
	6	1.56	1.04	3.65	2.43	1.78	1.18	4.18	2.78	2.00	1.33	4.78	3.18
	7	1.59	1.06	3.65	2.43	1.81	1.21	4.18	2.78	2.04	1.36	4.78	3.18
	8	1.63	1.08	3.65	2.43	1.86	1.23	4.18	2.78	2.09	1.39	4.78	3.18
	9	1.67	1.11	3.65	2.43	1.91	1.27	4.18	2.78	2.15	1.43	4.78	3.18
	10	1.72	1.14	3.68	2.45	1.96	1.31	4.22	2.81	2.21	1.47	4.84	3.22
	11	1.78	1.18	3.72	2.48	2.03	1.35	4.27	2.84	2.29	1.52	4.90	3.26
	12	1.84	1.23	3.76	2.50	2.10	1.40	4.32	2.88	2.37	1.58	4.97	3.31
	13	1.91	1.27	3.80	2.53	2.19	1.46	4.38	2.91	2.47	1.64	5.04	3.36
	14	2.00	1.33	3.85	2.56	2.28	1.52	4.44	2.95	2.58	1.72	5.12	3.41
	15	2.09	1.39	3.89	2.59	2.39	1.59	4.49	2.99	2.70	1.80	5.19	3.46
	16	2.19	1.46	3.94	2.62	2.51	1.67	4.55	3.03	2.84	1.89	5.27	3.51
	17	2.31	1.54	3.98	2.65	2.64	1.76	4.61	3.07	2.99	1.99	5.35	3.56
	18	2.44	1.62	4.03	2.68	2.79	1.86	4.67	3.11	3.16	2.10	5.43	3.62
	19	2.58	1.72	4.08	2.71	2.96	1.97	4.74	3.15	3.36	2.23	5.52	3.67
	20	2.74	1.83	4.13	2.74	3.14	2.09	4.80	3.20	3.57	2.38	5.61	3.73
	22	3.13	2.08	4.23	2.81	3.59	2.39	4.94	3.29	4.08	2.72	5.79	3.85
	24	3.61	2.40	4.33	2.88	4.15	2.76	5.08	3.38	4.73	3.14	5.99	3.99
	26	4.22	2.81	4.45	2.96	4.85	3.23	5.24	3.49	5.54	3.69	6.20	4.13
	28	4.89	3.26	4.56	3.04	5.63	3.74	5.40	3.59	6.42	4.27	6.43	4.28
	30	5.62	3.74	4.69	3.12	6.46	4.30	5.57	3.71	7.38	4.91	6.67	4.44
	32	6.39	4.25	4.82	3.21	7.35	4.89	5.76	3.83	8.39	5.58	6.94	4.61
	34	7.22	4.80	4.96	3.30	8.30	5.52	5.96	3.96	9.47	6.30	7.22	4.80
	36	8.09	5.38	5.11	3.40	9.30	6.19	6.17	4.10	10.6	7.07	7.53	5.01
	38	9.02	6.00	5.26	3.50	10.4	6.90	6.40	4.26	11.8	7.87	7.96	5.30
	40	9.99	6.65	5.43	3.61	11.5	7.64	6.64	4.42	13.1	8.72	8.43	5.61
Other Constants and Properties													
$b_y \times 10^3$, (kip-ft)$^{-1}$		7.76		5.16		8.88		5.91		10.2		6.77	
$t_y \times 10^3$, (kips)$^{-1}$		1.47		0.979		1.68		1.12		1.89		1.26	
$t_r \times 10^3$, (kips)$^{-1}$		1.81		1.20		2.06		1.37		2.32		1.55	
r_x/r_y		1.73				1.71				1.71			
r_y, in.		2.60				2.59				2.57			

Table 6-1 (continued)
Combined Flexure and Axial Force
W-Shapes

F_y = 50 ksi

W10

Shape		W10×											
		54				49				45			
Design		$p \times 10^3$ (kips)$^{-1}$		$b_x \times 10^3$ (kip-ft)$^{-1}$		$p \times 10^3$ (kips)$^{-1}$		$b_x \times 10^3$ (kip-ft)$^{-1}$		$p \times 10^3$ (kips)$^{-1}$		$b_x \times 10^3$ (kip-ft)$^{-1}$	
		ASD	LRFD	ASD	LRFD	ASD	LRFD	ASD	LRFD	ASD	LRFD	ASD	LRFD
Effective length, KL (ft), with respect to least radius of gyration, r_y, or Unbraced Length, L_b (ft), for X-X axis bending	0	2.11	1.41	5.35	3.56	2.32	1.54	5.90	3.92	2.51	1.67	6.49	4.32
	6	2.24	1.49	5.35	3.56	2.46	1.64	5.90	3.92	2.76	1.84	6.49	4.32
	7	2.29	1.52	5.35	3.56	2.51	1.67	5.90	3.92	2.85	1.90	6.49	4.32
	8	2.34	1.56	5.35	3.56	2.57	1.71	5.90	3.92	2.97	1.97	6.60	4.39
	9	2.41	1.60	5.35	3.56	2.65	1.76	5.90	3.93	3.10	2.06	6.73	4.48
	10	2.48	1.65	5.43	3.61	2.73	1.82	6.00	3.99	3.26	2.17	6.87	4.57
	11	2.57	1.71	5.51	3.67	2.83	1.88	6.10	4.06	3.44	2.29	7.00	4.66
	12	2.66	1.77	5.60	3.72	2.93	1.95	6.20	4.13	3.65	2.43	7.15	4.76
	13	2.77	1.85	5.69	3.78	3.06	2.03	6.31	4.20	3.90	2.60	7.30	4.86
	14	2.90	1.93	5.78	3.85	3.19	2.12	6.42	4.27	4.19	2.78	7.46	4.96
	15	3.03	2.02	5.88	3.91	3.35	2.23	6.54	4.35	4.51	3.00	7.63	5.07
	16	3.19	2.12	5.97	3.97	3.52	2.34	6.66	4.43	4.89	3.26	7.80	5.19
	17	3.36	2.24	6.08	4.04	3.72	2.47	6.78	4.51	5.33	3.55	7.98	5.31
	18	3.56	2.37	6.18	4.11	3.94	2.62	6.91	4.60	5.84	3.89	8.17	5.44
	19	3.78	2.51	6.29	4.19	4.18	2.78	7.04	4.69	6.44	4.28	8.37	5.57
	20	4.02	2.67	6.40	4.26	4.46	2.96	7.18	4.78	7.13	4.75	8.58	5.71
	22	4.60	3.06	6.64	4.42	5.11	3.40	7.48	4.98	8.63	5.74	9.03	6.01
	24	5.33	3.55	6.90	4.59	5.94	3.95	7.80	5.19	10.3	6.83	9.53	6.34
	26	6.25	4.16	7.18	4.78	6.97	4.64	8.15	5.42	12.1	8.02	10.1	6.71
	28	7.25	4.83	7.48	4.98	8.08	5.38	8.53	5.68	14.0	9.30	10.9	7.22
	30	8.33	5.54	7.81	5.20	9.28	6.17	8.95	5.96	16.0	10.7	11.7	7.82
	32	9.47	6.30	8.17	5.43	10.6	7.03	9.47	6.30	18.3	12.1	12.6	8.41
	34	10.7	7.12	8.60	5.72	11.9	7.93	10.2	6.77				
	36	12.0	7.98	9.19	6.11	13.4	8.89	10.9	7.24				
	38	13.4	8.89	9.77	6.50	14.9	9.91	11.6	7.71				
	40	14.8	9.85	10.4	6.89	16.5	11.0	12.3	8.18				
Other Constants and Properties													
$b_y \times 10^3$, (kip-ft)$^{-1}$		11.4		7.57		12.6		8.38		17.6		11.7	
$t_y \times 10^3$, (kips)$^{-1}$		2.11		1.41		2.32		1.54		2.51		1.67	
$t_r \times 10^3$, (kips)$^{-1}$		2.60		1.73		2.85		1.90		3.08		2.06	
r_x/r_y		1.71				1.71				2.15			
r_y, in.		2.56				2.54				2.01			

Note: Heavy line indicates KL/r_y equal to or greater than 200.

W10

Table 6-1 (continued)
Combined Flexure and Axial Force
W-Shapes

F_y = 50 ksi

Shape		W10×											
		39				33				30			
Design		$p \times 10^3$ (kips)$^{-1}$		$b_x \times 10^3$ (kip-ft)$^{-1}$		$p \times 10^3$ (kips)$^{-1}$		$b_x \times 10^3$ (kip-ft)$^{-1}$		$p \times 10^3$ (kips)$^{-1}$		$b_x \times 10^3$ (kip-ft)$^{-1}$	
		ASD	LRFD	ASD	LRFD	ASD	LRFD	ASD	LRFD	ASD	LRFD	ASD	LRFD
Effective length, KL (ft), with respect to least radius of gyration, r_y, or Unbraced Length, L_b (ft), for X-X axis bending	0	2.90	1.93	7.61	5.06	3.44	2.29	9.18	6.11	3.78	2.51	9.73	6.48
	6	3.20	2.13	7.61	5.06	3.80	2.53	9.18	6.11	4.62	3.08	10.1	6.74
	7	3.31	2.20	7.61	5.07	3.95	2.62	9.22	6.13	4.97	3.31	10.5	6.99
	8	3.45	2.29	7.78	5.18	4.11	2.74	9.45	6.29	5.41	3.60	10.9	7.25
	9	3.61	2.40	7.96	5.29	4.31	2.87	9.70	6.45	5.95	3.96	11.3	7.53
	10	3.80	2.53	8.14	5.41	4.55	3.03	9.96	6.62	6.62	4.41	11.8	7.84
	11	4.02	2.67	8.33	5.54	4.83	3.21	10.2	6.81	7.45	4.96	12.3	8.17
	12	4.28	2.84	8.53	5.67	5.15	3.42	10.5	7.00	8.47	5.64	12.8	8.54
	13	4.57	3.04	8.74	5.81	5.52	3.67	10.8	7.20	9.76	6.49	13.4	8.93
	14	4.92	3.27	8.96	5.96	5.95	3.96	11.2	7.42	11.3	7.53	14.1	9.37
	15	5.31	3.54	9.19	6.12	6.45	4.29	11.5	7.65	13.0	8.64	14.8	9.85
	16	5.78	3.84	9.44	6.28	7.04	4.68	11.9	7.89	14.8	9.83	15.6	10.4
	17	6.31	4.20	9.70	6.45	7.72	5.14	12.3	8.15	16.7	11.1	16.8	11.2
	18	6.93	4.61	9.97	6.63	8.51	5.67	12.7	8.43	18.7	12.4	18.1	12.1
	19	7.67	5.10	10.3	6.82	9.46	6.30	13.1	8.73	20.8	13.9	19.4	12.9
	20	8.59	5.66	10.6	7.03	10.5	6.98	13.6	9.05	23.1	15.4	20.7	13.8
	22	10.3	6.84	11.2	7.47	12.7	8.44	14.8	9.82	27.9	18.6	23.2	15.4
	24	12.2	8.14	12.0	7.98	15.1	10.0	16.5	11.0				
	26	14.4	9.56	13.2	8.77	17.7	11.8	18.3	12.2				
	28	16.7	11.1	14.4	9.58	20.6	13.7	20.1	13.4				
	30	19.1	12.7	15.6	10.4	23.6	15.7	21.9	14.5				
	32	21.8	14.5	16.8	11.2	26.8	17.9	23.6	15.7				

Other Constants and Properties						
$b_y \times 10^3$, (kip-ft)$^{-1}$	20.7	13.8	25.4	16.9	40.3	26.8
$t_y \times 10^3$, (kips)$^{-1}$	2.90	1.93	3.44	2.29	3.78	2.51
$t_r \times 10^3$, (kips)$^{-1}$	3.57	2.38	4.23	2.82	4.64	3.09
r_x/r_y	2.16		2.16		3.20	
r_y, in.	1.98		1.94		1.37	

Note: Heavy line indicates KL/r_y equal to or greater than 200.

Table 6-1 (continued)
Combined Flexure and Axial Force
W-Shapes

F_y = 50 ksi

Shape		W10×											
		26				22[c]				19			
Design		$p \times 10^3$ (kips)$^{-1}$		$b_x \times 10^3$ (kip-ft)$^{-1}$		$p \times 10^3$ (kips)$^{-1}$		$b_x \times 10^3$ (kip-ft)$^{-1}$		$p \times 10^3$ (kips)$^{-1}$		$b_x \times 10^3$ (kip-ft)$^{-1}$	
		ASD	LRFD	ASD	LRFD	ASD	LRFD	ASD	LRFD	ASD	LRFD	ASD	LRFD
Effective length, KL (ft), with respect to least radius of gyration, r_y, or Unbraced Length, L_b (ft), for X-X axis bending	0	4.39	2.92	11.4	7.57	5.19	3.45	13.7	9.12	5.94	3.95	16.5	11.0
	1	4.41	2.94	11.4	7.57	5.22	3.47	13.7	9.12	6.03	4.01	16.5	11.0
	2	4.49	2.99	11.4	7.57	5.30	3.53	13.7	9.12	6.28	4.18	16.5	11.0
	3	4.62	3.07	11.4	7.57	5.44	3.62	13.7	9.12	6.73	4.48	16.5	11.0
	4	4.81	3.20	11.4	7.57	5.66	3.77	13.7	9.12	7.41	4.93	17.4	11.6
	5	5.06	3.37	11.5	7.63	5.97	3.97	13.9	9.23	8.39	5.58	18.6	12.4
	6	5.39	3.58	11.9	7.93	6.38	4.24	14.5	9.64	9.76	6.49	19.9	13.2
	7	5.80	3.86	12.4	8.25	6.89	4.58	15.1	10.1	11.7	7.77	21.4	14.3
	8	6.32	4.20	12.9	8.59	7.53	5.01	15.9	10.6	14.4	9.55	23.2	15.4
	9	6.96	4.63	13.5	8.97	8.33	5.55	16.7	11.1	18.1	12.0	25.3	16.8
	10	7.76	5.16	14.1	9.38	9.33	6.21	17.6	11.7	22.3	14.8	28.2	18.8
	11	8.74	5.81	14.8	9.84	10.6	7.04	18.5	12.3	27.0	18.0	32.3	21.5
	12	9.96	6.63	15.5	10.3	12.1	8.07	19.6	13.1	32.1	21.4	36.4	24.2
	13	11.5	7.65	16.4	10.9	14.1	9.38	20.9	13.9	37.7	25.1	40.5	26.9
	14	13.3	8.88	17.3	11.5	16.4	10.9	22.5	15.0	43.7	29.1	44.6	29.7
	15	15.3	10.2	18.4	12.2	18.8	12.5	25.0	16.6				
	16	17.4	11.6	20.1	13.4	21.4	14.2	27.4	18.2				
	17	19.7	13.1	21.8	14.5	24.1	16.0	29.9	19.9				
	18	22.1	14.7	23.6	15.7	27.0	18.0	32.4	21.6				
	19	24.6	16.3	25.3	16.8	30.1	20.0	34.9	23.2				
	20	27.2	18.1	27.0	18.0	33.4	22.2	37.4	24.9				
	21	30.0	20.0	28.7	19.1	36.8	24.5	39.9	26.5				
	22	32.9	21.9	30.5	20.3	40.4	26.9	42.4	28.2				
Other Constants and Properties													
$b_y \times 10^3$, (kip-ft)$^{-1}$		47.5		31.6		58.4		38.9		106		70.8	
$t_y \times 10^3$, (kips)$^{-1}$		4.39		2.92		5.15		3.42		5.94		3.95	
$t_r \times 10^3$, (kips)$^{-1}$		5.39		3.59		6.32		4.21		7.30		4.87	
r_x/r_y		3.20				3.21				4.74			
r_y, in.		1.36				1.33				0.874			

[c] Shape is slender for compression with F_y = 50 ksi.

Note: Heavy line indicates KL/r_y equal to or greater than 200.

W10

Table 6-1 (continued)
Combined Flexure and Axial Force
W-Shapes

F_y = 50 ksi

Shape		W10×											
		17[c]				15[c]				12[c,f]			
Design		$p \times 10^3$ (kips)$^{-1}$		$b_x \times 10^3$ (kip-ft)$^{-1}$		$p \times 10^3$ (kips)$^{-1}$		$b_x \times 10^3$ (kip-ft)$^{-1}$		$p \times 10^3$ (kips)$^{-1}$		$b_x \times 10^3$ (kip-ft)$^{-1}$	
		ASD	LRFD	ASD	LRFD	ASD	LRFD	ASD	LRFD	ASD	LRFD	ASD	LRFD
Effective length, KL (ft), with respect to least radius of gyration, r_y, or Unbraced Length, L_b (ft), for X-X axis bending	0	6.77	4.50	19.1	12.7	7.77	5.17	22.3	14.8	10.3	6.87	28.5	19.0
	1	6.85	4.56	19.1	12.7	7.87	5.24	22.3	14.8	10.5	6.96	28.5	19.0
	2	7.11	4.73	19.1	12.7	8.19	5.45	22.3	14.8	10.9	7.24	28.5	19.0
	3	7.64	5.09	19.1	12.7	8.76	5.83	22.5	15.0	11.6	7.74	28.8	19.1
	4	8.47	5.64	20.4	13.6	9.79	6.51	24.2	16.1	12.8	8.52	31.1	20.7
	5	9.68	6.44	21.9	14.5	11.3	7.53	26.1	17.4	14.6	9.73	33.9	22.6
	6	11.4	7.57	23.6	15.7	13.5	8.98	28.4	18.9	17.5	11.6	37.3	24.8
	7	13.8	9.17	25.6	17.0	16.6	11.1	31.2	20.7	21.8	14.5	41.3	27.5
	8	17.2	11.4	28.0	18.6	21.2	14.1	34.5	22.9	28.1	18.7	46.4	30.9
	9	21.8	14.5	30.9	20.6	26.8	17.8	39.6	26.4	35.6	23.7	56.5	37.6
	10	26.9	17.9	36.0	23.9	33.1	22.0	46.8	31.1	43.9	29.2	67.2	44.7
	11	32.5	21.6	41.4	27.5	40.1	26.7	54.0	35.9	53.1	35.4	78.3	52.1
	12	38.7	25.8	46.8	31.2	47.7	31.7	61.4	40.9	63.2	42.1	89.6	59.6
	13	45.4	30.2	52.3	34.8	56.0	37.2	68.8	45.8	74.2	49.4	101	67.3
	14	52.7	35.1	57.8	38.5								

Other Constants and Properties								
$b_y \times 10^3$, (kip-ft)$^{-1}$	127	84.7	155	103	207	138
$t_y \times 10^3$, (kips)$^{-1}$	6.69	4.45	7.57	5.04	9.44	6.28
$t_r \times 10^3$, (kips)$^{-1}$	8.22	5.48	9.30	6.20	11.6	7.73
r_x/r_y	4.79		4.88		4.97	
r_y, in.	0.845		0.810		0.785	

[c] Shape is slender for compression with F_y = 50 ksi.

[f] Shape does not meet compact limit for flexure with F_y = 50 ksi.

Note: Heavy line indicates KL/r_y equal to or greater than 200.

F_y = 50 ksi

Table 6-1 (continued)
Combined Flexure and Axial Force
W-Shapes

Shape		W8×											
		67				58				48			
Design		$p \times 10^3$ (kips)$^{-1}$		$b_x \times 10^3$ (kip-ft)$^{-1}$		$p \times 10^3$ (kips)$^{-1}$		$b_x \times 10^3$ (kip-ft)$^{-1}$		$p \times 10^3$ (kips)$^{-1}$		$b_x \times 10^3$ (kip-ft)$^{-1}$	
		ASD	LRFD	ASD	LRFD	ASD	LRFD	ASD	LRFD	ASD	LRFD	ASD	LRFD
Effective length, KL (ft), with respect to least radius of gyration, r_y, or Unbraced Length, L_b (ft), for X-X axis bending	0	1.70	1.13	5.08	3.38	1.95	1.30	5.96	3.96	2.37	1.58	7.27	4.84
	6	1.84	1.23	5.08	3.38	2.13	1.42	5.96	3.96	2.59	1.72	7.27	4.84
	7	1.90	1.27	5.08	3.38	2.20	1.46	5.96	3.96	2.67	1.78	7.27	4.84
	8	1.97	1.31	5.11	3.40	2.28	1.51	6.00	3.99	2.77	1.84	7.34	4.88
	9	2.05	1.36	5.16	3.43	2.37	1.58	6.07	4.04	2.88	1.92	7.44	4.95
	10	2.14	1.43	5.21	3.47	2.48	1.65	6.14	4.08	3.02	2.01	7.55	5.02
	11	2.25	1.50	5.27	3.50	2.61	1.73	6.21	4.13	3.18	2.12	7.65	5.09
	12	2.38	1.58	5.32	3.54	2.75	1.83	6.29	4.18	3.36	2.24	7.77	5.17
	13	2.52	1.68	5.38	3.58	2.92	1.95	6.36	4.23	3.57	2.38	7.88	5.24
	14	2.68	1.79	5.43	3.61	3.12	2.08	6.44	4.29	3.82	2.54	8.00	5.32
	15	2.87	1.91	5.49	3.65	3.34	2.22	6.52	4.34	4.10	2.73	8.12	5.41
	16	3.09	2.05	5.55	3.69	3.60	2.39	6.61	4.40	4.42	2.94	8.25	5.49
	17	3.34	2.22	5.61	3.73	3.89	2.59	6.69	4.45	4.79	3.18	8.38	5.58
	18	3.62	2.41	5.67	3.77	4.23	2.82	6.78	4.51	5.21	3.47	8.52	5.67
	19	3.95	2.63	5.74	3.82	4.62	3.08	6.87	4.57	5.70	3.79	8.66	5.76
	20	4.33	2.88	5.80	3.86	5.08	3.38	6.96	4.63	6.28	4.18	8.80	5.85
	22	5.24	3.48	5.93	3.95	6.15	4.09	7.15	4.76	7.60	5.06	9.10	6.06
	24	6.23	4.15	6.07	4.04	7.32	4.87	7.35	4.89	9.05	6.02	9.43	6.27
	26	7.31	4.87	6.22	4.14	8.59	5.71	7.57	5.03	10.6	7.06	9.77	6.50
	28	8.48	5.64	6.38	4.24	9.96	6.63	7.79	5.19	12.3	8.19	10.1	6.75
	30	9.74	6.48	6.54	4.35	11.4	7.61	8.03	5.35	14.1	9.40	10.6	7.02
	32	11.1	7.37	6.71	4.46	13.0	8.66	8.29	5.52	16.1	10.7	11.0	7.31
	34	12.5	8.32	6.89	4.58	14.7	9.77	8.56	5.70	18.2	12.1	11.5	7.63

Other Constants and Properties						
$b_y \times 10^3$, (kip-ft)$^{-1}$	10.9	7.25	12.8	8.50	15.6	10.4
$t_y \times 10^3$, (kips)$^{-1}$	1.70	1.13	1.95	1.30	2.37	1.58
$t_r \times 10^3$, (kips)$^{-1}$	2.08	1.39	2.40	1.60	2.91	1.94
r_x/r_y	1.75		1.74		1.74	
r_y, in.	2.12		2.10		2.08	

Note: Heavy line indicates KL/r_y equal to or greater than 200.

W8

Table 6-1 (continued)
Combined Flexure and Axial Force
W-Shapes

F_y = 50 ksi

Shape		W8×							
		40				35			
Design		$p \times 10^3$ (kips)$^{-1}$		$b_x \times 10^3$ (kip-ft)$^{-1}$		$p \times 10^3$ (kips)$^{-1}$		$b_x \times 10^3$ (kip-ft)$^{-1}$	
		ASD	LRFD	ASD	LRFD	ASD	LRFD	ASD	LRFD
Effective length, KL (ft), with respect to least radius of gyration, r_y, or Unbraced Length, L_b (ft), for X-X axis bending	0	2.85	1.90	8.95	5.96	3.24	2.16	10.3	6.83
	6	3.13	2.08	8.95	5.96	3.56	2.37	10.3	6.83
	7	3.23	2.15	8.95	5.96	3.68	2.45	10.3	6.83
	8	3.36	2.23	9.07	6.03	3.82	2.54	10.4	6.94
	9	3.50	2.33	9.22	6.14	3.99	2.65	10.6	7.07
	10	3.68	2.45	9.38	6.24	4.19	2.79	10.8	7.21
	11	3.88	2.58	9.55	6.35	4.42	2.94	11.1	7.36
	12	4.11	2.73	9.72	6.47	4.68	3.12	11.3	7.51
	13	4.38	2.91	9.90	6.59	4.99	3.32	11.5	7.67
	14	4.69	3.12	10.1	6.71	5.35	3.56	11.8	7.83
	15	5.04	3.36	10.3	6.84	5.76	3.83	12.0	8.00
	16	5.46	3.63	10.5	6.97	6.24	4.15	12.3	8.18
	17	5.93	3.95	10.7	7.11	6.79	4.51	12.6	8.37
	18	6.48	4.31	10.9	7.25	7.42	4.94	12.9	8.56
	19	7.12	4.73	11.1	7.40	8.16	5.43	13.2	8.77
	20	7.87	5.24	11.4	7.55	9.03	6.01	13.5	8.99
	22	9.52	6.34	11.8	7.88	10.9	7.27	14.2	9.45
	24	11.3	7.54	12.4	8.24	13.0	8.65	15.0	9.97
	26	13.3	8.85	13.0	8.64	15.3	10.2	15.8	10.5
	28	15.4	10.3	13.6	9.07	17.7	11.8	17.0	11.3
	30	17.7	11.8	14.4	9.57	20.3	13.5	18.4	12.3
	32	20.1	13.4	15.4	10.3	23.1	15.4	19.8	13.2
	34	22.7	15.1	16.5	11.0				
Other Constants and Properties									
$b_y \times 10^3$, (kip-ft)$^{-1}$		19.3		12.8		22.1		14.7	
$t_y \times 10^3$, (kips)$^{-1}$		2.85		1.90		3.24		2.16	
$t_r \times 10^3$, (kips)$^{-1}$		3.51		2.34		3.98		2.66	
r_x/r_y		1.73				1.73			
r_y, in.		2.04				2.03			

Note: Heavy line indicates KL/r_y equal to or greater than 200.

Table 6-1 (continued)
Combined Flexure and Axial Force
W-Shapes

F_y = 50 ksi

Shape		W8×							
		31[1]				28			
Design		$p \times 10^3$ (kips)$^{-1}$		$b_x \times 10^3$ (kip-ft)$^{-1}$		$p \times 10^3$ (kips)$^{-1}$		$b_x \times 10^3$ (kip-ft)$^{-1}$	
		ASD	LRFD	ASD	LRFD	ASD	LRFD	ASD	LRFD
Effective length, KL (ft), with respect to least radius of gyration, r_y, or Unbraced Length, L_b (ft), for X-X axis bending	0	3.66	2.43	11.7	7.80	4.05	2.69	13.1	8.71
	6	4.01	2.67	11.7	7.80	4.68	3.11	13.2	8.77
	7	4.15	2.76	11.7	7.80	4.93	3.28	13.5	9.00
	8	4.32	2.87	11.9	7.94	5.23	3.48	13.9	9.23
	9	4.51	3.00	12.2	8.11	5.60	3.73	14.2	9.48
	10	4.74	3.15	12.5	8.29	6.05	4.02	14.6	9.74
	11	5.00	3.33	12.7	8.48	6.58	4.38	15.0	10.0
	12	5.30	3.53	13.0	8.67	7.21	4.80	15.5	10.3
	13	5.66	3.76	13.3	8.88	7.98	5.31	15.9	10.6
	14	6.07	4.04	13.7	9.09	8.89	5.91	16.4	10.9
	15	6.54	4.35	14.0	9.32	9.98	6.64	17.0	11.3
	16	7.06	4.71	14.4	9.56	11.3	7.54	17.5	11.7
	17	7.71	5.13	14.7	9.81	12.8	8.51	18.1	12.0
	18	8.44	5.62	15.1	10.1	14.3	9.54	18.7	12.5
	19	9.29	6.18	15.6	10.3	16.0	10.6	19.4	12.9
	20	10.3	6.84	16.0	10.6	17.7	11.8	20.2	13.4
	22	12.4	8.28	17.0	11.3	21.4	14.2	22.1	14.7
	24	14.8	9.86	18.0	12.0	25.5	17.0	24.5	16.3
	26	17.4	11.6	19.6	13.1	29.9	19.9	26.9	17.9
	28	20.2	13.4	21.4	14.3				
	30	23.1	15.4	23.3	15.5				
	32	26.3	17.5	25.1	16.7				

Other Constants and Properties				
$b_y \times 10^3$, (kip-ft)$^{-1}$	25.3	16.8	35.3	23.5
$t_y \times 10^3$, (kips)$^{-1}$	3.66	2.43	4.05	2.69
$t_r \times 10^3$, (kips)$^{-1}$	4.49	3.00	4.97	3.32
r_x/r_y	1.72		2.13	
r_y, in.	2.02		1.62	

[1] Shape does not meet compact limit for flexure with F_y = 50 ksi.

Note: Heavy line indicates KL/r_y equal to or greater than 200.

W8

Table 6-1 (continued)
Combined Flexure and Axial Force
W-Shapes

F_y = 50 ksi

Shape		W8×											
		24				21				18			
Design		$p \times 10^3$ (kips)$^{-1}$		$b_x \times 10^3$ (kip-ft)$^{-1}$		$p \times 10^3$ (kips)$^{-1}$		$b_x \times 10^3$ (kip-ft)$^{-1}$		$p \times 10^3$ (kips)$^{-1}$		$b_x \times 10^3$ (kip-ft)$^{-1}$	
		ASD	LRFD	ASD	LRFD	ASD	LRFD	ASD	LRFD	ASD	LRFD	ASD	LRFD
Effective length, KL (ft), with respect to least radius of gyration, r_y, or Unbraced Length, L_b (ft), for X-X axis bending	0	4.72	3.14	15.4	10.3	5.42	3.61	17.5	11.6	6.35	4.22	21.0	13.9
	1	4.74	3.15	15.4	10.3	5.46	3.63	17.5	11.6	6.39	4.25	21.0	13.9
	2	4.79	3.19	15.4	10.3	5.57	3.70	17.5	11.6	6.53	4.34	21.0	13.9
	3	4.89	3.26	15.4	10.3	5.76	3.83	17.5	11.6	6.76	4.50	21.0	13.9
	4	5.03	3.35	15.4	10.3	6.03	4.01	17.5	11.6	7.10	4.72	21.0	13.9
	5	5.22	3.47	15.4	10.3	6.40	4.26	17.8	11.9	7.56	5.03	21.5	14.3
	6	5.46	3.63	15.6	10.4	6.88	4.58	18.5	12.3	8.16	5.43	22.5	15.0
	7	5.76	3.83	16.0	10.6	7.50	4.99	19.2	12.8	8.93	5.94	23.5	15.6
	8	6.12	4.07	16.5	11.0	8.29	5.51	20.0	13.3	9.91	6.60	24.6	16.4
	9	6.56	4.36	17.0	11.3	9.28	6.17	20.9	13.9	11.2	7.42	25.9	17.2
	10	7.08	4.71	17.5	11.7	10.5	7.00	21.9	14.5	12.7	8.47	27.3	18.1
	11	7.71	5.13	18.1	12.0	12.1	8.05	22.9	15.2	14.7	9.81	28.8	19.2
	12	8.47	5.63	18.7	12.4	14.1	9.39	24.1	16.0	17.3	11.5	30.5	20.3
	13	9.37	6.24	19.3	12.9	16.6	11.0	25.3	16.8	20.3	13.5	32.5	21.6
	14	10.5	6.96	20.0	13.3	19.2	12.8	26.7	17.8	23.6	15.7	35.3	23.5
	15	11.8	7.83	20.8	13.8	22.0	14.7	28.5	18.9	27.1	18.0	38.8	25.8
	16	13.4	8.89	21.6	14.4	25.1	16.7	30.9	20.6	30.8	20.5	42.4	28.2
	17	15.1	10.0	22.5	14.9	28.3	18.8	33.4	22.2	34.8	23.1	45.9	30.5
	18	16.9	11.3	23.4	15.6	31.7	21.1	35.9	23.9	39.0	26.0	49.4	32.9
	19	18.8	12.5	24.5	16.3	35.4	23.5	38.3	25.5	43.5	28.9	52.9	35.2
	20	20.9	13.9	26.1	17.4	39.2	26.1	40.7	27.1	48.2	32.0	56.4	37.5
	21	23.0	15.3	27.8	18.5	43.2	28.7	43.2	28.7				
	22	25.3	16.8	29.4	19.6								
	23	27.6	18.4	31.0	20.6								
	24	30.1	20.0	32.6	21.7								
	25	32.6	21.7	34.2	22.8								
Other Constants and Properties													
$b_y \times 10^3$, (kip-ft)$^{-1}$		41.6		27.7		62.6		41.7		76.5		50.9	
$t_y \times 10^3$, (kips)$^{-1}$		4.72		3.14		5.42		3.61		6.35		4.22	
$t_r \times 10^3$, (kips)$^{-1}$		5.79		3.86		6.66		4.44		7.80		5.20	
r_x/r_y		2.12				2.77				2.79			
r_y, in.		1.61				1.26				1.23			

Note: Heavy line indicates KL/r_y equal to or greater than 200.

F_y = 50 ksi

Table 6-1 (continued)
Combined Flexure and Axial Force
W-Shapes

W8

Shape		W8×											
		15				13				10[c,f]			
Design		$p \times 10^3$ (kips)$^{-1}$		$b_x \times 10^3$ (kip-ft)$^{-1}$		$p \times 10^3$ (kips)$^{-1}$		$b_x \times 10^3$ (kip-ft)$^{-1}$		$p \times 10^3$ (kips)$^{-1}$		$b_x \times 10^3$ (kip-ft)$^{-1}$	
		ASD	LRFD	ASD	LRFD	ASD	LRFD	ASD	LRFD	ASD	LRFD	ASD	LRFD
Effective length, KL (ft), with respect to least radius of gyration, r_y, or Unbraced Length, L_b (ft), for X-X axis bending	0	7.52	5.01	26.2	17.4	8.70	5.79	31.3	20.8	11.7	7.78	40.6	27.0
	1	7.63	5.07	26.2	17.4	8.83	5.87	31.3	20.8	11.8	7.88	40.6	27.0
	2	7.95	5.29	26.2	17.4	9.23	6.14	31.3	20.8	12.3	8.18	40.6	27.0
	3	8.51	5.66	26.2	17.4	9.94	6.61	31.3	20.8	13.1	8.71	40.6	27.0
	4	9.37	6.23	27.6	18.4	11.0	7.34	33.4	22.2	14.3	9.55	43.2	28.8
	5	10.6	7.05	29.4	19.5	12.6	8.38	35.7	23.8	16.4	10.9	46.7	31.1
	6	12.3	8.20	31.3	20.8	14.8	9.86	38.5	25.6	19.3	12.8	50.8	33.8
	7	14.7	9.80	33.6	22.4	18.0	12.0	41.7	27.7	23.4	15.6	55.7	37.0
	8	18.1	12.0	36.2	24.1	22.5	14.9	45.4	30.2	29.3	19.5	61.6	41.0
	9	22.8	15.2	39.3	26.1	28.4	18.9	50.0	33.2	37.1	24.7	71.3	47.4
	10	28.1	18.7	42.9	28.6	35.1	23.4	57.4	38.2	45.8	30.4	84.3	56.1
	11	34.0	22.6	48.9	32.5	42.5	28.3	65.8	43.8	55.4	36.8	97.6	64.9
	12	40.5	26.9	54.9	36.5	50.6	33.6	74.3	49.4	65.9	43.8	111	73.9
	13	47.5	31.6	60.9	40.5	59.3	39.5	82.7	55.0	77.3	51.5	125	83.0
	14	55.1	36.7	66.9	44.5	68.8	45.8	91.2	60.7	89.7	59.7	139	92.2

Other Constants and Properties						
$b_y \times 10^3$, (kip-ft)$^{-1}$	133	88.8	166	110	218	145
$t_y \times 10^3$, (kips)$^{-1}$	7.52	5.01	8.70	5.79	11.3	7.51
$t_r \times 10^3$, (kips)$^{-1}$	9.24	6.16	10.7	7.12	13.9	9.24
r_x/r_y	3.76		3.81		3.83	
r_y, in.	0.876		0.843		0.841	

[c] Shape is slender for compression with F_y = 50 ksi.

[f] Shape does not meet compact limit for flexure with F_y = 50 ksi.

Note: Heavy line indicates KL/r_y equal to or greater than 200.

PART 7

DESIGN CONSIDERATIONS FOR BOLTS

SCOPE 7–3
GENERAL REQUIREMENTS FOR BOLTED JOINTS 7–3
Fastener Components 7–3
Proper Selection of Bolt Length 7–3
Washer Requirements 7–4
Nut Requirements 7–4
Bolted Parts 7–4
PROPER SPECIFICATION OF JOINT TYPE 7–4
Snug-Tightened Joints 7–4
Pretensioned Joints 7–5
Slip-Critical Joints 7–5
DESIGN REQUIREMENTS 7–5
Shear 7–5
Tension 7–6
Combined Shear and Tension 7–6
Bearing Strength at Bolt Holes 7–6
Slip Resistance 7–6
ECCENTRICALLY LOADED BOLT GROUPS 7–6
Eccentricity in the Plane of the Faying Surface 7–6
Instantaneous Center of Rotation Method 7–6
Elastic Method 7–8
Eccentricity Normal to the Plane of the Faying Surface 7–10
Case I—Neutral Axis Not at Center of Gravity 7–10
Case II—Neutral Axis at Center of Gravity 7–12
SPECIAL CONSIDERATIONS FOR HOLLOW STRUCTURAL SECTIONS 7–13
Through-Bolting to HSS 7–13
Blind Bolts 7–13
Flow-Drilling 7–13
Threaded Studs to HSS 7–14
Nailing to HSS 7–15

Screwing to HSS 7–15
Connection Shear per Screw 7–15
OTHER SPECIFICATION REQUIREMENTS AND DESIGN CONSIDERATIONS 7–16
Placement of Bolt Groups 7–16
Bolts in Combination with Welds or Rivets 7–16
Galvanizing High-Strength Bolts and Nuts 7–16
Reuse of Bolts 7–16
Fatigue Applications 7–16
Entering and Tightening Clearances 7–17
Fully Threaded ASTM A325 Bolts 7–17
ASTM A307 Bolts 7–17
ASTM A449 Bolts 7–17
DESIGN TABLE DISCUSSION 7–17
PART 7 REFERENCES 7–21
DESIGN TABLES 7–22
Table 7-1. Available Shear Strength of Bolts 7–22
Table 7-2. Available Tensile Strength of Bolts 7–23
Table 7-3. Slip-Critical Connections, Available Shear Strength 7–24
Tables 7-4 and 7-5. Available Bearing Strength at Bolt Holes 7–26
Tables 7-6 through 7-13. Coefficients *C* for Eccentrically Loaded Bolt Groups ... 7–30
Table 7-14. Dimensions of High-Strength Fasteners 7–78
Tables 7-15 and 7-16. Entering and Tightening Clearance 7–79
Table 7-17. Threading Dimensions for High-Strength and Non-High-Strength Bolts 7–81
Table 7-18. Weights of High-Strength Fasteners 7–82
Table 7-19. Dimensions of Non-High-Strength Fasteners 7–83
Tables 7-20, 7-21 and 7-22. Weights of Non-High-Strength Fasteners 7–85

SCOPE

The specification requirements and other design considerations summarized in this Part apply to the design of bolts in steel-to-steel structural connections. Additional guidance on bolt design is available in AISC Design Guide 17, *High Strength Bolts—A Primer for Structural Engineers,* (Kulak, 2002). For the design of steel-to-concrete anchorage, see Part 14. For the design of connection elements, see Part 9. For the design of simple shear, moment, bracing and other connections, see Parts 10 through 15.

GENERAL REQUIREMENTS FOR BOLTED JOINTS

Fastener Components

The applicable material specifications for fastener components are as given in Part 2. For convenience in referencing and consistent with AISC *Specification* Section J3.1, ASTM A325 and F1852 bolts have been labelled Group A bolts, and ASTM A490 and F2280 bolts have been labelled Group B bolts.

Material and storage requirements for fastener components are as given in AISC *Specification* Section A3.3 and RCSC *Specification* Section 2. The compatibility of ASTM A563 nuts and F436 washers with ASTM A325, F1852, A490 and F2280 bolts is as given in RCSC *Specification* Table 2.1. These products are given identifying marks, as illustrated in RCSC *Specification* Figure C-2.1. Alternative-design fasteners and alternative washer-type indicating devices are permitted, subject to the requirements in RCSC *Specification* Sections 2.8 and 2.6.2, respectively.

Mixing grades of fasteners raises inventory and quality control issues associated with the use of multiple fastener grades. When both Group A and Group B bolts are used on a project, different diameters can be specified for each to help ensure that the Group B bolts are installed in the proper location.

Regardless of the bolt type selected, the typical sizes of $^3/_4$-in., $^7/_8$-in., 1-in. and $1^1/_8$-in. diameter are usually preferred. Diameters above 1 in. require special consideration for availability as well as installation, when pretensioned installation is required. Special equipment may be required to pretension large-diameter Group B bolts.

Proper Selection of Bolt Length

Per RCSC *Specification* Section 2.3.2, adequate thread engagement is developed when the end of the bolt is at least flush with or projects beyond the face of the nut. To provide for this, the ordered length of Group A and Group B bolts should be calculated as the grip (see Figure 7-1) plus the nominal thickness of washers and/or direct-tension indicators, if used, plus the allowance from Table 7-14, with the total rounded to the next higher increment of $^1/_4$ in. up to a 5-in. length and the next higher $^1/_2$ in. over a 5-in. length. Note that bolts longer than 5 in. are generally available only in $^1/_2$-in. increments, except by special arrangement with the manufacturer or vendor. While longer lengths may be ordered, an 8-in. length is generally the maximum stock length available. Requirements for a minimum stick-through greater than zero are discouraged because of the risk of jamming the nut on the thread runout, particularly in the bolt length range available only in $^1/_2$-in. increments. See Carter (1996) for further information.

Washer Requirements

Requirements for the use of ASTM F436 washers and/or plate washers are given in RCSC *Specification* Section 6.

Nut Requirements

The compatibility of ASTM A563 nuts with Group A and Group B bolts is as given in RCSC *Specification* Table 2.1.

Bolted Parts

The requirements for connected plies, faying surfaces, bolt holes and burrs are given in AISC *Specification* Sections J3.2 and M2.5, and RCSC *Specification* Section 3. Spacing and edge distance requirements are given in AISC *Specification* Sections J3.3, J3.4 and J3.5.

PROPER SPECIFICATION OF JOINT TYPE

When Group A or Group B high-strength bolts are to be used, the joint type must be specified as snug-tightened, pretensioned or slip-critical, per AISC *Specification* Section J3.1.

Snug-Tightened Joints

Snug-tightened joints simplify design, installation and inspection and should be specified whenever pretensioned joints and slip-critical joints are not required. The applicability is summarized and design requirements, installation requirements and inspection requirements are stipulated for snug-tightened joints per RCSC *Specification* Section 4.1. Faying surfaces in snug-tightened joints must meet the requirements in RCSC *Specification* Sections 3.2 and 3.2.1, but not those for slip-critical joints in RCSC *Specification* Section 3.2.2. Note that there is generally no need to limit the actual level of pretension provided in snug-tightened joints, per RCSC *Specification* Section 9.1.

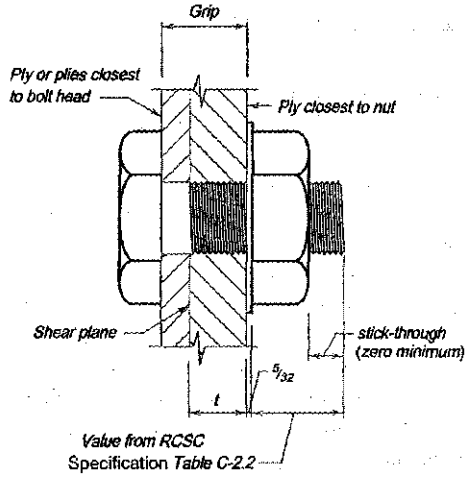

Fig. 7-1. Grip and other parameters for bolt length selection.

Pretensioned Joints

When pretension is required but slip-resistance is not of concern, a pretensioned joint should be specified. The applicability is summarized and design requirements, installation requirements and inspection requirements are stipulated for pretensioned joints per RCSC *Specification* Section 4.2. Additionally, pretensioned joints are required by default in some cases per AISC *Specification* Section J1.10. Faying surfaces in pretensioned joints must meet the requirements in RCSC *Specification* Sections 3.2 and 3.2.1, but not those for slip-critical joints in RCSC *Specification* Section 3.2.2.

Slip-Critical Joints

The applicability of slip critical joints is summarized and design requirements, installation requirements, and inspection requirements are stipulated in RCSC *Specification* Section 4.3, except as modified by AISC *Specification* Sections J3.8 and J3.9. Faying surfaces in slip-critical joints must meet the requirements in RCSC *Specification* Sections 3.2 and 3.2.2. RCSC defines a faying surface as "the plane of contact between two plies of a joint." Note that the surfaces under the bolt head, washer and/or nut are not faying surfaces.

Subject to the requirements in RCSC *Specification* Section 4.3, slip-critical joints are rarely required in building design. Slip-critical joints are appreciably more expensive because of the associated costs of faying surface preparation and installation and inspection requirements.

When slip-resistance is required and the steel is painted, the fabricator should be consulted to determine the most economical approach to providing the necessary slip resistance. Special paint systems that are rated for slip resistance can be specified. Alternatively, a paint system that is not rated for slip resistance can be used with the faying surfaces masked.

DESIGN REQUIREMENTS

Design requirements are found in the AISC *Specification* as follows. In each case, the available strength determined in accordance with these provisions must equal or exceed the required strength. These requirements are derived from those in the RCSC *Specification*.

Shear

Available shear strength is determined as given in RCSC *Specification* Section 5.1 and AISC *Specification* Section J3.6, with consideration of the presence of fillers or shims, per RCSC *Specification* Section 5.1 and AISC *Specification* Section J5. The nominal shear strengths given in Table J3.2 have been reduced by approximately 10% from statistical results of tests to account for uneven force distributions associated with end loading and other effects normally neglected in the design process.

When the length of a bolted joint measured parallel to the line of force exceeds 38 in., a 16.7% strength reduction may be applicable, per AISC *Specification* Table J3.2 footnote a.

The force that can be resisted by a snug-tightened or pretensioned high-strength bolt may also be limited by the bearing strength at the bolt hole per AISC *Specification* Section J3.10. The effective strength of an individual bolt may be taken as the lesser of the shear strength per Section J3.6 or the bearing strength at the bolt hole per Section J3.10. The strength of the bolt group may be taken as the sum of the effective strengths of the individual fasteners.

Tension

Available tensile strength is determined as given in RCSC *Specification* Section 5.1 and AISC *Specification* Section J3.6, with consideration of the effects of prying action, if any. Prying action is a phenomenon (in bolted construction only) whereby the deformation of a fitting under a tensile force increases the tensile force in the bolt. While the effect of prying action is relevant to the design of the bolts, it is primarily a function of the strength and stiffness of the connection elements. Prying action is addressed in Part 9.

Combined Shear and Tension

Available strength for combined shear and tension in bearing-type connections is determined as given in RCSC *Specification* Section 5.2 and AISC *Specification* Section J3.7.

Bearing Strength at Bolt Holes

Available bearing strength at bolt holes is determined as given in RCSC *Specification* Section 5.3 and AISC *Specification* Section J3.10.

Slip Resistance

The available strength of slip-critical connections is determined in accordance with AISC *Specification* Section J3.8. The available strength, ϕR_n or R_n/Ω, is determined by applying the resistance factor or safety factor appropriate for the hole type used.

ECCENTRICALLY LOADED BOLT GROUPS

Eccentricity in the Plane of the Faying Surface

When eccentricity occurs in the plane of the faying surface, the bolts must be designed to resist the combined effect of the direct shear, P_u or P_a, and the additional shear from the induced moment, $P_u e$ or $P_a e$. Two analysis methods for this type of eccentricity are the instantaneous center of rotation method and the elastic method.

The instantaneous center of rotation method is more accurate, but generally requires the use of tabulated values or an iterative solution. The elastic method is simplified, but may be excessively conservative because it neglects the ductility of the bolt group and the potential for load redistribution.

Instantaneous Center of Rotation Method

Eccentricity produces both a rotation and a translation of one connection element with respect to the other. The combined effect of this rotation and translation is equivalent to a rotation about a point defined as the instantaneous center of rotation (IC), as illustrated in Figure 7-2(a). The location of the IC depends upon the geometry of the bolt group as well as the direction and point of application of the load.

The load-deformation relationship for one bolt is illustrated in Figure 7-3, where

$$R = R_{ult}(1 - e^{-10\Delta})^{0.55} \tag{7-1}$$

where

R = nominal shear strength of one bolt at a deformation Δ, kips

R_{ult} = ultimate shear strength of one bolt, kips

Δ = total deformation, including shear, bearing and bending deformation in the bolt and bearing deformation of the connection elements, in.

e = 2.718..., base of the natural logarithm

The nominal shear strength of the bolt most remote from the IC can be determined by applying a maximum deformation, Δ_{max}, to that bolt. The load-deformation relationship is based upon data obtained experimentally for $^3/_4$-in.-diameter ASTM A325 bolts, where $R_{ult} = 74$ kips, and $\Delta_{max} = 0.34$ in.

The nominal shear strengths of the other bolts in the joint can be determined by applying a deformation Δ that varies linearly with distance from the IC. The nominal shear strength of the bolt group is, then, the sum of the individual strengths of all bolts.

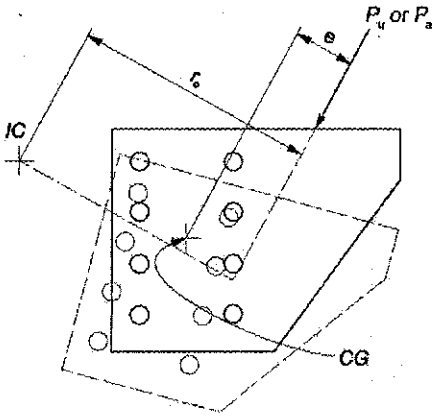

(a) Instantaneous center of rotation (IC)

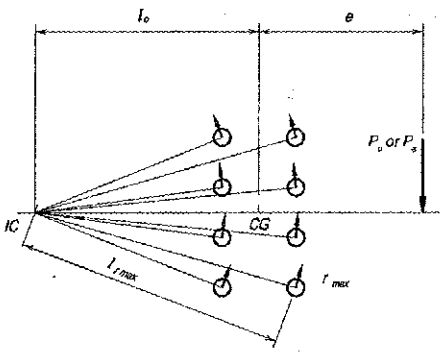

(b) Forces on bolts in group for case of $\theta = 0°$ for simplicity

Fig. 7-2. Illustration for instantaneous center of rotation method.

The individual resistance of each bolt is assumed to act on a line perpendicular to a ray passing through the IC and the centroid of that bolt, as illustrated in Figure 7-2(b). If the correct location of the IC has been selected, the three equations of in-plane static equilibrium ($\Sigma F_x = 0$, $\Sigma F_y = 0$, and $\Sigma M = 0$) will be satisfied.

For further information, see Crawford and Kulak (1968).

Elastic Method

For a force applied as illustrated in Figure 7-4, the eccentric force, P_u or P_a, is resolved into a direct shear, P_u or P_a, acting through the center of gravity (CG) of the bolt group and a moment, $P_u e$ or $P_a e$, where e is the eccentricity. Each bolt is then assumed to resist an equal share of the direct shear and a share of the eccentric moment proportional to its distance from the CG. The resultant vectorial sum of these forces is the required strength for the bolt, r_u or r_a.

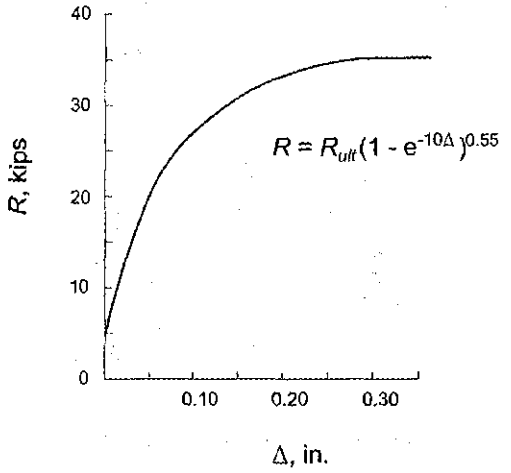

Fig. 7-3. Load-deformation relationship for one 3/4-in.-diameter ASTM A325 bolt in single shear.

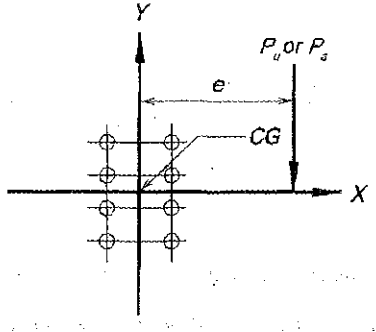

Fig. 7-4. Illustration for elastic method.

The shear per bolt due to the concentric force, P_u or P_a, is r_{pu} or r_{pa}, where

LRFD		ASD	
$r_{pu} = \frac{P_u}{n}$	(7-2a)	$r_{pa} = \frac{P_a}{n}$	(7-2b)

and n is the number of bolts. To determine the resultant forces on each bolt when P_u or P_a is applied at an angle θ with respect to the vertical, r_{pu} or r_{pa} must be resolved into horizontal component, r_{pxu} or r_{pxa}, and vertical component, r_{pyu} or r_{pya}, where

$$r_{pxu} = r_{pu}\sin\theta \text{ (LRFD)} \quad (7\text{-}3a)$$
$$r_{pxa} = r_{pa}\sin\theta \text{ (ASD)} \quad (7\text{-}3b)$$
$$r_{pyu} = r_{pu}\cos\theta \text{ (LRFD)} \quad (7\text{-}4a)$$
$$r_{pya} = r_{pa}\cos\theta \text{ (ASD)} \quad (7\text{-}4b)$$

The shear on the bolt most remote from the CG due to the moment, $P_u e$ or $P_a e$, is r_{mu} or r_{ma}, where

LRFD		ASD	
$r_{mu} = \frac{P_u ec}{I_p}$	(7-5a)	$r_{ma} = \frac{P_a ec}{I_p}$	(7-5b)

where

c = radial distance from CG to center of bolt most remote from CG, in.

$I_p = I_x + I_y$ = polar moment of inertia of the bolt group, in.^{4} per in.^{2}

To determine the resultant force on the most highly stressed bolt, r_{mu} or r_{ma} must be resolved into horizontal component r_{mxu} or r_{mxa} and vertical component r_{myu} or r_{mya}, where

LRFD		ASD	
$r_{mxu} = \frac{P_u ec_y}{I_p}$	(7-6a)	$r_{mxa} = \frac{P_a ec_y}{I_p}$	(7-6b)
$r_{myu} = \frac{P_u ec_x}{I_p}$	(7-7a)	$r_{mya} = \frac{P_a ec_x}{I_p}$	(7-7b)

In the above equations, c_x and c_y are the horizontal and vertical components of the diagonal distance c. Thus, the required strength per bolt is r_u or r_a, where

LRFD		ASD	
$r_u = \sqrt{\left(r_{pxu} + r_{mxu}\right)^2 + \left(r_{pyu} + r_{myu}\right)^2}$	(7-8a)	$r_a = \sqrt{\left(r_{pxa} + r_{mxa}\right)^2 + \left(r_{pya} + r_{mya}\right)^2}$	(7-8b)

For further information, see Higgins (1971).

Eccentricity Normal to the Plane of the Faying Surface

Eccentricity normal to the plane of the faying surface produces tension above and compression below the neutral axis for a bracket connection as shown in Figure 7-5. The eccentric force, P_u or P_a, is resolved into a direct shear, P_u or P_a, acting at the faying surface of the joint and a moment normal to the plane of the faying surface, $P_u e$ or $P_a e$, where e is the eccentricity. Each bolt is then assumed to resist an equal share of the concentric force, P_u or P_a, and the moment is resisted by tension in the bolts above the neutral axis and compression below the neutral axis.

Two design approaches for this type of eccentricity are available: Case I, in which the neutral axis is not taken at the center of gravity (CG), and Case II, in which the neutral axis is taken at the CG.

Case I—Neutral Axis Not at Center of Gravity

The shear per bolt due to the concentric force, r_{uv} or r_{av}, is determined as

LRFD		ASD	
$r_{uv} = \frac{P_u}{n}$	(7-9a)	$r_{av} = \frac{P_a}{n}$	(7-9b)

where n is the number of bolts in the connection.

A trial position for the neutral axis can be selected at one-sixth of the total bracket depth, measured upward from the bottom (line X-X in Figure 7-6(a)). To provide for reasonable proportions and to account for the bending stiffness of the connection elements, the effective width of the compression block, b_{eff}, should be taken as

$$b_{eff} = 8t_f \leq b_f \qquad (7\text{-}10)$$

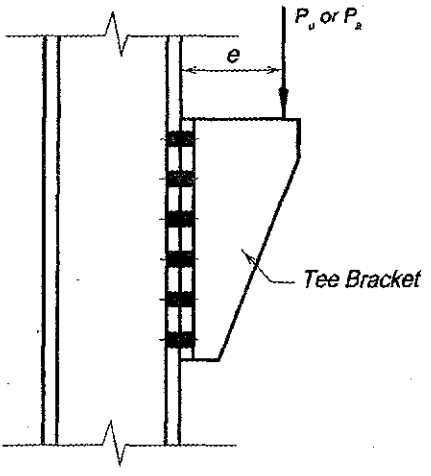

Fig. 7-5. Tee bracket subject to eccentric loading normal to the plane of the faying surface.

where

t_f = lesser connection element thickness, in.

b_f = connection element width, in.

This effective width is valid for bracket flanges made from W-shapes, S-shapes, welded plates and angles. Where the bracket flange thickness is not constant, the average flange thickness should be used.

The assumed location of the neutral axis can be evaluated by checking static equilibrium assuming an elastic stress distribution. Equating the moment of the bolt area above the neutral axis with the moment of the compression block area below the neutral axis,

$$(\Sigma A_b)y = b_{eff}d\,(d/2) \tag{7-11}$$

where

ΣA_b = sum of the areas of all bolts above the neutral axis, in.^{2}

y = distance from line X-X to the CG of the bolt group above the neutral axis, in.

d = depth of compression block, in.

The value of d may then be adjusted until a reasonable equality exists.

Once the neutral axis has been located, the tensile force per bolt, r_{ut} or r_{at}, as illustrated in Figure 7-6(b), may be determined as

LRFD		ASD	
$r_{ut} = \left(\frac{P_u ec}{I_x}\right) A_b$	(7-12a)	$r_{at} = \left(\frac{P_a ec}{I_x}\right) A_b$	(7-12b)

where

c = distance from neutral axis to the most remote bolt in the group, in.

I_x = combined moment of inertia of the bolt group and compression block about the neutral axis, in.^{4}

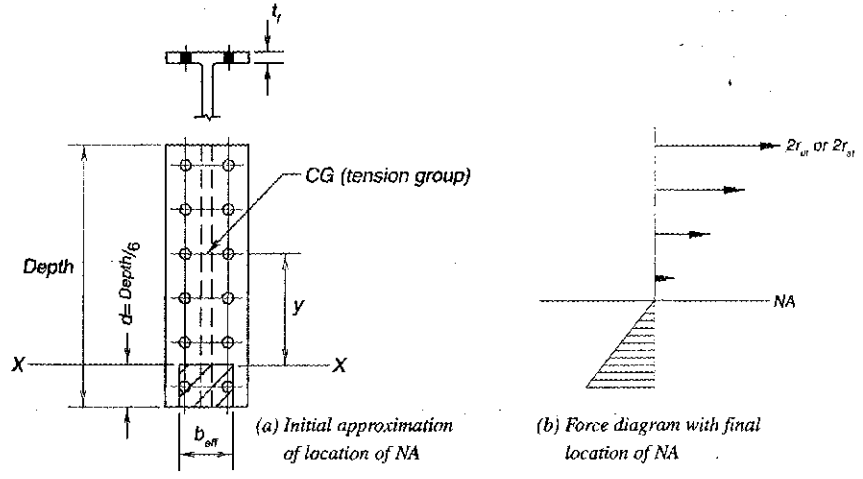

Fig. 7-6. Location of neutral axis (NA) for out-of-plane eccentric loading using Case I.

Bolts above the neutral axis are subjected to the shear force, the tensile force, and the effect of prying action (see Part 9); bolts below the neutral axis are subjected to the shear force, r_{uv} or r_{av}, only.

Case II—Neutral Axis at Center of Gravity

This method provides a more direct, but also a more conservative result. As for Case I, the shear force per bolt, r_{uv} or r_{av}, due to the concentric force, P_u or P_a, is determined as

LRFD		ASD	
$r_{uv} = \frac{P_u}{n}$	(7-13a)	$r_{av} = \frac{P_a}{n}$	(7-13b)

where n is the number of bolts in the connection.

The neutral axis is assumed to be located at the CG of the bolt group as illustrated in Figure 7-7. The bolts above the neutral axis are in tension and the bolts below the neutral axis are said to be in "compression." To obtain a more accurate result, a plastic stress distribution is assumed; this assumption is justified because this method is still more conservative than Case I. Accordingly, the tensile force in each bolt above the neutral axis, r_{ut} or r_{at}, due to the moment, $P_u e$ or $P_a e$, is determined as

LRFD		ASD	
$r_{ut} = \frac{P_u e}{n' d_m}$	(7-14a)	$r_{at} = \frac{P_a e}{n' d_m}$	(7-14b)

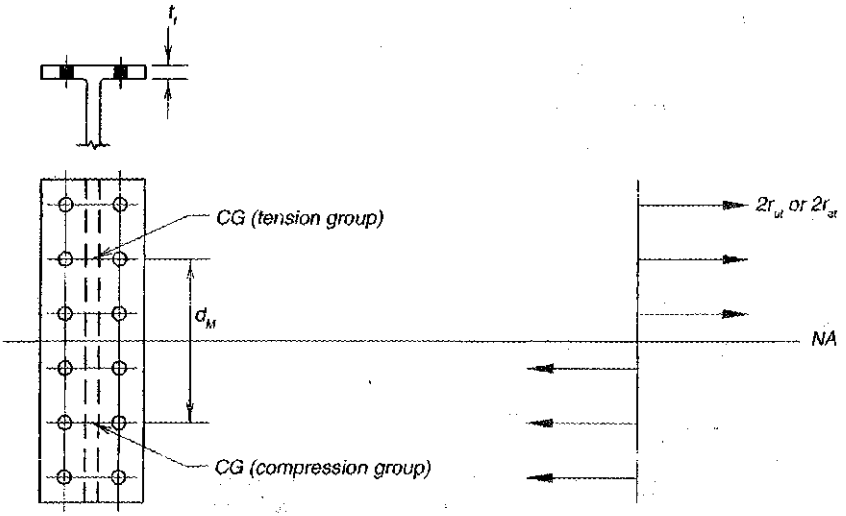

Fig. 7-7. Location of neutral axis (NA) for out-of-plane eccentric loading using Case II.

where

n' = number of bolts above the neutral axis

d_m = moment arm between resultant tensile force and resultant compressive force, in.

Bolts above the neutral axis are subjected to the shear force, the tensile force, and the effect of prying action (see Part 9); bolts below the neutral axis are subjected to the shear force, r_{uv} or r_{av}, only.

SPECIAL CONSIDERATIONS FOR HOLLOW STRUCTURAL SECTIONS

Through-Bolting to HSS

Long bolts that extend through the entire HSS are satisfactory for shear connections that do not require a pretensioned installation. The flexibility of the walls of the HSS precludes installation of pretensioned bolts. Standard structural bolts may be used, although ASTM A449 bolts may be required for longer lengths. The bolts are designed for static shear and the only limit-state involving the HSS is bolt bearing. The available bearing strength is determined as ϕR_n or R_n/Ω, where

$$R_n = 1.8nF_y dt_{design} \qquad (7\text{-}15)$$

$$\phi = 0.75 \qquad \Omega = 2.00$$

where

n = number of fasteners

d = fastener diameter, in.

F_y = specified minimum yield strength of HSS, ksi

t_{design} = design wall thickness of HSS, in.

Blind Bolts

Special fasteners are available that eliminate the need for access to install a nut (Korol et al, 1993; Henderson, 1996). The shank of the fastener is inserted through holes in the parts to be connected until the head bears on the outer ply (see Figure 7-8). In some cases, a special wrench is used on the open side to keep the outer part of the shank from rotating and simultaneously turn the threaded part of the shank. A wedge or other mechanism on the blind side causes the fixed part of the shank to expand and form a contact with the inside of the HSS. Some fasteners contain a break-off mechanism when the fastener is pretensioned. Recent versions of these fasteners meet the requirements for a pretensioned ASTM A325 bolt (Henderson, 1996) and could be used in slip-critical or tension conditions. HSS limit states are bolt bearing in shear, tear-out of the bolt in tension, and wall distortion. Manufacturers' literature must be consulted to determine the available strength of blind bolts.

Flow-Drilling

Flow-drilling is a process that can be used to produce a threaded hole in an HSS to permit blind bolting when the inside of the HSS is inaccessible (Sherman, 1995; Henderson, 1996). The process is to force a hole through the HSS with a carbide conical tool rotating at sufficient speed to produce high rapid heating, which softens the material in a local area. The material

that is displaced as the tool is forced through the plate forms a truncated hollow cone (bushing) on the inner surface and a small upset on the outer surface. Tools can be obtained with a milling collar so that the material on the outer surface is removed, producing a flat surface allowing parts to be brought in close contact. A cold-formed tap is then used to roll a thread into the hole without any chips or removal of material. The resulting threaded hole has the approximate dimensions and hardness of a heavy hex nut. Shear and tension strengths of ASTM A325 bolts can be developed for certain combinations of bolt size and HSS thickness (see Figure 7-9).

Drilling equipment with suitable rotational speed, torque and thrust is required, but with small sizes and thicknesses, field installation with conventional tools is possible. The bolts are designed with the normal criteria and the HSS limit states are bolt bearing in shear and distortion of the HSS wall in tension. HSS strength is not affected by the process except for the reduction in area due to the holes.

Threaded Studs to HSS

Threaded studs are available in $^3/_8$-in. to $^7/_8$-in. diameters and can be shop- or field-welded to an HSS with a stud-welding gun. The connection is similar to a bolted connection with an

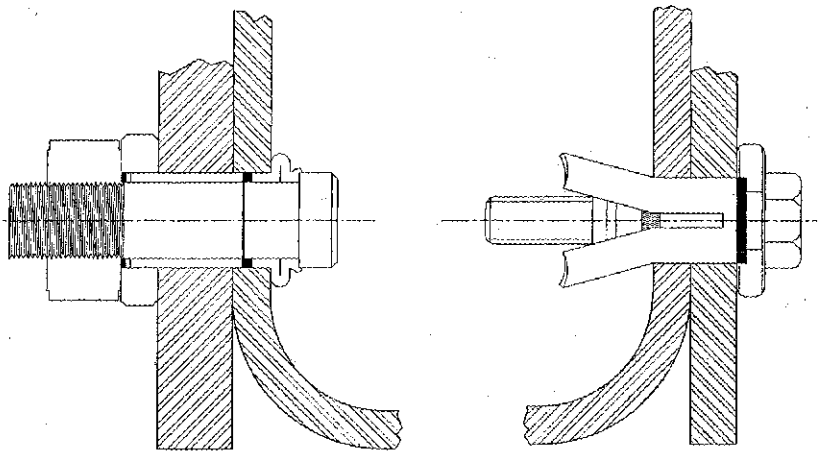

Fig. 7-8. Two types of blind bolts.

HSS Thickness (in.)	BOLT DIAMETER (in.)				
	$^1/_2$	$^5/_8$	$^3/_4$	$^7/_8$	1
$^3/_{16}$	X	X			
$^1/_4$	X	X	X		
$^5/_{16}$		X	X	X	
$^3/_8$			X	X	X
$^1/_2$					X

Fig. 7-9. HSS thickness and bolt diameter combinations.

external nut. The strength of the stud in tension or shear is based on manufacturer's recommendations and tests. The HSS limit state is distortion of the wall. When using threaded studs, countersunk holes must be used in the attached element to clear the weld fillet at the base of the stud.

Nailing to HSS

Power-driven nails that are installed with a power-actuated gun are satisfactory for pure shear connections where the combined thickness of the attachment and the HSS does not exceed ½ in. This system was tested as splices between telescoping round HSS loaded with an axial force (Packer, 1996). The shear resistance of the fasteners is taken as the number of nails times the shear strength of a single nail and ignores any secondary contribution from a dimpling effect between the materials. The limit state for the HSS is shear-bearing. See Packer (1996).

Screwing to HSS

Self-tapping screws with or without self-drilling points are available for connecting materials with combined thicknesses up to ½ in. The screws have diameters from 0.08 in. to 0.25 in. The limit-states for connections in the AISI *North American Specification for the Design of Cold-Formed Steel Structural Members* (AISI, 2007) are associated with bearing failure of the material or pull-out of the screw either in direct tension or after tilting occurs in a shear load. Failure of the screws themselves is prevented by requiring that the product be 25% stronger than the available shear or tension strength of the material. Edge distances and spacing of screws should not be less than 3 times the screw diameter, d. For attaching material with thickness t_1 and ultimate strength F_{u1} to an HSS with thickness t and strength F_u, the available strength, ϕP_n or P_n/Ω, is determined as follows, with $\phi = 0.50$ and $\Omega = 3.00$.

Connection Shear per Screw

For $t/t_1 \le 1$, P_n is the smallest of

$$\left\{\begin{array}{c} 4.2\left(t^3 d\right)^{1/2} F_u \\ 2.7 t_1 d F_{u1} \\ 2.7 t d F_u \end{array}\right\} \tag{7-16}$$

For $t/t_1 \ge 2.5$, P_n is the smaller of

$$\left\{\begin{array}{c} 2.7 t_1 d F_{u1} \\ 2.7 t d F_u \end{array}\right\} \tag{7-17}$$

For $1 < t/t_1 < 2.5$, P_n is determined by linear interpolation between the above two cases..

Connection tension per screw, P_n, is the smaller of

$$\left\{\begin{array}{c} 0.85 t_c d F_u \\ 1.5 t_1 d_w F_{u1} \end{array}\right\} \tag{7-18}$$

where

t_c = lesser of the depth of penetration and the HSS thickness, in.

d_w = larger of the screw head or washer diameter, and shall not be taken larger than $\frac{1}{2}$ in., in.

OTHER SPECIFICATION REQUIREMENTS AND DESIGN CONSIDERATIONS

The following other specification requirements and design considerations apply to the design of bolts:

Placement of Bolt Groups

For the required placement of bolt groups at the ends of axially loaded members, see AISC *Specification* Section J1.7.

Bolts in Combination with Welds or Rivets

For bolts used in combination with welds or rivets, see AISC *Specification* Section J1.8 or J1.9, respectively.

Galvanizing High-Strength Bolts and Nuts

Galvanizing of high-strength bolts is permitted as follows:

1. By the hot-dip or mechanical process for ASTM A325 Type 1 high-strength bolts, per ASTM A325 Section 4.3
2. By the mechanical process only for ASTM F1852 twist-off-type tension-control bolt assemblies, per ASTM F1852 Section 6.3
3. By the hot-dip or mechanical process for ASTM A449 bolts, per ASTM A449 Section 5.1

Nuts for ASTM A325 and F1852 bolts must be galvanized by the same process as the bolt with which they are used. See RCSC *Specification* Table 2.1 for compatible nut grade and finish requirements for ASTM A325 and F1852 bolts, and ASTM A563 for compatible nut grade and finish requirements for ASTM A449 bolts.

Group B bolts are not permitted to be galvanized, per ASTM A490 Section 5.4 and ASTM F2280 Section 6.6. See also RCSC *Specification* Commentary Section 2.3 where it discusses that ASTM A490 bolts and F2280 twist-off-type tension-control bolt assemblies are permitted to be coated using a method compliant with ASTM F1136.

Reuse of Bolts

The reuse of high-strength bolts is limited, per RCSC *Specification* Section 2.3.3. See also Bowman and Betancourt (1991) and AISC Design Guide 17, Section 8.6 (Kulak, 2002).

Fatigue Applications

For applications involving fatigue, see RCSC *Specification* Sections 4.2, 4.3 and 5.5, and AISC *Specification* Appendix 3.

Entering and Tightening Clearances

Clearances must be provided for the entering and tightening of the bolts with an impact wrench. The clearance requirements for conventional high-strength bolts (ASTM A325 and A490) are as given in Table 7-15. When high-strength tension-control bolts (ASTM F1852 and F2280) are specified, the clearance requirements are as given in Table 7-16.

Fully Threaded ASTM A325 Bolts

ASTM A325 bolts with length equal to or less than four times the nominal bolt diameter may be ordered as fully threaded with the designation ASTM A325T. Fully threaded ASTM A325T bolts are not for use in bearing-type X connections since it would be impossible to exclude the threads from the shear plane. While this supplementary provision exists for ASTM A325 bolts, there is no similar supplementary provision made in ASTM A490 for full-length threading.

ASTM A307 Bolts

Limitations are provided on the use of ASTM A307 bolts, per AISC *Specification* Sections J1.8 and J1.10. ASTM A307 bolts are available with both hex and square heads in diameters from ¼ in. to 4 in. in Grade A for general applications and Grade B for cast-iron-flanged piping joints. ASTM A563 Grade A nuts are recommended for use with ASTM A307 bolts. Other suitable grades are listed in ASTM A563 Table X1.1.

ASTM A449 Bolts

Limitations are provided on the use of ASTM A449 bolts, per AISC *Specification* Sections A3.3 and J3.1.

DESIGN TABLE DISCUSSION

Table 7-1. Available Shear Strength of Bolts

The available bolt shear strengths of various grades and sizes of bolts are summarized in Table 7-1.

Table 7-2. Available Tensile Strength of Bolts

The available bolt tensile strengths of various grades and sizes of bolts are summarized in Table 7-2.

Table 7-3. Available Resistance to Slip

The available slip resistances of various grades and sizes of bolts are summarized in Table 7-3.

Tables 7-4 and 7-5. Available Bearing Strength at Bolt Holes

The available bearing strength at bolt holes is tabulated for various spacings and edge distances in Tables 7-4 and 7-5, respectively. Note that these tables may be applied to bolts with countersunk heads, by subtracting one-half the depth of the countersink from the material

thickness, t. As illustrated in Figure 7-10, this is equivalent to subtracting $d_b/4$ from the material thickness, t.

Tables 7-6 through 7-13. Coefficients C for Eccentrically Loaded Bolt Groups

Tables 7-6 through 7-13 employ the instantaneous center of rotation method for the bolt patterns and eccentric conditions indicated, and inclined loads at 0°, 15°, 30°, 45°, 60° and 75°. The tabulated non-dimensional coefficient, C, represents the number of bolts that are effective in resisting the eccentric shear force. In the following discussion, r_n is the least nominal strength of one bolt determined from the limit states of bolt shear strength, bearing strength at bolt holes, and slip resistance (if the connection is to be slip-critical).

When Analyzing a Known Bolt Group Geometry

For any of the bolt group geometries shown, the available strength of the eccentrically loaded bolt group, ϕR_n or R_n/Ω, is determined as

$$R_n = C \times r_n \tag{7-19}$$

$$\phi = 0.75 \qquad \Omega = 2.00$$

When Selecting a Bolt Group

The available strength must be greater than or equal to the required strength, P_u or P_a. Thus, by dividing the required strength, P_u or P_a, by ϕr_n or r_n/Ω, the minimum coefficient, C, is obtained. The bolt group can then be selected from the table corresponding to the appropriate load angle, at the appropriate eccentricity, e_x, for which the coefficient is of that magnitude or greater.

These tables may be used with any bolt diameter and are conservative when used with Group B bolts (see Kulak, 1975). Linear interpolation within a given table between adjacent values of e_x is permitted. Although this procedure is based on bearing connections,

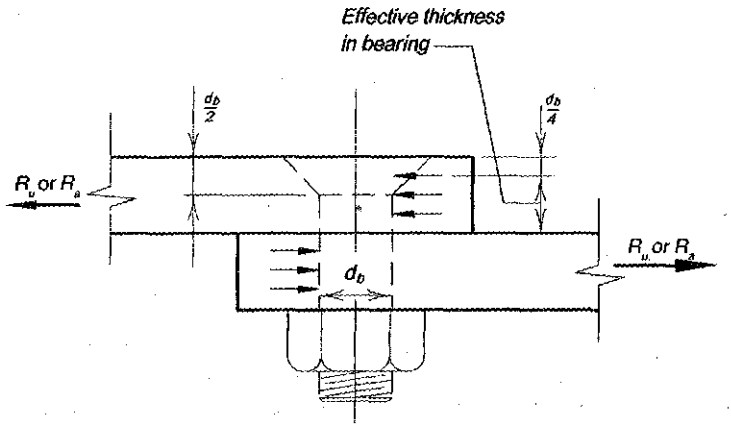

Fig. 7-10. Effective bearing-thickness for bolts with countersunk heads.

both load tests and analytical studies indicate that it may be conservatively extended to slip-critical connections (Kulak, 1975).

A convergence criterion of 1% was employed for the tabulated iterative solutions. Straight-line interpolation between values for loads at different angles may be significantly unconservative. Either a direct analysis should be performed or the values for the next lower angle increment in the tables should be used for design. For bolt group patterns not treated in these tables, a direct analysis is required if the instantaneous center of rotation method is to be used.

In some cases, it is necessary to calculate the pure moment strength of a bolt group for purposes of linear interpolation. For these cases, the value of C' has been provided for a load angle of 0°. This moment strength of the bolt group is based on the instantaneous center of rotation method and, since a moment-only condition is assumed, the instantaneous center of rotation coincides with the center of gravity of the bolt group. In this case, the strength is:

$$M_{max} = C' r_n \tag{7-20}$$

where

$$C' = \sum \left[l_i \left(1 - e^{-\left(\frac{10 l_i \Delta_{max}}{l_{max}} \right)} \right)^{0.55} \right], \text{ in.} \tag{7-21}$$

l_i = distance from the center of gravity of the bolt group to the ith bolt, in.
Δ_{max} = maximum deformation on the bolt farthest from the center of gravity = 0.34 in.
l_{max} = distance from the center of gravity of the bolt group to the center of the farthest bolt, in.

Table 7-14. Dimensions of High-Strength Fasteners

Dimensions of ASTM A325 and A490 bolts, A563 nuts, and F436 washers are given and illustrated in Table 7-14.

Table 7-15 and 16. Entering and Tightening Clearances

Clearance is required for entering and tightening bolts with an impact wrench. The required clearances are given for conventional high-strength bolts and twist-off-type tension-control bolt assemblies in Tables 7-15 and 7-16, respectively.

Table 7-17. Threading Dimensions for High-Strength and Non-High-Strength Bolts

Data regarding the characteristics of the threading dimensions of high-strength and non-high-strength bolts is provided in Table 7-17.

Table 7-18. Weights of High-Strength Fasteners

Weights of conventional ASTM A325 and A490 bolts, A563 nuts, and F436 washers are given in Table 7-18. For dimensions and weights of tension-control ASTM F1852 and F2280 bolts, refer to manufacturers' literature or the Industrial Fasteners Institute (IFI). For dimensions of ASTM A449 bolts, refer to Table 7-19.

Table 7-19. Dimensions of Non-High-Strength Fasteners

Typical non-high-strength bolt head and nut dimensions are given in Table 7-19. Thread lengths listed in this table may be calculated for non-high-strength bolts as $2d + 1/4$ in. for bolts up to 6 in. long and $2d + 1/2$ in. for bolts over 6 in. long, where d is the bolt diameter. Note that these thread lengths are longer than those given previously for high-strength bolts in Table 7-14. Threading dimensions are given in Table 7-17.

Tables 7-20, 7-21 and 7-22. Weights of Non-High-Strength Fasteners

Weights of non-high-strength bolts are given in Tables 7-20, 7-21 and 7-22.

PART 7 REFERENCES

American Iron and Steel Institute (2007), *North American Specification for the Design of Cold-Formed Steel Structural Members*, AISI, Washington, DC.

Bowman, M.D. and Betancourt, M. (1991), "Reuse of A325 and A490 High-Strength Bolts," *Engineering Journal*, Vol. 28, No. 3, 3rd Quarter, pp. 110–118, AISC, Chicago, IL.

Carter, C.J. (1996), "Specifying Bolt Length for High-Strength Bolts," *Engineering Journal*, Vol. 33, No. 2, 2nd Quarter, pp. 43–53, AISC, Chicago, IL.

Crawford, S.F and Kulak, G.L. (1968), "Behavior of Eccentrically Loaded Bolted Connections," *Studies in Structural Engineering*, No. 4, Department of Civil Engineering, Nova Scotia Technical College, Halifax, Nova Scotia.

Henderson, J.E. (1996), "Bending, Bolting and Nailing of Hollow Structural Sections," *Proceedings International Conference on Tubular Structures*, pp. 150–161, American Welding Society.

Higgins, T.R. (1971), "Treatment of Eccentrically Loaded Connections in the AISC Manual," *Engineering Journal*, Vol. 8, No. 2, April, pp. 52–54, AISC, Chicago, IL.

Korol, R.M., Ghobarah, A. and Mourad, S. (1993), "Blind Bolting W-Shape Beams to HSS Columns," *Journal of Structural Engineering*, ASCE, Vol.119, No.12, pp. 3,463–3,481.

Kulak, G.L. (1975), Eccentrically Loaded Slip-Resistant Connections," *Engineering Journal*, Vol. 12, No. 2, 2nd Quarter, pp. 52–55, AISC, Chicago, IL.

Kulak, G.L. (2002), *High-Strength Bolts—A Primer for Structural Engineers*, Design Guide 17, AISC, Chicago, IL.

Packer, J.A. (1996), "Nailed Tubular Connections under Axial Loading," *Journal of Structural Engineering*, ASCE, Vol. 122, No. 8, pp. 867–872.

Sherman, D.R. (1995), "Simple Framing Connections to HSS Columns," *Proceedings National Steel Construction Conference*, AISC, pp. 30-1 to 30-16.

Table 7-1
Available Shear Strength of Bolts, kips

Nominal Bolt Diameter, *d*, in.					5/8		3/4		7/8		1	
Nominal Bolt Area, in.²					0.307		0.442		0.601		0.785	
ASTM Desig.	Thread Cond.	F_{nv}/Ω (ksi) ASD	ϕF_{nv} (ksi) LRFD	Loading	r_n/Ω ASD	ϕr_n LRFD	r_n/Ω ASD	ϕr_n LRFD	r_n/Ω ASD	ϕr_n LRFD	r_n/Ω ASD	ϕr_n LRFD
Group A	N	27.0	40.5	S	8.29	12.4	11.9	17.9	16.2	24.3	21.2	31.8
				D	16.6	24.9	23.9	35.8	32.5	48.7	42.4	63.6
	X	34.0	51.0	S	10.4	15.7	15.0	22.5	20.4	30.7	26.7	40.0
				D	20.9	31.3	30.1	45.1	40.9	61.3	53.4	80.1
Group B	N	34.0	51.0	S	10.4	15.7	15.0	22.5	20.4	30.7	26.7	40.0
				D	20.9	31.3	30.1	45.1	40.9	61.3	53.4	80.1
	X	42.0	63.0	S	12.9	19.3	18.6	27.8	25.2	37.9	33.0	49.5
				D	25.8	38.7	37.1	55.7	50.5	75.7	65.9	98.9
A307	–	13.5	20.3	S	4.14	6.23	5.97	8.97	8.11	12.2	10.6	15.9
				D	8.29	12.5	11.9	17.9	16.2	24.4	21.2	31.9

Nominal Bolt Diameter, *d*, in.					1 1/8		1 1/4		1 3/8		1 1/2	
Nominal Bolt Area, in.²					0.994		1.23		1.48		1.77	
ASTM Desig.	Thread Cond.	F_{nv}/Ω (ksi) ASD	ϕF_{nv} (ksi) LRFD	Loading	r_n/Ω ASD	ϕr_n LRFD	r_n/Ω ASD	ϕr_n LRFD	r_n/Ω ASD	ϕr_n LRFD	r_n/Ω ASD	ϕr_n LRFD
Group A	N	27.0	40.5	S	26.8	40.3	33.2	49.8	40.0	59.9	47.8	71.7
				D	53.7	80.5	66.4	99.6	79.9	120	95.6	143
	X	34.0	51.0	S	33.8	50.7	41.8	62.7	50.3	75.5	60.2	90.3
				D	67.6	101	83.6	125	101	151	120	181
Group B	N	34.0	51.0	S	33.8	50.7	41.8	62.7	50.3	75.5	60.2	90.3
				D	67.6	101	83.6	125	101	151	120	181
	X	42.0	63.0	S	41.7	62.6	51.7	77.5	62.2	93.2	74.3	112
				D	83.5	125	103	155	124	186	149	223
A307	–	13.5	20.3	S	13.4	20.2	16.6	25.0	20.0	30.0	23.9	35.9
				D	26.8	40.4	33.2	49.9	40.0	60.1	47.8	71.9

ASD	LRFD
$\Omega = 2.00$	$\phi = 0.75$

For end loaded connections greater than 38 in., see AISC *Specification* Table J3.2 footnote b.

Table 7-2
Available Tensile Strength of Bolts, kips

Nominal Bolt Diameter, d, in.			5/8		3/4		7/8		1	
Nominal Bolt Area, in.^{2}			0.307		0.442		0.601		0.785	
ASTM Desig.	F_{nt}/Ω (ksi)	ϕF_{nt} (ksi)	r_n/Ω	ϕr_n	r_n/Ω	ϕr_n	r_n/Ω	ϕr_n	r_n/Ω	ϕr_n
	ASD	LRFD	ASD	LRFD	ASD	LRFD	ASD	LRFD	ASD	LRFD
Group A	45.0	67.5	13.8	20.7	19.9	29.8	27.1	40.6	35.3	53.0
Group B	56.5	84.8	17.3	26.0	25.0	37.4	34.0	51.0	44.4	66.6
A307	22.5	33.8	6.90	10.4	9.94	14.9	13.5	20.3	17.7	26.5

Nominal Bolt Diameter, d, in.			1 1/8		1 1/4		1 3/8		1 1/2	
Nominal Bolt Area, in.^{2}			0.994		1.23		1.48		1.77	
ASTM Desig.	F_{nt}/Ω (ksi)	ϕF_{nt} (ksi)	r_n/Ω	ϕr_n	r_n/Ω	ϕr_n	r_n/Ω	ϕr_n	r_n/Ω	ϕr_n
	ASD	LRFD	ASD	LRFD	ASD	LRFD	ASD	LRFD	ASD	LRFD
Group A	45.0	67.5	44.7	67.1	55.2	82.8	66.8	100	79.5	119
Group B	56.5	84.8	56.2	84.2	69.3	104	83.9	126	99.8	150
A307	22.5	33.8	22.4	33.5	27.6	41.4	33.4	50.1	39.8	59.6

ASD	LRFD
$\Omega = 2.00$	$\phi = 0.75$

Group A Bolts

Table 7-3
Slip-Critical Connections
Available Shear Strength, kips
(Class A Faying Surface, $\mu = 0.30$)

Group A Bolts

Hole Type	Loading	Nominal Bolt Diameter, d, in.							
		5/8		3/4		7/8		1	
		Minimum Group A Bolt Pretension, kips							
		19		28		39		51	
		r_n/Ω	ϕr_n	r_n/Ω	ϕr_n	r_n/Ω	ϕr_n	r_n/Ω	ϕr_n
		ASD	LRFD	ASD	LRFD	ASD	LRFD	ASD	LRFD
STD/SSLT	S	4.29	6.44	6.33	9.49	8.81	13.2	11.5	17.3
	D	8.59	12.9	12.7	19.0	17.6	26.4	23.1	34.6
OVS/SSLP	S	3.66	5.47	5.39	8.07	7.51	11.2	9.82	14.7
	D	7.32	10.9	10.8	16.1	15.0	22.5	19.6	29.4
LSL	S	3.01	4.51	4.44	6.64	6.18	9.25	8.08	12.1
	D	6.02	9.02	8.87	13.3	12.4	18.5	16.2	24.2

Hole Type	Loading	Nominal Bolt Diameter, d, in.							
		1 1/8		1 1/4		1 3/8		1 1/2	
		Minimum Group A Bolt Pretension, kips							
		56		71		85		103	
		r_n/Ω	ϕr_n	r_n/Ω	ϕr_n	r_n/Ω	ϕr_n	r_n/Ω	ϕr_n
		ASD	LRFD	ASD	LRFD	ASD	LRFD	ASD	LRFD
STD/SSLT	S	12.7	19.0	16.0	24.1	19.2	28.8	23.3	34.9
	D	25.3	38.0	32.1	48.1	38.4	57.6	46.6	69.8
OVS/SSLP	S	10.8	16.1	13.7	20.5	16.4	24.5	19.8	29.7
	D	21.6	32.3	27.4	40.9	32.7	49.0	39.7	59.4
LSL	S	8.87	13.3	11.2	16.8	13.5	20.2	16.3	24.4
	D	17.7	26.6	22.5	33.7	26.9	40.3	32.6	48.9

STD = standard hole
OVS = oversized hole
SSLT = short-slotted hole transverse to the line of force
SSLP = short-slotted hole parallel to the line of force
LSL = long-slotted hole transverse or parallel to the line of force

S = single shear
D = double shear

Hole Type	ASD	LRFD
STD and SSLT	$\Omega = 1.50$	$\phi = 1.00$
OVS and SSLP	$\Omega = 1.76$	$\phi = 0.85$
LSL	$\Omega = 2.14$	$\phi = 0.70$

Note: Slip-critical bolt values assume no more than one filler has been provided or bolts have been added to distribute loads in the fillers.
See AISC *Specification* Sections J3.8 and J5 for provisions when fillers are present.
For Class B faying surfaces, multiply the tabulated available strength by 1.67.

Table 7-3 (continued)
Slip-Critical Connections
Available Shear Strength, kips
(Class A Faying Surface, $\mu = 0.30$)

Group B Bolts

Group B Bolts

Hole Type	Loading	Nominal Bolt Diameter, *d*, in.							
		5/8		3/4		7/8		1	
		Minimum Group B Bolt Pretension, kips							
		24		35		49		64	
		r_n/Ω	ϕr_n	r_n/Ω	ϕr_n	r_n/Ω	ϕr_n	r_n/Ω	ϕr_n
		ASD	LRFD	ASD	LRFD	ASD	LRFD	ASD	LRFD
STD/SSLT	S	5.42	8.14	7.91	11.9	11.1	16.6	14.5	21.7
	D	10.8	16.3	15.8	23.7	22.1	33.2	28.9	43.4
OVS/SSLP	S	4.62	6.92	6.74	10.1	9.44	14.1	12.3	18.4
	D	9.25	13.8	13.5	20.2	18.9	28.2	24.7	36.9
LSL	S	3.80	5.70	5.54	8.31	7.76	11.6	10.1	15.2
	D	7.60	11.4	11.1	16.6	15.5	23.3	20.3	30.4

Hole Type	Loading	Nominal Bolt Diameter, *d*, in.							
		1 1/8		1 1/4		1 3/8		1 1/2	
		Minimum Group B Bolt Pretension, kips							
		80		102		121		148	
		r_n/Ω	ϕr_n	r_n/Ω	ϕr_n	r_n/Ω	ϕr_n	r_n/Ω	ϕr_n
		ASD	LRFD	ASD	LRFD	ASD	LRFD	ASD	LRFD
STD/SSLT	S	18.1	27.1	23.1	34.6	27.3	41.0	33.4	50.2
	D	36.2	54.2	46.1	69.2	54.7	82.0	66.9	100
OVS/SSLP	S	15.4	23.1	19.6	29.4	23.3	34.9	28.5	42.6
	D	30.8	46.1	39.3	58.8	46.6	69.7	57.0	85.3
LSL	S	12.7	19.0	16.2	24.2	19.2	28.7	23.4	35.1
	D	25.3	38.0	32.3	48.4	38.3	57.4	46.9	70.2

STD = standard hole
OVS = oversized hole
SSLT = short-slotted hole transverse to the line of force
SSLP = short-slotted hole parallel to the line of force
LSL = long-slotted hole transverse or parallel to the line of force

S = single shear
D = double shear

Hole Type	ASD	LRFD
STD and SSLT	$\Omega = 1.50$	$\phi = 1.00$
OVS and SSLP	$\Omega = 1.76$	$\phi = 0.85$
LSL	$\Omega = 2.14$	$\phi = 0.70$

Note: Slip-critical bolt values assume no more than one filler has been provided or bolts have been added to distribute loads in the fillers.
See AISC *Specification* Sections J3.8 and J5 for provisions when fillers are present.
For Class B faying surfaces, multiply the tabulated available strength by 1.67.

Table 7-4
Available Bearing Strength at Bolt Holes Based on Bolt Spacing
kips/in. thickness

Hole Type	Bolt Spacing, s, in.	F_u, ksi	Nominal Bolt Diameter, d, in.							
			5/8		3/4		7/8		1	
			r_n/Ω	ϕr_n	r_n/Ω	ϕr_n	r_n/Ω	ϕr_n	r_n/Ω	ϕr_n
			ASD	LRFD	ASD	LRFD	ASD	LRFD	ASD	LRFD
STD SSLT	$2^2/_3\ d_b$	58	34.1	51.1	41.3	62.0	48.6	72.9	55.8	83.7
		65	38.2	57.3	46.3	69.5	54.4	81.7	62.6	93.8
	3 in.	58	43.5	65.3	52.2	78.3	60.9	91.4	67.4	101
		65	48.8	73.1	58.5	87.8	68.3	102	75.6	113
SSLP	$2^2/_3\ d_b$	58	27.6	41.3	34.8	52.2	42.1	63.1	47.1	70.7
		65	30.9	46.3	39.0	58.5	47.1	70.7	52.8	79.2
	3 in.	58	43.5	65.3	52.2	78.3	60.9	91.4	58.7	88.1
		65	48.8	73.1	58.5	87.8	68.3	102	65.8	98.7
OVS	$2^2/_3\ d_b$	58	29.7	44.6	37.0	55.5	44.2	66.3	49.3	74.0
		65	33.3	50.0	41.4	62.2	49.6	74.3	55.3	82.9
	3 in.	58	43.5	65.3	52.2	78.3	60.9	91.4	60.9	91.4
		65	48.8	73.1	58.5	87.8	68.3	102	68.3	102
LSLP	$2^2/_3\ d_b$	58	3.62	5.44	4.35	6.53	5.08	7.61	5.80	8.70
		65	4.06	6.09	4.88	7.31	5.69	8.53	6.50	9.75
	3 in.	58	43.5	65.3	39.2	58.7	28.3	42.4	17.4	26.1
		65	48.8	73.1	43.9	65.8	31.7	47.5	19.5	29.3
LSLT	$2^2/_3\ d_b$	58	28.4	42.6	34.4	51.7	40.5	60.7	46.5	69.8
		65	31.8	47.7	38.6	57.9	45.4	68.0	52.1	78.2
	3 in.	58	36.3	54.4	43.5	65.3	50.8	76.1	56.2	84.3
		65	40.6	60.9	48.8	73.1	56.9	85.3	63.0	94.5
STD, SSLT, SSLP, OVS, LSLP	$s \geq s_{full}$	58	43.5	65.3	52.2	78.3	60.9	91.4	69.6	104
		65	48.8	73.1	58.5	87.8	68.3	102	78.0	117
LSLT	$s \geq s_{full}$	58	36.3	54.4	43.5	65.3	50.8	76.1	58.0	87.0
		65	40.6	60.9	48.8	73.1	56.9	85.3	65.0	97.5
Spacing for full bearing strength s_{full}[a], in.		STD, SSLT, LSLT	$1^{15}/_{16}$		$2^5/_{16}$		$2^{11}/_{16}$		$3^1/_{16}$	
		OVS	$2^1/_{16}$		$2^7/_{16}$		$2^{13}/_{16}$		$3^1/_4$	
		SSLP	$2^1/_8$		$2^1/_2$		$2^7/_8$		$3^5/_{16}$	
		LSLP	$2^{13}/_{16}$		$3^3/_8$		$3^{15}/_{16}$		$4^1/_2$	
Minimum Spacing[a] $= 2^2/_3 d$, in.			$1^{11}/_{16}$		2		$2^5/_{16}$		$2^{11}/_{16}$	

STD = standard hole
SSLT = short-slotted hole oriented transverse to the line of force
SSLP = short-slotted hole oriented parallel to the line of force
OVS = oversized hole
LSLP = long-slotted hole oriented parallel to the line of force
LSLT = long-slotted hole oriented transverse to the line of force

ASD	LRFD
$\Omega = 2.00$	$\phi = 0.75$

Note: Spacing indicated is from the center of the hole or slot to the center of the adjacent hole or slot in the line of force. Hole deformation is considered. When hole deformation is not considered, see AISC *Specification* Section J3.10.

[a] Decimal value has been rounded to the nearest sixteenth of an inch.

Table 7-4 (continued)
Available Bearing Strength at Bolt Holes Based on Bolt Spacing
kips/in. thickness

Hole Type	Bolt Spacing, s, in.	F_u, ksi	Nominal Bolt Diameter, d, in.							
			1 1/8		1 1/4		1 3/8		1 1/2	
			r_n/Ω ASD	ϕr_n LRFD	r_n/Ω ASD	ϕr_n LRFD	r_n/Ω ASD	ϕr_n LRFD	r_n/Ω ASD	ϕr_n LRFD
STD SSLT	$2\frac{2}{3}\,d_b$	58	63.1	94.6	70.3	105	77.6	116	84.8	127
		65	70.7	106	78.8	118	86.9	130	95.1	143
	3 in.	58	63.1	94.6	—	—	—	—	—	—
		65	70.7	106	—	—	—	—	—	—
SSLP	$2\frac{2}{3}\,d_b$	58	52.2	78.3	59.5	89.2	66.7	100	74.0	111
		65	58.5	87.8	66.6	99.9	74.8	112	82.9	124
	3 in.	58	52.2	78.3	—	—	—	—	—	—
		65	58.5	87.8	—	—	—	—	—	—
OVS	$2\frac{2}{3}\,d_b$	58	54.4	81.6	61.6	92.4	68.9	103	76.1	114
		65	60.9	91.4	69.1	104	77.2	116	85.3	128
	3 in.	58	54.4	81.6	—	—	—	—	—	—
		65	60.9	91.4	—	—	—	—	—	—
LSLP	$2\frac{2}{3}\,d_b$	58	6.53	9.79	7.25	10.9	7.98	12.0	8.70	13.1
		65	7.31	11.0	8.13	12.2	8.94	13.4	9.75	14.6
	3 in.	58	6.53	9.79	—	—	—	—	—	—
		65	7.31	11.0	—	—	—	—	—	—
LSLT	$2\frac{2}{3}\,d_b$	58	52.6	78.8	58.6	87.9	64.6	97.0	70.7	106
		65	58.9	88.4	65.7	98.5	72.4	109	79.2	119
	3 in.	58	52.6	78.8	—	—	—	—	—	—
		65	58.9	88.4	—	—	—	—	—	—
STD, SSLT, SSLP, OVS, LSLP	$s \geq s_{full}$	58	78.3	117	87.0	131	95.7	144	104	157
		65	87.8	132	97.5	146	107	161	117	176
LSLT	$s \geq s_{full}$	58	65.3	97.9	72.5	109	79.8	120	87.0	131
		65	73.1	110	81.3	122	89.4	134	97.5	146
Spacing for full bearing strength s_{full}[a], in.	STD, SSLT, LSLT		$3\frac{7}{16}$		$3\frac{13}{16}$		$4\frac{3}{16}$		$4\frac{9}{16}$	
	OVS		$3\frac{11}{16}$		$4\frac{1}{16}$		$4\frac{7}{16}$		$4\frac{13}{16}$	
	SSLP		$3\frac{3}{4}$		$4\frac{1}{8}$		$4\frac{1}{2}$		$4\frac{7}{8}$	
	LSLP		$5\frac{1}{16}$		$5\frac{5}{8}$		$6\frac{3}{16}$		$6\frac{3}{4}$	
Minimum Spacing[a] $= 2\frac{2}{3}d$, in.			3		$3\frac{5}{16}$		$3\frac{11}{16}$		4	

STD = standard hole
SSLT = short-slotted hole oriented transverse to the line of force
SSLP = short-slotted hole oriented parallel to the line of force
OVS = oversized hole
LSLP = long-slotted hole oriented parallel to the line of force
LSLT = long-slotted hole oriented transverse to the line of force

ASD	LRFD
$\Omega = 2.00$	$\phi = 0.75$

— indicates spacing less than minimum spacing required per AISC *Specification* Section J3.3.

Note: Spacing indicated is from the center of the hole or slot to the center of the adjacent hole or slot in the line of force. Hole deformation is considered. When hole deformation is not considered, see AISC *Specification* Section J3.10.

[a] Decimal value has been rounded to the nearest sixteenth of an inch.

Table 7-5
Available Bearing Strength at Bolt Holes Based on Edge Distance
kips/in. thickness

Hole Type	Edge Distance L_e, in.	F_u, ksi	Nominal Bolt Diameter, d, in.							
			5/8		3/4		7/8		1	
			r_n/Ω ASD	ϕr_n LRFD	r_n/Ω ASD	ϕr_n LRFD	r_n/Ω ASD	ϕr_n LRFD	r_n/Ω ASD	ϕr_n LRFD
STD SSLT	1 1/4	58	31.5	47.3	29.4	44.0	27.2	40.8	25.0	37.5
		65	35.3	53.0	32.9	49.4	30.5	45.7	28.0	42.0
	2	58	43.5	65.3	52.2	78.3	53.3	79.9	51.1	76.7
		65	48.8	73.1	58.5	87.8	59.7	89.6	57.3	85.9
SSLP	1 1/4	58	28.3	42.4	26.1	39.2	23.9	35.9	20.7	31.0
		65	31.7	47.5	29.3	43.9	26.8	40.2	23.2	34.7
	2	58	43.5	65.3	52.2	78.3	50.0	75.0	46.8	70.1
		65	48.8	73.1	58.5	87.8	56.1	84.1	52.4	78.6
OVS	1 1/4	58	29.4	44.0	27.2	40.8	25.0	37.5	21.8	32.6
		65	32.9	49.4	30.5	45.7	28.0	42.0	24.4	36.6
	2	58	43.5	65.3	52.2	78.3	51.1	76.7	47.9	71.8
		65	48.8	73.1	58.5	87.8	57.3	85.9	53.6	80.4
LSLP	1 1/4	58	16.3	24.5	10.9	16.3	5.44	8.16	—	—
		65	18.3	27.4	12.2	18.3	6.09	9.14	—	—
	2	58	42.4	63.6	37.0	55.5	31.5	47.3	26.1	39.2
		65	47.5	71.3	41.4	62.2	35.3	53.0	29.3	43.9
LSLT	1 1/4	58	26.3	39.4	24.5	36.7	22.7	34.0	20.8	31.3
		65	29.5	44.2	27.4	41.1	25.4	38.1	23.4	35.0
	2	58	36.3	54.4	43.5	65.3	44.4	66.6	42.6	63.9
		65	40.6	60.9	48.8	73.1	49.8	74.6	47.7	71.6
STD, SSLT, SSLP, OVS, LSLP	$L_e \geq L_{e\,full}$	58	43.5	65.3	52.2	78.3	60.9	91.4	69.6	104
		65	48.8	73.1	58.5	87.8	68.3	102	78.0	117
LSLT	$L_e \geq L_{e\,full}$	58	36.3	54.4	43.5	65.3	50.8	76.1	58.0	87.0
		65	40.6	60.9	48.8	73.1	56.9	85.3	65.0	97.5

Edge distance for full bearing strength $L_e \geq L_{e\,full}$[a], in.					
STD, SSLT, LSLT	1 5/8	1 15/16	2 1/4	2 9/16
OVS	1 11/16	2	2 5/16	2 5/8
SSLP	1 11/16	2	2 5/16	2 11/16
LSLP	2 1/16	2 7/16	2 7/8	3 1/4

STD = standard hole
SSLT = short-slotted hole oriented transverse to the line of force
SSLP = short-slotted hole oriented parallel to the line of force
OVS = oversized hole
LSLP = long-slotted hole oriented parallel to the line of force
LSLT = long-slotted hole oriented transverse to the line of force

ASD	LRFD
$\Omega = 2.00$	$\phi = 0.75$

— indicates spacing less than minimum spacing required per AISC *Specification* Section J3.3.

Note: Spacing indicated is from the center of the hole or slot to the center of the adjacent hole or slot in the line of force. Hole deformation is considered. When hole deformation is not considered, see AISC *Specification* Section J3.10.

[a] Decimal value has been rounded to the nearest sixteenth of an inch.

Table 7-5 (continued)
Available Bearing Strength at Bolt Holes Based on Edge Distance
kips/in. thickness

Hole Type	Edge Distance L_e, in.	F_u, ksi	Nominal Bolt Diameter, d, in.							
			1 1/8		1 1/4		1 3/8		1 1/2	
			r_n/Ω ASD	ϕr_n LRFD	r_n/Ω ASD	ϕr_n LRFD	r_n/Ω ASD	ϕr_n LRFD	r_n/Ω ASD	ϕr_n LRFD
STD SSLT	1 1/4	58	22.8	34.3	20.7	31.0	18.5	27.7	16.3	24.5
		65	25.6	38.4	23.2	34.7	20.7	31.1	18.3	27.4
	2	58	48.9	73.4	46.8	70.1	44.6	66.9	42.4	63.6
		65	54.8	82.3	52.4	78.6	50.0	75.0	47.5	71.3
SSLP	1 1/4	58	17.4	26.1	15.2	22.8	13.1	19.6	10.9	16.3
		65	19.5	29.3	17.1	25.6	14.6	21.9	12.2	18.3
	2	58	43.5	65.3	41.3	62.0	39.2	58.7	37.0	55.5
		65	48.8	73.1	46.3	69.5	43.9	65.8	41.4	62.2
OVS	1 1/4	58	18.5	27.7	16.3	24.5	14.1	21.2	12.0	17.9
		65	20.7	31.1	18.3	27.4	15.8	23.8	13.4	20.1
	2	58	44.6	66.9	42.4	63.6	40.2	60.4	38.1	57.1
		65	50.0	75.0	47.5	71.3	45.1	67.6	42.7	64.0
LSLP	1 1/4	58	—	—	—	—	—	—	—	—
		65	—	—	—	—	—	—	—	—
	2	58	20.7	31.0	15.2	22.8	9.79	14.7	4.35	6.53
		65	23.2	34.7	17.1	25.6	11.0	16.5	4.88	7.31
LSLT	1 1/4	58	19.0	28.5	17.2	25.8	15.4	23.1	13.6	20.4
		65	21.3	32.0	19.3	28.9	17.3	25.9	15.2	22.9
	2	58	40.8	61.2	39.0	58.5	37.2	55.7	35.3	53.0
		65	45.7	68.6	43.7	65.5	41.6	62.5	39.6	59.4
STD, SSLT, SSLP, OVS, LSLP	$L_e \geq L_{e\,full}$	58	78.3	117	87.0	131	95.7	144	104	157
		65	87.8	132	97.5	146	107	161	117	176
LSLT	$L_e \geq L_{e\,full}$	58	65.3	97.9	72.5	109	79.8	120	87.0	131
		65	73.1	110	81.3	122	89.4	134	97.5	146
Edge distance for full bearing strength $L_e \geq L_{e\,full}$[a], in.		STD, SSLT, LSLT	2 7/8		3 3/16		3 1/2		3 13/16	
		OVS	3		3 5/16		3 5/8		3 15/16	
		SSLP	3		3 5/16		3 5/8		3 15/16	
		LSLP	3 11/16		4 1/16		4 1/2		4 7/8	

STD = standard hole
SSLT = short-slotted hole oriented transverse to the line of force
SSLP = short-slotted hole oriented parallel to the line of force
OVS = oversized hole
LSLP = long-slotted hole oriented parallel to the line of force
LSLT = long-slotted hole oriented transverse to the line of force

ASD	LRFD
$\Omega = 2.00$	$\phi = 0.75$

— indicates spacing less than minimum spacing required per AISC *Specification* Section J3.3.
Note: Spacing indicated is from the center of the hole or slot to the center of the adjacent hole or slot in the line of force. Hole deformation is considered. When hole deformation is not considered, see AISC *Specification* Section J3.10.
[a] Decimal value has been rounded to the nearest sixteenth of an inch.

Table 7-6
Coefficients C for Eccentrically Loaded Bolt Groups
Angle = 0°

Available strength of a bolt group, ϕR_n or R_n/Ω, is determined with

$$R_n = C \times r_n$$

or

LRFD	ASD
$C_{min} = \frac{P_u}{\phi r_n}$	$C_{min} = \frac{\Omega P_a}{r_n}$

where

P = required force, P_u or P_a, kips
r_n = nominal strength per bolt, kips
e = eccentricity of P with respect to centroid of bolt group, in. (not tabulated, may be determined by geometry)
e_x = horizontal component of e, in.
s = bolt spacing, in.
C = coefficient tabulated below

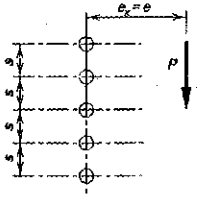

s, in.	e_x, in.	Number of Bolts in One Vertical Row, n										
		2	3	4	5	6	7	8	9	10	11	12
3	2	1.18	2.23	3.32	4.39	5.45	6.48	7.51	8.52	9.53	10.5	11.5
	3	0.88	1.75	2.81	3.90	4.98	6.06	7.12	8.17	9.21	10.2	11.3
	4	0.69	1.40	2.36	3.40	4.47	5.56	6.64	7.72	8.78	9.84	10.9
	5	0.56	1.15	2.01	2.96	3.98	5.05	6.13	7.22	8.30	9.38	10.4
	6	0.48	0.97	1.73	2.59	3.55	4.57	5.63	6.70	7.79	8.87	9.96
	7	0.41	0.83	1.51	2.28	3.17	4.13	5.15	6.20	7.28	8.36	9.44
	8	0.36	0.73	1.34	2.04	2.85	3.75	4.72	5.73	6.78	7.85	8.93
	9	0.32	0.65	1.21	1.83	2.59	3.42	4.34	5.31	6.32	7.36	8.42
	10	0.29	0.59	1.09	1.66	2.36	3.14	4.00	4.92	5.89	6.90	7.94
	12	0.24	0.49	0.92	1.40	2.00	2.68	3.44	4.27	5.15	6.09	7.06
	14	0.21	0.42	0.79	1.21	1.74	2.33	3.01	3.75	4.55	5.41	6.31
	16	0.18	0.37	0.70	1.06	1.53	2.06	2.67	3.33	4.06	4.85	5.68
	18	0.16	0.33	0.62	0.95	1.37	1.84	2.39	3.00	3.66	4.38	5.15
	20	0.15	0.29	0.56	0.85	1.24	1.67	2.16	2.72	3.33	3.99	4.70
	24	0.12	0.25	0.47	0.71	1.03	1.40	1.82	2.29	2.81	3.37	3.99
	28	0.11	0.21	0.40	0.61	0.89	1.20	1.57	1.97	2.42	2.92	3.45
	32	0.09	0.18	0.35	0.54	0.78	1.05	1.37	1.73	2.13	2.57	3.04
	36	0.08	0.16	0.31	0.48	0.69	0.94	1.22	1.54	1.90	2.29	2.72
	C', in.	2.94	5.89	11.3	17.1	25.1	33.8	44.4	55.9	69.2	83.5	100
6	2	1.63	2.71	3.75	4.77	5.77	6.77	7.76	8.75	9.74	10.7	11.7
	3	1.39	2.48	3.56	4.60	5.63	6.65	7.65	8.66	9.66	10.7	11.6
	4	1.18	2.23	3.32	4.39	5.45	6.48	7.51	8.52	9.53	10.5	11.5
	5	1.01	1.98	3.07	4.15	5.23	6.28	7.33	8.36	9.38	10.4	11.4
	6	0.88	1.75	2.81	3.90	4.98	6.06	7.12	8.17	9.21	10.2	11.3
	7	0.77	1.56	2.58	3.64	4.73	5.81	6.89	7.95	9.00	10.1	11.1
	8	0.69	1.40	2.36	3.40	4.47	5.56	6.64	7.72	8.78	9.84	10.9
	9	0.62	1.26	2.17	3.17	4.22	5.30	6.39	7.47	8.55	9.61	10.7
	10	0.56	1.15	2.01	2.96	3.98	5.05	6.13	7.22	8.30	9.38	10.4
	12	0.48	0.97	1.73	2.59	3.55	4.57	5.63	6.70	7.79	8.87	9.96
	14	0.41	0.83	1.51	2.28	3.17	4.13	5.15	6.20	7.28	8.36	9.44
	16	0.36	0.73	1.34	2.04	2.85	3.75	4.72	5.73	6.78	7.85	8.93
	18	0.32	0.65	1.21	1.83	2.59	3.42	4.34	5.31	6.32	7.36	8.42
	20	0.29	0.59	1.09	1.66	2.36	3.14	4.00	4.92	5.89	6.90	7.94
	24	0.24	0.49	0.92	1.40	2.00	2.68	3.44	4.27	5.15	6.09	7.06
	28	0.21	0.42	0.79	1.21	1.74	2.33	3.01	3.75	4.55	5.41	6.31
	32	0.18	0.37	0.70	1.06	1.53	2.06	2.67	3.33	4.06	4.85	5.68
	36	0.16	0.33	0.62	0.95	1.37	1.84	2.39	3.00	3.66	4.38	5.15
	C', in.	5.89	11.8	22.5	34.3	50.2	67.6	88.8	112	138	167	199

Table 7-6 (continued)
Coefficients C for Eccentrically Loaded Bolt Groups
Angle = 15°

Available strength of a bolt group, ϕR_n or R_n/Ω, is determined with

$$R_n = C \times r_n$$

or

LRFD	ASD
$C_{min} = \frac{P_u}{\phi r_n}$	$C_{min} = \frac{\Omega P_a}{r_n}$

where

P = required force, P_u or P_a, kips
r_n = nominal strength per bolt, kips
e = eccentricity of P with respect to centroid of bolt group, in. (not tabulated, may be determined by geometry)
e_x = horizontal component of e, in.
s = bolt spacing, in.
C = coefficient tabulated below

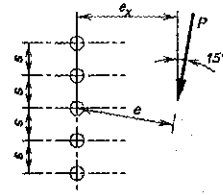

s, in.	e_x, in.	Number of Bolts in One Vertical Row, n										
		2	3	4	5	6	7	8	9	10	11	12
3	2	1.15	2.20	3.28	4.34	5.39	6.42	7.45	8.46	9.47	10.5	11.5
	3	0.86	1.76	2.78	3.85	4.92	5.98	7.03	8.08	9.11	10.1	11.2
	4	0.67	1.42	2.35	3.36	4.41	5.48	6.55	7.61	8.67	9.72	10.8
	5	0.55	1.17	2.00	2.94	3.94	4.98	6.04	7.11	8.18	9.24	10.3
	6	0.47	0.99	1.73	2.58	3.52	4.52	5.55	6.61	7.67	8.74	9.81
	7	0.41	0.86	1.52	2.30	3.16	4.11	5.10	6.13	7.18	8.24	9.30
	8	0.36	0.75	1.35	2.06	2.86	3.74	4.69	5.68	6.70	7.74	8.80
	9	0.32	0.67	1.22	1.86	2.60	3.43	4.32	5.27	6.26	7.28	8.31
	10	0.29	0.61	1.10	1.69	2.38	3.16	4.00	4.90	5.85	6.84	7.85
	12	0.24	0.51	0.93	1.43	2.03	2.71	3.46	4.28	5.15	6.06	7.01
	14	0.21	0.43	0.81	1.24	1.76	2.37	3.04	3.78	4.57	5.41	6.30
	16	0.19	0.38	0.71	1.09	1.56	2.10	2.70	3.37	4.09	4.87	5.69
	18	0.17	0.34	0.63	0.97	1.39	1.88	2.43	3.04	3.70	4.42	5.18
	20	0.15	0.30	0.57	0.88	1.26	1.70	2.20	2.76	3.37	4.03	4.74
	24	0.12	0.25	0.48	0.73	1.06	1.43	1.86	2.33	2.86	3.43	4.04
	28	0.11	0.22	0.41	0.63	0.91	1.23	1.60	2.02	2.47	2.97	3.51
	32	0.09	0.19	0.36	0.55	0.80	1.08	1.41	1.77	2.18	2.62	3.10
	36	0.08	0.17	0.32	0.49	0.71	0.96	1.26	1.58	1.95	2.34	2.78
6	2	1.61	2.69	3.72	4.74	5.74	6.74	7.73	8.73	9.71	10.7	11.7
	3	1.36	2.45	3.52	4.56	5.59	6.60	7.61	8.61	9.61	10.6	11.6
	4	1.15	2.20	3.28	4.34	5.39	6.42	7.45	8.46	9.47	10.5	11.5
	5	0.98	1.96	3.03	4.10	5.16	6.21	7.25	8.28	9.30	10.3	11.3
	6	0.86	1.76	2.78	3.85	4.92	5.98	7.03	8.08	9.11	10.1	11.2
	7	0.75	1.57	2.55	3.60	4.66	5.73	6.80	7.85	8.90	9.94	11.0
	8	0.67	1.42	2.35	3.36	4.41	5.48	6.55	7.61	8.67	9.72	10.8
	9	0.61	1.29	2.16	3.14	4.17	5.23	6.30	7.36	8.43	9.49	10.5
	10	0.55	1.17	2.00	2.94	3.94	4.98	6.04	7.11	8.18	9.24	10.3
	12	0.47	0.99	1.73	2.58	3.52	4.52	5.55	6.61	7.67	8.74	9.81
	14	0.41	0.86	1.52	2.30	3.16	4.11	5.10	6.13	7.18	8.24	9.30
	16	0.36	0.75	1.35	2.06	2.86	3.74	4.69	5.68	6.70	7.74	8.80
	18	0.32	0.67	1.22	1.86	2.60	3.43	4.32	5.27	6.26	7.28	8.31
	20	0.29	0.61	1.10	1.69	2.38	3.16	4.00	4.90	5.85	6.84	7.85
	24	0.24	0.51	0.93	1.43	2.03	2.71	3.46	4.28	5.15	6.06	7.01
	28	0.21	0.43	0.81	1.24	1.76	2.37	3.04	3.78	4.57	5.41	6.30
	32	0.19	0.38	0.71	1.09	1.56	2.10	2.70	3.37	4.09	4.87	5.69
	36	0.17	0.34	0.63	0.97	1.39	1.88	2.43	3.04	3.70	4.42	5.18

Table 7-6 (continued)
Coefficients C for Eccentrically Loaded Bolt Groups
Angle = 30°

Available strength of a bolt group, ϕR_n or R_n/Ω, is determined with

$$R_n = C \times r_n$$

or

LRFD	ASD
$C_{min} = \dfrac{P_u}{\phi r_n}$	$C_{min} = \dfrac{\Omega P_a}{r_n}$

where

P = required force, P_u or P_a, kips
r_n = nominal strength per bolt, kips
e = eccentricity of P with respect to centroid of bolt group, in. (not tabulated, may be determined by geometry)
e_x = horizontal component of e, in.
s = bolt spacing, in.
C = coefficient tabulated below

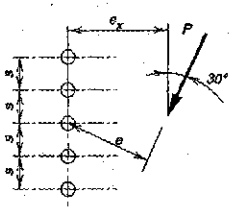

s, in.	e_x, in.	Number of Bolts in One Vertical Row, n										
		2	3	4	5	6	7	8	9	10	11	12
3	2	1.14	2.20	3.25	4.30	5.33	6.36	7.38	8.39	9.40	10.4	11.4
	3	0.86	1.80	2.79	3.83	4.87	5.92	6.96	7.99	9.02	10.0	11.1
	4	0.69	1.50	2.40	3.39	4.41	5.45	6.49	7.53	8.57	9.61	10.6
	5	0.57	1.27	2.08	3.00	3.98	4.99	6.02	7.06	8.11	9.15	10.2
	6	0.49	1.09	1.82	2.68	3.60	4.57	5.58	6.60	7.64	8.68	9.72
	7	0.43	0.95	1.61	2.40	3.27	4.20	5.17	6.17	7.18	8.21	9.25
	8	0.38	0.83	1.44	2.17	2.98	3.86	4.79	5.76	6.75	7.77	8.79
	9	0.34	0.75	1.30	1.98	2.74	3.57	4.46	5.39	6.35	7.34	8.35
	10	0.31	0.67	1.19	1.82	2.52	3.31	4.15	5.05	5.98	6.95	7.93
	12	0.26	0.56	1.01	1.55	2.17	2.87	3.64	4.46	5.33	6.24	7.17
	14	0.23	0.48	0.87	1.35	1.90	2.53	3.23	3.98	4.78	5.63	6.51
	16	0.20	0.42	0.77	1.20	1.69	2.26	2.89	3.58	4.33	5.11	5.94
	18	0.18	0.38	0.69	1.07	1.52	2.04	2.62	3.25	3.94	4.67	5.45
	20	0.16	0.34	0.62	0.97	1.37	1.85	2.38	2.97	3.61	4.30	5.02
	24	0.14	0.28	0.52	0.81	1.16	1.57	2.02	2.53	3.09	3.69	4.33
	28	0.12	0.24	0.45	0.70	1.00	1.36	1.75	2.20	2.69	3.22	3.79
	32	0.10	0.21	0.40	0.61	0.88	1.19	1.54	1.94	2.38	2.85	3.37
	36	0.09	0.19	0.35	0.55	0.78	1.07	1.38	1.74	2.13	2.56	3.03
6	2	1.59	2.66	3.69	4.70	5.71	6.70	7.70	8.69	9.68	10.7	11.7
	3	1.34	2.43	3.48	4.52	5.54	6.55	7.55	8.56	9.55	10.6	11.5
	4	1.14	2.20	3.25	4.30	5.33	6.36	7.38	8.39	9.40	10.4	11.4
	5	0.98	1.99	3.02	4.06	5.11	6.14	7.17	8.20	9.22	10.2	11.2
	6	0.86	1.80	2.79	3.83	4.87	5.92	6.96	7.99	9.02	10.0	11.1
	7	0.77	1.64	2.59	3.60	4.64	5.68	6.73	7.77	8.80	9.83	10.9
	8	0.69	1.50	2.40	3.39	4.41	5.45	6.49	7.53	8.57	9.61	10.6
	9	0.63	1.37	2.23	3.19	4.19	5.22	6.26	7.30	8.34	9.38	10.4
	10	0.57	1.27	2.08	3.00	3.98	4.99	6.02	7.06	8.11	9.15	10.2
	12	0.49	1.09	1.82	2.68	3.60	4.57	5.58	6.60	7.64	8.68	9.72
	14	0.43	0.95	1.61	2.40	3.27	4.20	5.17	6.17	7.18	8.21	9.25
	16	0.38	0.83	1.44	2.17	2.98	3.86	4.79	5.76	6.75	7.77	8.79
	18	0.34	0.75	1.30	1.98	2.74	3.57	4.46	5.39	6.35	7.34	8.35
	20	0.31	0.67	1.19	1.82	2.52	3.31	4.15	5.05	5.98	6.95	7.93
	24	0.26	0.56	1.01	1.55	2.17	2.87	3.64	4.46	5.33	6.24	7.17
	28	0.23	0.48	0.87	1.35	1.90	2.53	3.23	3.98	4.78	5.63	6.51
	32	0.20	0.42	0.77	1.20	1.69	2.26	2.89	3.58	4.33	5.11	5.94
	36	0.18	0.38	0.69	1.07	1.52	2.04	2.62	3.25	3.94	4.67	5.45

Table 7-6 (continued)
Coefficients C for Eccentrically Loaded Bolt Groups
Angle = 45°

Available strength of a bolt group, ϕR_n or R_n/Ω, is determined with

$$R_n = C \times r_n$$

or

LRFD	ASD
$C_{min} = \frac{P_u}{\phi r_n}$	$C_{min} = \frac{\Omega P_a}{r_n}$

where

P = required force, P_u or P_a, kips
r_n = nominal strength per bolt, kips
e = eccentricity of P with respect to centroid of bolt group, in. (not tabulated, may be determined by geometry)
e_x = horizontal component of e, in.
s = bolt spacing, in.
C = coefficient tabulated below

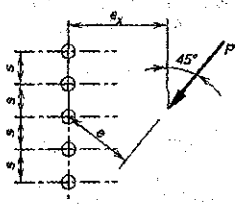

s, in.	e_x, in.	Number of Bolts in One Vertical Row, n										
		2	3	4	5	6	7	8	9	10	11	12
3	2	1.17	2.23	3.26	4.28	5.29	6.30	7.31	8.32	9.32	10.3	11.3
	3	0.92	1.89	2.87	3.87	4.88	5.90	6.91	7.93	8.94	9.95	11.0
	4	0.75	1.63	2.54	3.50	4.49	5.49	6.51	7.52	8.53	9.55	10.6
	5	0.64	1.42	2.25	3.17	4.13	5.11	6.11	7.11	8.12	9.14	10.2
	6	0.55	1.25	2.01	2.88	3.80	4.76	5.73	6.73	7.73	8.73	9.74
	7	0.49	1.11	1.81	2.63	3.51	4.43	5.38	6.36	7.34	8.34	9.34
	8	0.44	0.99	1.64	2.41	3.25	4.14	5.06	6.01	6.98	7.96	8.96
	9	0.40	0.90	1.49	2.22	3.02	3.87	4.77	5.69	6.64	7.61	8.58
	10	0.36	0.81	1.37	2.06	2.82	3.63	4.50	5.39	6.32	7.27	8.23
	12	0.31	0.68	1.17	1.79	2.47	3.22	4.02	4.87	5.74	6.65	7.58
	14	0.27	0.59	1.03	1.58	2.20	2.88	3.62	4.41	5.24	6.11	6.99
	16	0.24	0.52	0.91	1.41	1.97	2.60	3.29	4.03	4.81	5.63	6.48
	18	0.21	0.46	0.82	1.27	1.78	2.36	3.00	3.70	4.43	5.21	6.02
	20	0.19	0.41	0.74	1.16	1.62	2.16	2.76	3.41	4.10	4.84	5.61
	24	0.16	0.35	0.63	0.98	1.38	1.85	2.37	2.94	3.56	4.22	4.92
	28	0.14	0.30	0.54	0.85	1.19	1.61	2.08	2.58	3.14	3.73	4.37
	32	0.12	0.26	0.48	0.75	1.05	1.43	1.84	2.30	2.80	3.34	3.92
	36	0.11	0.23	0.43	0.67	0.94	1.28	1.65	2.07	2.53	3.02	3.55
6	2	1.57	2.64	3.66	4.67	5.67	6.66	7.66	8.65	9.64	10.6	11.6
	3	1.35	2.43	3.46	4.48	5.49	6.49	7.50	8.49	9.49	10.5	11.5
	4	1.17	2.23	3.26	4.28	5.29	6.30	7.31	8.32	9.32	10.3	11.3
	5	1.03	2.05	3.06	4.07	5.09	6.10	7.12	8.13	9.13	10.1	11.1
	6	0.92	1.89	2.87	3.87	4.88	5.90	6.91	7.93	8.94	9.95	11.0
	7	0.83	1.75	2.70	3.68	4.68	5.69	6.71	7.72	8.74	9.75	10.8
	8	0.75	1.63	2.54	3.50	4.49	5.49	6.51	7.52	8.53	9.55	10.6
	9	0.69	1.52	2.39	3.33	4.30	5.30	6.30	7.31	8.33	9.34	10.4
	10	0.64	1.42	2.25	3.17	4.13	5.11	6.11	7.11	8.12	9.14	10.2
	12	0.55	1.25	2.01	2.88	3.80	4.76	5.73	6.73	7.73	8.73	9.74
	14	0.49	1.11	1.81	2.63	3.51	4.43	5.38	6.36	7.34	8.34	9.34
	16	0.44	0.99	1.64	2.41	3.25	4.14	5.06	6.01	6.98	7.96	8.96
	18	0.40	0.90	1.49	2.22	3.02	3.87	4.77	5.69	6.64	7.61	8.58
	20	0.36	0.81	1.37	2.06	2.82	3.63	4.50	5.39	6.32	7.27	8.23
	24	0.31	0.68	1.17	1.79	2.47	3.22	4.02	4.87	5.74	6.65	7.58
	28	0.27	0.59	1.03	1.58	2.20	2.88	3.62	4.41	5.24	6.11	6.99
	32	0.24	0.52	0.91	1.41	1.97	2.60	3.29	4.03	4.81	5.63	6.48
	36	0.21	0.46	0.82	1.27	1.78	2.36	3.00	3.70	4.43	5.21	6.02

Table 7-6 (continued)
Coefficients C for Eccentrically Loaded Bolt Groups
Angle = 60°

Available strength of a bolt group, ϕR_n or R_n/Ω, is determined with

$$R_n = C \times r_n$$

or

LRFD	ASD
$C_{min} = \frac{P_u}{\phi r_n}$	$C_{min} = \frac{\Omega P_a}{r_n}$

where

P = required force, P_u or P_a, kips
r_n = nominal strength per bolt, kips
e = eccentricity of P with respect to centroid of bolt group, in. (not tabulated, may be determined by geometry)
e_x = horizontal component of e, in.
s = bolt spacing, in.
C = coefficient tabulated below

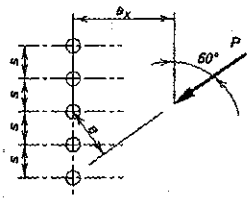

s, in.	e_x, in.	Number of Bolts in One Vertical Row, n										
		2	3	4	5	6	7	8	9	10	11	12
3	2	1.27	2.32	3.32	4.31	5.30	6.30	7.29	8.27	9.27	10.3	11.3
	3	1.05	2.05	3.02	4.00	4.98	5.97	6.96	7.94	8.94	9.93	10.9
	4	0.89	1.83	2.77	3.72	4.69	5.66	6.64	7.62	8.61	9.60	10.6
	5	0.77	1.65	2.54	3.47	4.41	5.37	6.34	7.32	8.29	9.28	10.3
	6	0.68	1.49	2.34	3.24	4.16	5.10	6.06	7.02	7.99	8.97	9.95
	7	0.61	1.37	2.17	3.03	3.93	4.85	5.79	6.74	7.71	8.67	9.64
	8	0.56	1.26	2.01	2.83	3.71	4.61	5.54	6.48	7.43	8.39	9.35
	9	0.51	1.16	1.87	2.66	3.51	4.39	5.30	6.23	7.17	8.12	9.07
	10	0.47	1.07	1.74	2.50	3.32	4.19	5.08	5.99	6.92	7.86	8.81
	12	0.40	0.93	1.52	2.22	3.00	3.82	4.67	5.55	6.45	7.37	8.30
	14	0.35	0.81	1.35	2.00	2.73	3.50	4.32	5.16	6.03	6.92	7.83
	16	0.32	0.72	1.21	1.81	2.49	3.23	4.00	4.81	5.65	6.51	7.40
	18	0.29	0.65	1.09	1.66	2.30	2.98	3.72	4.50	5.31	6.14	7.00
	20	0.26	0.58	1.00	1.53	2.12	2.77	3.47	4.21	4.99	5.80	6.63
	24	0.22	0.49	0.85	1.32	1.84	2.41	3.05	3.73	4.45	5.21	5.99
	28	0.19	0.42	0.74	1.15	1.61	2.13	2.71	3.34	4.00	4.70	5.44
	32	0.17	0.37	0.65	1.02	1.43	1.91	2.44	3.02	3.63	4.28	4.97
	36	0.15	0.33	0.59	0.92	1.29	1.72	2.21	2.74	3.31	3.92	4.57
6	2	1.60	2.65	3.65	4.64	5.64	6.63	7.62	8.61	9.60	10.6	11.6
	3	1.42	2.48	3.48	4.48	5.47	6.46	7.45	8.44	9.44	10.4	11.4
	4	1.27	2.32	3.32	4.31	5.30	6.30	7.29	8.27	9.27	10.3	11.3
	5	1.15	2.18	3.17	4.15	5.14	6.13	7.12	8.11	9.10	10.1	11.1
	6	1.05	2.05	3.02	4.00	4.98	5.97	6.96	7.94	8.94	9.93	10.9
	7	0.96	1.93	2.89	3.86	4.83	5.81	6.80	7.78	8.77	9.76	10.8
	8	0.89	1.83	2.77	3.72	4.69	5.66	6.64	7.62	8.61	9.60	10.6
	9	0.83	1.73	2.65	3.59	4.55	5.51	6.49	7.47	8.45	9.43	10.4
	10	0.77	1.65	2.54	3.47	4.41	5.37	6.34	7.32	8.29	9.28	10.3
	12	0.68	1.49	2.34	3.24	4.16	5.10	6.06	7.02	7.99	8.97	9.95
	14	0.61	1.37	2.17	3.03	3.93	4.85	5.79	6.74	7.71	8.67	9.64
	16	0.56	1.26	2.01	2.83	3.71	4.61	5.54	6.48	7.43	8.39	9.35
	18	0.51	1.16	1.87	2.66	3.51	4.39	5.30	6.23	7.17	8.12	9.07
	20	0.47	1.07	1.74	2.50	3.32	4.19	5.08	5.99	6.92	7.86	8.81
	24	0.40	0.93	1.52	2.22	3.00	3.82	4.67	5.55	6.45	7.37	8.30
	28	0.35	0.81	1.35	2.00	2.73	3.50	4.32	5.16	6.03	6.92	7.83
	32	0.32	0.72	1.21	1.81	2.49	3.23	4.00	4.81	5.65	6.51	7.40
	36	0.29	0.65	1.09	1.66	2.30	2.98	3.72	4.50	5.31	6.14	7.00

Table 7-6 (continued)
Coefficients C for Eccentrically Loaded Bolt Groups
Angle = 75°

Available strength of a bolt group, ϕR_n or R_n/Ω, is determined with

$$R_n = C \times r_n$$

or

LRFD	ASD
$C_{min} = \dfrac{P_u}{\phi r_n}$	$C_{min} = \dfrac{\Omega P_a}{r_n}$

where

P = required force, P_u or P_a, kips
r_n = nominal strength per bolt, kips
e = eccentricity of P with respect to centroid of bolt group, in. (not tabulated, may be determined by geometry)
e_x = horizontal component of e, in.
s = bolt spacing, in.
C = coefficient tabulated below

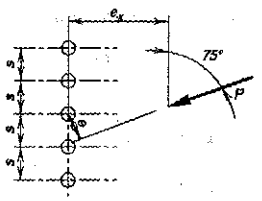

s, in.	e_x, in.	Number of Bolts in One Vertical Row, n										
		2	3	4	5	6	7	8	9	10	11	12
3	2	1.49	2.51	3.49	4.46	5.44	6.42	7.40	8.38	9.36	10.3	11.3
	3	1.32	2.33	3.30	4.27	5.24	6.21	7.18	8.15	9.13	10.1	11.1
	4	1.18	2.18	3.14	4.09	5.05	6.01	6.98	7.95	8.92	9.89	10.9
	5	1.07	2.04	2.99	3.93	4.88	5.84	6.79	7.75	8.72	9.68	10.7
	6	0.98	1.92	2.85	3.79	4.73	5.67	6.62	7.57	8.53	9.49	10.5
	7	0.90	1.82	2.73	3.65	4.58	5.52	6.46	7.40	8.36	9.31	10.3
	8	0.84	1.72	2.62	3.52	4.44	5.37	6.30	7.24	8.19	9.14	10.1
	9	0.78	1.63	2.51	3.40	4.31	5.23	6.16	7.09	8.03	8.97	9.92
	10	0.73	1.55	2.41	3.29	4.19	5.10	6.02	6.94	7.88	8.81	9.76
	12	0.65	1.41	2.23	3.08	3.95	4.84	5.75	6.66	7.59	8.51	9.45
	14	0.58	1.30	2.06	2.88	3.73	4.60	5.50	6.40	7.31	8.23	9.16
	16	0.53	1.20	1.92	2.70	3.52	4.38	5.26	6.15	7.05	7.96	8.88
	18	0.48	1.11	1.78	2.53	3.33	4.17	5.03	5.91	6.80	7.70	8.61
	20	0.44	1.03	1.66	2.38	3.16	3.97	4.82	5.69	6.56	7.45	8.35
	24	0.38	0.89	1.46	2.12	2.85	3.63	4.44	5.27	6.13	6.99	7.87
	28	0.34	0.79	1.29	1.90	2.59	3.33	4.11	4.91	5.73	6.57	7.43
	32	0.30	0.70	1.16	1.73	2.38	3.08	3.81	4.58	5.37	6.19	7.02
	36	0.27	0.62	1.05	1.58	2.19	2.85	3.55	4.28	5.05	5.84	6.65
6	2	1.71	2.72	3.70	4.69	5.67	6.66	7.64	8.79	9.78	10.8	11.7
	3	1.60	2.61	3.59	4.57	5.55	6.53	7.52	8.50	9.48	10.5	11.5
	4	1.49	2.51	3.49	4.46	5.44	6.42	7.40	8.38	9.36	10.3	11.3
	5	1.40	2.42	3.39	4.37	5.34	6.31	7.29	8.26	9.24	10.2	11.2
	6	1.32	2.33	3.30	4.27	5.24	6.21	7.18	8.15	9.13	10.1	11.1
	7	1.25	2.25	3.22	4.18	5.14	6.11	7.07	8.05	9.01	10.0	11.0
	8	1.18	2.18	3.14	4.09	5.05	6.01	6.98	7.95	8.92	9.89	10.9
	9	1.13	2.11	3.06	4.01	4.97	5.92	6.88	7.85	8.81	9.78	10.8
	10	1.07	2.04	2.99	3.93	4.88	5.84	6.79	7.75	8.72	9.68	10.7
	12	0.98	1.92	2.85	3.79	4.73	5.67	6.62	7.57	8.53	9.49	10.5
	14	0.90	1.82	2.73	3.65	4.58	5.52	6.46	7.40	8.36	9.31	10.3
	16	0.84	1.72	2.62	3.52	4.44	5.37	6.30	7.24	8.19	9.14	10.1
	18	0.78	1.63	2.51	3.40	4.31	5.23	6.16	7.09	8.03	8.97	9.92
	20	0.73	1.55	2.41	3.29	4.19	5.10	6.02	6.94	7.88	8.81	9.76
	24	0.65	1.41	2.23	3.08	3.95	4.84	5.75	6.66	7.59	8.51	9.45
	28	0.58	1.30	2.06	2.88	3.73	4.60	5.50	6.40	7.31	8.23	9.16
	32	0.53	1.20	1.92	2.70	3.52	4.38	5.26	6.15	7.05	7.96	8.88
	36	0.48	1.11	1.78	2.53	3.33	4.17	5.03	5.91	6.80	7.70	8.61

Table 7-7
Coefficients C for Eccentrically Loaded Bolt Groups
Angle = 0°

Available strength of a bolt group, ϕR_n or R_n/Ω, is determined with

$$R_n = C \times r_n$$

or

LRFD	ASD
$C_{min} = \dfrac{P_u}{\phi r_n}$	$C_{min} = \dfrac{\Omega P_a}{r_n}$

where

P = required force, P_u or P_a, kips
r_n = nominal strength per bolt, kips
e = eccentricity of P with respect to centroid of bolt group, in. (not tabulated, may be determined by geometry)
e_x = horizontal component of e, in.
s = bolt spacing, in.
C = coefficient tabulated below

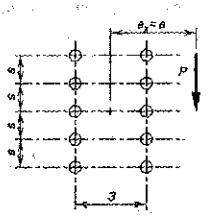

s, in.	e_x, in.	Number of Bolts in One Vertical Row, n											
		1	2	3	4	5	6	7	8	9	10	11	12
3	2	0.84	2.54	4.48	6.59	8.72	10.8	12.9	15.0	17.0	19.0	21.0	23.0
	3	0.65	2.03	3.68	5.67	7.77	9.91	12.1	14.2	16.3	18.3	20.4	22.5
	4	0.54	1.67	3.06	4.86	6.84	8.93	11.1	13.2	15.4	17.5	19.6	21.7
	5	0.45	1.42	2.59	4.21	6.01	8.00	10.1	12.2	14.4	16.5	18.7	20.8
	6	0.39	1.22	2.25	3.69	5.32	7.17	9.16	11.2	13.4	15.5	17.7	19.8
	7	0.35	1.08	1.99	3.27	4.74	6.46	8.33	10.3	12.4	14.5	16.7	18.8
	8	0.31	0.96	1.78	2.93	4.27	5.86	7.60	9.50	11.5	13.6	15.7	17.8
	9	0.28	0.86	1.60	2.65	3.87	5.34	6.97	8.75	10.7	12.7	14.7	16.8
	10	0.26	0.78	1.46	2.42	3.53	4.90	6.42	8.10	9.91	11.8	13.8	15.9
	12	0.22	0.66	1.24	2.06	3.01	4.19	5.51	7.01	8.63	10.4	12.2	14.2
	14	0.19	0.57	1.08	1.78	2.62	3.66	4.82	6.15	7.61	9.19	10.9	12.7
	16	0.17	0.51	0.95	1.57	2.32	3.24	4.27	5.47	6.79	8.23	9.78	11.4
	18	0.15	0.45	0.85	1.41	2.07	2.90	3.83	4.92	6.11	7.43	8.85	10.4
	20	0.14	0.41	0.77	1.27	1.88	2.63	3.48	4.47	5.55	6.76	8.07	9.48
	24	0.12	0.34	0.65	1.07	1.58	2.21	2.93	3.77	4.69	5.72	6.85	8.06
	28	0.10	0.29	0.56	0.92	1.36	1.90	2.53	3.25	4.05	4.95	5.93	7.00
	32	0.09	0.26	0.49	0.80	1.19	1.67	2.22	2.86	3.57	4.36	5.23	6.18
	36	0.08	0.23	0.43	0.72	1.06	1.49	1.98	2.55	3.18	3.90	4.67	5.52
	C', in.	2.94	8.33	15.8	26.0	38.7	54.2	72.2	93.1	117	143	172	204
6	2	0.84	3.24	5.39	7.47	9.51	11.5	13.5	15.5	17.5	19.5	21.5	23.4
	3	0.65	2.79	4.93	7.08	9.17	11.2	13.3	15.3	17.3	19.3	21.3	23.3
	4	0.54	2.41	4.44	6.60	8.75	10.9	12.9	15.0	17.0	19.1	21.1	23.1
	5	0.45	2.10	3.97	6.11	8.27	10.4	12.5	14.6	16.7	18.7	20.8	22.8
	6	0.39	1.85	3.55	5.62	7.77	9.93	12.1	14.2	16.3	18.4	20.4	22.5
	7	0.35	1.64	3.18	5.17	7.27	9.43	11.6	13.7	15.9	18.0	20.1	22.1
	8	0.31	1.47	2.87	4.75	6.79	8.92	11.1	13.3	15.4	17.5	19.6	21.7
	9	0.28	1.34	2.61	4.39	6.34	8.43	10.6	12.7	14.9	17.1	19.2	21.3
	10	0.26	1.22	2.39	4.06	5.92	7.96	10.1	12.2	14.4	16.6	18.7	20.9
	12	0.22	1.04	2.04	3.52	5.20	7.10	9.12	11.2	13.4	15.5	17.7	19.9
	14	0.19	0.90	1.77	3.09	4.61	6.36	8.27	10.3	12.4	14.5	16.7	18.9
	16	0.17	0.80	1.57	2.75	4.12	5.74	7.52	9.44	11.5	13.5	15.7	17.8
	18	0.15	0.71	1.41	2.48	3.72	5.21	6.87	8.68	10.6	12.6	14.7	16.8
	20	0.14	0.64	1.28	2.25	3.38	4.77	6.31	8.02	9.85	11.8	13.8	15.9
	24	0.12	0.54	1.07	1.90	2.86	4.06	5.40	6.91	8.55	10.3	12.2	14.1
	28	0.10	0.46	0.93	1.64	2.47	3.52	4.70	6.05	7.52	9.12	10.8	12.6
	32	0.09	0.41	0.81	1.44	2.18	3.11	4.16	5.37	6.69	8.15	9.71	11.4
	36	0.08	0.36	0.73	1.29	1.94	2.78	3.72	4.81	6.02	7.34	8.78	10.3
	C', in.	2.94	13.2	26.5	47.0	71.4	103	138	180	226	279	337	400

Table 7-7 (continued)
Coefficients C for Eccentrically Loaded Bolt Groups
Angle = 15°

Available strength of a bolt group, ϕR_n or R_n/Ω, is determined with

$$R_n = C \times r_n$$

or

LRFD	ASD
$C_{min} = \dfrac{P_u}{\phi r_n}$	$C_{min} = \dfrac{\Omega P_a}{r_n}$

where

P = required force, P_u or P_a, kips
r_n = nominal strength per bolt, kips
e = eccentricity of P with respect to centroid of bolt group, in. (not tabulated, may be determined by geometry)
e_x = horizontal component of e, in.
s = bolt spacing, in.
C = coefficient tabulated below

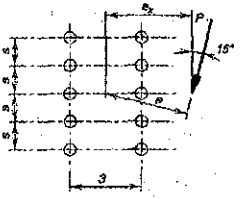

s, in.	e_x, in.	Number of Bolts in One Vertical Row, n											
		1	2	3	4	5	6	7	8	9	10	11	12
3	2	0.87	2.54	4.47	6.54	8.63	10.7	12.8	14.8	16.9	18.9	20.9	22.9
	3	0.68	2.04	3.71	5.63	7.69	9.80	11.9	14.0	16.1	18.2	20.2	22.3
	4	0.55	1.69	3.11	4.85	6.79	8.84	10.9	13.1	15.2	17.3	19.4	21.5
	5	0.47	1.44	2.66	4.21	6.00	7.94	9.98	12.1	14.2	16.3	18.4	20.5
	6	0.41	1.25	2.31	3.70	5.34	7.15	9.09	11.1	13.2	15.3	17.4	19.6
	7	0.36	1.10	2.04	3.29	4.79	6.46	8.30	10.2	12.3	14.3	16.4	18.6
	8	0.32	0.98	1.83	2.96	4.32	5.87	7.60	9.45	11.4	13.4	15.5	17.6
	9	0.29	0.88	1.65	2.68	3.94	5.37	6.99	8.74	10.6	12.6	14.6	16.6
	10	0.27	0.81	1.51	2.45	3.61	4.93	6.45	8.11	9.88	11.8	13.7	15.7
	12	0.23	0.68	1.28	2.09	3.08	4.24	5.58	7.05	8.66	10.4	12.2	14.1
	14	0.20	0.59	1.11	1.82	2.69	3.71	4.90	6.21	7.67	9.23	10.9	12.7
	16	0.17	0.52	0.98	1.61	2.38	3.29	4.36	5.54	6.86	8.29	9.83	11.5
	18	0.16	0.47	0.88	1.44	2.13	2.96	3.92	4.99	6.20	7.51	8.93	10.4
	20	0.14	0.42	0.79	1.31	1.93	2.68	3.56	4.54	5.65	6.85	8.17	9.57
	24	0.12	0.35	0.67	1.10	1.62	2.26	3.00	3.84	4.79	5.82	6.96	8.17
	28	0.10	0.30	0.57	0.94	1.40	1.95	2.60	3.32	4.15	5.05	6.05	7.12
	32	0.09	0.27	0.50	0.83	1.23	1.72	2.28	2.93	3.66	4.46	5.34	6.29
	36	0.08	0.24	0.45	0.74	1.10	1.53	2.04	2.61	3.27	3.98	4.78	5.64
6	2	0.87	3.21	5.35	7.42	9.45	11.5	13.5	15.5	17.4	19.4	21.4	23.4
	3	0.68	2.76	4.88	7.00	9.09	11.1	13.2	15.2	17.2	19.2	21.2	23.2
	4	0.55	2.38	4.40	6.53	8.65	10.7	12.8	14.9	16.9	18.9	20.9	22.9
	5	0.47	2.07	3.96	6.04	8.17	10.3	12.4	14.5	16.5	18.6	20.6	22.6
	6	0.41	1.83	3.56	5.56	7.67	9.80	11.9	14.0	16.1	18.2	20.3	22.3
	7	0.36	1.63	3.22	5.12	7.19	9.30	11.4	13.6	15.7	17.8	19.9	21.9
	8	0.32	1.47	2.92	4.73	6.72	8.81	10.9	13.1	15.2	17.3	19.4	21.5
	9	0.29	1.34	2.66	4.37	6.29	8.33	10.4	12.6	14.7	16.8	18.9	21.0
	10	0.27	1.23	2.45	4.05	5.90	7.88	9.95	12.1	14.2	16.3	18.5	20.6
	12	0.23	1.05	2.09	3.53	5.21	7.06	9.04	11.1	13.2	15.3	17.5	19.6
	14	0.20	0.91	1.83	3.11	4.64	6.35	8.22	10.2	12.2	14.3	16.5	18.6
	16	0.17	0.81	1.62	2.78	4.17	5.75	7.51	9.38	11.4	13.4	15.5	17.6
	18	0.16	0.72	1.45	2.50	3.77	5.24	6.88	8.66	10.5	12.5	14.5	16.6
	20	0.14	0.66	1.32	2.28	3.45	4.80	6.34	8.02	9.82	11.7	13.7	15.7
	24	0.12	0.55	1.11	1.93	2.93	4.10	5.46	6.95	8.57	10.3	12.1	14.0
	28	0.10	0.48	0.96	1.67	2.54	3.57	4.78	6.11	7.58	9.15	10.8	12.6
	32	0.09	0.42	0.84	1.47	2.24	3.16	4.24	5.44	6.77	8.21	9.75	11.4
	36	0.08	0.37	0.75	1.32	2.00	2.83	3.80	4.89	6.10	7.42	8.85	10.4

Table 7-7 (continued)
Coefficients C for Eccentrically Loaded Bolt Groups
Angle = 30°

Available strength of a bolt group, ϕR_n or R_n/Ω, is determined with

$$R_n = C \times r_n$$

or

LRFD	ASD
$C_{min} = \dfrac{P_u}{\phi r_n}$	$C_{min} = \dfrac{\Omega P_a}{r_n}$

where

P = required force, P_u or P_a, kips
r_n = nominal strength per bolt, kips
e = eccentricity of P with respect to centroid of bolt group, in. (not tabulated, may be determined by geometry)
e_x = horizontal component of e, in.
s = bolt spacing, in.
C = coefficient tabulated below

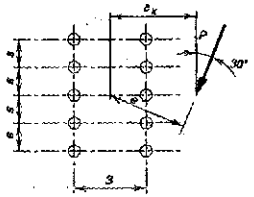

s, in.	e_x, in.	Number of Bolts in One Vertical Row, n											
		1	2	3	4	5	6	7	8	9	10	11	12
3	2	0.97	2.60	4.52	6.54	8.59	10.6	12.7	14.7	16.7	18.8	20.8	22.8
	3	0.75	2.12	3.83	5.71	7.71	9.75	11.8	13.9	15.9	18.0	20.0	22.1
	4	0.62	1.78	3.29	4.99	6.88	8.87	10.9	13.0	15.1	17.1	19.2	21.3
	5	0.52	1.53	2.85	4.39	6.16	8.06	10.0	12.1	14.1	16.2	18.3	20.4
	6	0.45	1.34	2.51	3.89	5.54	7.33	9.23	11.2	13.2	15.3	17.3	19.4
	7	0.40	1.19	2.23	3.48	5.01	6.70	8.51	10.4	12.4	14.4	16.4	18.5
	8	0.36	1.07	2.00	3.15	4.57	6.14	7.86	9.68	11.6	13.6	15.6	17.6
	9	0.32	0.97	1.81	2.87	4.19	5.66	7.28	9.02	10.9	12.8	14.7	16.7
	10	0.30	0.88	1.66	2.64	3.87	5.24	6.77	8.43	10.2	12.0	13.9	15.9
	12	0.25	0.75	1.41	2.27	3.34	4.54	5.92	7.43	9.04	10.8	12.5	14.4
	14	0.22	0.65	1.23	1.98	2.93	3.99	5.24	6.61	8.09	9.67	11.4	13.1
	16	0.19	0.58	1.08	1.76	2.60	3.56	4.69	5.94	7.30	8.77	10.3	12.0
	18	0.17	0.52	0.97	1.58	2.34	3.21	4.24	5.38	6.64	8.0	9.45	11.0
	20	0.16	0.47	0.88	1.43	2.12	2.92	3.87	4.92	6.08	7.3	8.70	10.1
	24	0.13	0.39	0.74	1.21	1.79	2.48	3.29	4.18	5.19	6.3	7.48	8.75
	28	0.12	0.34	0.64	1.04	1.55	2.14	2.85	3.63	4.52	5.5	6.54	7.68
	32	0.10	0.30	0.56	0.92	1.36	1.89	2.51	3.21	4.00	4.9	5.81	6.83
	36	0.09	0.26	0.50	0.82	1.21	1.69	2.25	2.87	3.59	4.4	5.22	6.15
6	2	0.97	3.20	5.31	7.37	9.39	11.4	13.4	15.4	17.4	19.4	21.3	23.3
	3	0.75	2.75	4.86	6.95	9.01	11.1	13.1	15.1	17.1	19.1	21.1	23.1
	4	0.62	2.39	4.42	6.49	8.57	10.6	12.7	14.7	16.8	18.8	20.8	22.8
	5	0.52	2.10	4.02	6.04	8.11	10.2	12.3	14.3	16.4	18.4	20.4	22.5
	6	0.45	1.87	3.67	5.61	7.66	9.73	11.8	13.9	16.0	18.0	20.1	22.1
	7	0.40	1.69	3.36	5.21	7.21	9.27	11.4	13.4	15.5	17.6	19.6	21.7
	8	0.36	1.53	3.08	4.84	6.79	8.82	10.9	13.0	15.1	17.1	19.2	21.3
	9	0.32	1.40	2.84	4.51	6.40	8.39	10.4	12.5	14.6	16.7	18.7	20.8
	10	0.30	1.29	2.63	4.21	6.04	7.98	9.99	12.0	14.1	16.2	18.3	20.4
	12	0.25	1.12	2.28	3.70	5.39	7.23	9.16	11.2	13.2	15.3	17.3	19.4
	14	0.22	0.98	2.00	3.29	4.86	6.57	8.41	10.3	12.3	14.4	16.4	18.5
	16	0.19	0.87	1.78	2.95	4.40	6.01	7.75	9.6	11.5	13.5	15.5	17.6
	18	0.17	0.79	1.60	2.68	4.02	5.52	7.17	8.9	10.8	12.7	14.7	16.7
	20	0.16	0.71	1.45	2.45	3.70	5.09	6.65	8.3	10.1	12.0	13.9	15.9
	24	0.13	0.60	1.23	2.08	3.17	4.39	5.79	7.3	8.95	10.7	12.5	14.4
	28	0.12	0.52	1.06	1.82	2.77	3.85	5.11	6.5	7.99	9.59	11.3	13.0
	32	0.10	0.46	0.93	1.61	2.45	3.42	4.56	5.8	7.20	8.68	10.3	11.9
	36	0.09	0.41	0.83	1.44	2.20	3.08	4.12	5.3	6.53	7.91	9.37	10.9

Table 7-7 (continued)
Coefficients C for Eccentrically Loaded Bolt Groups
Angle = 45°

Available strength of a bolt group, ϕR_n or R_n/Ω, is determined with

$$R_n = C \times r_n$$

or

LRFD	ASD
$C_{min} = \frac{P_u}{\phi r_n}$	$C_{min} = \frac{\Omega P_a}{r_n}$

where

P = required force, P_u or P_a, kips
r_n = nominal strength per bolt, kips
e = eccentricity of P with respect to centroid of bolt group, in. (not tabulated, may be determined by geometry)
e_x = horizontal component of e, in.
s = bolt spacing, in.
C = coefficient tabulated below

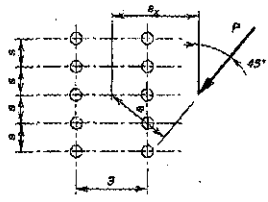

s, in.	e_x, in.	Number of Bolts in One Vertical Row, n											
		1	2	3	4	5	6	7	8	9	10	11	12
3	2	1.17	2.79	4.67	6.62	8.61	10.6	12.6	14.6	16.6	18.6	20.6	22.6
	3	0.92	2.32	4.06	5.92	7.86	9.83	11.8	13.9	15.9	17.9	19.9	21.9
	4	0.75	1.99	3.57	5.31	7.16	9.09	11.1	13.1	15.1	17.1	19.1	21.1
	5	0.64	1.74	3.17	4.78	6.53	8.39	10.3	12.3	14.3	16.3	18.3	20.3
	6	0.55	1.54	2.84	4.33	5.98	7.76	9.63	11.6	13.5	15.5	17.5	19.5
	7	0.49	1.38	2.57	3.93	5.49	7.20	9.00	10.9	12.8	14.8	16.7	18.7
	8	0.44	1.25	2.33	3.60	5.06	6.70	8.43	10.3	12.1	14.0	16.0	18.0
	9	0.40	1.14	2.13	3.31	4.69	6.25	7.91	9.67	11.5	13.4	15.3	17.2
	10	0.36	1.05	1.96	3.06	4.36	5.85	7.44	9.14	10.9	12.7	14.6	16.5
	12	0.31	0.90	1.68	2.65	3.83	5.17	6.63	8.20	9.86	11.6	13.4	15.2
	14	0.27	0.78	1.47	2.33	3.40	4.61	5.95	7.41	8.97	10.6	12.3	14.1
	16	0.24	0.69	1.31	2.08	3.05	4.16	5.38	6.74	8.20	9.75	11.4	13.1
	18	0.21	0.62	1.17	1.88	2.76	3.77	4.91	6.18	7.55	9.00	10.5	12.1
	20	0.19	0.56	1.06	1.71	2.52	3.45	4.51	5.69	6.97	8.34	9.80	11.3
	24	0.16	0.48	0.90	1.45	2.14	2.94	3.87	4.91	6.04	7.26	8.57	9.95
	28	0.14	0.41	0.77	1.26	1.86	2.56	3.38	4.30	5.30	6.41	7.59	8.85
	32	0.12	0.36	0.68	1.11	1.64	2.27	3.00	3.82	4.73	5.73	6.80	7.94
	36	0.11	0.32	0.61	0.99	1.47	2.03	2.70	3.44	4.26	5.17	6.15	7.20
6	2	1.17	3.24	5.30	7.32	9.33	11.3	13.3	15.3	17.3	19.3	21.3	23.2
	3	0.92	2.84	4.90	6.93	8.96	11.0	13.0	15.0	17.0	19.0	21.0	23.0
	4	0.75	2.51	4.52	6.53	8.56	10.6	12.6	14.6	16.6	18.6	20.6	22.6
	5	0.64	2.24	4.17	6.15	8.15	10.2	12.2	14.2	16.2	18.3	20.3	22.3
	6	0.55	2.03	3.86	5.78	7.76	9.77	11.8	13.8	15.8	17.9	19.9	21.9
	7	0.49	1.85	3.59	5.45	7.39	9.38	11.4	13.4	15.4	17.5	19.5	21.5
	8	0.44	1.70	3.35	5.13	7.03	9.00	11.0	13.0	15.0	17.1	19.1	21.1
	9	0.40	1.57	3.13	4.85	6.70	8.63	10.6	12.6	14.6	16.7	18.7	20.7
	10	0.36	1.46	2.94	4.58	6.38	8.28	10.2	12.2	14.2	16.3	18.3	20.3
	12	0.31	1.28	2.60	4.11	5.81	7.64	9.54	11.5	13.5	15.5	17.5	19.5
	14	0.27	1.13	2.32	3.71	5.31	7.06	8.89	10.8	12.7	14.7	16.7	18.7
	16	0.24	1.01	2.09	3.36	4.88	6.55	8.31	10.2	12.0	14.0	15.9	17.9
	18	0.21	0.92	1.90	3.07	4.50	6.09	7.78	9.56	11.4	13.3	15.2	17.2
	20	0.19	0.84	1.73	2.83	4.18	5.69	7.31	9.02	10.8	12.7	14.6	16.5
	24	0.16	0.72	1.47	2.43	3.64	5.00	6.48	8.08	9.76	11.5	13.3	15.2
	28	0.14	0.62	1.28	2.13	3.22	4.45	5.80	7.28	8.86	10.5	12.2	14.0
	32	0.12	0.55	1.13	1.90	2.88	3.99	5.24	6.62	8.09	9.65	11.3	13.0
	36	0.11	0.49	1.01	1.71	2.61	3.62	4.77	6.05	7.43	8.90	10.4	12.1

Table 7-7 (continued)
Coefficients C for Eccentrically Loaded Bolt Groups
Angle = 60°

Available strength of a bolt group, ϕR_n or R_n/Ω, is determined with

$$R_n = C \times r_n$$

or

LRFD	ASD
$C_{min} = \dfrac{P_u}{\phi r_n}$	$C_{min} = \dfrac{\Omega P_a}{r_n}$

where

P = required force, P_u or P_a, kips
r_n = nominal strength per bolt, kips
e = eccentricity of P with respect to centroid of bolt group, in. (not tabulated, may be determined by geometry)
e_x = horizontal component of e, in.
s = bolt spacing, in.
C = coefficient tabulated below

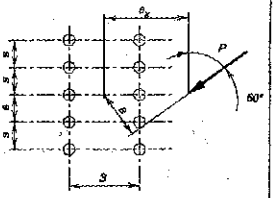

s, in.	e_x, in.	Number of Bolts in One Vertical Row, n											
		1	2	3	4	5	6	7	8	9	10	11	12
3	2	1.51	3.17	4.97	6.85	8.77	10.7	12.7	14.6	16.6	18.6	20.6	22.5
	3	1.24	2.76	4.47	6.30	8.19	10.1	12.0	14.0	16.0	17.9	19.9	21.9
	4	1.04	2.43	4.04	5.81	7.65	9.53	11.5	13.4	15.3	17.3	19.3	21.2
	5	0.89	2.16	3.70	5.39	7.17	9.01	10.9	12.8	14.7	16.7	18.6	20.6
	6	0.77	1.95	3.40	5.01	6.73	8.52	10.4	12.3	14.2	16.1	18.0	20.0
	7	0.68	1.77	3.13	4.67	6.33	8.07	9.88	11.7	13.6	15.5	17.4	19.4
	8	0.61	1.62	2.90	4.37	5.96	7.65	9.42	11.2	13.1	15.0	16.9	18.8
	9	0.56	1.49	2.70	4.09	5.62	7.26	8.98	10.8	12.6	14.5	16.3	18.2
	10	0.51	1.38	2.52	3.84	5.31	6.89	8.58	10.3	12.1	14.0	15.8	17.7
	12	0.43	1.20	2.21	3.40	4.76	6.25	7.85	9.53	11.3	13.0	14.9	16.7
	14	0.38	1.06	1.96	3.05	4.30	5.71	7.23	8.83	10.5	12.2	14.0	15.8
	16	0.34	0.95	1.76	2.75	3.92	5.24	6.68	8.20	9.79	11.5	13.2	14.9
	18	0.30	0.85	1.60	2.51	3.59	4.84	6.19	7.64	9.16	10.8	12.4	14.1
	20	0.27	0.78	1.46	2.30	3.32	4.48	5.76	7.14	8.60	10.1	11.7	13.4
	24	0.23	0.66	1.24	1.97	2.87	3.90	5.04	6.29	7.64	9.06	10.6	12.1
	28	0.20	0.57	1.07	1.72	2.52	3.44	4.47	5.61	6.85	8.17	9.55	11.0
	32	0.18	0.50	0.95	1.52	2.24	3.07	4.01	5.06	6.20	7.41	8.70	10.1
	36	0.16	0.45	0.85	1.37	2.02	2.77	3.63	4.59	5.65	6.77	7.98	9.26
6	2	1.51	3.39	5.36	7.33	9.31	11.3	13.3	15.2	17.2	19.2	21.2	23.2
	3	1.24	3.08	5.04	7.01	8.98	11.0	12.9	14.9	16.9	18.9	20.9	22.8
	4	1.04	2.80	4.73	6.69	8.66	10.6	12.6	14.6	16.6	18.6	20.5	22.5
	5	0.89	2.57	4.45	6.39	8.35	10.3	12.3	14.3	16.2	18.2	20.2	22.2
	6	0.77	2.37	4.20	6.11	8.05	10.0	12.0	13.9	15.9	17.9	19.9	21.8
	7	0.68	2.19	3.98	5.85	7.76	9.70	11.7	13.6	15.6	17.6	19.5	21.5
	8	0.61	2.04	3.77	5.61	7.49	9.41	11.4	13.3	15.3	17.2	19.2	21.2
	9	0.56	1.91	3.59	5.38	7.24	9.13	11.1	13.0	15.0	16.9	18.9	20.9
	10	0.51	1.80	3.42	5.17	7.00	8.87	10.8	12.7	14.7	16.6	18.6	20.5
	12	0.43	1.60	3.11	4.78	6.54	8.37	10.2	12.1	14.1	16.0	18.0	19.9
	14	0.38	1.44	2.85	4.43	6.13	7.91	9.74	11.6	13.5	15.4	17.4	19.3
	16	0.34	1.31	2.63	4.12	5.74	7.48	9.27	11.1	13.0	14.9	16.8	18.7
	18	0.30	1.20	2.43	3.84	5.40	7.08	8.84	10.7	12.5	14.4	16.3	18.2
	20	0.27	1.10	2.26	3.58	5.08	6.71	8.43	10.2	12.0	13.9	15.7	17.6
	24	0.23	0.95	1.97	3.15	4.53	6.06	7.69	9.39	11.2	12.9	14.8	16.6
	28	0.20	0.84	1.73	2.80	4.08	5.52	7.06	8.68	10.4	12.1	13.9	15.7
	32	0.18	0.74	1.54	2.52	3.71	5.05	6.51	8.05	9.66	11.3	13.1	14.8
	36	0.16	0.67	1.39	2.28	3.39	4.65	6.02	7.49	9.03	10.7	12.3	14.0

Table 7-7 (continued)
Coefficients C for Eccentrically Loaded Bolt Groups
Angle = 75°

Available strength of a bolt group, ϕR_n or R_n/Ω, is determined with

$$R_n = C \times r_n$$

or

LRFD	ASD
$C_{min} = \frac{P_u}{\phi r_n}$	$C_{min} = \frac{\Omega P_a}{r_n}$

where

P = required force, P_u or P_a, kips
r_n = nominal strength per bolt, kips
e = eccentricity of P with respect to centroid of bolt group, in. (not tabulated, may be determined by geometry)
e_x = horizontal component of e, in.
s = bolt spacing, in.
C = coefficient tabulated below

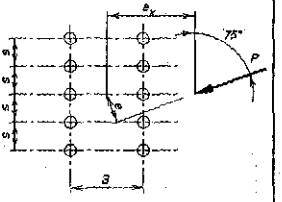

s, in.	e_x, in.	Number of Bolts in One Vertical Row, n											
		1	2	3	4	5	6	7	8	9	10	11	12
3	2	1.84	3.63	5.44	7.29	9.17	11.1	13.0	14.9	16.9	18.8	20.8	22.7
	3	1.71	3.41	5.17	6.97	8.82	10.7	12.6	14.5	16.4	18.4	20.3	22.3
	4	1.57	3.19	4.90	6.67	8.50	10.4	12.2	14.1	16.0	18.0	19.9	21.8
	5	1.44	2.98	4.65	6.39	8.19	10.0	11.9	13.8	15.7	17.6	19.5	21.4
	6	1.31	2.79	4.41	6.12	7.90	9.71	11.6	13.4	15.3	17.2	19.1	21.0
	7	1.20	2.61	4.19	5.88	7.62	9.42	11.3	13.1	15.0	16.9	18.8	20.7
	8	1.10	2.45	3.99	5.65	7.37	9.14	11.0	12.8	14.7	16.5	18.4	20.3
	9	1.01	2.31	3.81	5.43	7.14	8.89	10.7	12.5	14.3	16.2	18.1	20.0
	10	0.93	2.18	3.63	5.23	6.91	8.65	10.4	12.2	14.1	15.9	17.8	19.6
	12	0.81	1.95	3.33	4.86	6.49	8.19	9.94	11.7	13.5	15.3	17.2	19.0
	14	0.71	1.77	3.06	4.53	6.11	7.76	9.47	11.2	13.0	14.8	16.6	18.4
	16	0.63	1.61	2.83	4.23	5.75	7.36	9.03	10.8	12.5	14.3	16.1	17.9
	18	0.57	1.48	2.63	3.96	5.42	6.98	8.61	10.3	12.0	13.8	15.6	17.4
	20	0.52	1.36	2.45	3.72	5.12	6.63	8.23	9.88	11.6	13.3	15.1	16.9
	24	0.44	1.18	2.15	3.30	4.60	6.02	7.53	9.12	10.8	12.4	14.2	15.9
	28	0.38	1.04	1.91	2.95	4.16	5.49	6.93	8.45	10.0	11.7	13.3	15.0
	32	0.34	0.92	1.71	2.67	3.78	5.04	6.41	7.86	9.37	10.9	12.6	14.2
	36	0.30	0.83	1.55	2.43	3.47	4.65	5.94	7.32	8.78	10.3	11.9	13.5
6	2	1.84	3.66	5.55	7.48	9.42	11.4	13.3	15.3	17.6	19.6	21.5	23.5
	3	1.71	3.49	5.36	7.27	9.20	11.2	13.1	15.1	17.0	19.0	21.0	22.9
	4	1.57	3.32	5.18	7.08	9.00	10.9	12.9	14.8	16.8	18.7	20.7	22.7
	5	1.44	3.16	5.01	6.89	8.81	10.7	12.7	14.6	16.6	18.5	20.5	22.4
	6	1.31	3.02	4.84	6.72	8.62	10.5	12.5	14.4	16.3	18.3	20.2	22.2
	7	1.20	2.88	4.69	6.55	8.44	10.4	12.3	14.2	16.1	18.1	20.0	22.0
	8	1.10	2.75	4.54	6.39	8.27	10.2	12.1	14.0	15.9	17.9	19.8	21.8
	9	1.01	2.63	4.40	6.24	8.11	10.0	11.9	13.8	15.7	17.7	19.6	21.5
	10	0.93	2.52	4.27	6.09	7.95	9.83	11.7	13.6	15.6	17.5	19.4	21.3
	12	0.81	2.32	4.03	5.82	7.66	9.52	11.4	13.3	15.2	17.1	19.0	20.9
	14	0.71	2.15	3.82	5.57	7.38	9.22	11.1	13.0	14.9	16.7	18.7	20.6
	16	0.63	2.00	3.62	5.35	7.13	8.95	10.8	12.7	14.5	16.4	18.3	20.2
	18	0.57	1.87	3.44	5.14	6.90	8.69	10.5	12.4	14.2	16.1	18.0	19.9
	20	0.52	1.75	3.28	4.94	6.67	8.45	10.3	12.1	13.9	15.8	17.7	19.5
	24	0.44	1.55	2.98	4.57	6.24	7.98	9.75	11.6	13.4	15.2	17.1	18.9
	28	0.38	1.40	2.74	4.24	5.85	7.54	9.28	11.1	12.9	14.7	16.5	18.3
	32	0.34	1.27	2.52	3.95	5.49	7.13	8.83	10.6	12.4	14.1	16.0	17.8
	36	0.30	1.16	2.33	3.68	5.16	6.75	8.41	10.1	11.9	13.7	15.4	17.3

Table 7-8
Coefficients C for Eccentrically Loaded Bolt Groups
Angle = 0°

Available strength of a bolt group, ϕR_n or R_n/Ω, is determined with

$$R_n = C \times r_n$$

or

LRFD	ASD
$C_{min} = \frac{P_u}{\phi r_n}$	$C_{min} = \frac{\Omega P_a}{r_n}$

where

P = required force, P_u or P_a, kips
r_n = nominal strength per bolt, kips
e = eccentricity of P with respect to centroid of bolt group, in. (not tabulated, may be determined by geometry)
e_x = horizontal component of e, in.
s = bolt spacing, in.
C = coefficient tabulated below

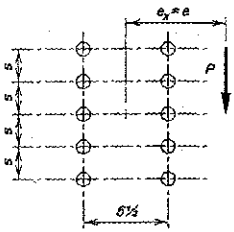

s, in.	e_x, in.	Number of Bolts in One Vertical Row, n											
		1	2	3	4	5	6	7	8	9	10	11	12
3	2	1.14	2.75	4.59	6.61	8.69	10.8	12.9	14.9	17.0	19.0	21.0	23.0
	3	0.94	2.32	3.92	5.80	7.82	9.90	12.0	14.1	16.2	18.3	20.4	22.4
	4	0.80	1.99	3.39	5.10	6.98	9.00	11.1	13.2	15.3	17.4	19.6	21.7
	5	0.70	1.74	2.96	4.51	6.24	8.15	10.2	12.3	14.4	16.5	18.6	20.8
	6	0.62	1.54	2.62	4.03	5.60	7.39	9.30	11.3	13.4	15.5	17.7	19.8
	7	0.55	1.38	2.36	3.63	5.07	6.72	8.53	10.5	12.5	14.6	16.7	18.8
	8	0.50	1.25	2.14	3.30	4.61	6.15	7.84	9.67	11.6	13.6	15.7	17.8
	9	0.46	1.14	1.96	3.01	4.22	5.66	7.23	8.97	10.8	12.8	14.8	16.9
	10	0.42	1.04	1.80	2.78	3.89	5.23	6.70	8.34	10.1	12.0	13.9	15.9
	12	0.37	0.90	1.55	2.39	3.36	4.53	5.82	7.28	8.87	10.6	12.4	14.3
	14	0.32	0.79	1.36	2.10	2.96	3.99	5.13	6.44	7.87	9.42	11.1	12.8
	16	0.29	0.70	1.21	1.87	2.64	3.55	4.58	5.76	7.05	8.47	9.99	11.6
	18	0.26	0.63	1.09	1.68	2.37	3.20	4.14	5.21	6.38	7.68	9.08	10.6
	20	0.24	0.57	0.99	1.53	2.16	2.91	3.77	4.75	5.82	7.02	8.30	9.69
	24	0.20	0.48	0.84	1.29	1.83	2.46	3.19	4.03	4.94	5.97	7.07	8.28
	28	0.18	0.42	0.73	1.11	1.58	2.13	2.77	3.49	4.29	5.19	6.15	7.21
	32	0.16	0.37	0.64	0.98	1.39	1.88	2.44	3.08	3.79	4.58	5.44	6.38
	36	0.14	0.33	0.57	0.88	1.24	1.68	2.18	2.75	3.39	4.10	4.87	5.72
	C', in.	5.40	12.3	21.2	32.3	45.8	61.8	80.3	102	125	152	181	213
6	2	1.14	3.25	5.37	7.45	9.49	11.5	13.5	15.5	17.5	19.5	21.4	23.4
	3	0.94	2.86	4.93	7.05	9.14	11.2	13.2	15.3	17.3	19.3	21.3	23.3
	4	0.80	2.52	4.47	6.59	8.72	10.8	12.9	15.0	17.0	19.0	21.0	23.1
	5	0.70	2.24	4.04	6.12	8.25	10.4	12.5	14.6	16.7	18.7	20.8	22.8
	6	0.62	2.00	3.65	5.66	7.77	9.91	12.1	14.2	16.3	18.4	20.4	22.5
	7	0.55	1.80	3.31	5.23	7.29	9.42	11.6	13.7	15.8	17.9	20.0	22.1
	8	0.50	1.64	3.02	4.84	6.83	8.93	11.1	13.2	15.4	17.5	19.6	21.7
	9	0.46	1.50	2.77	4.49	6.39	8.45	10.6	12.7	14.9	17.0	19.2	21.3
	10	0.42	1.38	2.56	4.18	5.99	7.99	10.1	12.2	14.4	16.5	18.7	20.8
	12	0.37	1.19	2.21	3.65	5.29	7.16	9.15	11.2	13.4	15.5	17.7	19.8
	14	0.32	1.04	1.95	3.24	4.72	6.44	8.32	10.3	12.4	14.5	16.7	18.8
	16	0.29	0.93	1.74	2.90	4.24	5.83	7.59	9.48	11.5	13.6	15.7	17.8
	18	0.26	0.84	1.57	2.62	3.84	5.31	6.95	8.74	10.7	12.6	14.7	16.8
	20	0.24	0.76	1.43	2.39	3.50	4.87	6.39	8.08	9.89	11.8	13.8	15.9
	24	0.20	0.64	1.21	2.02	2.98	4.16	5.49	6.99	8.61	10.4	12.2	14.1
	28	0.18	0.55	1.05	1.76	2.59	3.63	4.80	6.13	7.59	9.18	10.9	12.7
	32	0.16	0.49	0.93	1.55	2.29	3.21	4.25	5.45	6.77	8.21	9.76	11.4
	36	0.14	0.43	0.83	1.38	2.05	2.88	3.81	4.90	6.09	7.41	8.83	10.4
	C', in.	5.40	16.0	30.6	51.0	76.2	107	143	185	232	284	342	406

Table 7-8 (continued)
Coefficients C for Eccentrically Loaded Bolt Groups
Angle = 15°

Available strength of a bolt group, ϕR_n or R_n/Ω, is determined with

$$R_n = C \times r_n$$

or

LRFD	ASD
$C_{min} = \dfrac{P_u}{\phi r_n}$	$C_{min} = \dfrac{\Omega P_a}{r_n}$

where

P = required force, P_u or P_a, kips
r_n = nominal strength per bolt, kips
e = eccentricity of P with respect to centroid of bolt group, in. (not tabulated, may be determined by geometry)
e_x = horizontal component of e, in.
s = bolt spacing, in.
C = coefficient tabulated below

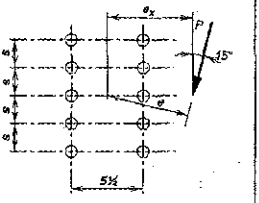

s, in.	e_x, in.	Number of Bolts in One Vertical Row, n											
		1	2	3	4	5	6	7	8	9	10	11	12
3	2	1.18	2.78	4.61	6.59	8.64	10.7	12.8	14.8	16.8	18.9	20.9	22.9
	3	0.97	2.34	3.97	5.80	7.78	9.83	11.9	14.0	16.1	18.1	20.2	22.2
	4	0.83	2.02	3.45	5.11	6.97	8.94	11.0	13.1	15.2	17.3	19.3	21.4
	5	0.72	1.77	3.03	4.54	6.26	8.12	10.1	12.1	14.2	16.3	18.4	20.5
	6	0.64	1.57	2.70	4.06	5.65	7.39	9.27	11.2	13.3	15.4	17.5	19.6
	7	0.57	1.41	2.43	3.66	5.13	6.74	8.52	10.4	12.4	14.4	16.5	18.6
	8	0.52	1.28	2.20	3.34	4.68	6.18	7.86	9.65	11.6	13.5	15.6	17.6
	9	0.48	1.17	2.01	3.06	4.30	5.70	7.27	8.97	10.8	12.7	14.7	16.7
	10	0.44	1.07	1.85	2.82	3.98	5.27	6.76	8.36	10.1	11.9	13.8	15.8
	12	0.38	0.93	1.60	2.44	3.44	4.58	5.90	7.34	8.91	10.6	12.4	14.2
	14	0.33	0.81	1.40	2.15	3.03	4.05	5.22	6.51	7.94	9.47	11.1	12.8
	16	0.30	0.72	1.25	1.91	2.70	3.62	4.68	5.84	7.14	8.54	10.1	11.7
	18	0.27	0.65	1.13	1.72	2.44	3.27	4.23	5.28	6.48	7.77	9.16	10.7
	20	0.25	0.59	1.02	1.57	2.22	2.98	3.86	4.83	5.93	7.11	8.40	9.78
	24	0.21	0.50	0.87	1.33	1.88	2.53	3.27	4.11	5.05	6.07	7.19	8.39
	28	0.18	0.43	0.75	1.15	1.63	2.19	2.84	3.57	4.39	5.29	6.28	7.33
	32	0.16	0.38	0.66	1.01	1.43	1.93	2.50	3.15	3.88	4.68	5.56	6.50
	36	0.14	0.34	0.59	0.90	1.28	1.73	2.24	2.82	3.48	4.19	4.99	5.84
6	2	1.18	3.24	5.34	7.40	9.43	11.5	13.5	15.4	17.4	19.4	21.4	23.4
	3	0.97	2.85	4.90	6.99	9.07	11.1	13.2	15.2	17.2	19.2	21.2	23.2
	4	0.83	2.51	4.45	6.53	8.63	10.7	12.8	14.8	16.9	18.9	20.9	22.9
	5	0.72	2.23	4.05	6.07	8.16	10.3	12.4	14.5	16.5	18.6	20.6	22.6
	6	0.64	2.00	3.68	5.62	7.69	9.80	11.9	14.0	16.1	18.2	20.2	22.3
	7	0.57	1.81	3.36	5.20	7.22	9.31	11.4	13.5	15.7	17.7	19.8	21.9
	8	0.52	1.65	3.08	4.82	6.78	8.83	10.9	13.1	15.2	17.3	19.4	21.5
	9	0.48	1.52	2.83	4.48	6.36	8.37	10.5	12.6	14.7	16.8	18.9	21.0
	10	0.44	1.40	2.62	4.18	5.98	7.93	9.97	12.1	14.2	16.3	18.4	20.6
	12	0.38	1.21	2.27	3.66	5.31	7.13	9.08	11.1	13.2	15.3	17.4	19.6
	14	0.33	1.07	2.00	3.25	4.76	6.44	8.28	10.2	12.3	14.3	16.4	18.6
	16	0.30	0.95	1.79	2.92	4.29	5.85	7.58	9.43	11.4	13.4	15.5	17.6
	18	0.27	0.86	1.62	2.65	3.90	5.34	6.97	8.72	10.6	12.5	14.6	16.6
	20	0.25	0.78	1.47	2.42	3.58	4.91	6.43	8.09	9.87	11.7	13.7	15.7
	24	0.21	0.66	1.25	2.06	3.05	4.21	5.55	7.03	8.64	10.4	12.2	14.1
	28	0.18	0.57	1.08	1.79	2.66	3.68	4.87	6.19	7.65	9.22	10.9	12.6
	32	0.16	0.50	0.95	1.58	2.35	3.26	4.33	5.52	6.84	8.27	9.81	11.4
	36	0.14	0.45	0.85	1.42	2.11	2.93	3.90	4.97	6.18	7.49	8.91	10.4

Table 7-8 (continued)
Coefficients C for Eccentrically Loaded Bolt Groups
Angle = 30°

Available strength of a bolt group, ϕR_n or R_n/Ω, is determined with

$$R_n = C \times r_n$$

or

LRFD	ASD
$C_{min} = \dfrac{P_u}{\phi r_n}$	$C_{min} = \dfrac{\Omega P_a}{r_n}$

where

P = required force, P_u or P_a, kips
r_n = nominal strength per bolt, kips
e = eccentricity of P with respect to centroid of bolt group, in. (not tabulated, may be determined by geometry)
e_x = horizontal component of e, in.
s = bolt spacing, in.
C = coefficient tabulated below

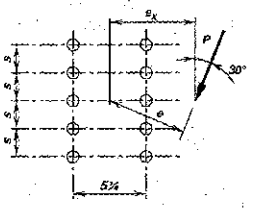

s, in.	e_x, in.	Number of Bolts in One Vertical Row, n											
		1	2	3	4	5	6	7	8	9	10	11	12
3	2	1.30	2.90	4.72	6.66	8.65	10.7	12.7	14.7	16.7	18.7	20.8	22.8
	3	1.08	2.47	4.13	5.94	7.86	9.85	11.9	13.9	16.0	18.0	20.0	22.1
	4	0.92	2.14	3.64	5.30	7.12	9.04	11.0	13.0	15.1	17.1	19.2	21.2
	5	0.80	1.89	3.24	4.76	6.46	8.29	10.2	12.2	14.2	16.3	18.3	20.4
	6	0.71	1.69	2.91	4.29	5.88	7.61	9.45	11.4	13.4	15.4	17.4	19.5
	7	0.64	1.53	2.63	3.90	5.38	7.01	8.76	10.6	12.5	14.5	16.5	18.6
	8	0.58	1.39	2.40	3.57	4.95	6.49	8.14	9.92	11.8	13.7	15.7	17.7
	9	0.53	1.28	2.20	3.29	4.58	6.02	7.59	9.29	11.1	12.9	14.9	16.8
	10	0.49	1.18	2.03	3.04	4.26	5.61	7.09	8.72	10.4	12.2	14.1	16.0
	12	0.42	1.02	1.76	2.65	3.72	4.92	6.25	7.73	9.31	11.0	12.8	14.6
	14	0.37	0.90	1.55	2.34	3.29	4.37	5.58	6.93	8.38	9.93	11.6	13.3
	16	0.33	0.80	1.38	2.09	2.95	3.92	5.03	6.26	7.59	9.03	10.6	12.2
	18	0.30	0.72	1.25	1.89	2.67	3.55	4.57	5.70	6.93	8.27	9.70	11.2
	20	0.27	0.66	1.13	1.73	2.43	3.25	4.19	5.23	6.36	7.62	8.95	10.4
	24	0.23	0.56	0.96	1.46	2.07	2.77	3.57	4.47	5.47	6.56	7.73	8.99
	28	0.20	0.48	0.83	1.27	1.79	2.41	3.11	3.90	4.78	5.75	6.78	7.91
	32	0.18	0.43	0.73	1.12	1.58	2.13	2.76	3.46	4.25	5.11	6.04	7.06
	36	0.16	0.38	0.66	1.00	1.42	1.91	2.47	3.10	3.81	4.59	5.44	6.36
6	2	1.30	3.27	5.33	7.36	9.38	11.4	13.4	15.4	17.4	19.3	21.3	23.3
	3	1.08	2.89	4.91	6.96	9.01	11.0	13.1	15.1	17.1	19.1	21.1	23.1
	4	0.92	2.56	4.50	6.53	8.58	10.6	12.7	14.7	16.8	18.8	20.8	22.8
	5	0.80	2.29	4.13	6.10	8.14	10.2	12.3	14.3	16.4	18.4	20.4	22.5
	6	0.71	2.08	3.80	5.69	7.70	9.75	11.8	13.9	15.9	18.0	20.0	22.1
	7	0.64	1.89	3.51	5.31	7.27	9.30	11.4	13.4	15.5	17.6	19.6	21.7
	8	0.58	1.74	3.25	4.96	6.86	8.86	10.9	13.0	15.0	17.1	19.2	21.3
	9	0.53	1.61	3.02	4.64	6.49	8.44	10.5	12.5	14.6	16.7	18.7	20.8
	10	0.49	1.49	2.81	4.35	6.13	8.04	10.0	12.1	14.1	16.2	18.3	20.4
	12	0.42	1.30	2.47	3.85	5.51	7.31	9.22	11.2	13.2	15.3	17.3	19.4
	14	0.37	1.15	2.19	3.44	4.98	6.67	8.49	10.4	12.4	14.4	16.4	18.5
	16	0.33	1.03	1.96	3.11	4.54	6.12	7.83	9.66	11.6	13.5	15.6	17.6
	18	0.30	0.93	1.78	2.83	4.16	5.63	7.26	9.00	10.8	12.8	14.7	16.7
	20	0.27	0.85	1.62	2.60	3.83	5.21	6.74	8.41	10.2	12.0	13.9	15.9
	24	0.23	0.72	1.38	2.23	3.30	4.51	5.89	7.40	9.02	10.7	12.5	14.4
	28	0.20	0.63	1.20	1.95	2.89	3.96	5.21	6.59	8.07	9.66	11.3	13.1
	32	0.18	0.55	1.06	1.73	2.57	3.53	4.67	5.92	7.28	8.75	10.3	12.0
	36	0.16	0.50	0.95	1.55	2.31	3.18	4.22	5.36	6.61	7.98	9.43	11.0

Table 7-8 (continued)
Coefficients *C* for Eccentrically Loaded Bolt Groups
Angle = 45°

Available strength of a bolt group, ϕR_n or R_n/Ω, is determined with

$$R_n = C \times r_n$$

or

LRFD	ASD
$C_{min} = \dfrac{P_u}{\phi r_n}$	$C_{min} = \dfrac{\Omega P_a}{r_n}$

where

P_r = required force, P_u or P_a, kips
r_n = nominal strength per bolt, kips
e = eccentricity of P with respect to centroid of bolt group, in. (not tabulated, may be determined by geometry)
e_x = horizontal component of e, in.
s = bolt spacing, in.
C = coefficient tabulated below

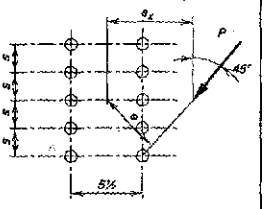

s, in.	e_x, in.	Number of Bolts in One Vertical Row, *n*											
		1	2	3	4	5	6	7	8	9	10	11	12
3	2	1.53	3.18	4.96	6.84	8.77	10.7	12.7	14.7	16.7	18.7	20.7	22.6
	3	1.30	2.76	4.42	6.22	8.09	10.0	12.0	14.0	15.9	17.9	19.9	21.9
	4	1.11	2.43	3.97	5.67	7.46	9.32	11.2	13.2	15.2	17.2	19.2	21.2
	5	0.98	2.17	3.60	5.19	6.89	8.68	10.6	12.5	14.4	16.4	18.4	20.4
	6	0.87	1.95	3.28	4.77	6.37	8.09	9.90	11.8	13.7	15.6	17.6	19.6
	7	0.78	1.78	3.01	4.40	5.91	7.56	9.31	11.1	13.0	14.9	16.9	18.8
	8	0.71	1.63	2.77	4.07	5.50	7.07	8.76	10.5	12.4	14.2	16.2	18.1
	9	0.65	1.50	2.57	3.78	5.13	6.64	8.26	9.97	11.8	13.6	15.5	17.4
	10	0.60	1.39	2.39	3.52	4.81	6.25	7.81	9.45	11.2	13.0	14.8	16.7
	12	0.52	1.22	2.08	3.09	4.26	5.58	7.01	8.54	10.2	11.9	13.6	15.4
	14	0.45	1.08	1.85	2.75	3.82	5.02	6.34	7.76	9.28	10.9	12.6	14.3
	16	0.41	0.96	1.65	2.48	3.45	4.55	5.77	7.09	8.53	10.1	11.6	13.3
	18	0.37	0.87	1.50	2.25	3.14	4.16	5.29	6.53	7.87	9.30	10.8	12.4
	20	0.33	0.79	1.37	2.06	2.88	3.82	4.87	6.04	7.30	8.65	10.1	11.6
	24	0.28	0.68	1.16	1.76	2.47	3.28	4.21	5.23	6.35	7.55	8.85	10.2
	28	0.25	0.59	1.01	1.53	2.15	2.87	3.69	4.61	5.61	6.69	7.87	9.11
	32	0.22	0.52	0.89	1.35	1.91	2.55	3.29	4.11	5.01	6.00	7.07	8.20
	36	0.20	0.46	0.80	1.21	1.71	2.29	2.96	3.70	4.53	5.43	6.40	7.44
6	2	1.53	3.39	5.36	7.35	9.35	11.3	13.3	15.3	17.3	19.3	21.3	23.2
	3	1.30	3.04	4.99	6.98	8.98	11.0	13.0	15.0	17.0	19.0	21.0	22.9
	4	1.11	2.74	4.64	6.60	8.60	10.6	12.6	14.6	16.6	18.6	20.6	22.6
	5	0.98	2.49	4.31	6.24	8.21	10.2	12.2	14.2	16.3	18.3	20.3	22.3
	6	0.87	2.28	4.02	5.89	7.84	9.82	11.8	13.8	15.9	17.9	19.9	21.9
	7	0.78	2.10	3.76	5.57	7.48	9.44	11.4	13.4	15.5	17.5	19.5	21.5
	8	0.71	1.94	3.53	5.28	7.13	9.07	11.0	13.0	15.1	17.1	19.1	21.1
	9	0.65	1.81	3.32	5.00	6.81	8.71	10.7	12.7	14.7	16.7	18.7	20.7
	10	0.60	1.69	3.13	4.74	6.50	8.37	10.3	12.3	14.3	16.3	18.3	20.3
	12	0.52	1.50	2.80	4.29	5.94	7.74	9.61	11.5	13.5	15.5	17.5	19.5
	14	0.45	1.34	2.52	3.89	5.45	7.17	8.98	10.9	12.8	14.7	16.7	18.7
	16	0.41	1.21	2.29	3.55	5.02	6.67	8.41	10.2	12.1	14.0	16.0	17.9
	18	0.37	1.10	2.09	3.26	4.65	6.22	7.89	9.65	11.5	13.4	15.3	17.2
	20	0.33	1.01	1.92	3.01	4.33	5.82	7.42	9.11	10.9	12.7	14.6	16.5
	24	0.28	0.86	1.64	2.61	3.79	5.13	6.60	8.17	9.84	11.6	13.4	15.2
	28	0.25	0.75	1.44	2.30	3.36	4.58	5.92	7.38	8.95	10.6	12.3	14.1
	32	0.22	0.67	1.27	2.05	3.02	4.12	5.35	6.72	8.18	9.73	11.4	13.0
	36	0.20	0.60	1.14	1.85	2.73	3.74	4.88	6.15	7.52	8.98	10.5	12.1

Table 7-8 (continued)

Coefficients C for Eccentrically Loaded Bolt Groups

Angle = 60°

Available strength of a bolt group, ϕR_n or R_n/Ω, is determined with

$$R_n = C \times r_n$$

or

LRFD	ASD
$C_{min} = \frac{P_u}{\phi r_n}$	$C_{min} = \frac{\Omega P_a}{r_n}$

where

P = required force, P_u or P_a, kips
r_n = nominal strength per bolt, kips
e = eccentricity of P with respect to centroid of bolt group, in. (not tabulated, may be determined by geometry)
e_x = horizontal component of e, in.
s = bolt spacing, in.
C = coefficient tabulated below

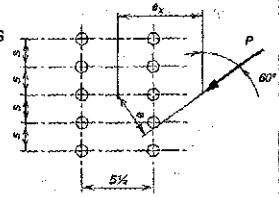

s, in.	e_x, in.	Number of Bolts in One Vertical Row, n											
		1	2	3	4	5	6	7	8	9	10	11	12
3	2	1.78	3.55	5.34	7.17	9.04	10.9	12.9	14.8	16.7	18.7	20.6	22.6
	3	1.62	3.26	4.95	6.71	8.53	10.4	12.3	14.2	16.1	18.1	20.0	22.0
	4	1.45	2.97	4.57	6.27	8.04	9.86	11.7	13.6	15.5	17.5	19.4	21.4
	5	1.31	2.71	4.23	5.86	7.58	9.36	11.2	13.1	15.0	16.9	18.8	20.7
	6	1.18	2.48	3.93	5.50	7.16	8.90	10.7	12.5	14.4	16.3	18.2	20.1
	7	1.07	2.28	3.66	5.18	6.79	8.48	10.2	12.0	13.9	15.7	17.6	19.5
	8	0.98	2.11	3.43	4.88	6.45	8.09	9.80	11.6	13.4	15.2	17.1	19.0
	9	0.90	1.97	3.22	4.61	6.12	7.72	9.39	11.1	12.9	14.7	16.6	18.4
	10	0.83	1.84	3.03	4.37	5.82	7.37	9.00	10.7	12.5	14.2	16.1	17.9
	12	0.72	1.62	2.70	3.93	5.28	6.73	8.28	9.91	11.6	13.4	15.1	16.9
	14	0.64	1.45	2.43	3.56	4.81	6.19	7.66	9.22	10.9	12.5	14.3	16.0
	16	0.57	1.31	2.21	3.24	4.42	5.71	7.11	8.60	10.2	11.8	13.5	15.2
	18	0.52	1.19	2.02	2.98	4.07	5.29	6.63	8.05	9.55	11.1	12.7	14.4
	20	0.47	1.09	1.85	2.75	3.77	4.93	6.19	7.55	8.98	10.5	12.1	13.7
	24	0.40	0.93	1.59	2.37	3.28	4.32	5.46	6.69	8.01	9.41	10.9	12.4
	28	0.35	0.82	1.39	2.08	2.90	3.83	4.86	5.99	7.21	8.51	9.88	11.3
	32	0.31	0.72	1.24	1.86	2.59	3.43	4.37	5.41	6.54	7.75	9.02	10.4
	36	0.28	0.65	1.11	1.67	2.34	3.11	3.97	4.93	5.98	7.10	8.29	9.55
6	2	1.78	3.59	5.48	7.41	9.36	11.3	13.3	15.3	17.2	19.2	21.2	23.2
	3	1.62	3.35	5.20	7.12	9.06	11.0	13.0	15.0	16.9	18.9	20.9	22.9
	4	1.45	3.11	4.93	6.82	8.75	10.7	12.7	14.6	16.6	18.6	20.6	22.5
	5	1.31	2.89	4.66	6.53	8.45	10.4	12.3	14.3	16.3	18.2	20.2	22.2
	6	1.18	2.70	4.42	6.26	8.16	10.1	12.0	14.0	15.9	17.9	19.9	21.9
	7	1.07	2.52	4.19	6.01	7.88	9.79	11.7	13.7	15.6	17.6	19.6	21.5
	8	0.98	2.36	3.99	5.77	7.62	9.51	11.4	13.4	15.3	17.3	19.2	21.2
	9	0.90	2.23	3.81	5.55	7.37	9.24	11.1	13.1	15.0	17.0	18.9	20.9
	10	0.83	2.10	3.64	5.35	7.13	8.98	10.9	12.8	14.7	16.7	18.6	20.6
	12	0.72	1.89	3.34	4.97	6.70	8.49	10.3	12.2	14.1	16.1	18.0	19.9
	14	0.64	1.71	3.08	4.63	6.29	8.04	9.85	11.7	13.6	15.5	17.4	19.3
	16	0.57	1.57	2.85	4.32	5.92	7.62	9.39	11.2	13.1	15.0	16.9	18.8
	18	0.52	1.44	2.65	4.04	5.58	7.22	8.95	10.7	12.6	14.4	16.3	18.2
	20	0.47	1.33	2.47	3.79	5.26	6.86	8.55	10.3	12.1	13.9	15.8	17.7
	24	0.40	1.16	2.17	3.36	4.71	6.21	7.82	9.50	11.2	13.0	14.8	16.7
	28	0.35	1.02	1.92	3.00	4.26	5.67	7.19	8.80	10.5	12.2	14.0	15.8
	32	0.31	0.91	1.72	2.71	3.88	5.20	6.64	8.17	9.77	11.4	13.1	14.9
	36	0.28	0.82	1.56	2.46	3.55	4.80	6.16	7.61	9.14	10.7	12.4	14.1

Table 7-8 (continued)
Coefficients C for Eccentrically Loaded Bolt Groups
Angle = 75°

Available strength of a bolt group, ϕR_n or R_n/Ω, is determined with

$$R_n = C \times r_n$$

or

LRFD	ASD
$C_{min} = \frac{P_u}{\phi r_n}$	$C_{min} = \frac{\Omega P_a}{r_n}$

where

P_u = required force, P_u or P_a, kips
r_n = nominal strength per bolt, kips
e = eccentricity of P with respect to centroid of bolt group, in. (not tabulated, may be determined by geometry)
e_x = horizontal component of e, in.
s = bolt spacing, in.
C = coefficient tabulated below

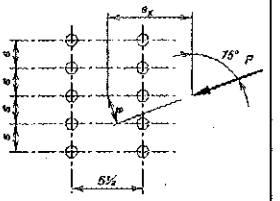

s, in.	e_x, in.	Number of Bolts in One Vertical Row, n											
		1	2	3	4	5	6	7	8	9	10	11	12
3	2	1.92	3.82	5.70	7.57	9.45	11.3	13.2	15.2	17.1	19.0	20.9	22.9
	3	1.87	3.72	5.54	7.36	9.19	11.1	12.9	14.8	16.7	18.6	20.5	22.5
	4	1.82	3.60	5.37	7.14	8.94	10.8	12.6	14.5	16.3	18.2	20.1	22.1
	5	1.75	3.47	5.18	6.92	8.68	10.5	12.3	14.1	16.0	17.9	19.8	21.7
	6	1.68	3.33	5.00	6.69	8.42	10.2	12.0	13.8	15.7	17.5	19.4	21.3
	7	1.60	3.19	4.81	6.47	8.17	9.92	11.7	13.5	15.3	17.2	19.1	20.9
	8	1.52	3.06	4.63	6.26	7.93	9.66	11.4	13.2	15.0	16.9	18.7	20.6
	9	1.45	2.93	4.46	6.05	7.70	9.41	11.2	12.9	14.7	16.5	18.4	20.3
	10	1.38	2.80	4.29	5.85	7.48	9.16	10.9	12.6	14.4	16.2	18.1	19.9
	12	1.25	2.57	3.98	5.48	7.07	8.71	10.4	12.1	13.9	15.7	17.5	19.3
	14	1.13	2.36	3.70	5.15	6.69	8.29	9.96	11.7	13.4	15.2	16.9	18.7
	16	1.03	2.18	3.45	4.85	6.34	7.90	9.53	11.2	12.9	14.7	16.4	18.2
	18	0.95	2.02	3.23	4.57	6.01	7.54	9.13	10.8	12.5	14.2	15.9	17.7
	20	0.87	1.88	3.03	4.32	5.71	7.19	8.75	10.4	12.0	13.7	15.4	17.2
	24	0.75	1.65	2.69	3.87	5.17	6.57	8.05	9.60	11.2	12.9	14.5	16.2
	28	0.66	1.46	2.42	3.50	4.71	6.03	7.44	8.93	10.5	12.1	13.7	15.4
	32	0.59	1.31	2.18	3.19	4.32	5.56	6.90	8.32	9.81	11.4	12.9	14.6
	36	0.53	1.19	1.99	2.92	3.98	5.15	6.42	7.78	9.21	10.7	12.2	13.8
6	2	1.92	3.80	5.69	7.59	9.51	11.5	13.4	15.4	17.6	19.6	21.5	23.5
	3	1.87	3.70	5.55	7.42	9.32	11.2	13.2	15.1	17.1	19.0	21.0	23.0
	4	1.82	3.59	5.40	7.25	9.14	11.1	13.0	14.9	16.9	18.8	20.8	22.7
	5	1.75	3.48	5.26	7.09	8.96	10.9	12.8	14.7	16.6	18.6	20.5	22.5
	6	1.68	3.36	5.11	6.93	8.78	10.7	12.6	14.5	16.4	18.4	20.3	22.2
	7	1.60	3.24	4.97	6.77	8.62	10.5	12.4	14.3	16.2	18.1	20.1	22.0
	8	1.52	3.13	4.84	6.62	8.45	10.3	12.2	14.1	16.0	17.9	19.9	21.8
	9	1.45	3.02	4.71	6.47	8.29	10.2	12.0	13.9	15.8	17.7	19.7	21.6
	10	1.38	2.91	4.58	6.33	8.14	9.98	11.9	13.7	15.6	17.6	19.5	21.4
	12	1.25	2.72	4.34	6.07	7.85	9.67	11.5	13.4	15.3	17.2	19.1	21.0
	14	1.13	2.54	4.13	5.82	7.57	9.38	11.2	13.1	15.0	16.8	18.7	20.6
	16	1.03	2.38	3.92	5.59	7.32	9.10	10.9	12.8	14.6	16.5	18.4	20.3
	18	0.95	2.24	3.74	5.38	7.09	8.85	10.7	12.5	14.3	16.2	18.1	19.9
	20	0.87	2.11	3.57	5.17	6.87	8.61	10.4	12.2	14.0	15.9	17.7	19.6
	24	0.75	1.88	3.27	4.80	6.44	8.15	9.90	11.7	13.5	15.3	17.1	19.0
	28	0.66	1.70	3.00	4.47	6.06	7.72	9.43	11.2	13.0	14.8	16.6	18.4
	32	0.59	1.55	2.77	4.17	5.70	7.31	8.99	10.7	12.5	14.3	16.1	17.9
	36	0.53	1.42	2.57	3.90	5.37	6.93	8.57	10.3	12.0	13.8	15.5	17.3

Table 7-9
Coefficients C for Eccentrically Loaded Bolt Groups
Angle = 0°

Available strength of a bolt group, ϕR_n or R_n/Ω, is determined with

$$R_n = C \times r_n$$

or

LRFD	ASD
$C_{min} = \frac{P_u}{\phi r_n}$	$C_{min} = \frac{\Omega P_a}{r_n}$

where

P = required force, P_u or P_a, kips
r_n = nominal strength per bolt, kips
e = eccentricity of P with respect to centroid of bolt group, in. (not tabulated, may be determined by geometry)
e_x = horizontal component of e, in.
s = bolt spacing, In.
C = coefficient tabulated below

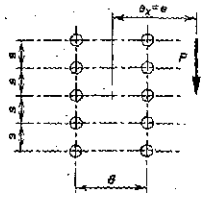

s, in.	e_x, in.	Number of Bolts in One Vertical Row, n											
		1	2	3	4	5	6	7	8	9	10	11	12
3	2	1.31	2.91	4.71	6.66	8.69	10.8	12.8	14.9	16.9	18.9	21.0	23.0
	3	1.12	2.54	4.14	5.95	7.90	9.93	12.0	14.1	16.2	18.2	20.3	22.4
	4	0.98	2.24	3.66	5.33	7.15	9.10	11.1	13.2	15.3	17.4	19.5	21.6
	5	0.87	1.99	3.27	4.80	6.48	8.33	10.3	12.3	14.4	16.5	18.6	20.7
	6	0.79	1.80	2.95	4.35	5.90	7.63	9.49	11.5	13.5	15.6	17.7	19.8
	7	0.71	1.63	2.68	3.97	5.40	7.02	8.77	10.7	12.6	14.6	16.7	18.8
	8	0.65	1.49	2.46	3.65	4.97	6.48	8.13	9.91	11.8	13.8	15.8	17.9
	9	0.60	1.38	2.27	3.37	4.59	6.01	7.55	9.24	11.1	13.0	14.9	17.0
	10	0.56	1.28	2.11	3.13	4.27	5.59	7.04	8.64	10.4	12.2	14.1	16.1
	12	0.49	1.11	1.84	2.73	3.73	4.90	6.19	7.63	9.18	10.9	12.6	14.5
	14	0.44	0.99	1.64	2.42	3.31	4.36	5.50	6.80	8.20	9.73	11.4	13.1
	16	0.39	0.89	1.47	2.17	2.98	3.91	4.95	6.13	7.40	8.80	10.3	11.9
	18	0.36	0.80	1.33	1.97	2.70	3.55	4.50	5.57	6.73	8.02	9.39	10.9
	20	0.33	0.73	1.22	1.80	2.47	3.25	4.12	5.10	6.17	7.35	8.62	9.99
	24	0.28	0.63	1.04	1.53	2.10	2.77	3.51	4.35	5.28	6.30	7.39	8.59
	28	0.25	0.55	0.91	1.33	1.83	2.41	3.06	3.79	4.60	5.50	6.46	7.51
	32	0.22	0.48	0.80	1.18	1.62	2.13	2.71	3.36	4.08	4.87	5.73	6.67
	36	0.20	0.43	0.72	1.06	1.45	1.91	2.43	3.01	3.66	4.37	5.15	5.99
	C', in.	7.85	16.8	27.3	39.9	54.6	71.5	90.9	113	137	164	194	226
6	2	1.31	3.28	5.35	7.42	9.47	11.5	13.5	15.5	17.5	19.5	21.4	23.4
	3	1.12	2.93	4.94	7.03	9.12	11.2	13.2	15.3	17.3	19.3	21.3	23.3
	4	0.98	2.63	4.52	6.59	8.70	10.8	12.9	14.9	17.0	19.0	21.0	23.0
	5	0.87	2.37	4.13	6.15	8.25	10.4	12.5	14.6	16.6	18.7	20.7	22.8
	6	0.79	2.15	3.78	5.72	7.78	9.90	12.0	14.1	16.2	18.3	20.4	22.4
	7	0.71	1.97	3.47	5.32	7.33	9.43	11.6	13.7	15.8	17.9	20.0	22.1
	8	0.65	1.81	3.19	4.95	6.89	8.95	11.1	13.2	15.4	17.5	19.6	21.7
	9	0.60	1.67	2.95	4.62	6.48	8.49	10.6	12.7	14.9	17.0	19.1	21.3
	10	0.56	1.55	2.75	4.33	6.10	8.05	10.1	12.2	14.4	16.5	18.7	20.8
	12	0.49	1.35	2.40	3.82	5.43	7.25	9.21	11.3	13.4	15.5	17.7	19.8
	14	0.44	1.20	2.14	3.41	4.86	6.56	8.40	10.4	12.4	14.5	16.7	18.8
	16	0.39	1.08	1.92	3.07	4.40	5.96	7.69	9.56	11.5	13.6	15.7	17.8
	18	0.36	0.97	1.75	2.79	4.00	5.46	7.06	8.83	10.7	12.7	14.7	16.8
	20	0.33	0.89	1.60	2.56	3.67	5.02	6.52	8.18	9.97	11.9	13.9	15.9
	24	0.28	0.76	1.37	2.18	3.14	4.32	5.62	7.11	8.71	10.4	12.3	14.2
	28	0.25	0.66	1.19	1.90	2.75	3.78	4.93	6.26	7.70	9.27	11.0	12.7
	32	0.22	0.58	1.05	1.68	2.44	3.35	4.38	5.58	6.88	8.31	9.85	11.5
	36	0.20	0.52	0.95	1.51	2.19	3.01	3.94	5.02	6.21	7.52	8.93	10.4
	C', in.	7.85	19.6	35.6	56.6	82.5	114	150	192	239	292	350	414

Table 7-9 (continued)
Coefficients *C* for Eccentrically Loaded Bolt Groups
Angle = 15°

Available strength of a bolt group, ϕR_n or R_n/Ω, is determined with

$$R_n = C \times r_n$$

or

LRFD	ASD
$C_{min} = \frac{P_u}{\phi r_n}$	$C_{min} = \frac{\Omega P_a}{r_n}$

where

P = required force, P_u or P_a, kips
r_n = nominal strength per bolt, kips
e = eccentricity of P with respect to centroid of bolt group, in. (not tabulated, may be determined by geometry)
e_x = horizontal component of e, in.
s = bolt spacing, in.
C = coefficient tabulated below

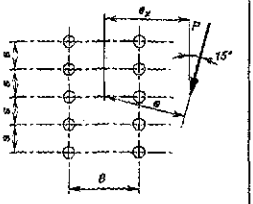

s, in.	e_x, in.	Number of Bolts in One Vertical Row, n											
		1	2	3	4	5	6	7	8	9	10	11	12
3	2	1.35	2.96	4.75	6.67	8.67	10.7	12.7	14.8	16.8	18.8	20.9	22.9
	3	1.16	2.58	4.20	5.98	7.90	9.89	11.9	14.0	16.0	18.1	20.2	22.2
	4	1.02	2.28	3.73	5.37	7.17	9.08	11.1	13.1	15.2	17.3	19.3	21.4
	5	0.90	2.03	3.35	4.85	6.53	8.34	10.3	12.2	14.3	16.3	18.4	20.5
	6	0.81	1.84	3.03	4.40	5.96	7.66	9.48	11.4	13.4	15.4	17.5	19.6
	7	0.74	1.67	2.76	4.02	5.48	7.06	8.79	10.6	12.6	14.5	16.6	18.6
	8	0.68	1.53	2.53	3.70	5.05	6.53	8.17	9.91	11.8	13.7	15.7	17.7
	9	0.63	1.42	2.34	3.43	4.68	6.07	7.61	9.27	11.0	12.9	14.8	16.8
	10	0.58	1.31	2.17	3.19	4.36	5.66	7.12	8.69	10.4	12.2	14.0	16.0
	12	0.51	1.15	1.90	2.79	3.82	4.97	6.28	7.69	9.23	10.9	12.6	14.4
	14	0.45	1.02	1.69	2.48	3.40	4.43	5.61	6.88	8.29	9.79	11.4	13.1
	16	0.41	0.91	1.51	2.23	3.05	3.99	5.05	6.21	7.50	8.88	10.4	11.9
	18	0.37	0.83	1.37	2.02	2.77	3.63	4.60	5.66	6.84	8.11	9.48	11.0
	20	0.34	0.76	1.26	1.85	2.54	3.32	4.21	5.19	6.28	7.45	8.73	10.1
	24	0.29	0.65	1.07	1.58	2.16	2.84	3.60	4.45	5.39	6.40	7.52	8.71
	28	0.25	0.56	0.93	1.37	1.89	2.47	3.14	3.88	4.71	5.61	6.59	7.64
	32	0.23	0.50	0.83	1.22	1.67	2.19	2.78	3.44	4.18	4.98	5.86	6.80
	36	0.20	0.45	0.74	1.09	1.50	1.96	2.49	3.09	3.75	4.47	5.27	6.12
6	2	1.35	3.29	5.33	7.39	9.42	11.4	13.4	15.4	17.4	19.4	21.4	23.4
	3	1.16	2.94	4.93	6.99	9.05	11.1	13.1	15.2	17.2	19.2	21.2	23.2
	4	1.02	2.64	4.52	6.55	8.63	10.7	12.8	14.8	16.9	18.9	20.9	22.9
	5	0.90	2.38	4.15	6.12	8.18	10.3	12.4	14.4	16.5	18.5	20.6	22.6
	6	0.81	2.17	3.82	5.70	7.72	9.80	11.9	14.0	16.1	18.2	20.2	22.3
	7	0.74	1.99	3.52	5.31	7.28	9.33	11.4	13.5	15.6	17.7	19.8	21.9
	8	0.68	1.83	3.25	4.95	6.86	8.87	11.0	13.1	15.2	17.3	19.4	21.5
	9	0.63	1.69	3.02	4.63	6.46	8.43	10.5	12.6	14.7	16.8	18.9	21.0
	10	0.58	1.58	2.81	4.34	6.10	8.00	10.0	12.1	14.2	16.3	18.4	20.5
	12	0.51	1.38	2.47	3.84	5.45	7.23	9.15	11.2	13.2	15.3	17.4	19.6
	14	0.45	1.23	2.20	3.44	4.91	6.56	8.38	10.3	12.3	14.4	16.5	18.6
	16	0.41	1.10	1.98	3.11	4.46	5.99	7.69	9.52	11.5	13.5	15.5	17.6
	18	0.37	1.00	1.80	2.83	4.08	5.49	7.09	8.82	10.7	12.6	14.6	16.6
	20	0.34	0.92	1.65	2.60	3.75	5.06	6.56	8.20	9.96	11.8	13.8	15.7
	24	0.29	0.78	1.41	2.23	3.22	4.36	5.70	7.15	8.74	10.4	12.2	14.1
	28	0.25	0.68	1.23	1.95	2.82	3.83	5.02	6.32	7.76	9.31	11.0	12.7
	32	0.23	0.60	1.09	1.73	2.50	3.41	4.47	5.64	6.96	8.38	9.90	11.5
	36	0.20	0.54	0.97	1.55	2.25	3.07	4.03	5.09	6.30	7.60	9.01	10.5

Table 7-9 (continued)
Coefficients C for Eccentrically Loaded Bolt Groups
Angle = 30°

Available strength of a bolt group, ϕR_n or R_n/Ω, is determined with

$$R_n = C \times r_n$$

or

LRFD	ASD
$C_{min} = \dfrac{P_u}{\phi r_n}$	$C_{min} = \dfrac{\Omega P_a}{r_n}$

where

P = required force, P_u or P_a, kips
r_n = nominal strength per bolt, kips
e = eccentricity of P with respect to centroid of bolt group, in. (not tabulated, may be determined by geometry)
e_x = horizontal component of e, in.
s = bolt spacing, in.
C = coefficient tabulated below

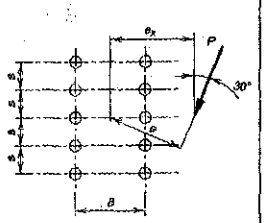

s, in.	e_x, in.	Number of Bolts in One Vertical Row, n											
		1	2	3	4	5	6	7	8	9	10	11	12
3	2	1.49	3.12	4.91	6.80	8.75	10.7	12.7	14.7	16.7	18.7	20.8	22.7
	3	1.29	2.74	4.39	6.16	8.04	9.98	12.0	14.0	16.0	18.0	20.0	22.1
	4	1.13	2.43	3.95	5.60	7.37	9.24	11.2	13.2	15.2	17.2	19.2	21.3
	5	1.00	2.18	3.58	5.10	6.77	8.55	10.4	12.4	14.3	16.3	18.4	20.4
	6	0.90	1.98	3.26	4.67	6.23	7.93	9.72	11.6	13.5	15.5	17.5	19.5
	7	0.82	1.81	2.99	4.30	5.76	7.37	9.08	10.9	12.8	14.7	16.7	18.7
	8	0.75	1.67	2.76	3.97	5.35	6.87	8.49	10.2	12.0	13.9	15.9	17.8
	9	0.70	1.55	2.56	3.69	4.98	6.42	7.96	9.62	11.4	13.2	15.1	17.0
	10	0.65	1.44	2.38	3.44	4.66	6.02	7.49	9.07	10.8	12.5	14.4	16.2
	12	0.57	1.26	2.09	3.03	4.13	5.34	6.66	8.12	9.67	11.3	13.0	14.8
	14	0.50	1.12	1.86	2.71	3.69	4.78	5.99	7.33	8.75	10.3	11.9	13.6
	16	0.45	1.01	1.67	2.44	3.33	4.33	5.44	6.66	7.98	9.39	10.9	12.5
	18	0.41	0.92	1.52	2.22	3.03	3.95	4.97	6.10	7.32	8.64	10.1	11.5
	20	0.38	0.84	1.39	2.03	2.78	3.62	4.57	5.62	6.75	7.98	9.30	10.7
	24	0.32	0.72	1.19	1.74	2.38	3.11	3.93	4.84	5.83	6.92	8.08	9.32
	28	0.28	0.63	1.04	1.52	2.08	2.72	3.44	4.24	5.13	6.09	7.12	8.24
	32	0.25	0.56	0.92	1.35	1.84	2.41	3.06	3.77	4.57	5.43	6.36	7.37
	36	0.23	0.50	0.83	1.21	1.66	2.17	2.75	3.40	4.11	4.89	5.74	6.66
6	2	1.49	3.36	5.36	7.37	9.38	11.4	13.4	15.4	17.4	19.3	21.3	23.3
	3	1.29	3.02	4.97	6.99	9.01	11.0	13.1	15.1	17.1	19.1	21.1	23.1
	4	1.13	2.73	4.60	6.58	8.61	10.7	12.7	14.7	16.7	18.8	20.8	22.8
	5	1.00	2.48	4.26	6.18	8.18	10.2	12.3	14.3	16.4	18.4	20.4	22.4
	6	0.90	2.27	3.96	5.80	7.76	9.79	11.8	13.9	15.9	18.0	20.0	22.1
	7	0.82	2.09	3.68	5.44	7.36	9.35	11.4	13.5	15.5	17.6	19.6	21.7
	8	0.75	1.93	3.43	5.11	6.97	8.93	11.0	13.0	15.1	17.1	19.2	21.2
	9	0.70	1.80	3.21	4.81	6.61	8.53	10.5	12.6	14.6	16.7	18.7	20.8
	10	0.65	1.68	3.01	4.53	6.27	8.14	10.1	12.1	14.2	16.2	18.3	20.4
	12	0.57	1.49	2.67	4.05	5.67	7.43	9.31	11.3	13.3	15.3	17.4	19.4
	14	0.50	1.33	2.39	3.65	5.15	6.81	8.60	10.5	12.4	14.4	16.5	18.5
	16	0.45	1.20	2.16	3.31	4.71	6.27	7.96	9.76	11.7	13.6	15.6	17.6
	18	0.41	1.09	1.97	3.03	4.34	5.79	7.39	9.12	10.9	12.8	14.8	16.8
	20	0.38	1.00	1.81	2.80	4.01	5.37	6.89	8.53	10.3	12.1	14.0	15.9
	24	0.32	0.86	1.55	2.41	3.48	4.68	6.04	7.53	9.14	10.8	12.6	14.5
	28	0.28	0.75	1.35	2.12	3.06	4.13	5.36	6.72	8.19	9.76	11.4	13.2
	32	0.25	0.67	1.20	1.89	2.73	3.69	4.81	6.05	7.40	8.86	10.4	12.0
	36	0.23	0.60	1.08	1.70	2.46	3.34	4.36	5.50	6.74	8.09	9.53	11.1

Table 7-9 (continued)
Coefficients C for Eccentrically Loaded Bolt Groups
Angle = 45°

Available strength of a bolt group, ϕR_n or R_n/Ω, is determined with

$$R_n = C \times r_n$$

or

LRFD	ASD
$C_{min} = \frac{P_u}{\phi r_n}$	$C_{min} = \frac{\Omega P_a}{r_n}$

where

P = required force, P_u or P_a, kips
r_n = nominal strength per bolt, kips
e = eccentricity of P with respect to centroid of bolt group, in. (not tabulated, may be determined by geometry)
e_x = horizontal component of e, in.
s = bolt spacing, in.
C = coefficient tabulated below

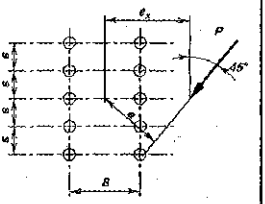

s, in.	e_x, in.	Number of Bolts in One Vertical Row, n											
		1	2	3	4	5	6	7	8	9	10	11	12
3	2	1.70	3.43	5.22	7.06	8.95	10.9	12.8	14.8	16.8	18.7	20.7	22.7
	3	1.51	3.09	4.76	6.52	8.35	10.2	12.2	14.1	16.1	18.0	20.0	22.0
	4	1.35	2.78	4.34	6.01	7.78	9.60	11.5	13.4	15.3	17.3	19.3	21.3
	5	1.21	2.52	3.97	5.57	7.25	9.01	10.8	12.7	14.6	16.6	18.5	20.5
	6	1.10	2.30	3.67	5.17	6.78	8.47	10.2	12.1	13.9	15.9	17.8	19.8
	7	1.00	2.12	3.40	4.82	6.35	7.97	9.67	11.5	13.3	15.2	17.1	19.0
	8	0.92	1.96	3.17	4.51	5.96	7.51	9.15	10.9	12.7	14.5	16.4	18.3
	9	0.85	1.82	2.96	4.23	5.60	7.08	8.68	10.4	12.1	13.9	15.7	17.6
	10	0.79	1.70	2.78	3.97	5.28	6.70	8.24	9.86	11.5	13.3	15.1	17.0
	12	0.69	1.50	2.46	3.54	4.73	6.04	7.46	8.97	10.6	12.2	14.0	15.7
	14	0.61	1.34	2.21	3.18	4.27	5.48	6.80	8.21	9.70	11.3	12.9	14.6
	16	0.55	1.21	2.00	2.88	3.89	5.01	6.23	7.54	8.95	10.4	12.0	13.6
	18	0.50	1.11	1.82	2.64	3.56	4.60	5.74	6.97	8.30	9.71	11.2	12.7
	20	0.46	1.02	1.67	2.42	3.29	4.25	5.31	6.47	7.73	9.06	10.5	11.9
	24	0.40	0.87	1.43	2.09	2.84	3.68	4.62	5.65	6.77	7.96	9.23	10.6
	28	0.35	0.76	1.26	1.83	2.49	3.24	4.07	5.00	6.00	7.08	8.24	9.47
	32	0.31	0.68	1.12	1.63	2.22	2.89	3.64	4.47	5.38	6.37	7.43	8.56
	36	0.28	0.61	1.00	1.46	2.00	2.60	3.29	4.04	4.87	5.78	6.75	7.79
6	2	1.70	3.52	5.44	7.40	9.37	11.4	13.3	15.3	17.3	19.3	21.3	23.2
	3	1.51	3.23	5.11	7.06	9.03	11.0	13.0	15.0	17.0	19.0	21.0	22.9
	4	1.35	2.96	4.79	6.70	8.67	10.7	12.7	14.6	16.6	18.6	20.6	22.6
	5	1.21	2.72	4.48	6.36	8.30	10.3	12.3	14.3	16.3	18.3	20.3	22.3
	6	1.10	2.51	4.20	6.03	7.94	9.90	11.9	13.9	15.9	17.9	19.9	21.9
	7	1.00	2.33	3.96	5.73	7.60	9.53	11.5	13.5	15.5	17.5	19.5	21.5
	8	0.92	2.18	3.73	5.45	7.27	9.17	11.1	13.1	15.1	17.1	19.1	21.1
	9	0.85	2.04	3.53	5.19	6.96	8.83	10.8	12.7	14.7	16.7	18.7	20.7
	10	0.79	1.92	3.35	4.94	6.67	8.50	10.4	12.4	14.3	16.3	18.3	20.3
	12	0.69	1.71	3.02	4.50	6.13	7.88	9.73	11.6	13.6	15.5	17.5	19.5
	14	0.61	1.55	2.75	4.12	5.65	7.33	9.11	11.0	12.9	14.8	16.8	18.8
	16	0.55	1.41	2.51	3.78	5.22	6.83	8.55	10.3	12.2	14.1	16.0	18.0
	18	0.50	1.29	2.31	3.49	4.85	6.39	8.04	9.77	11.6	13.4	15.3	17.3
	20	0.46	1.19	2.13	3.24	4.53	6.00	7.57	9.25	11.0	12.8	14.7	16.6
	24	0.40	1.03	1.84	2.82	3.99	5.32	6.76	8.32	9.97	11.7	13.5	15.3
	28	0.35	0.90	1.62	2.50	3.56	4.76	6.09	7.53	9.08	10.7	12.4	14.2
	32	0.31	0.80	1.44	2.24	3.20	4.30	5.52	6.86	8.32	9.85	11.5	13.1
	36	0.28	0.72	1.30	2.02	2.90	3.92	5.04	6.30	7.66	9.10	10.6	12.2

Table 7-9 (continued)
Coefficients C for Eccentrically Loaded Bolt Groups
Angle = 60°

Available strength of a bolt group, ϕR_n or R_n/Ω, is determined with

$$R_n = C \times r_n$$

or

LRFD	ASD
$C_{min} = \dfrac{P_u}{\phi r_n}$	$C_{min} = \dfrac{\Omega P_a}{r_n}$

where

P = required force, P_u or P_a, kips
r_n = nominal strength per bolt, kips
e = eccentricity of P with respect to centroid of bolt group, in. (not tabulated, may be determined by geometry)
e_x = horizontal component of e, in.
s = bolt spacing, in.
C = coefficient tabulated below

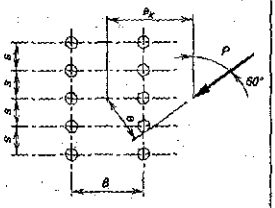

s, in.	e_x, in.	Number of Bolts in One Vertical Row, n											
		1	2	3	4	5	6	7	8	9	10	11	12
3	2	1.86	3.71	5.56	7.41	9.28	11.2	13.1	15.0	16.9	18.8	20.8	22.7
	3	1.77	3.52	5.29	7.07	8.88	10.7	12.6	14.5	16.4	18.3	20.2	22.1
	4	1.66	3.31	4.99	6.70	8.45	10.3	12.1	13.9	15.8	17.7	19.6	21.6
	5	1.54	3.10	4.70	6.34	8.04	9.79	11.6	13.4	15.3	17.1	19.0	21.0
	6	1.43	2.90	4.41	6.00	7.64	9.35	11.1	12.9	14.7	16.6	18.5	20.4
	7	1.33	2.71	4.15	5.68	7.27	8.94	10.7	12.4	14.2	16.1	17.9	19.8
	8	1.24	2.54	3.92	5.39	6.94	8.56	10.3	12.0	13.8	15.6	17.4	19.3
	9	1.16	2.38	3.70	5.12	6.63	8.22	9.86	11.6	13.3	15.1	16.9	18.7
	10	1.08	2.24	3.51	4.88	6.34	7.89	9.49	11.2	12.9	14.6	16.4	18.2
	12	0.96	2.00	3.17	4.44	5.82	7.28	8.81	10.4	12.1	13.8	15.5	17.3
	14	0.86	1.81	2.88	4.07	5.36	6.73	8.19	9.72	11.3	13.0	14.7	16.4
	16	0.77	1.64	2.64	3.74	4.95	6.25	7.64	9.11	10.7	12.2	13.9	15.6
	18	0.70	1.51	2.43	3.46	4.59	5.83	7.15	8.56	10.0	11.6	13.2	14.8
	20	0.65	1.39	2.25	3.21	4.28	5.45	6.71	8.06	9.48	11.0	12.5	14.1
	24	0.56	1.20	1.95	2.80	3.76	4.81	5.96	7.19	8.50	9.88	11.3	12.8
	28	0.49	1.06	1.72	2.48	3.34	4.29	5.34	6.47	7.68	8.97	10.3	11.7
	32	0.43	0.94	1.54	2.22	3.00	3.87	4.83	5.87	6.99	8.19	9.46	10.8
	36	0.39	0.85	1.39	2.01	2.72	3.52	4.40	5.36	6.41	7.53	8.71	9.96
6	2	1.86	3.72	5.59	7.50	9.43	11.4	13.3	15.3	17.3	19.2	21.2	23.2
	3	1.77	3.55	5.37	7.25	9.16	11.1	13.0	15.0	17.0	18.9	20.9	22.9
	4	1.66	3.36	5.14	6.98	8.88	10.8	12.7	14.7	16.7	18.6	20.6	22.6
	5	1.54	3.17	4.90	6.72	8.59	10.5	12.4	14.4	16.3	18.3	20.3	22.2
	6	1.43	2.99	4.67	6.46	8.31	10.2	12.1	14.1	16.0	18.0	19.9	21.9
	7	1.33	2.82	4.46	6.21	8.05	9.92	11.8	13.8	15.7	17.7	19.6	21.6
	8	1.24	2.67	4.26	5.98	7.79	9.65	11.5	13.5	15.4	17.3	19.3	21.3
	9	1.16	2.52	4.08	5.76	7.55	9.39	11.3	13.2	15.1	17.0	19.0	20.9
	10	1.08	2.40	3.91	5.56	7.32	9.14	11.0	12.9	14.8	16.7	18.7	20.6
	12	0.96	2.17	3.61	5.20	6.90	8.66	10.5	12.4	14.2	16.1	18.1	20.0
	14	0.86	1.98	3.35	4.87	6.51	8.23	10.0	11.8	13.7	15.6	17.5	19.4
	16	0.77	1.82	3.11	4.57	6.15	7.81	9.56	11.4	13.2	15.1	16.9	18.9
	18	0.70	1.69	2.91	4.30	5.81	7.43	9.13	10.9	12.7	14.5	16.4	18.3
	20	0.65	1.57	2.72	4.05	5.50	7.07	8.73	10.5	12.2	14.1	15.9	17.8
	24	0.56	1.37	2.41	3.61	4.96	6.43	8.00	9.67	11.4	13.2	15.0	16.8
	28	0.49	1.22	2.15	3.25	4.49	5.88	7.38	8.97	10.6	12.3	14.1	15.9
	32	0.43	1.09	1.94	2.94	4.10	5.41	6.83	8.34	9.92	11.6	13.3	15.0
	36	0.39	0.99	1.76	2.69	3.77	5.00	6.35	7.78	9.30	10.9	12.5	14.2

Table 7-9 (continued)
Coefficients C for Eccentrically Loaded Bolt Groups
Angle = 75°

Available strength of a bolt group, ϕR_n or R_n/Ω, is determined with

$$R_n = C \times r_n$$

or

LRFD	ASD
$C_{min} = \frac{P_u}{\phi r_n}$	$C_{min} = \frac{\Omega P_a}{r_n}$

where

P = required force, P_u or P_a, kips
r_n = nominal strength per bolt, kips
e = eccentricity of P with respect to centroid of bolt group, in. (not tabulated, may be determined by geometry)
e_x = horizontal component of e, in.
s = bolt spacing, in.
C = coefficient tabulated below

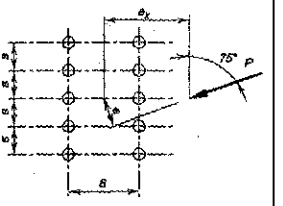

s, in.	e_x, in.	Number of Bolts in One Vertical Row, n											
		1	2	3	4	5	6	7	8	9	10	11	12
3	2	1.94	3.87	5.79	7.70	9.61	11.5	13.4	15.3	17.3	19.2	21.1	23.0
	3	1.92	3.82	5.70	7.58	9.45	11.3	13.2	15.1	17.0	18.9	20.8	22.7
	4	1.89	3.75	5.60	7.43	9.26	11.1	12.9	14.8	16.7	18.5	20.4	22.3
	5	1.85	3.67	5.48	7.28	9.07	10.9	12.7	14.5	16.4	18.2	20.1	22.0
	6	1.81	3.59	5.35	7.11	8.87	10.6	12.4	14.2	16.1	17.9	19.8	21.6
	7	1.76	3.50	5.22	6.94	8.67	10.4	12.2	14.0	15.8	17.6	19.4	21.3
	8	1.71	3.40	5.08	6.76	8.46	10.2	11.9	13.7	15.5	17.3	19.1	21.0
	9	1.66	3.30	4.94	6.59	8.26	9.96	11.7	13.4	15.2	17.0	18.8	20.6
	10	1.61	3.20	4.80	6.42	8.06	9.73	11.4	13.2	14.9	16.7	18.5	20.3
	12	1.51	3.01	4.53	6.08	7.67	9.30	11.0	12.7	14.4	16.2	17.9	19.7
	14	1.41	2.82	4.27	5.76	7.31	8.90	10.5	12.2	13.9	15.6	17.4	19.2
	16	1.31	2.65	4.03	5.47	6.96	8.52	10.1	11.8	13.4	15.2	16.9	18.6
	18	1.23	2.48	3.80	5.19	6.64	8.16	9.73	11.3	13.0	14.7	16.4	18.1
	20	1.15	2.34	3.60	4.93	6.34	7.82	9.36	10.9	12.6	14.2	15.9	17.7
	24	1.01	2.08	3.23	4.48	5.80	7.20	8.67	10.2	11.8	13.4	15.0	16.7
	28	0.90	1.87	2.93	4.08	5.33	6.65	8.06	9.52	11.0	12.6	14.2	15.9
	32	0.81	1.69	2.67	3.75	4.91	6.17	7.51	8.91	10.4	11.9	13.5	15.1
	36	0.73	1.54	2.45	3.45	4.55	5.74	7.01	8.36	9.77	11.2	12.8	14.3
6	2	1.94	3.86	5.77	7.68	9.60	11.5	13.5	15.4	17.6	19.6	21.5	23.5
	3	1.92	3.80	5.68	7.55	9.45	11.4	13.3	15.2	17.2	19.1	21.1	23.0
	4	1.89	3.74	5.57	7.42	9.29	11.2	13.1	15.0	16.9	18.9	20.8	22.8
	5	1.85	3.66	5.46	7.29	9.14	11.0	12.9	14.8	16.7	18.7	20.6	22.6
	6	1.81	3.58	5.35	7.15	8.98	10.8	12.7	14.6	16.5	18.5	20.4	22.3
	7	1.76	3.49	5.23	7.01	8.83	10.7	12.5	14.4	16.3	18.3	20.2	22.1
	8	1.71	3.40	5.12	6.88	8.68	10.5	12.4	14.3	16.2	18.1	20.0	21.9
	9	1.66	3.31	5.00	6.74	8.53	10.4	12.2	14.1	16.0	17.9	19.8	21.7
	10	1.61	3.22	4.89	6.61	8.38	10.2	12.0	13.9	15.8	17.7	19.6	21.5
	12	1.51	3.05	4.67	6.36	8.10	9.89	11.7	13.6	15.4	17.3	19.2	21.1
	14	1.41	2.88	4.46	6.12	7.84	9.61	11.4	13.3	15.1	17.0	18.9	20.8
	16	1.31	2.73	4.26	5.89	7.59	9.33	11.1	12.9	14.8	16.6	18.5	20.4
	18	1.23	2.58	4.08	5.68	7.35	9.08	10.8	12.7	14.5	16.3	18.2	20.1
	20	1.15	2.45	3.90	5.47	7.13	8.84	10.6	12.4	14.2	16.0	17.9	19.7
	24	1.01	2.21	3.59	5.10	6.71	8.38	10.1	11.9	13.6	15.5	17.3	19.1
	28	0.90	2.01	3.32	4.77	6.32	7.96	9.65	11.4	13.1	14.9	16.7	18.5
	32	0.81	1.84	3.08	4.47	5.97	7.56	9.21	10.9	12.7	14.4	16.2	18.0
	36	0.73	1.70	2.87	4.19	5.64	7.19	8.80	10.5	12.2	13.9	15.7	17.5

Table 7-10
Coefficients C for Eccentrically Loaded Bolt Groups
Angle = 0°

Available strength of a bolt group, ϕR_n or R_n/Ω, is determined with

$$R_n = C \times r_n$$

or

LRFD	ASD
$C_{min} = \dfrac{P_u}{\phi r_n}$	$C_{min} = \dfrac{\Omega P_a}{r_n}$

where

P = required force, P_u or P_a, kips
r_n = nominal strength per bolt, kips
e = eccentricity of P with respect to centroid of bolt group, in. (not tabulated, may be determined by geometry)
e_x = horizontal component of e, in.
s = bolt spacing, in.
C = coefficient tabulated below

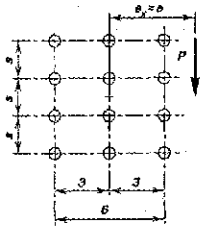

s, in.	e_x, in.	Number of Bolts in One Vertical Row, n											
		1	2	3	4	5	6	7	8	9	10	11	12
3	2	1.71	4.07	6.81	9.86	13.0	16.1	19.3	22.3	25.4	28.5	31.5	34.5
	3	1.42	3.40	5.79	8.61	11.7	14.8	18.0	21.1	24.3	27.4	30.5	33.6
	4	1.21	2.90	4.97	7.53	10.4	13.4	16.6	19.8	23.0	26.1	29.3	32.5
	5	1.05	2.51	4.34	6.64	9.24	12.1	15.2	18.3	21.5	24.7	27.9	31.1
	6	0.92	2.21	3.85	5.91	8.27	11.0	13.9	16.9	20.0	23.2	26.4	29.7
	7	0.81	1.96	3.44	5.31	7.46	9.95	12.7	15.6	18.6	21.8	25.0	28.2
	8	0.72	1.76	3.11	4.80	6.78	9.09	11.6	14.4	17.3	20.4	23.5	26.7
	9	0.64	1.60	2.83	4.38	6.20	8.34	10.7	13.3	16.1	19.1	22.1	25.2
	10	0.58	1.46	2.59	4.02	5.71	7.70	9.91	12.4	15.0	17.9	20.8	23.8
	12	0.49	1.24	2.21	3.44	4.91	6.65	8.59	10.8	13.2	15.7	18.5	21.3
	14	0.42	1.08	1.92	3.00	4.30	5.83	7.57	9.53	11.7	14.0	16.5	19.2
	16	0.37	0.95	1.70	2.66	3.82	5.19	6.75	8.51	10.5	12.6	14.9	17.3
	18	0.33	0.85	1.52	2.39	3.43	4.67	6.08	7.68	9.45	11.4	13.5	15.8
	20	0.29	0.77	1.37	2.16	3.11	4.24	5.53	6.99	8.61	10.4	12.3	14.4
	24	0.24	0.64	1.15	1.82	2.62	3.57	4.67	5.92	7.30	8.84	10.5	12.3
	28	0.21	0.55	0.99	1.57	2.26	3.08	4.04	5.12	6.33	7.67	9.13	10.7
	32	0.18	0.49	0.87	1.38	1.98	2.71	3.55	4.51	5.58	6.77	8.06	9.47
	36	0.16	0.43	0.77	1.23	1.77	2.42	3.17	4.03	4.99	6.05	7.21	8.48
	C', in.	5.89	15.8	28.0	44.7	64.3	88.5	116	148	183	223	267	315
6	2	1.71	4.85	8.04	11.2	14.2	17.3	20.3	23.2	26.2	29.2	32.2	35.1
	3	1.42	4.24	7.36	10.6	13.7	16.8	19.9	22.9	25.9	28.9	31.9	34.9
	4	1.21	3.72	6.66	9.86	13.1	16.2	19.4	22.4	25.5	28.5	31.6	34.6
	5	1.05	3.29	6.00	9.14	12.4	15.6	18.7	21.9	25.0	28.1	31.1	34.2
	6	0.92	2.93	5.41	8.44	11.6	14.9	18.1	21.2	24.4	27.5	30.6	33.7
	7	0.81	2.63	4.90	7.79	10.9	14.1	17.3	20.6	23.7	26.9	30.0	33.2
	8	0.72	2.38	4.46	7.20	10.2	13.4	16.6	19.8	23.0	26.2	29.4	32.6
	9	0.64	2.17	4.09	6.67	9.54	12.6	15.8	19.1	22.3	25.5	28.7	31.9
	10	0.58	2.00	3.78	6.20	8.94	12.0	15.1	18.3	21.6	24.8	28.0	31.2
	12	0.49	1.71	3.27	5.41	7.88	10.7	13.7	16.8	20.0	23.3	26.5	29.8
	14	0.42	1.49	2.87	4.78	7.01	9.61	12.4	15.4	18.6	21.8	25.0	28.2
	16	0.37	1.32	2.55	4.28	6.29	8.69	11.3	14.2	17.2	20.3	23.5	26.7
	18	0.33	1.19	2.30	3.86	5.70	7.91	10.4	13.1	15.9	18.9	22.0	25.2
	20	0.29	1.08	2.09	3.51	5.20	7.25	9.54	12.1	14.8	17.7	20.7	23.8
	24	0.24	0.91	1.76	2.97	4.42	6.19	8.19	10.4	12.9	15.5	18.3	21.2
	28	0.21	0.78	1.52	2.57	3.84	5.39	7.14	9.15	11.4	13.7	16.3	19.0
	32	0.18	0.69	1.33	2.27	3.39	4.77	6.33	8.13	10.1	12.3	14.6	17.1
	36	0.16	0.61	1.19	2.03	3.03	4.27	5.67	7.30	9.10	11.1	13.2	15.5
	C', in.	5.89	22.4	43.3	74.4	112	158	212	275	345	424	510	606

Table 7-10 (continued)
Coefficients C for Eccentrically Loaded Bolt Groups
Angle = 15°

Available strength of a bolt group, ϕR_n or R_n/Ω, is determined with

$$R_n = C \times r_n$$

or

LRFD	ASD
$C_{min} = \frac{P_u}{\phi r_n}$	$C_{min} = \frac{\Omega P_a}{r_n}$

where

P = required force, P_u or P_a, kips
r_n = nominal strength per bolt, kips
e = eccentricity of P with respect to centroid of bolt group, in. (not tabulated, may be determined by geometry)
e_x = horizontal component of e, in.
s = bolt spacing, in.
C = coefficient tabulated below

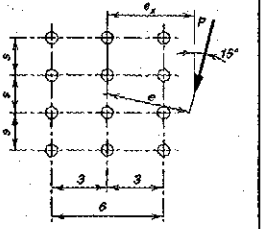

s, in.	e_x, in.	Number of Bolts in One Vertical Row, n											
		1	2	3	4	5	6	7	8	9	10	11	12
3	2	1.77	4.10	6.84	9.82	12.9	16.0	19.1	22.2	25.2	28.3	31.3	34.3
	3	1.47	3.45	5.86	8.61	11.6	14.7	17.8	20.9	24.1	27.2	30.3	33.3
	4	1.25	2.95	5.07	7.55	10.4	13.3	16.4	19.5	22.7	25.8	29.0	32.1
	5	1.08	2.57	4.44	6.67	9.26	12.1	15.1	18.1	21.3	24.4	27.6	30.7
	6	0.94	2.26	3.93	5.96	8.33	11.0	13.8	16.8	19.8	23.0	26.1	29.3
	7	0.83	2.01	3.52	5.37	7.55	9.97	12.7	15.5	18.5	21.5	24.7	27.8
	8	0.74	1.81	3.18	4.87	6.88	9.13	11.7	14.4	17.2	20.2	23.2	26.4
	9	0.66	1.64	2.90	4.45	6.31	8.40	10.8	13.3	16.1	18.9	21.9	25.0
	10	0.60	1.50	2.65	4.10	5.81	7.77	9.99	12.4	15.0	17.8	20.7	23.6
	12	0.50	1.28	2.27	3.52	5.01	6.74	8.71	10.9	13.2	15.8	18.4	21.2
	14	0.43	1.11	1.98	3.08	4.40	5.93	7.69	9.62	11.8	14.1	16.5	19.1
	16	0.38	0.98	1.75	2.73	3.91	5.29	6.87	8.62	10.6	12.7	15.0	17.4
	18	0.34	0.88	1.57	2.45	3.52	4.77	6.20	7.80	9.59	11.5	13.6	15.9
	20	0.30	0.79	1.42	2.22	3.19	4.33	5.65	7.12	8.76	10.5	12.5	14.6
	24	0.25	0.67	1.19	1.87	2.69	3.66	4.78	6.04	7.45	8.99	10.7	12.5
	28	0.22	0.57	1.02	1.61	2.32	3.17	4.14	5.24	6.47	7.82	9.31	10.9
	32	0.19	0.50	0.90	1.42	2.04	2.79	3.65	4.62	5.72	6.92	8.24	9.66
	36	0.17	0.45	0.80	1.26	1.82	2.49	3.26	4.13	5.11	6.20	7.38	8.66
6	2	1.77	4.83	7.98	11.1	14.1	17.2	20.2	23.2	26.1	29.1	32.1	35.0
	3	1.47	4.22	7.31	10.5	13.6	16.7	19.7	22.8	25.8	28.8	31.8	34.8
	4	1.25	3.71	6.64	9.77	12.9	16.1	19.2	22.3	25.3	28.3	31.4	34.4
	5	1.08	3.28	6.01	9.06	12.2	15.4	18.5	21.7	24.8	27.8	30.9	33.9
	6	0.94	2.94	5.45	8.38	11.5	14.7	17.8	21.0	24.1	27.2	30.3	33.4
	7	0.83	2.65	4.97	7.75	10.8	13.9	17.1	20.3	23.5	26.6	29.7	32.8
	8	0.74	2.40	4.55	7.17	10.1	13.2	16.4	19.6	22.7	25.9	29.1	32.2
	9	0.66	2.20	4.18	6.66	9.49	12.5	15.6	18.8	22.0	25.2	28.4	31.5
	10	0.60	2.02	3.86	6.20	8.92	11.9	14.9	18.1	21.3	24.5	27.6	30.8
	12	0.50	1.74	3.34	5.43	7.91	10.6	13.6	16.6	19.8	23.0	26.1	29.3
	14	0.43	1.52	2.94	4.82	7.07	9.60	12.4	15.3	18.4	21.5	24.6	27.8
	16	0.38	1.35	2.62	4.32	6.38	8.71	11.3	14.1	17.0	20.1	23.2	26.3
	18	0.34	1.22	2.36	3.91	5.79	7.95	10.4	13.0	15.8	18.8	21.8	24.9
	20	0.30	1.10	2.14	3.57	5.30	7.31	9.60	12.1	14.8	17.6	20.5	23.5
	24	0.25	0.93	1.81	3.03	4.52	6.26	8.28	10.5	12.9	15.5	18.2	21.1
	28	0.22	0.80	1.56	2.63	3.93	5.47	7.26	9.24	11.4	13.8	16.3	18.9
	32	0.19	0.71	1.37	2.32	3.47	4.85	6.45	8.23	10.2	12.4	14.7	17.1
	36	0.17	0.63	1.23	2.08	3.11	4.35	5.80	7.41	9.23	11.2	13.3	15.6

Table 7-10 (continued)
Coefficients C for Eccentrically Loaded Bolt Groups
Angle = 30°

Available strength of a bolt group, ϕR_n or R_n/Ω, is determined with

$$R_n = C \times r_n$$

or

LRFD	ASD
$C_{min} = \frac{P_u}{\phi r_n}$	$C_{min} = \frac{\Omega P_a}{r_n}$

where

P = required force, P_u or P_a, kips
r_n = nominal strength per bolt, kips
e = eccentricity of P with respect to centroid of bolt group, in. (not tabulated, may be determined by geometry)
e_x = horizontal component of e, in.
s = bolt spacing, in.
C = coefficient tabulated below

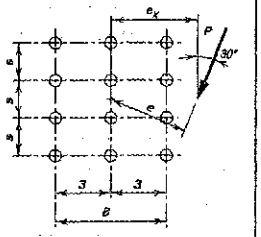

s, in.	e_x, in.	Number of Bolts in One Vertical Row, n											
		1	2	3	4	5	6	7	8	9	10	11	12
3	2	1.94	4.26	6.99	9.90	12.9	16.0	19.0	22.0	25.1	28.1	31.1	34.1
	3	1.61	3.63	6.09	8.80	11.7	14.7	17.7	20.8	23.9	27.0	30.0	33.1
	4	1.37	3.15	5.35	7.83	10.6	13.5	16.5	19.5	22.6	25.7	28.7	31.8
	5	1.19	2.77	4.74	7.00	9.54	12.3	15.2	18.2	21.2	24.3	27.4	30.5
	6	1.04	2.45	4.23	6.30	8.67	11.3	14.1	17.0	19.9	23.0	26.0	29.1
	7	0.92	2.19	3.81	5.71	7.92	10.4	13.0	15.8	18.7	21.7	24.7	27.8
	8	0.82	1.98	3.45	5.22	7.27	9.58	12.1	14.8	17.6	20.5	23.4	26.4
	9	0.74	1.80	3.16	4.79	6.71	8.88	11.2	13.8	16.5	19.3	22.2	25.2
	10	0.67	1.65	2.90	4.42	6.22	8.26	10.5	12.9	15.5	18.2	21.1	24.0
	12	0.56	1.41	2.49	3.82	5.41	7.22	9.23	11.5	13.8	16.4	19.0	21.8
	14	0.48	1.23	2.18	3.36	4.78	6.40	8.22	10.3	12.4	14.8	17.2	19.8
	16	0.42	1.08	1.93	2.99	4.26	5.73	7.40	9.25	11.3	13.4	15.7	18.2
	18	0.38	0.97	1.73	2.69	3.85	5.18	6.71	8.41	10.3	12.3	14.4	16.7
	20	0.34	0.88	1.57	2.44	3.50	4.73	6.14	7.70	9.42	11.3	13.3	15.4
	24	0.28	0.74	1.32	2.06	2.96	4.01	5.22	6.58	8.08	9.72	11.5	13.4
	28	0.24	0.64	1.14	1.78	2.56	3.48	4.54	5.73	7.05	8.51	10.1	11.8
	32	0.21	0.56	1.00	1.57	2.26	3.07	4.01	5.07	6.25	7.55	8.96	10.5
	36	0.19	0.50	0.89	1.40	2.02	2.75	3.59	4.54	5.61	6.78	8.06	9.44
6	2	1.94	4.86	7.96	11.0	14.1	17.1	20.1	23.1	26.0	29.0	32.0	35.0
	3	1.61	4.27	7.32	10.4	13.5	16.6	19.6	22.6	25.6	28.6	31.6	34.6
	4	1.37	3.78	6.70	9.75	12.9	15.9	19.0	22.1	25.1	28.1	31.1	34.2
	5	1.19	3.39	6.14	9.10	12.2	15.3	18.4	21.5	24.5	27.6	30.6	33.7
	6	1.04	3.06	5.64	8.48	11.5	14.6	17.7	20.8	23.9	27.0	30.1	33.1
	7	0.92	2.78	5.19	7.91	10.9	13.9	17.0	20.1	23.2	26.3	29.4	32.5
	8	0.82	2.54	4.80	7.38	10.3	13.3	16.3	19.4	22.6	25.7	28.8	31.9
	9	0.74	2.34	4.45	6.90	9.67	12.6	15.7	18.7	21.9	25.0	28.1	31.2
	10	0.67	2.16	4.14	6.46	9.14	12.0	15.0	18.1	21.2	24.3	27.4	30.5
	12	0.56	1.87	3.61	5.71	8.20	10.9	13.8	16.8	19.8	22.9	26.0	29.1
	14	0.48	1.65	3.20	5.10	7.41	9.95	12.7	15.6	18.5	21.5	24.6	27.7
	16	0.42	1.47	2.86	4.60	6.74	9.12	11.7	14.5	17.3	20.3	23.3	26.4
	18	0.38	1.33	2.58	4.19	6.17	8.39	10.8	13.5	16.2	19.1	22.0	25.0
	20	0.34	1.21	2.35	3.84	5.68	7.75	10.1	12.6	15.2	18.0	20.9	23.8
	24	0.28	1.02	2.00	3.29	4.89	6.71	8.78	11.1	13.5	16.1	18.8	21.6
	28	0.24	0.88	1.73	2.86	4.28	5.90	7.77	9.83	12.1	14.5	17.0	19.6
	32	0.21	0.78	1.52	2.54	3.80	5.25	6.95	8.83	10.9	13.1	15.4	17.9
	36	0.19	0.70	1.36	2.27	3.41	4.73	6.28	8.00	9.88	11.9	14.1	16.4

Table 7-10 (continued)
Coefficients C for Eccentrically Loaded Bolt Groups
Angle = 45°

Available strength of a bolt group, ϕR_n or R_n/Ω, is determined with

$$R_n = C \times r_n$$

or

LRFD	ASD
$C_{min} = \frac{P_u}{\phi r_n}$	$C_{min} = \frac{\Omega P_a}{r_n}$

where

P = required force, P_u or P_a, kips
r_n = nominal strength per bolt, kips
e = eccentricity of P with respect to centroid of bolt group, in. (not tabulated, may be determined by geometry)
e_x = horizontal component of e, in.
s = bolt spacing, in.
C = coefficient tabulated below

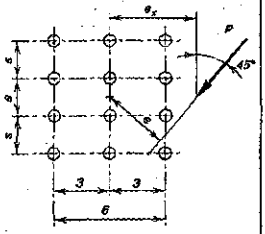

s, in.	e_x, in.	Number of Bolts in One Vertical Row, n											
		1	2	3	4	5	6	7	8	9	10	11	12
3	2	2.23	4.67	7.33	10.2	13.1	16.0	19.0	22.0	25.0	28.0	31.0	33.9
	3	1.89	4.06	6.50	9.19	12.0	14.9	17.9	20.9	23.9	26.9	29.9	32.9
	4	1.63	3.57	5.84	8.36	11.1	13.9	16.8	19.7	22.7	25.7	28.7	31.7
	5	1.42	3.17	5.27	7.63	10.2	12.9	15.7	18.6	21.5	24.5	27.5	30.5
	6	1.25	2.84	4.78	6.99	9.40	12.0	14.7	17.6	20.4	23.4	26.3	29.3
	7	1.11	2.57	4.36	6.42	8.70	11.2	13.8	16.6	19.4	22.3	25.2	28.2
	8	0.99	2.33	3.99	5.92	8.09	10.5	13.0	15.7	18.4	21.2	24.1	27.0
	9	0.90	2.13	3.68	5.49	7.54	9.80	12.2	14.8	17.5	20.3	23.1	26.0
	10	0.81	1.96	3.40	5.10	7.05	9.21	11.6	14.0	16.6	19.3	22.1	24.9
	12	0.68	1.68	2.95	4.46	6.22	8.19	10.4	12.7	15.1	17.7	20.3	23.0
	14	0.59	1.47	2.59	3.95	5.55	7.35	9.34	11.5	13.8	16.2	18.7	21.3
	16	0.52	1.31	2.31	3.54	4.99	6.65	8.49	10.5	12.7	14.9	17.3	19.8
	18	0.46	1.17	2.08	3.20	4.54	6.06	7.77	9.64	11.7	13.8	16.1	18.5
	20	0.41	1.06	1.89	2.92	4.15	5.56	7.15	8.90	10.8	12.8	15.0	17.2
	24	0.35	0.90	1.60	2.48	3.54	4.76	6.15	7.70	9.39	11.2	13.1	15.2
	28	0.30	0.77	1.38	2.15	3.08	4.16	5.39	6.77	8.28	9.91	11.7	13.5
	32	0.26	0.68	1.22	1.90	2.72	3.68	4.79	6.03	7.39	8.87	10.5	12.2
	36	0.23	0.61	1.08	1.69	2.44	3.30	4.30	5.42	6.66	8.02	9.49	11.1
6	2	2.23	5.02	8.01	11.0	14.0	17.0	20.0	23.0	25.9	28.9	31.9	34.8
	3	1.89	4.50	7.44	10.4	13.5	16.5	19.5	22.5	25.5	28.4	31.4	34.4
	4	1.63	4.05	6.89	9.86	12.9	15.9	18.9	21.9	24.9	27.9	30.9	33.9
	5	1.42	3.68	6.40	9.30	12.3	15.3	18.3	21.3	24.4	27.4	30.4	33.4
	6	1.25	3.36	5.96	8.78	11.7	14.7	17.7	20.7	23.8	26.8	29.8	32.8
	7	1.11	3.09	5.57	8.29	11.2	14.1	17.1	20.1	23.2	26.2	29.2	32.3
	8	0.99	2.86	5.22	7.84	10.6	13.6	16.5	19.5	22.6	25.6	28.6	31.7
	9	0.90	2.65	4.90	7.43	10.2	13.0	16.0	19.0	22.0	25.0	28.0	31.1
	10	0.81	2.47	4.61	7.04	9.69	12.5	15.4	18.4	21.4	24.4	27.4	30.4
	12	0.68	2.16	4.11	6.35	8.85	11.6	14.4	17.3	20.2	23.2	26.2	29.2
	14	0.59	1.92	3.69	5.76	8.11	10.7	13.4	16.2	19.1	22.1	25.0	28.0
	16	0.52	1.72	3.34	5.25	7.47	9.94	12.6	15.3	18.1	21.0	23.9	26.9
	18	0.46	1.56	3.04	4.82	6.91	9.26	11.8	14.4	17.2	20.0	22.9	25.8
	20	0.41	1.43	2.79	4.44	6.43	8.66	11.1	13.6	16.3	19.0	21.9	24.7
	24	0.35	1.22	2.38	3.84	5.62	7.64	9.84	12.2	14.7	17.3	20.0	22.8
	28	0.30	1.06	2.08	3.37	4.98	6.81	8.82	11.0	13.4	15.8	18.4	21.1
	32	0.26	0.94	1.84	3.00	4.46	6.12	7.97	10.0	12.2	14.6	17.0	19.5
	36	0.23	0.84	1.65	2.71	4.04	5.56	7.27	9.18	11.2	13.4	15.7	18.1

Table 7-10 (continued)
Coefficients C for Eccentrically Loaded Bolt Groups
Angle = 60°

Available strength of a bolt group, ϕR_n or R_n/Ω, is determined with

$$R_n = C \times r_n$$

or

LRFD	ASD
$C_{min} = \dfrac{P_u}{\phi r_n}$	$C_{min} = \dfrac{\Omega P_a}{r_n}$

where

P = required force, P_u or P_a, kips
r_n = nominal strength per bolt, kips
e = eccentricity of P with respect to centroid of bolt group, in. (not tabulated, may be determined by geometry)
e_x = horizontal component of e, in.
s = bolt spacing, in.
C = coefficient tabulated below

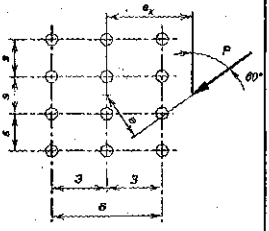

s, in.	e_x, in.	Number of Bolts in One Vertical Row, n											
		1	2	3	4	5	6	7	8	9	10	11	12
3	2	2.59	5.21	7.88	10.6	13.4	16.3	19.2	22.1	25.0	28.0	30.9	33.9
	3	2.32	4.73	7.27	9.91	12.7	15.5	18.3	21.2	24.1	27.0	30.0	32.9
	4	2.07	4.29	6.69	9.23	11.9	14.6	17.5	20.3	23.2	26.1	29.0	32.0
	5	1.84	3.90	6.18	8.63	11.2	13.9	16.6	19.5	22.3	25.2	28.1	31.0
	6	1.65	3.56	5.73	8.08	10.6	13.2	15.9	18.7	21.5	24.3	27.2	30.1
	7	1.49	3.27	5.32	7.59	10.0	12.6	15.2	17.9	20.7	23.5	26.3	29.2
	8	1.35	3.01	4.95	7.13	9.48	12.0	14.5	17.2	19.9	22.7	25.5	28.4
	9	1.23	2.78	4.63	6.71	8.98	11.4	13.9	16.5	19.2	22.0	24.7	27.6
	10	1.12	2.58	4.34	6.33	8.52	10.9	13.3	15.9	18.5	21.2	24.0	26.8
	12	0.95	2.25	3.84	5.67	7.70	9.91	12.3	14.7	17.3	19.9	22.6	25.3
	14	0.83	1.98	3.43	5.11	7.00	9.08	11.3	13.7	16.1	18.7	21.3	23.9
	16	0.73	1.77	3.09	4.64	6.40	8.36	10.5	12.7	15.1	17.5	20.1	22.6
	18	0.65	1.60	2.81	4.24	5.89	7.73	9.74	11.9	14.2	16.5	19.0	21.5
	20	0.59	1.46	2.57	3.90	5.44	7.19	9.09	11.1	13.3	15.6	17.9	20.4
	24	0.49	1.24	2.20	3.35	4.72	6.27	7.99	9.85	11.9	14.0	16.2	18.5
	28	0.42	1.07	1.91	2.93	4.15	5.55	7.10	8.81	10.7	12.6	14.7	16.8
	32	0.37	0.95	1.69	2.60	3.70	4.97	6.38	7.95	9.65	11.5	13.4	15.4
	36	0.33	0.85	1.51	2.34	3.34	4.49	5.79	7.23	8.81	10.5	12.3	14.2
6	2	2.59	5.32	8.17	11.1	14.0	17.0	19.9	22.9	25.8	28.8	31.8	34.7
	3	2.32	4.94	7.73	10.6	13.5	16.5	19.4	22.4	25.4	28.3	31.3	34.3
	4	2.07	4.57	7.31	10.2	13.1	16.0	19.0	21.9	24.9	27.8	30.8	33.8
	5	1.84	4.25	6.91	9.73	12.6	15.5	18.5	21.4	24.4	27.4	30.3	33.3
	6	1.65	3.95	6.55	9.32	12.2	15.1	18.0	20.9	23.9	26.9	29.8	32.8
	7	1.49	3.69	6.22	8.94	11.8	14.6	17.5	20.5	23.4	26.4	29.3	32.3
	8	1.35	3.46	5.92	8.58	11.4	14.2	17.1	20.0	22.9	25.9	28.8	31.8
	9	1.23	3.25	5.64	8.25	11.0	13.8	16.7	19.6	22.5	25.4	28.4	31.3
	10	1.12	3.06	5.39	7.94	10.6	13.4	16.3	19.1	22.0	24.9	27.9	30.8
	12	0.95	2.73	4.92	7.37	9.97	12.7	15.5	18.3	21.2	24.1	27.0	29.9
	14	0.83	2.46	4.52	6.85	9.36	12.0	14.7	17.5	20.3	23.2	26.1	29.0
	16	0.73	2.23	4.18	6.39	8.80	11.4	14.0	16.8	19.6	22.4	25.3	28.1
	18	0.65	2.04	3.87	5.97	8.28	10.8	13.4	16.1	18.8	21.6	24.4	27.3
	20	0.59	1.88	3.60	5.59	7.81	10.2	12.8	15.4	18.1	20.9	23.7	26.5
	24	0.49	1.63	3.15	4.94	6.99	9.25	11.7	14.2	16.8	19.5	22.2	25.0
	28	0.42	1.43	2.79	4.41	6.31	8.44	10.7	13.1	15.7	18.2	20.9	23.6
	32	0.37	1.27	2.49	3.97	5.74	7.74	9.90	12.2	14.6	17.1	19.7	22.3
	36	0.33	1.15	2.25	3.61	5.26	7.13	9.17	11.4	13.7	16.1	18.6	21.1

Table 7-10 (continued)
Coefficients C for Eccentrically Loaded Bolt Groups
Angle = 75°

Available strength of a bolt group, ϕR_n or R_n/Ω, is determined with

$$R_n = C \times r_n$$

or

LRFD	ASD
$C_{min} = \frac{P_u}{\phi r_n}$	$C_{min} = \frac{\Omega P_a}{r_n}$

where

P = required force, P_u or P_a, kips
r_n = nominal strength per bolt, kips
e = eccentricity of P with respect to centroid of bolt group, in. (not tabulated, may be determined by geometry)
e_x = horizontal component of e, in.
s = bolt spacing, in.
C = coefficient tabulated below

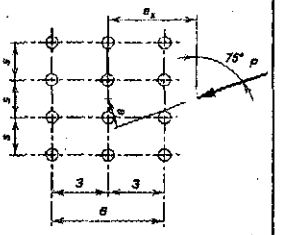

s, in.	e_x, in.	Number of Bolts in One Vertical Row, n											
		1	2	3	4	5	6	7	8	9	10	11	12
3	2	2.86	5.68	8.47	11.3	14.1	16.9	19.8	22.6	25.5	28.4	31.3	34.2
	3	2.77	5.49	8.19	10.9	13.7	16.4	19.2	22.1	24.9	27.8	30.7	33.6
	4	2.66	5.27	7.89	10.5	13.2	16.0	18.8	21.6	24.4	27.2	30.1	33.0
	5	2.53	5.04	7.58	10.2	12.8	15.5	18.3	21.0	23.9	26.7	29.5	32.4
	6	2.40	4.81	7.27	9.81	12.4	15.1	17.8	20.6	23.3	26.2	29.0	31.8
	7	2.26	4.57	6.97	9.47	12.0	14.7	17.4	20.1	22.9	25.6	28.4	31.3
	8	2.13	4.35	6.69	9.13	11.7	14.3	16.9	19.6	22.4	25.1	27.9	30.7
	9	2.00	4.13	6.41	8.82	11.3	13.9	16.5	19.2	21.9	24.7	27.4	30.2
	10	1.89	3.93	6.15	8.51	11.0	13.5	16.1	18.8	21.5	24.2	27.0	29.8
	12	1.67	3.57	5.67	7.95	10.4	12.9	15.4	18.0	20.7	23.4	26.1	28.8
	14	1.49	3.25	5.25	7.44	9.77	12.2	14.7	17.3	19.9	22.6	25.3	28.0
	16	1.34	2.97	4.87	6.98	9.23	11.6	14.1	16.6	19.2	21.8	24.5	27.2
	18	1.21	2.73	4.54	6.56	8.74	11.1	13.5	16.0	18.5	21.1	23.7	26.4
	20	1.10	2.53	4.24	6.18	8.28	10.5	12.9	15.3	17.8	20.4	23.0	25.6
	24	0.93	2.19	3.75	5.52	7.48	9.59	11.8	14.2	16.6	19.1	21.6	24.2
	28	0.80	1.93	3.34	4.97	6.79	8.78	10.9	13.2	15.5	17.9	20.4	22.9
	32	0.71	1.72	3.01	4.51	6.20	8.08	10.1	12.3	14.5	16.8	19.2	21.7
	36	0.63	1.55	2.74	4.12	5.70	7.47	9.40	11.5	13.6	15.9	18.2	20.6
6	2	2.86	5.66	8.48	11.3	14.2	17.1	20.1	23.0	26.4	29.3	32.3	35.2
	3	2.77	5.49	8.25	11.1	13.9	16.8	19.7	22.7	25.6	28.5	31.5	34.4
	4	2.66	5.30	8.02	10.8	13.6	16.5	19.4	22.3	25.2	28.2	31.1	34.0
	5	2.53	5.10	7.79	10.6	13.4	16.2	19.1	22.0	24.9	27.8	30.8	33.7
	6	2.40	4.91	7.56	10.3	13.1	15.9	18.8	21.7	24.6	27.5	30.4	33.3
	7	2.26	4.72	7.34	10.1	12.9	15.7	18.5	21.4	24.3	27.2	30.1	33.0
	8	2.13	4.54	7.14	9.83	12.6	15.4	18.3	21.1	24.0	26.9	29.8	32.7
	9	2.00	4.37	6.94	9.61	12.4	15.2	18.0	20.8	23.7	26.6	29.5	32.4
	10	1.89	4.21	6.75	9.40	12.1	14.9	17.7	20.6	23.4	26.3	29.2	32.1
	12	1.67	3.90	6.39	9.00	11.7	14.4	17.2	20.0	22.9	25.7	28.6	31.5
	14	1.49	3.63	6.06	8.63	11.3	14.0	16.8	19.6	22.4	25.2	28.1	30.9
	16	1.34	3.39	5.75	8.29	10.9	13.6	16.3	19.1	21.9	24.7	27.5	30.4
	18	1.21	3.17	5.47	7.96	10.6	13.2	15.9	18.7	21.4	24.2	27.0	29.9
	20	1.10	2.98	5.22	7.66	10.2	12.9	15.5	18.2	21.0	23.8	26.6	29.4
	24	0.93	2.65	4.76	7.10	9.57	12.2	14.8	17.5	20.2	22.9	25.7	28.5
	28	0.80	2.38	4.37	6.60	8.99	11.5	14.1	16.7	19.4	22.1	24.8	27.6
	32	0.71	2.16	4.03	6.15	8.45	10.9	13.4	16.0	18.7	21.3	24.0	26.8
	36	0.63	1.97	3.73	5.75	7.96	10.3	12.8	15.3	17.9	20.6	23.3	26.0

Table 7-11
Coefficients C for Eccentrically Loaded Bolt Groups
Angle = 0°

Available strength of a bolt group, ϕR_n or R_n/Ω, is determined with

$$R_n = C \times r_n$$

or

LRFD	ASD
$C_{min} = \dfrac{P_u}{\phi r_n}$	$C_{min} = \dfrac{\Omega P_a}{r_n}$

where

P = required force, P_u or P_a, kips
r_n = nominal strength per bolt, kips
e = eccentricity of P with respect to centroid of bolt group, in. (not tabulated, may be determined by geometry)
e_x = horizontal component of e, in.
s = bolt spacing, in.
C = coefficient tabulated below

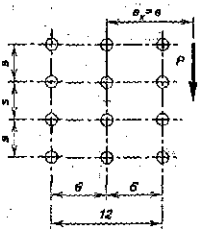

s, in.	e_x, in.	Number of Bolts in One Vertical Row, n											
		1	2	3	4	5	6	7	8	9	10	11	12
3	2	2.15	4.55	7.17	10.0	13.0	16.0	19.1	22.2	25.3	28.3	31.4	34.4
	3	1.91	4.06	6.43	9.06	11.9	14.9	17.9	21.0	24.1	27.2	30.3	33.4
	4	1.71	3.65	5.80	8.23	10.9	13.7	16.7	19.8	22.9	26.0	29.1	32.3
	5	1.55	3.31	5.27	7.51	9.97	12.7	15.5	18.5	21.5	24.7	27.8	31.0
	6	1.42	3.02	4.82	6.88	9.16	11.7	14.4	17.3	20.3	23.3	26.4	29.6
	7	1.31	2.77	4.44	6.34	8.46	10.8	13.4	16.1	19.0	22.0	25.1	28.2
	8	1.21	2.56	4.10	5.87	7.85	10.1	12.5	15.1	17.9	20.7	23.7	26.8
	9	1.12	2.38	3.81	5.46	7.31	9.39	11.7	14.1	16.8	19.6	22.5	25.5
	10	1.05	2.21	3.55	5.09	6.84	8.79	10.9	13.3	15.8	18.5	21.3	24.2
	12	0.92	1.94	3.12	4.48	6.03	7.78	9.70	11.8	14.1	16.6	19.1	21.9
	14	0.81	1.72	2.77	3.99	5.38	6.95	8.69	10.6	12.7	14.9	17.3	19.9
	16	0.72	1.53	2.48	3.58	4.84	6.27	7.85	9.60	11.5	13.6	15.8	18.1
	18	0.64	1.38	2.25	3.25	4.40	5.70	7.15	8.75	10.5	12.4	14.4	16.6
	20	0.58	1.26	2.05	2.96	4.02	5.21	6.55	8.03	9.65	11.4	13.3	15.3
	24	0.49	1.06	1.73	2.52	3.42	4.45	5.60	6.88	8.29	9.82	11.5	13.2
	28	0.42	0.92	1.50	2.19	2.97	3.87	4.88	6.00	7.24	8.59	10.1	11.6
	32	0.37	0.81	1.32	1.93	2.63	3.42	4.32	5.32	6.42	7.62	8.93	10.3
	36	0.33	0.72	1.18	1.72	2.35	3.06	3.87	4.77	5.76	6.84	8.02	9.29
	C', in.	11.8	26.5	43.3	63.7	86.8	114	144	178	216	257	302	352
6	2	2.15	4.94	7.98	11.1	14.2	17.2	20.2	23.2	26.2	29.2	32.1	35.1
	3	1.91	4.48	7.39	10.5	13.6	16.7	19.8	22.8	25.8	28.9	31.9	34.8
	4	1.71	4.07	6.81	9.86	13.0	16.1	19.3	22.3	25.4	28.5	31.5	34.5
	5	1.55	3.71	6.27	9.22	12.3	15.5	18.6	21.8	24.9	28.0	31.0	34.1
	6	1.42	3.40	5.79	8.61	11.7	14.8	18.0	21.1	24.3	27.4	30.5	33.6
	7	1.31	3.13	5.35	8.05	11.0	14.1	17.3	20.5	23.6	26.8	29.9	33.1
	8	1.21	2.90	4.97	7.53	10.4	13.4	16.6	19.8	23.0	26.1	29.3	32.5
	9	1.12	2.69	4.64	7.07	9.78	12.8	15.9	19.0	22.2	25.4	28.6	31.8
	10	1.05	2.51	4.34	6.64	9.24	12.1	15.2	18.3	21.5	24.7	27.9	31.1
	12	0.92	2.21	3.85	5.91	8.27	11.0	13.9	16.9	20.0	23.2	26.4	29.7
	14	0.81	1.96	3.44	5.31	7.46	9.95	12.7	15.6	18.6	21.8	25.0	28.2
	16	0.72	1.76	3.11	4.80	6.78	9.09	11.6	14.4	17.3	20.4	23.5	26.7
	18	0.64	1.60	2.83	4.38	6.20	8.34	10.7	13.3	16.1	19.1	22.1	25.2
	20	0.58	1.46	2.59	4.02	5.71	7.70	9.91	12.4	15.0	17.9	20.8	23.8
	24	0.49	1.24	2.21	3.44	4.91	6.65	8.59	10.8	13.2	15.7	18.5	21.3
	28	0.42	1.08	1.92	3.00	4.30	5.83	7.57	9.53	11.7	14.0	16.5	19.2
	32	0.37	0.95	1.70	2.66	3.82	5.19	6.75	8.51	10.5	12.6	14.9	17.3
	36	0.33	0.85	1.52	2.39	3.43	4.67	6.08	7.68	9.45	11.4	13.5	15.8
	C', in.	11.8	31.6	56.1	89.4	129	177	232	296	366	446	533	629

Table 7-11 (continued)
Coefficients C for Eccentrically Loaded Bolt Groups
Angle = 15°

Available strength of a bolt group, ϕR_n or R_n/Ω, is determined with

$$R_n = C \times r_n$$

or

LRFD	ASD
$C_{min} = \frac{P_u}{\phi r_n}$	$C_{min} = \frac{\Omega P_a}{r_n}$

where

P = required force, P_u or P_a, kips
r_n = nominal strength per bolt, kips
e = eccentricity of P with respect to centroid of bolt group, in. (not tabulated, may be determined by geometry)
e_x = horizontal component of e, in.
s = bolt spacing, in.
C = coefficient tabulated below

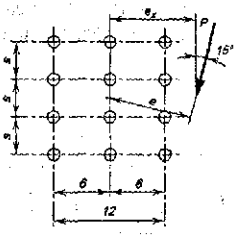

s, in.	e_x, in.	Number of Bolts in One Vertical Row, n											
		1	2	3	4	5	6	7	8	9	10	11	12
3	2	2.22	4.62	7.25	10.1	13.0	16.0	19.0	22.1	25.1	28.2	31.2	34.2
	3	1.97	4.13	6.53	9.13	11.9	14.9	17.9	20.9	24.0	27.1	30.1	33.2
	4	1.77	3.72	5.91	8.31	10.9	13.7	16.7	19.7	22.7	25.8	28.9	32.0
	5	1.61	3.38	5.39	7.60	10.1	12.7	15.5	18.4	21.4	24.5	27.6	30.7
	6	1.47	3.10	4.93	6.98	9.28	11.8	14.4	17.2	20.2	23.2	26.2	29.3
	7	1.35	2.85	4.54	6.45	8.59	10.9	13.5	16.1	19.0	21.9	24.9	27.9
	8	1.25	2.63	4.21	5.98	7.98	10.2	12.6	15.1	17.8	20.7	23.6	26.6
	9	1.16	2.44	3.91	5.57	7.45	9.51	11.8	14.2	16.8	19.5	22.4	25.3
	10	1.08	2.28	3.65	5.21	6.97	8.92	11.1	13.4	15.9	18.5	21.2	24.1
	12	0.94	2.00	3.20	4.59	6.16	7.91	9.84	11.9	14.2	16.6	19.2	21.9
	14	0.83	1.77	2.85	4.09	5.50	7.08	8.84	10.8	12.8	15.0	17.4	19.9
	16	0.74	1.58	2.56	3.68	4.96	6.40	8.00	9.75	11.7	13.7	15.9	18.2
	18	0.66	1.43	2.31	3.34	4.51	5.83	7.30	8.91	10.7	12.6	14.6	16.8
	20	0.60	1.30	2.11	3.05	4.13	5.34	6.70	8.19	9.82	11.6	13.5	15.5
	24	0.50	1.10	1.79	2.59	3.52	4.56	5.74	7.03	8.45	10.0	11.7	13.4
	28	0.43	0.95	1.55	2.25	3.06	3.98	5.01	6.15	7.40	8.77	10.2	11.8
	32	0.38	0.84	1.37	1.99	2.70	3.52	4.43	5.45	6.57	7.79	9.12	10.5
	36	0.34	0.75	1.22	1.78	2.42	3.15	3.98	4.89	5.90	7.01	8.20	9.49
6	2	2.22	4.97	7.97	11.0	14.1	17.1	20.1	23.1	26.1	29.1	32.1	35.0
	3	1.97	4.50	7.40	10.5	13.5	16.6	19.7	22.7	25.7	28.7	31.7	34.7
	4	1.77	4.10	6.84	9.82	12.9	16.0	19.1	22.2	25.2	28.3	31.3	34.3
	5	1.61	3.75	6.32	9.20	12.3	15.4	18.5	21.6	24.7	27.8	30.8	33.9
	6	1.47	3.45	5.86	8.61	11.6	14.7	17.8	20.9	24.1	27.2	30.3	33.3
	7	1.35	3.18	5.44	8.06	11.0	14.0	17.1	20.3	23.4	26.5	29.6	32.7
	8	1.25	2.95	5.07	7.55	10.4	13.3	16.4	19.5	22.7	25.8	29.0	32.1
	9	1.16	2.75	4.73	7.09	9.78	12.7	15.7	18.8	22.0	25.1	28.3	31.4
	10	1.08	2.57	4.44	6.67	9.26	12.1	15.1	18.1	21.3	24.4	27.6	30.7
	12	0.94	2.26	3.93	5.96	8.33	11.0	13.8	16.8	19.8	23.0	26.1	29.3
	14	0.83	2.01	3.52	5.37	7.55	9.97	12.7	15.5	18.5	21.5	24.7	27.8
	16	0.74	1.81	3.18	4.87	6.88	9.13	11.7	14.4	17.2	20.2	23.2	26.4
	18	0.66	1.64	2.90	4.45	6.31	8.40	10.8	13.3	16.1	18.9	21.9	25.0
	20	0.60	1.50	2.65	4.10	5.81	7.77	9.99	12.4	15.0	17.8	20.7	23.6
	24	0.50	1.28	2.27	3.52	5.01	6.74	8.71	10.9	13.2	15.8	18.4	21.2
	28	0.43	1.11	1.98	3.08	4.40	5.93	7.69	9.62	11.8	14.1	16.5	19.1
	32	0.38	0.98	1.75	2.73	3.91	5.29	6.87	8.62	10.6	12.7	15.0	17.4
	36	0.34	0.88	1.57	2.45	3.52	4.77	6.20	7.80	9.59	11.5	13.6	15.9

Table 7-11 (continued)
Coefficients C for Eccentrically Loaded Bolt Groups
Angle = 30°

Available strength of a bolt group, ϕR_n or R_n/Ω, is determined with

$$R_n = C \times r_n$$

or

LRFD	ASD
$C_{min} = \frac{P_u}{\phi r_n}$	$C_{min} = \frac{\Omega P_a}{r_n}$

where

P = required force, P_u or P_a, kips
r_n = nominal strength per bolt, kips
e = eccentricity of P with respect to centroid of bolt group, in. (not tabulated, may be determined by geometry)
e_x = horizontal component of e, in.
s = bolt spacing, in.
C = coefficient tabulated below

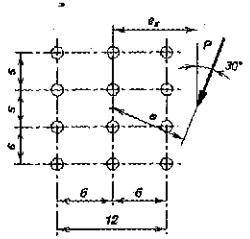

s, in.	e_x, in.	Number of Bolts in One Vertical Row, n											
		1	2	3	4	5	6	7	8	9	10	11	12
3	2	2.40	4.89	7.53	10.3	13.2	16.1	19.1	22.1	25.1	28.1	31.1	34.1
	3	2.15	4.40	6.84	9.45	12.2	15.1	18.0	21.0	24.0	27.0	30.0	33.0
	4	1.94	3.99	6.24	8.69	11.3	14.0	16.9	19.8	22.8	25.8	28.8	31.9
	5	1.76	3.65	5.74	8.02	10.5	13.1	15.8	18.7	21.6	24.6	27.6	30.6
	6	1.61	3.35	5.29	7.42	9.72	12.2	14.8	17.6	20.4	23.4	26.3	29.3
	7	1.49	3.10	4.90	6.89	9.06	11.4	13.9	16.6	19.3	22.2	25.1	28.1
	8	1.37	2.87	4.55	6.42	8.47	10.7	13.1	15.6	18.3	21.1	23.9	26.9
	9	1.28	2.67	4.24	6.00	7.94	10.1	12.4	14.8	17.4	20.0	22.8	25.7
	10	1.19	2.49	3.97	5.63	7.47	9.49	11.7	14.0	16.5	19.1	21.8	24.6
	12	1.04	2.19	3.50	4.98	6.64	8.48	10.5	12.6	14.9	17.3	19.9	22.5
	14	0.92	1.95	3.12	4.46	5.97	7.64	9.46	11.4	13.6	15.8	18.2	20.7
	16	0.82	1.75	2.81	4.03	5.40	6.93	8.61	10.4	12.4	14.5	16.7	19.1
	18	0.74	1.58	2.55	3.66	4.92	6.33	7.89	9.59	11.4	13.4	15.5	17.7
	20	0.67	1.44	2.33	3.35	4.52	5.82	7.27	8.85	10.6	12.4	14.4	16.4
	24	0.56	1.22	1.98	2.86	3.87	5.00	6.26	7.65	9.16	10.8	12.5	14.4
	28	0.48	1.06	1.72	2.49	3.37	4.37	5.48	6.71	8.06	9.51	11.1	12.8
	32	0.42	0.93	1.52	2.20	2.99	3.88	4.87	5.97	7.18	8.49	9.91	11.4
	36	0.38	0.83	1.36	1.97	2.68	3.48	4.38	5.38	6.47	7.66	8.95	10.3
6	2	2.40	5.11	8.05	11.1	14.1	17.1	20.1	23.0	26.0	29.0	32.0	34.9
	3	2.15	4.66	7.51	10.5	13.5	16.5	19.6	22.6	25.6	28.6	31.6	34.6
	4	1.94	4.26	6.99	9.90	12.9	16.0	19.0	22.0	25.1	28.1	31.1	34.1
	5	1.76	3.92	6.52	9.34	12.3	15.3	18.4	21.5	24.5	27.6	30.6	33.6
	6	1.61	3.63	6.09	8.80	11.7	14.7	17.7	20.8	23.9	27.0	30.0	33.1
	7	1.49	3.38	5.70	8.30	11.1	14.1	17.1	20.2	23.2	26.3	29.4	32.5
	8	1.37	3.15	5.35	7.83	10.6	13.5	16.5	19.5	22.6	25.7	28.7	31.8
	9	1.28	2.95	5.03	7.40	10.0	12.9	15.8	18.8	21.9	25.0	28.1	31.2
	10	1.19	2.77	4.74	7.00	9.54	12.3	15.2	18.2	21.2	24.3	27.4	30.5
	12	1.04	2.45	4.23	6.30	8.67	11.3	14.1	17.0	19.9	23.0	26.0	29.1
	14	0.92	2.19	3.81	5.71	7.92	10.4	13.0	15.8	18.7	21.7	24.7	27.8
	16	0.82	1.98	3.45	5.22	7.27	9.58	12.1	14.8	17.6	20.5	23.4	26.4
	18	0.74	1.80	3.16	4.79	6.71	8.88	11.2	13.8	16.5	19.3	22.2	25.2
	20	0.67	1.65	2.90	4.42	6.22	8.26	10.5	12.9	15.5	18.2	21.1	24.0
	24	0.56	1.41	2.49	3.82	5.41	7.22	9.23	11.5	13.8	16.4	19.0	21.8
	28	0.48	1.23	2.18	3.36	4.78	6.40	8.22	10.3	12.4	14.8	17.2	19.8
	32	0.42	1.08	1.93	2.99	4.26	5.73	7.40	9.25	11.3	13.4	15.7	18.2
	36	0.38	0.97	1.73	2.69	3.85	5.18	6.71	8.41	10.3	12.3	14.4	16.7

Table 7-11 (continued)
Coefficients *C* for Eccentrically Loaded Bolt Groups
Angle = 45°

Available strength of a bolt group, ϕR_n or R_n/Ω, is determined with

$$R_n = C \times r_n$$

or

LRFD	ASD
$C_{min} = \frac{P_u}{\phi r_n}$	$C_{min} = \frac{\Omega P_a}{r_n}$

where

P = required force, P_u or P_a, kips
r_n = nominal strength per bolt, kips
e = eccentricity of P with respect to centroid of bolt group, in. (not tabulated, may be determined by geometry)
e_x = horizontal component of e, in.
s = bolt spacing, in.
C = coefficient tabulated below

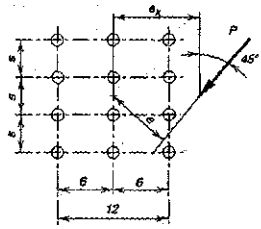

s, in.	e_x, in.	Number of Bolts in One Vertical Row, n											
		1	2	3	4	5	6	7	8	9	10	11	12
3	2	2.64	5.30	8.01	10.8	13.6	16.4	19.3	22.3	25.2	28.1	31.1	34.0
	3	2.43	4.90	7.44	10.1	12.8	15.6	18.4	21.3	24.2	27.1	30.1	33.1
	4	2.23	4.52	6.89	9.38	12.0	14.7	17.5	20.3	23.2	26.1	29.0	32.0
	5	2.05	4.17	6.40	8.75	11.2	13.9	16.6	19.3	22.2	25.0	27.9	30.9
	6	1.89	3.86	5.96	8.20	10.6	13.1	15.7	18.4	21.2	24.0	26.9	29.8
	7	1.75	3.59	5.57	7.70	9.99	12.4	14.9	17.5	20.2	23.0	25.8	28.7
	8	1.63	3.35	5.22	7.25	9.43	11.7	14.2	16.7	19.3	22.1	24.8	27.7
	9	1.52	3.13	4.90	6.83	8.91	11.1	13.5	15.9	18.5	21.2	23.9	26.7
	10	1.42	2.94	4.61	6.45	8.44	10.6	12.8	15.2	17.7	20.3	23.0	25.7
	12	1.25	2.60	4.11	5.78	7.60	9.58	11.7	14.0	16.3	18.8	21.3	23.9
	14	1.11	2.32	3.69	5.21	6.90	8.73	10.7	12.8	15.0	17.4	19.8	22.3
	16	0.99	2.09	3.34	4.74	6.29	8.00	9.85	11.8	13.9	16.1	18.5	20.9
	18	0.90	1.90	3.04	4.33	5.77	7.36	9.10	11.0	12.9	15.0	17.3	19.5
	20	0.81	1.73	2.79	3.98	5.33	6.81	8.44	10.2	12.1	14.1	16.2	18.4
	24	0.68	1.47	2.38	3.42	4.60	5.91	7.35	8.91	10.6	12.4	14.3	16.3
	28	0.59	1.28	2.08	2.99	4.03	5.20	6.49	7.90	9.42	11.1	12.8	14.6
	32	0.52	1.13	1.84	2.65	3.59	4.63	5.80	7.07	8.46	9.95	11.6	13.3
	36	0.46	1.01	1.65	2.38	3.23	4.17	5.23	6.40	7.67	9.04	10.5	12.1
6	2	2.64	5.38	8.22	11.1	14.1	17.0	20.0	23.0	25.9	28.9	31.9	34.8
	3	2.43	5.02	7.78	10.7	13.6	16.6	19.5	22.5	25.5	28.5	31.4	34.4
	4	2.23	4.67	7.33	10.2	13.1	16.0	19.0	22.0	25.0	28.0	31.0	33.9
	5	2.05	4.34	6.90	9.66	12.5	15.5	18.4	21.4	24.4	27.4	30.4	33.4
	6	1.89	4.06	6.50	9.19	12.0	14.9	17.9	20.9	23.9	26.9	29.9	32.9
	7	1.75	3.80	6.16	8.76	11.5	14.4	17.3	20.3	23.3	26.3	29.3	32.3
	8	1.63	3.57	5.84	8.36	11.1	13.9	16.8	19.7	22.7	25.7	28.7	31.7
	9	1.52	3.36	5.54	7.99	10.6	13.4	16.2	19.2	22.1	25.1	28.1	31.1
	10	1.42	3.17	5.27	7.63	10.2	12.9	15.7	18.6	21.5	24.5	27.5	30.5
	12	1.25	2.84	4.78	6.99	9.40	12.0	14.7	17.6	20.4	23.4	26.3	29.3
	14	1.11	2.57	4.36	6.42	8.70	11.2	13.8	16.6	19.4	22.3	25.2	28.2
	16	0.99	2.33	3.99	5.92	8.09	10.5	13.0	15.7	18.4	21.2	24.1	27.0
	18	0.90	2.13	3.68	5.49	7.54	9.80	12.2	14.8	17.5	20.3	23.1	26.0
	20	0.81	1.96	3.40	5.10	7.05	9.21	11.6	14.0	16.6	19.3	22.1	24.9
	24	0.68	1.68	2.95	4.46	6.22	8.19	10.4	12.7	15.1	17.7	20.3	23.0
	28	0.59	1.47	2.59	3.95	5.55	7.35	9.34	11.5	13.8	16.2	18.7	21.3
	32	0.52	1.31	2.31	3.54	4.99	6.65	8.49	10.5	12.7	14.9	17.3	19.8
	36	0.46	1.17	2.08	3.20	4.54	6.06	7.77	9.64	11.7	13.8	16.1	18.5

Table 7-11 (continued)
Coefficients C for Eccentrically Loaded Bolt Groups
Angle = 60°

Available strength of a bolt group, ϕR_n or R_n/Ω, is determined with

$$R_n = C \times r_n$$

or

LRFD	ASD
$C_{min} = \frac{P_u}{\phi r_n}$	$C_{min} = \frac{\Omega P_a}{r_n}$

where

P = required force, P_u or P_a, kips
r_n = nominal strength per bolt, kips
e = eccentricity of P with respect to centroid of bolt group, in. (not tabulated, may be determined by geometry)
e_x = horizontal component of e, in.
s = bolt spacing, in.
C = coefficient tabulated below

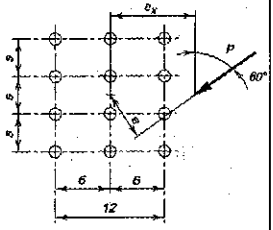

s, in.	e_x, in.	Number of Bolts in One Vertical Row, n											
		1	2	3	4	5	6	7	8	9	10	11	12
3	2	2.83	5.64	8.45	11.3	14.1	16.9	19.8	22.6	25.5	28.4	31.3	34.2
	3	2.72	5.43	8.13	10.8	13.6	16.3	19.1	21.9	24.8	27.6	30.5	33.4
	4	2.59	5.18	7.77	10.4	13.0	15.7	18.5	21.2	24.0	26.8	29.7	32.5
	5	2.46	4.92	7.40	9.92	12.5	15.1	17.8	20.5	23.2	26.0	28.9	31.7
	6	2.32	4.66	7.03	9.46	12.0	14.5	17.1	19.8	22.5	25.2	28.0	30.8
	7	2.19	4.41	6.68	9.02	11.4	13.9	16.5	19.1	21.8	24.5	27.2	30.0
	8	2.07	4.17	6.35	8.61	11.0	13.4	15.9	18.4	21.1	23.7	26.5	29.2
	9	1.95	3.95	6.04	8.22	10.5	12.9	15.3	17.8	20.4	23.0	25.7	28.5
	10	1.84	3.74	5.75	7.86	10.1	12.4	14.8	17.3	19.8	22.4	25.0	27.7
	12	1.65	3.38	5.22	7.19	9.28	11.5	13.8	16.2	18.6	21.1	23.7	26.3
	14	1.49	3.06	4.76	6.61	8.58	10.7	12.9	15.2	17.5	20.0	22.5	25.0
	16	1.35	2.79	4.37	6.09	7.95	9.93	12.0	14.2	16.5	18.9	21.3	23.8
	18	1.23	2.55	4.02	5.64	7.39	9.28	11.3	13.4	15.6	17.9	20.3	22.7
	20	1.12	2.35	3.72	5.24	6.90	8.69	10.6	12.6	14.8	17.0	19.3	21.7
	24	0.95	2.02	3.22	4.57	6.06	7.68	9.43	11.3	13.3	15.4	17.5	19.8
	28	0.83	1.76	2.84	4.04	5.39	6.86	8.47	10.2	12.0	14.0	16.0	18.1
	32	0.73	1.56	2.53	3.61	4.84	6.19	7.66	9.26	11.0	12.8	14.7	16.7
	36	0.65	1.40	2.27	3.26	4.38	5.62	6.98	8.46	10.1	11.7	13.5	15.4
6	2	2.83	5.64	8.47	11.3	14.2	17.1	20.0	23.0	25.9	28.9	31.8	34.8
	3	2.72	5.44	8.19	11.0	13.8	16.7	19.6	22.6	25.5	28.4	31.4	34.3
	4	2.59	5.21	7.88	10.6	13.4	16.3	19.2	22.1	25.0	28.0	30.9	33.9
	5	2.46	4.97	7.57	10.3	13.1	15.9	18.8	21.7	24.6	27.5	30.4	33.4
	6	2.32	4.73	7.27	9.91	12.7	15.5	18.3	21.2	24.1	27.0	30.0	32.9
	7	2.19	4.51	6.97	9.56	12.3	15.0	17.9	20.8	23.7	26.6	29.5	32.4
	8	2.07	4.29	6.69	9.23	11.9	14.6	17.5	20.3	23.2	26.1	29.0	32.0
	9	1.95	4.09	6.43	8.92	11.5	14.3	17.0	19.9	22.8	25.6	28.6	31.5
	10	1.84	3.90	6.18	8.63	11.2	13.9	16.6	19.5	22.3	25.2	28.1	31.0
	12	1.65	3.56	5.73	8.08	10.6	13.2	15.9	18.7	21.5	24.3	27.2	30.1
	14	1.49	3.27	5.32	7.59	10.0	12.6	15.2	17.9	20.7	23.5	26.3	29.2
	16	1.35	3.01	4.95	7.13	9.48	12.0	14.5	17.2	19.9	22.7	25.5	28.4
	18	1.23	2.78	4.63	6.71	8.98	11.4	13.9	16.5	19.2	22.0	24.7	27.6
	20	1.12	2.58	4.34	6.33	8.52	10.9	13.3	15.9	18.5	21.2	24.0	26.8
	24	0.95	2.25	3.84	5.67	7.70	9.91	12.3	14.7	17.3	19.9	22.6	25.3
	28	0.83	1.98	3.43	5.11	7.00	9.08	11.3	13.7	16.1	18.7	21.3	23.9
	32	0.73	1.77	3.09	4.64	6.40	8.36	10.5	12.7	15.1	17.5	20.1	22.6
	36	0.65	1.60	2.81	4.24	5.89	7.73	9.74	11.9	14.2	16.5	19.0	21.5

Table 7-11 (continued)
Coefficients C for Eccentrically Loaded Bolt Groups
Angle = 75°

Available strength of a bolt group, ϕR_n or R_n/Ω, is determined with

$$R_n = C \times r_n$$

or

LRFD	ASD
$C_{min} = \frac{P_u}{\phi r_n}$	$C_{min} = \frac{\Omega P_a}{r_n}$

where

P = required force, P_u or P_a, kips
r_n = nominal strength per bolt, kips
e = eccentricity of P with respect to centroid of bolt group, in. (not tabulated, may be determined by geometry)
e_x = horizontal component of e, in.
s = bolt spacing, in.
C = coefficient tabulated below

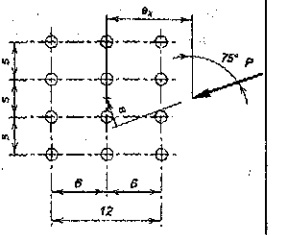

s, in.	e_x, in.	Number of Bolts in One Vertical Row, n											
		1	2	3	4	5	6	7	8	9	10	11	12
3	2	2.92	5.83	8.73	11.6	14.5	17.4	20.3	23.1	26.0	28.9	31.8	34.7
	3	2.89	5.77	8.63	11.5	14.3	17.2	20.0	22.8	25.7	28.5	31.4	34.2
	4	2.86	5.70	8.51	11.3	14.1	16.9	19.7	22.5	25.3	28.1	30.9	33.7
	5	2.82	5.61	8.38	11.1	13.9	16.6	19.4	22.1	24.9	27.7	30.5	33.3
	6	2.77	5.51	8.23	10.9	13.6	16.3	19.0	21.8	24.5	27.2	30.0	32.8
	7	2.72	5.40	8.06	10.7	13.4	16.0	18.7	21.4	24.1	26.8	29.6	32.3
	8	2.66	5.29	7.89	10.5	13.1	15.7	18.3	21.0	23.7	26.4	29.1	31.9
	9	2.60	5.16	7.71	10.3	12.8	15.4	18.0	20.6	23.3	26.0	28.7	31.4
	10	2.53	5.04	7.53	10.0	12.6	15.1	17.7	20.3	22.9	25.6	28.3	31.0
	12	2.40	4.78	7.16	9.57	12.0	14.5	17.0	19.6	22.1	24.8	27.4	30.1
	14	2.26	4.52	6.80	9.12	11.5	13.9	16.4	18.9	21.4	24.0	26.6	29.3
	16	2.13	4.27	6.45	8.68	11.0	13.3	15.8	18.2	20.7	23.3	25.9	28.5
	18	2.00	4.03	6.12	8.27	10.5	12.8	15.2	17.6	20.1	22.6	25.1	27.7
	20	1.89	3.81	5.80	7.88	10.1	12.3	14.6	17.0	19.4	21.9	24.4	27.0
	24	1.67	3.41	5.24	7.18	9.22	11.4	13.6	15.9	18.2	20.7	23.1	25.6
	28	1.49	3.06	4.75	6.56	8.49	10.5	12.6	14.9	17.1	19.5	21.9	24.3
	32	1.34	2.77	4.33	6.02	7.84	9.77	11.8	13.9	16.1	18.4	20.7	23.1
	36	1.21	2.52	3.97	5.56	7.27	9.10	11.1	13.1	15.2	17.4	19.7	22.0
6	2	2.92	5.82	8.71	11.6	14.5	17.4	20.3	23.5	26.4	29.3	32.3	35.2
	3	2.89	5.76	8.60	11.4	14.3	17.1	20.0	22.9	25.8	28.7	31.7	34.6
	4	2.86	5.68	8.47	11.3	14.1	16.9	19.8	22.6	25.5	28.4	31.3	34.2
	5	2.82	5.59	8.34	11.1	13.9	16.7	19.5	22.4	25.2	28.1	31.0	33.9
	6	2.77	5.49	8.19	10.9	13.7	16.4	19.2	22.1	24.9	27.8	30.7	33.6
	7	2.72	5.39	8.04	10.7	13.4	16.2	19.0	21.8	24.6	27.5	30.4	33.3
	8	2.66	5.27	7.89	10.5	13.2	16.0	18.8	21.6	24.4	27.2	30.1	33.0
	9	2.60	5.16	7.74	10.4	13.0	15.8	18.5	21.3	24.1	27.0	29.8	32.7
	10	2.53	5.04	7.58	10.2	12.8	15.5	18.3	21.0	23.9	26.7	29.5	32.4
	12	2.40	4.81	7.27	9.81	12.4	15.1	17.8	20.6	23.3	26.2	29.0	31.8
	14	2.26	4.57	6.97	9.47	12.0	14.7	17.4	20.1	22.9	25.6	28.4	31.3
	16	2.13	4.35	6.69	9.13	11.7	14.3	16.9	19.6	22.4	25.1	27.9	30.7
	18	2.00	4.13	6.41	8.82	11.3	13.9	16.5	19.2	21.9	24.7	27.4	30.2
	20	1.89	3.93	6.15	8.51	11.0	13.5	16.1	18.8	21.5	24.2	27.0	29.8
	24	1.67	3.57	5.67	7.95	10.4	12.9	15.4	18.0	20.7	23.4	26.1	28.8
	28	1.49	3.25	5.25	7.44	9.77	12.2	14.7	17.3	19.9	22.6	25.3	28.0
	32	1.34	2.97	4.87	6.98	9.23	11.6	14.1	16.6	19.2	21.8	24.5	27.2
	36	1.21	2.73	4.54	6.56	8.74	11.1	13.5	16.0	18.5	21.1	23.7	26.4

Table 7-12
Coefficients C for Eccentrically Loaded Bolt Groups
Angle = 0°

Available strength of a bolt group, ϕR_n or R_n/Ω, is determined with

$$R_n = C \times r_n$$

or

LRFD	ASD
$C_{min} = \frac{P_u}{\phi r_n}$	$C_{min} = \frac{\Omega P_a}{r_n}$

where

P = required force, P_u or P_a, kips
r_n = nominal strength per bolt, kips
e = eccentricity of P with respect to centroid of bolt group, in. (not tabulated, may be determined by geometry)
e_x = horizontal component of e, in.
s = bolt spacing, in.
C = coefficient tabulated below

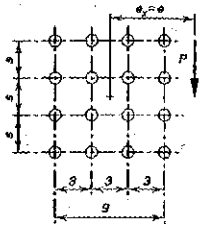

s, in.	e_x, in.	Number of Bolts in One Vertical Row, n											
		1	2	3	4	5	6	7	8	9	10	11	12
3	2	2.60	5.70	9.24	13.2	17.3	21.4	25.6	29.7	33.8	37.8	41.9	45.9
	3	2.23	4.92	8.05	11.7	15.6	19.7	23.9	28.1	32.3	36.4	40.6	44.7
	4	1.94	4.30	7.09	10.4	14.0	18.0	22.1	26.3	30.5	34.7	38.9	43.1
	5	1.69	3.79	6.30	9.29	12.6	16.4	20.3	24.4	28.6	32.9	37.1	41.4
	6	1.49	3.37	5.65	8.37	11.5	14.9	18.7	22.6	26.7	30.9	35.2	39.4
	7	1.32	3.03	5.10	7.59	10.4	13.7	17.2	21.0	24.9	29.0	33.2	37.5
	8	1.18	2.74	4.63	6.92	9.56	12.6	15.9	19.5	23.3	27.3	31.4	35.5
	9	1.07	2.50	4.24	6.35	8.81	11.6	14.7	18.1	21.7	25.6	29.6	33.7
	10	0.98	2.29	3.89	5.86	8.15	10.8	13.7	16.9	20.3	24.0	27.9	31.9
	12	0.83	1.96	3.34	5.06	7.06	9.37	12.0	14.8	17.9	21.3	24.9	28.6
	14	0.73	1.72	2.92	4.44	6.21	8.27	10.6	13.2	16.0	19.1	22.3	25.8
	16	0.65	1.52	2.59	3.95	5.54	7.39	9.48	11.8	14.4	17.2	20.2	23.4
	18	0.58	1.37	2.33	3.55	4.99	6.67	8.57	10.7	13.1	15.6	18.4	21.4
	20	0.53	1.24	2.11	3.23	4.53	6.07	7.81	9.77	11.9	14.3	16.9	19.6
	24	0.44	1.04	1.78	2.72	3.83	5.14	6.62	8.30	10.2	12.2	14.4	16.8
	28	0.38	0.90	1.54	2.35	3.31	4.45	5.73	7.20	8.82	10.6	12.6	14.7
	32	0.34	0.79	1.36	2.07	2.91	3.92	5.05	6.35	7.79	9.38	11.1	13.0
	36	0.30	0.71	1.21	1.85	2.60	3.50	4.51	5.68	6.96	8.39	9.95	11.6
	C′, in.	11.3	26.0	44.7	68.1	96.0	129	167	210	258	312	371	435
6	2	2.60	6.48	10.7	14.8	18.9	23.0	27.0	31.0	34.9	38.9	42.9	46.8
	3	2.23	5.75	9.79	14.0	18.2	22.3	26.4	30.5	34.5	38.5	42.5	46.5
	4	1.94	5.12	8.91	13.1	17.4	21.6	25.7	29.9	33.9	38.0	42.0	46.1
	5	1.69	4.58	8.10	12.2	16.4	20.7	24.9	29.1	33.2	37.4	41.4	45.5
	6	1.49	4.13	7.37	11.3	15.5	19.7	24.0	28.3	32.5	36.6	40.8	44.9
	7	1.32	3.74	6.74	10.5	14.5	18.8	23.1	27.3	31.6	35.8	40.0	44.1
	8	1.18	3.41	6.20	9.73	13.6	17.8	22.1	26.4	30.6	34.9	39.1	43.3
	9	1.07	3.13	5.73	9.05	12.8	16.9	21.1	25.4	29.7	34.0	38.2	42.5
	10	0.98	2.89	5.31	8.45	12.0	16.0	20.1	24.4	28.7	33.0	37.3	41.5
	12	0.83	2.50	4.63	7.43	10.7	14.3	18.3	22.4	26.7	31.0	35.3	39.6
	14	0.73	2.19	4.09	6.60	9.53	12.9	16.7	20.6	24.7	29.0	33.3	37.6
	16	0.65	1.95	3.65	5.93	8.59	11.7	15.2	19.0	22.9	27.1	31.3	35.5
	18	0.58	1.76	3.29	5.37	7.81	10.7	14.0	17.5	21.3	25.3	29.4	33.6
	20	0.53	1.60	2.99	4.90	7.15	9.85	12.9	16.2	19.8	23.6	27.6	31.7
	24	0.44	1.35	2.53	4.16	6.10	8.44	11.1	14.0	17.3	20.8	24.4	28.3
	28	0.38	1.17	2.19	3.61	5.31	7.37	9.69	12.3	15.2	18.4	21.8	25.3
	32	0.34	1.03	1.93	3.19	4.69	6.53	8.61	11.0	13.6	16.5	19.6	22.9
	36	0.30	0.92	1.72	2.85	4.20	5.85	7.73	9.89	12.3	14.9	17.7	20.8
	C′, in.	11.3	33.7	63.7	106	156	219	291	375	469	574	690	817

Table 7-12 (continued)
Coefficients C for Eccentrically Loaded Bolt Groups
Angle = 15°

Available strength of a bolt group, ϕR_n or R_n/Ω, is determined with

$$R_n = C \times r_n$$

or

LRFD	ASD
$C_{min} = \frac{P_u}{\phi r_n}$	$C_{min} = \frac{\Omega P_a}{r_n}$

where

P = required force, P_u or P_a, kips
r_n = nominal strength per bolt, kips
e = eccentricity of P with respect to centroid of bolt group, in. (not tabulated, may be determined by geometry)
e_x = horizontal component of e, in.
s = bolt spacing, in.
C = coefficient tabulated below

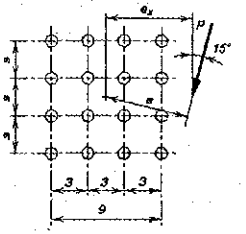

s, in.	e_x, in.	Number of Bolts in One Vertical Row, n											
		1	2	3	4	5	6	7	8	9	10	11	12
3	2	2.68	5.77	9.31	13.2	17.2	21.3	25.4	29.5	33.6	37.6	41.7	45.7
	3	2.30	5.00	8.17	11.7	15.6	19.6	23.7	27.8	32.0	36.1	40.2	44.3
	4	1.99	4.38	7.22	10.4	14.1	17.9	21.9	26.0	30.2	34.4	38.5	42.7
	5	1.74	3.88	6.43	9.37	12.7	16.4	20.2	24.2	28.3	32.5	36.7	40.9
	6	1.53	3.45	5.77	8.47	11.6	15.0	18.6	22.5	26.5	30.6	34.8	39.0
	7	1.36	3.10	5.21	7.71	10.6	13.7	17.2	20.9	24.8	28.8	32.9	37.1
	8	1.22	2.81	4.74	7.05	9.70	12.7	15.9	19.5	23.2	27.1	31.1	35.2
	9	1.11	2.57	4.34	6.48	8.95	11.7	14.8	18.1	21.7	25.5	29.4	33.4
	10	1.01	2.36	4.00	5.98	8.29	10.9	13.8	17.0	20.4	24.0	27.7	31.6
	12	0.86	2.02	3.44	5.18	7.21	9.52	12.1	15.0	18.1	21.4	24.9	28.5
	14	0.75	1.77	3.01	4.55	6.36	8.43	10.8	13.3	16.1	19.2	22.4	25.8
	16	0.67	1.57	2.68	4.05	5.67	7.54	9.66	12.0	14.6	17.3	20.3	23.5
	18	0.60	1.41	2.40	3.65	5.12	6.81	8.74	10.9	13.3	15.8	18.6	21.5
	20	0.54	1.28	2.18	3.32	4.66	6.21	7.98	9.95	12.1	14.5	17.1	19.8
	24	0.46	1.08	1.84	2.80	3.94	5.26	6.78	8.47	10.4	12.4	14.6	17.0
	28	0.40	0.93	1.59	2.43	3.41	4.56	5.89	7.37	9.02	10.8	12.8	14.9
	32	0.35	0.82	1.40	2.14	3.00	4.03	5.19	6.51	7.98	9.59	11.3	13.2
	36	0.31	0.73	1.25	1.91	2.68	3.60	4.65	5.83	7.15	8.59	10.2	11.9
6	2	2.68	6.48	10.6	14.7	18.8	22.9	26.9	30.9	34.8	38.8	42.8	46.7
	3	2.30	5.75	9.75	13.9	18.1	22.2	26.3	30.3	34.3	38.3	42.3	46.3
	4	1.99	5.13	8.91	13.0	17.2	21.4	25.5	29.6	33.7	37.7	41.8	45.8
	5	1.74	4.61	8.14	12.1	16.3	20.5	24.7	28.8	33.0	37.1	41.1	45.2
	6	1.53	4.17	7.45	11.2	15.3	19.5	23.7	27.9	32.1	36.3	40.4	44.5
	7	1.36	3.79	6.84	10.4	14.4	18.6	22.8	27.0	31.2	35.4	39.6	43.7
	8	1.22	3.46	6.30	9.71	13.6	17.6	21.8	26.0	30.3	34.5	38.7	42.9
	9	1.11	3.19	5.83	9.05	12.8	16.7	20.9	25.1	29.3	33.5	37.8	42.0
	10	1.01	2.94	5.42	8.47	12.0	15.9	19.9	24.1	28.3	32.6	36.8	41.0
	12	0.86	2.55	4.73	7.47	10.7	14.3	18.2	22.2	26.4	30.6	34.8	39.1
	14	0.75	2.24	4.18	6.66	9.62	12.9	16.6	20.5	24.5	28.6	32.8	37.1
	16	0.67	2.00	3.74	6.00	8.71	11.8	15.2	18.9	22.8	26.8	30.9	35.1
	18	0.60	1.80	3.38	5.45	7.94	10.8	14.0	17.5	21.2	25.1	29.1	33.2
	20	0.54	1.64	3.08	4.98	7.28	9.92	13.0	16.2	19.8	23.5	27.4	31.4
	24	0.46	1.39	2.60	4.25	6.23	8.54	11.2	14.1	17.3	20.8	24.4	28.1
	28	0.40	1.20	2.26	3.69	5.43	7.48	9.85	12.5	15.4	18.5	21.8	25.3
	32	0.35	1.06	1.99	3.26	4.81	6.65	8.77	11.1	13.8	16.6	19.7	22.9
	36	0.31	0.94	1.78	2.92	4.31	5.97	7.89	10.0	12.5	15.1	17.9	20.9

Table 7-12 (continued)
Coefficients C for Eccentrically Loaded Bolt Groups
Angle = 30°

Available strength of a bolt group, ϕR_n or R_n/Ω, is determined with

$$R_n = C \times r_n$$

or

LRFD	ASD
$C_{min} = \frac{P_u}{\phi r_n}$	$C_{min} = \frac{\Omega P_a}{r_n}$

where

P = required force, P_u or P_a, kips
r_n = nominal strength per bolt, kips
e = eccentricity of P with respect to centroid of bolt group, in. (not tabulated, may be determined by geometry)
e_x = horizontal component of e, in.
s = bolt spacing, in.
C = coefficient tabulated below

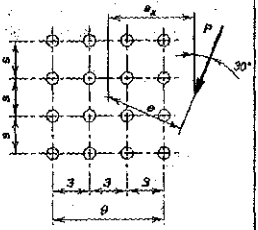

s, in.	e_x, in.	Number of Bolts in One Vertical Row, n											
		1	2	3	4	5	6	7	8	9	10	11	12
3	2	2.90	6.06	9.59	13.4	17.3	21.3	25.3	29.4	33.4	37.4	41.4	45.4
	3	2.50	5.31	8.52	12.1	15.8	19.7	23.7	27.8	31.8	35.9	40.0	44.0
	4	2.18	4.70	7.62	10.9	14.4	18.2	22.1	26.1	30.1	34.2	38.3	42.4
	5	1.91	4.18	6.85	9.86	13.2	16.8	20.5	24.4	28.4	32.5	36.6	40.7
	6	1.69	3.75	6.19	8.98	12.1	15.5	19.1	22.9	26.8	30.7	34.8	38.9
	7	1.51	3.38	5.63	8.21	11.1	14.3	17.8	21.4	25.2	29.1	33.1	37.1
	8	1.36	3.07	5.14	7.55	10.3	13.3	16.6	20.0	23.7	27.5	31.4	35.4
	9	1.23	2.81	4.73	6.97	9.54	12.4	15.5	18.8	22.3	26.0	29.8	33.7
	10	1.13	2.59	4.37	6.46	8.88	11.6	14.5	17.7	21.1	24.7	28.3	32.2
	12	0.96	2.23	3.78	5.62	7.78	10.2	12.9	15.8	18.9	22.2	25.7	29.3
	14	0.84	1.95	3.32	4.96	6.90	9.08	11.5	14.2	17.1	20.1	23.4	26.8
	16	0.74	1.73	2.96	4.43	6.19	8.17	10.4	12.9	15.5	18.4	21.4	24.6
	18	0.67	1.56	2.66	4.00	5.60	7.41	9.46	11.7	14.2	16.8	19.7	22.7
	20	0.61	1.42	2.42	3.65	5.11	6.77	8.67	10.8	13.1	15.5	18.2	21.0
	24	0.51	1.20	2.04	3.09	4.34	5.77	7.41	9.22	11.2	13.4	15.7	18.2
	28	0.44	1.03	1.77	2.68	3.77	5.01	6.46	8.05	9.83	11.8	13.9	16.1
	32	0.39	0.91	1.56	2.36	3.32	4.43	5.71	7.14	8.72	10.5	12.3	14.4
	36	0.35	0.81	1.39	2.11	2.97	3.97	5.12	6.40	7.84	9.41	11.1	13.0
6	2	2.90	6.59	10.6	14.7	18.7	22.7	26.7	30.7	34.7	38.7	42.6	46.6
	3	2.50	5.88	9.83	13.9	18.0	22.0	26.1	30.1	34.1	38.1	42.1	46.1
	4	2.18	5.30	9.05	13.0	17.1	21.2	25.3	29.4	33.5	37.5	41.5	45.5
	5	1.91	4.81	8.35	12.2	16.3	20.4	24.5	28.6	32.7	36.8	40.8	44.9
	6	1.69	4.38	7.72	11.4	15.4	19.5	23.6	27.7	31.8	35.9	40.0	44.1
	7	1.51	4.01	7.15	10.7	14.6	18.6	22.7	26.8	31.0	35.1	39.2	43.3
	8	1.36	3.69	6.64	10.0	13.8	17.7	21.8	25.9	30.0	34.2	38.3	42.4
	9	1.23	3.41	6.19	9.41	13.0	16.9	20.9	25.0	29.1	33.3	37.4	41.6
	10	1.13	3.16	5.79	8.85	12.4	16.1	20.1	24.1	28.2	32.4	36.5	40.6
	12	0.96	2.76	5.09	7.88	11.1	14.7	18.5	22.4	26.4	30.5	34.6	38.8
	14	0.84	2.44	4.54	7.08	10.1	13.4	17.0	20.8	24.7	28.8	32.8	36.9
	16	0.74	2.18	4.08	6.41	9.21	12.3	15.7	19.4	23.2	27.1	31.1	35.1
	18	0.67	1.97	3.70	5.85	8.45	11.4	14.6	18.1	21.7	25.5	29.4	33.4
	20	0.61	1.80	3.38	5.37	7.80	10.5	13.6	16.9	20.4	24.1	27.9	31.8
	24	0.51	1.53	2.87	4.61	6.74	9.16	11.9	14.9	18.1	21.5	25.1	28.8
	28	0.44	1.32	2.49	4.02	5.91	8.07	10.5	13.3	16.2	19.4	22.7	26.2
	32	0.39	1.17	2.20	3.57	5.26	7.20	9.45	11.9	14.6	17.6	20.7	23.9
	36	0.35	1.05	1.97	3.21	4.73	6.49	8.55	10.8	13.3	16.0	18.9	22.0

Table 7-12 (continued)
Coefficients C for Eccentrically Loaded Bolt Groups
Angle = 45°

Available strength of a bolt group, ϕR_n or R_n/Ω, is determined with

$$R_n = C \times r_n$$

or

LRFD	ASD
$C_{min} = \frac{P_u}{\phi r_n}$	$C_{min} = \frac{\Omega P_a}{r_n}$

where

P_u = required force, P_u or P_a, kips
r_n = nominal strength per bolt, kips
e = eccentricity of P with respect to centroid of bolt group, in. (not tabulated, may be determined by geometry)
e_x = horizontal component of e, in.
s = bolt spacing, in.
C = coefficient tabulated below

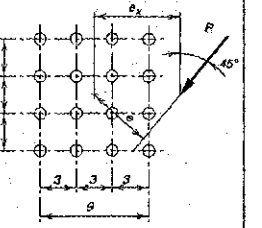

s, in.	e_x, in.	Number of Bolts in One Vertical Row, n											
		1	2	3	4	5	6	7	8	9	10	11	12
3	2	3.26	6.62	10.2	13.9	17.7	21.5	25.5	29.4	33.4	37.3	41.3	45.3
	3	2.87	5.92	9.19	12.7	16.4	20.2	24.0	28.0	31.9	35.9	39.9	43.9
	4	2.54	5.31	8.36	11.7	15.2	18.8	22.6	26.5	30.4	34.4	38.4	42.4
	5	2.25	4.78	7.63	10.8	14.1	17.6	21.3	25.1	29.0	32.9	36.8	40.8
	6	2.01	4.33	6.99	9.94	13.1	16.5	20.1	23.8	27.5	31.4	35.3	39.3
	7	1.81	3.93	6.42	9.20	12.2	15.5	18.9	22.5	26.2	30.0	33.8	37.7
	8	1.64	3.60	5.92	8.55	11.4	14.6	17.9	21.3	24.9	28.6	32.4	36.3
	9	1.49	3.31	5.49	7.96	10.7	13.7	16.9	20.3	23.8	27.4	31.1	34.9
	10	1.37	3.06	5.10	7.44	10.1	12.9	16.0	19.2	22.7	26.2	29.8	33.6
	12	1.17	2.65	4.46	6.55	8.93	11.6	14.4	17.5	20.7	24.0	27.5	31.1
	14	1.03	2.33	3.95	5.83	8.00	10.4	13.1	15.9	18.9	22.1	25.4	28.8
	16	0.91	2.08	3.54	5.24	7.23	9.47	11.9	14.6	17.4	20.4	23.6	26.8
	18	0.82	1.88	3.20	4.75	6.59	8.66	10.9	13.4	16.1	18.9	21.9	25.0
	20	0.74	1.71	2.92	4.35	6.04	7.96	10.1	12.4	15.0	17.6	20.5	23.5
	24	0.63	1.45	2.48	3.71	5.18	6.84	8.71	10.8	13.0	15.4	18.0	20.7
	28	0.54	1.26	2.15	3.23	4.52	5.99	7.65	9.50	11.5	13.7	16.0	18.5
	32	0.48	1.11	1.90	2.86	4.00	5.31	6.81	8.48	10.3	12.3	14.4	16.7
	36	0.43	0.99	1.69	2.56	3.59	4.77	6.13	7.64	9.30	11.1	13.1	15.2
6	2	3.26	6.89	10.8	14.7	18.7	22.7	26.6	30.6	34.6	38.5	42.5	46.5
	3	2.87	6.28	10.1	14.0	18.0	22.0	26.0	30.0	33.9	37.9	41.9	45.9
	4	2.54	5.74	9.38	13.3	17.2	21.2	25.2	29.2	33.2	37.2	41.2	45.2
	5	2.25	5.27	8.75	12.6	16.5	20.4	24.5	28.5	32.5	36.5	40.5	44.5
	6	2.01	4.85	8.20	11.9	15.7	19.7	23.7	27.7	31.7	35.7	39.7	43.8
	7	1.81	4.49	7.70	11.3	15.0	18.9	22.9	26.9	30.9	34.9	39.0	43.0
	8	1.64	4.16	7.25	10.7	14.4	18.2	22.1	26.1	30.1	34.1	38.2	42.2
	9	1.49	3.87	6.83	10.2	13.7	17.5	21.4	25.3	29.3	33.3	37.4	41.4
	10	1.37	3.62	6.45	9.65	13.1	16.8	20.7	24.6	28.5	32.5	36.6	40.6
	12	1.17	3.19	5.78	8.75	12.0	15.6	19.3	23.1	27.0	31.0	35.0	39.0
	14	1.03	2.84	5.21	7.97	11.1	14.5	18.1	21.8	25.6	29.5	33.4	37.4
	16	0.91	2.56	4.74	7.30	10.2	13.5	16.9	20.5	24.3	28.1	32.0	35.9
	18	0.82	2.33	4.33	6.72	9.48	12.6	15.9	19.4	23.0	26.7	30.6	34.4
	20	0.74	2.13	3.98	6.21	8.83	11.8	15.0	18.3	21.8	25.5	29.2	33.1
	24	0.63	1.82	3.42	5.38	7.74	10.4	13.3	16.5	19.8	23.2	26.8	30.5
	28	0.54	1.59	2.99	4.74	6.87	9.30	12.0	14.9	18.0	21.3	24.7	28.2
	32	0.48	1.41	2.65	4.22	6.17	8.38	10.8	13.6	16.5	19.5	22.8	26.1
	36	0.43	1.26	2.38	3.81	5.59	7.62	9.89	12.4	15.2	18.0	21.1	24.3

Table 7-12 (continued)
Coefficients C for Eccentrically Loaded Bolt Groups
Angle = 60°

Available strength of a bolt group, ϕR_n or R_n/Ω, is determined with

$$R_n = C \times r_n$$

or

LRFD	ASD
$C_{min} = \frac{P_u}{\phi r_n}$	$C_{min} = \frac{\Omega P_a}{r_n}$

where

P = required force, P_u or P_a, kips
r_n = nominal strength per bolt, kips
e = eccentricity of P with respect to centroid of bolt group, in. (not tabulated, may be determined by geometry)
e_x = horizontal component of e, in.
s = bolt spacing, in.
C = coefficient tabulated below

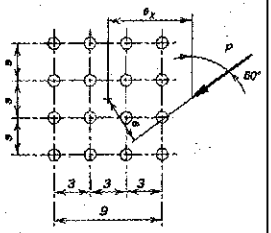

s, in.	e_x, in.	Number of Bolts in One Vertical Row, n											
		1	2	3	4	5	6	7	8	9	10	11	12
3	2	3.63	7.25	10.9	14.6	18.3	22.1	25.9	29.7	33.6	37.5	41.4	45.3
	3	3.38	6.77	10.2	13.8	17.4	21.1	24.8	28.6	32.4	36.3	40.2	44.1
	4	3.10	6.27	9.55	13.0	16.5	20.1	23.7	27.5	31.3	35.1	38.9	42.8
	5	2.84	5.80	8.92	12.2	15.6	19.1	22.7	26.4	30.1	33.9	37.8	41.6
	6	2.60	5.36	8.33	11.5	14.8	18.2	21.7	25.4	29.1	32.8	36.6	40.4
	7	2.38	4.96	7.79	10.8	14.1	17.4	20.9	24.4	28.0	31.7	35.5	39.3
	8	2.19	4.60	7.30	10.2	13.4	16.6	20.0	23.5	27.1	30.7	34.4	38.2
	9	2.02	4.28	6.85	9.68	12.7	15.9	19.2	22.6	26.1	29.7	33.4	37.1
	10	1.87	3.99	6.45	9.17	12.1	15.2	18.4	21.8	25.3	28.8	32.4	36.1
	12	1.62	3.51	5.75	8.27	11.0	13.9	17.0	20.3	23.6	27.0	30.6	34.1
	14	1.43	3.12	5.18	7.50	10.1	12.8	15.8	18.9	22.1	25.4	28.9	32.4
	16	1.27	2.81	4.70	6.85	9.23	11.9	14.7	17.6	20.7	24.0	27.3	30.7
	18	1.15	2.56	4.29	6.28	8.52	11.0	13.7	16.5	19.5	22.6	25.8	29.1
	20	1.04	2.34	3.95	5.80	7.89	10.2	12.8	15.5	18.4	21.4	24.5	27.7
	24	0.88	2.00	3.39	5.01	6.87	8.98	11.3	13.8	16.4	19.2	22.1	25.2
	28	0.76	1.74	2.96	4.39	6.07	7.97	10.1	12.3	14.8	17.4	20.1	23.0
	32	0.67	1.54	2.63	3.91	5.43	7.15	9.06	11.2	13.4	15.8	18.4	21.1
	36	0.60	1.38	2.36	3.52	4.91	6.48	8.22	10.2	12.3	14.5	16.9	19.4
6	2	3.63	7.29	11.1	14.9	18.8	22.7	26.6	30.5	34.5	38.4	42.4	46.3
	3	3.38	6.88	10.6	14.3	18.2	22.1	26.0	29.9	33.9	37.8	41.8	45.7
	4	3.10	6.46	10.0	13.8	17.6	21.5	25.4	29.3	33.2	37.2	41.1	45.1
	5	2.84	6.06	9.55	13.2	17.0	20.9	24.7	28.7	32.6	36.5	40.4	44.4
	6	2.60	5.69	9.09	12.7	16.4	20.3	24.1	28.0	31.9	35.9	39.8	43.8
	7	2.38	5.34	8.66	12.2	15.9	19.7	23.5	27.4	31.3	35.2	39.2	43.1
	8	2.19	5.03	8.27	11.7	15.4	19.1	22.9	26.8	30.7	34.6	38.5	42.4
	9	2.02	4.74	7.90	11.3	14.9	18.6	22.4	26.2	30.1	34.0	37.9	41.8
	10	1.87	4.47	7.55	10.9	14.4	18.1	21.8	25.6	29.5	33.4	37.3	41.2
	12	1.62	4.01	6.93	10.1	13.6	17.1	20.8	24.5	28.3	32.2	36.0	39.9
	14	1.43	3.63	6.38	9.46	12.8	16.2	19.8	23.5	27.3	31.0	34.9	38.7
	16	1.27	3.31	5.91	8.84	12.0	15.4	18.9	22.5	26.2	30.0	33.8	37.6
	18	1.15	3.04	5.49	8.28	11.3	14.6	18.0	21.6	25.2	28.9	32.7	36.5
	20	1.04	2.81	5.12	7.77	10.7	13.9	17.2	20.7	24.3	28.0	31.7	35.4
	24	0.88	2.44	4.49	6.90	9.62	12.6	15.8	19.1	22.6	26.1	29.8	33.4
	28	0.76	2.15	3.99	6.18	8.70	11.5	14.5	17.7	21.1	24.5	28.0	31.6
	32	0.67	1.91	3.58	5.58	7.93	10.6	13.4	16.5	19.7	23.0	26.4	29.9
	36	0.60	1.73	3.24	5.08	7.27	9.76	12.5	15.4	18.4	21.6	24.9	28.3

Table 7-12 (continued)
Coefficients *C* for Eccentrically Loaded Bolt Groups
Angle = 75°

Available strength of a bolt group, ϕR_n or R_n/Ω, is determined with

$$R_n = C \times r_n$$

or

LRFD	ASD
$C_{min} = \dfrac{P_u}{\phi r_n}$	$C_{min} = \dfrac{\Omega P_a}{r_n}$

where

P = required force, P_u or P_a, kips
r_n = nominal strength per bolt, kips
e = eccentricity of P with respect to centroid of bolt group, in. (not tabulated, may be determined by geometry)
e_x = horizontal component of e, in.
s = bolt spacing, in.
C = coefficient tabulated below

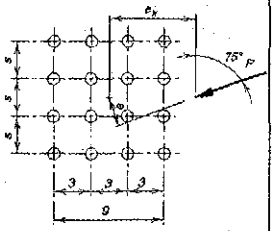

s, in.	e_x, in.	Number of Bolts in One Vertical Row, *n*											
		1	2	3	4	5	6	7	8	9	10	11	12
3	2	3.86	7.69	11.5	15.3	19.1	22.9	26.7	30.5	34.3	38.2	42.0	45.9
	3	3.79	7.53	11.2	14.9	18.6	22.4	26.1	29.9	33.6	37.4	41.3	45.1
	4	3.70	7.34	11.0	14.6	18.2	21.8	25.5	29.2	33.0	36.7	40.5	44.3
	5	3.59	7.13	10.6	14.2	17.7	21.3	24.9	28.6	32.3	36.1	39.8	43.6
	6	3.47	6.89	10.3	13.8	17.2	20.8	24.4	28.0	31.7	35.4	39.1	42.9
	7	3.34	6.65	9.98	13.4	16.8	20.3	23.8	27.4	31.1	34.7	38.4	42.2
	8	3.20	6.40	9.64	12.9	16.3	19.8	23.3	26.8	30.4	34.1	37.8	41.5
	9	3.07	6.16	9.31	12.6	15.9	19.3	22.8	26.3	29.9	33.5	37.1	40.8
	10	2.94	5.91	8.98	12.2	15.4	18.8	22.2	25.7	29.3	32.9	36.5	40.2
	12	2.68	5.45	8.36	11.4	14.6	17.9	21.3	24.7	28.2	31.8	35.4	39.0
	14	2.45	5.03	7.79	10.7	13.8	17.1	20.4	23.8	27.2	30.7	34.3	37.9
	16	2.24	4.65	7.28	10.1	13.1	16.3	19.5	22.9	26.3	29.7	33.2	36.8
	18	2.06	4.31	6.81	9.55	12.5	15.5	18.7	22.0	25.4	28.8	32.2	35.8
	20	1.90	4.01	6.40	9.03	11.9	14.8	18.0	21.2	24.5	27.9	31.3	34.8
	24	1.63	3.51	5.69	8.13	10.8	13.6	16.6	19.7	22.8	26.1	29.5	32.9
	28	1.43	3.11	5.11	7.36	9.83	12.5	15.3	18.3	21.4	24.6	27.8	31.1
	32	1.27	2.79	4.62	6.71	9.02	11.5	14.2	17.1	20.0	23.1	26.3	29.5
	36	1.14	2.53	4.22	6.15	8.31	10.7	13.3	16.0	18.8	21.8	24.9	28.0
6	2	3.86	7.67	11.5	15.3	19.1	23.0	26.9	30.8	35.2	39.1	43.0	47.0
	3	3.79	7.51	11.2	15.0	18.8	22.6	26.4	30.3	34.2	38.1	42.1	46.0
	4	3.70	7.32	11.0	14.7	18.4	22.2	26.0	29.9	33.8	37.7	41.6	45.5
	5	3.59	7.12	10.7	14.4	18.1	21.8	25.6	29.5	33.3	37.2	41.1	45.0
	6	3.47	6.92	10.4	14.1	17.7	21.5	25.3	29.1	32.9	36.8	40.7	44.6
	7	3.34	6.70	10.2	13.8	17.4	21.1	24.9	28.7	32.5	36.4	40.2	44.1
	8	3.20	6.49	9.92	13.5	17.1	20.8	24.5	28.3	32.1	36.0	39.8	43.7
	9	3.07	6.28	9.66	13.2	16.8	20.5	24.2	28.0	31.8	35.6	39.4	43.3
	10	2.94	6.08	9.42	12.9	16.5	20.2	23.9	27.6	31.4	35.2	39.0	42.9
	12	2.68	5.69	8.95	12.4	15.9	19.5	23.2	26.9	30.7	34.5	38.3	42.1
	14	2.45	5.33	8.51	11.9	15.4	19.0	22.6	26.3	30.0	33.8	37.6	41.4
	16	2.24	4.99	8.10	11.4	14.9	18.4	22.0	25.7	29.4	33.1	36.9	40.7
	18	2.06	4.69	7.72	11.0	14.4	17.9	21.5	25.1	28.8	32.5	36.2	40.0
	20	1.90	4.42	7.36	10.6	13.9	17.4	21.0	24.6	28.2	31.9	35.6	39.3
	24	1.63	3.95	6.74	9.83	13.1	16.5	20.0	23.5	27.1	30.7	34.4	38.1
	28	1.43	3.57	6.21	9.16	12.3	15.6	19.0	22.5	26.1	29.7	33.3	36.9
	32	1.27	3.25	5.74	8.56	11.6	14.8	18.2	21.6	25.1	28.6	32.2	35.9
	36	1.14	2.98	5.33	8.02	11.0	14.1	17.3	20.7	24.1	27.6	31.2	34.8

Table 7-13
Coefficients C for Eccentrically Loaded Bolt Groups
Angle = 0°

Available strength of a bolt group, ϕR_n or R_n/Ω, is determined with

$$R_n = C \times r_n$$

or

LRFD	ASD
$C_{min} = \frac{P_u}{\phi r_n}$	$C_{min} = \frac{\Omega P_a}{r_n}$

where

P = required force, P_u or P_a, kips
r_n = nominal strength per bolt, kips
e = eccentricity of P with respect to centroid of bolt group, in. (not tabulated, may be determined by geometry)
e_x = horizontal component of e, in.
s = bolt spacing, in.
C = coefficient tabulated below

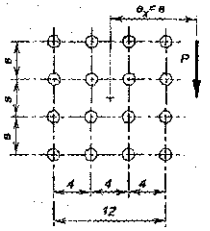

s, in.	e_x, in.	Number of Bolts in One Vertical Row, n											
		1	2	3	4	5	6	7	8	9	10	11	12
3	2	2.82	5.98	9.46	13.3	17.3	21.3	25.5	29.6	33.7	37.7	41.8	45.8
	3	2.50	5.31	8.43	12.0	15.7	19.7	23.8	28.0	32.2	36.3	40.4	44.6
	4	2.23	4.74	7.58	10.8	14.3	18.2	22.2	26.3	30.4	34.6	38.8	43.0
	5	2.01	4.27	6.86	9.82	13.1	16.7	20.5	24.5	28.6	32.8	37.0	41.3
	6	1.81	3.86	6.24	8.96	12.0	15.4	19.0	22.9	26.9	31.0	35.2	39.4
	7	1.64	3.52	5.70	8.22	11.1	14.2	17.6	21.3	25.2	29.2	33.3	37.5
	8	1.49	3.22	5.24	7.57	10.2	13.2	16.4	19.9	23.6	27.5	31.5	35.6
	9	1.36	2.96	4.83	7.01	9.48	12.3	15.3	18.6	22.1	25.9	29.8	33.8
	10	1.25	2.73	4.47	6.51	8.83	11.4	14.3	17.5	20.8	24.4	28.2	32.1
	12	1.07	2.37	3.89	5.68	7.74	10.1	12.6	15.5	18.5	21.8	25.3	29.0
	14	0.94	2.08	3.42	5.02	6.86	8.95	11.3	13.8	16.6	19.6	22.8	26.2
	16	0.83	1.86	3.05	4.49	6.15	8.04	10.2	12.5	15.0	17.8	20.7	23.9
	18	0.75	1.67	2.75	4.06	5.56	7.29	9.22	11.4	13.7	16.3	19.0	21.9
	20	0.68	1.52	2.50	3.70	5.07	6.65	8.43	10.4	12.6	14.9	17.5	20.2
	24	0.58	1.29	2.12	3.14	4.30	5.66	7.18	8.88	10.8	12.8	15.0	17.4
	28	0.50	1.12	1.84	2.72	3.73	4.92	6.24	7.73	9.37	11.2	13.1	15.2
	32	0.44	0.98	1.62	2.40	3.30	4.34	5.51	6.84	8.29	9.90	11.6	13.5
	36	0.40	0.88	1.45	2.15	2.95	3.89	4.94	6.13	7.43	8.88	10.4	12.1
	C', in.	15.0	32.8	54.2	79.9	110	145	184	229	279	333	393	458
6	2	2.82	6.54	10.6	14.8	18.9	22.9	26.9	30.9	34.9	38.9	42.8	46.8
	3	2.50	5.90	9.81	14.0	18.1	22.3	26.4	30.4	34.5	38.5	42.5	46.5
	4	2.23	5.33	9.01	13.1	17.3	21.5	25.7	29.8	33.9	37.9	42.0	46.0
	5	2.01	4.84	8.27	12.2	16.4	20.6	24.8	29.0	33.2	37.3	41.4	45.5
	6	1.81	4.42	7.60	11.4	15.5	19.7	24.0	28.2	32.4	36.6	40.7	44.8
	7	1.64	4.05	7.02	10.6	14.6	18.8	23.0	27.3	31.5	35.7	39.9	44.1
	8	1.49	3.73	6.51	9.94	13.7	17.8	22.0	26.3	30.6	34.8	39.1	43.3
	9	1.36	3.45	6.06	9.30	13.0	16.9	21.1	25.3	29.6	33.9	38.2	42.4
	10	1.25	3.20	5.66	8.72	12.2	16.1	20.2	24.4	28.6	32.9	37.2	41.5
	12	1.07	2.80	4.98	7.73	10.9	14.5	18.4	22.5	26.7	30.9	35.2	39.5
	14	0.94	2.47	4.43	6.92	9.81	13.2	16.8	20.7	24.8	29.0	33.2	37.5
	16	0.83	2.21	3.98	6.25	8.90	12.0	15.4	19.1	23.0	27.1	31.3	35.5
	18	0.75	2.00	3.60	5.68	8.13	11.0	14.2	17.7	21.4	25.3	29.4	33.6
	20	0.68	1.82	3.29	5.21	7.47	10.1	13.1	16.4	20.0	23.7	27.7	31.7
	24	0.58	1.55	2.79	4.45	6.40	8.72	11.3	14.3	17.5	20.9	24.5	28.3
	28	0.50	1.34	2.42	3.87	5.59	7.64	9.96	12.6	15.5	18.6	21.9	25.5
	32	0.44	1.18	2.14	3.43	4.95	6.79	8.87	11.2	13.8	16.7	19.7	23.0
	36	0.40	1.06	1.92	3.07	4.44	6.10	7.98	10.1	12.5	15.1	17.9	20.9
	C', in.	15.0	39.4	71.8	115	167	230	304	388	483	588	705	832

Table 7-13 (continued)
Coefficients C for Eccentrically Loaded Bolt Groups
Angle = 15°

Available strength of a bolt group, ϕR_n or R_n/Ω, is determined with

$$R_n = C \times r_n$$

or

LRFD	ASD
$C_{min} = \frac{P_u}{\phi r_n}$	$C_{min} = \frac{\Omega P_a}{r_n}$

where

P = required force, P_u or P_a, kips
r_n = nominal strength per bolt, kips
e = eccentricity of P with respect to centroid of bolt group, in. (not tabulated, may be determined by geometry)
e_x = horizontal component of e, in.
s = bolt spacing, in.
C = coefficient tabulated below

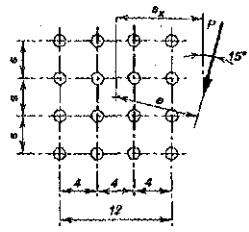

s, in.	e_x, in.	Number of Bolts in One Vertical Row, n											
		1	2	3	4	5	6	7	8	9	10	11	12
3	2	2.91	6.06	9.56	13.3	17.2	21.3	25.3	29.4	33.5	37.5	41.6	45.6
	3	2.57	5.40	8.57	12.0	15.8	19.7	23.7	27.8	31.9	36.1	40.2	44.3
	4	2.30	4.84	7.72	10.9	14.4	18.2	22.1	26.1	30.2	34.3	38.5	42.6
	5	2.06	4.37	6.99	9.93	13.2	16.7	20.5	24.4	28.5	32.6	36.7	40.9
	6	1.86	3.96	6.37	9.09	12.1	15.5	19.0	22.8	26.7	30.8	34.9	39.0
	7	1.69	3.61	5.83	8.36	11.2	14.3	17.7	21.3	25.1	29.0	33.1	37.2
	8	1.53	3.31	5.36	7.72	10.4	13.3	16.5	19.9	23.6	27.4	31.3	35.3
	9	1.40	3.04	4.95	7.15	9.64	12.4	15.4	18.7	22.2	25.8	29.7	33.6
	10	1.29	2.81	4.59	6.65	9.0	11.6	14.5	17.6	20.9	24.4	28.1	31.9
	12	1.11	2.44	4.00	5.82	7.9	10.2	12.8	15.6	18.7	21.9	25.3	28.9
	14	0.97	2.15	3.52	5.15	7.0	9.12	11.5	14.0	16.8	19.8	22.9	26.3
	16	0.86	1.92	3.15	4.61	6.3	8.21	10.3	12.7	15.2	18.0	20.9	24.0
	18	0.78	1.73	2.84	4.17	5.7	7.45	9.41	11.6	13.9	16.5	19.2	22.1
	20	0.71	1.57	2.59	3.80	5.2	6.81	8.61	10.6	12.8	15.2	17.7	20.4
	24	0.60	1.33	2.19	3.23	4.4	5.80	7.36	9.07	11.0	13.0	15.3	17.6
	28	0.52	1.15	1.90	2.80	3.9	5.05	6.41	7.91	9.59	11.4	13.4	15.5
	32	0.46	1.02	1.68	2.48	3.4	4.46	5.67	7.01	8.50	10.1	11.9	13.8
	36	0.41	0.91	1.50	2.22	3.0	4.00	5.08	6.29	7.63	9.09	10.7	12.4
6	2	2.91	6.57	10.6	14.7	18.8	22.8	26.8	30.8	34.8	38.8	42.7	46.7
	3	2.57	5.93	9.81	13.9	18.0	22.1	26.2	30.3	34.3	38.3	42.3	46.3
	4	2.30	5.37	9.04	13.0	17.2	21.3	25.5	29.6	33.6	37.7	41.7	45.8
	5	2.06	4.89	8.33	12.2	16.3	20.5	24.6	28.8	32.9	37.0	41.1	45.1
	6	1.86	4.48	7.70	11.4	15.4	19.5	23.7	27.9	32.1	36.2	40.3	44.4
	7	1.69	4.12	7.13	10.6	14.5	18.6	22.8	27.0	31.2	35.4	39.5	43.7
	8	1.53	3.80	6.62	9.95	13.7	17.7	21.8	26.0	30.2	34.4	38.6	42.8
	9	1.40	3.52	6.17	9.32	12.9	16.8	20.9	25.1	29.3	33.5	37.7	41.9
	10	1.29	3.27	5.77	8.76	12.2	16.0	20.0	24.1	28.3	32.5	36.8	41.0
	12	1.11	2.86	5.09	7.80	11.0	14.5	18.3	22.3	26.4	30.6	34.8	39.0
	14	0.97	2.54	4.53	7.00	9.92	13.2	16.8	20.6	24.6	28.7	32.8	37.1
	16	0.86	2.27	4.08	6.34	9.02	12.0	15.4	19.0	22.9	26.9	30.9	35.1
	18	0.78	2.06	3.70	5.78	8.26	11.1	14.2	17.7	21.3	25.2	29.1	33.2
	20	0.71	1.88	3.38	5.30	7.60	10.2	13.2	16.4	19.9	23.6	27.5	31.4
	24	0.60	1.59	2.88	4.54	6.54	8.84	11.5	14.4	17.5	20.9	24.5	28.2
	28	0.52	1.38	2.50	3.96	5.72	7.77	10.1	12.7	15.6	18.7	22.0	25.4
	32	0.46	1.22	2.21	3.51	5.08	6.92	9.03	11.4	14.0	16.8	19.9	23.1
	36	0.41	1.09	1.98	3.15	4.56	6.23	8.15	10.3	12.7	15.3	18.1	21.1

Table 7-13 (continued)
Coefficients C for Eccentrically Loaded Bolt Groups
Angle = 30°

Available strength of a bolt group, ϕR_n or R_n/Ω, is determined with

$$R_n = C \times r_n$$

or

LRFD	ASD
$C_{min} = \frac{P_u}{\phi r_n}$	$C_{min} = \frac{\Omega P_a}{r_n}$

where

P = required force, P_u or P_a, kips
r_n = nominal strength per bolt, kips
e = eccentricity of P with respect to centroid of bolt group, in. (not tabulated, may be determined by geometry)
e_x = horizontal component of e, in.
s = bolt spacing, in.
C = coefficient tabulated below

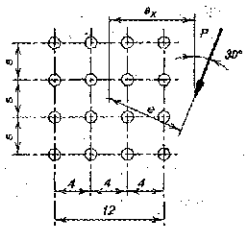

s, in.	e_x, in.	Number of Bolts in One Vertical Row, n											
		1	2	3	4	5	6	7	8	9	10	11	12
3	2	3.14	6.41	9.91	13.6	17.5	21.4	25.4	29.4	33.4	37.4	41.4	45.4
	3	2.79	5.75	8.95	12.4	16.1	20.0	23.9	27.9	31.9	35.9	40.0	44.0
	4	2.50	5.19	8.16	11.4	14.9	18.5	22.4	26.3	30.3	34.3	38.4	42.4
	5	2.25	4.71	7.45	10.5	13.7	17.2	20.9	24.7	28.6	32.6	36.7	40.7
	6	2.04	4.29	6.83	9.65	12.7	16.0	19.6	23.3	27.1	31.0	35.0	39.0
	7	1.85	3.93	6.28	8.92	11.8	15.0	18.3	21.9	25.6	29.4	33.3	37.3
	8	1.69	3.61	5.80	8.27	11.0	14.0	17.2	20.6	24.2	27.9	31.7	35.6
	9	1.55	3.33	5.38	7.70	10.3	13.1	16.2	19.4	22.9	26.5	30.2	34.0
	10	1.43	3.08	5.00	7.19	9.64	12.3	15.3	18.4	21.7	25.2	28.8	32.5
	12	1.23	2.68	4.37	6.32	8.52	11.0	13.6	16.5	19.6	22.8	26.2	29.8
	14	1.08	2.36	3.88	5.62	7.61	9.83	12.3	14.9	17.8	20.8	24.0	27.3
	16	0.96	2.11	3.47	5.05	6.86	8.89	11.1	13.6	16.2	19.0	22.0	25.2
	18	0.87	1.91	3.14	4.57	6.24	8.10	10.2	12.4	14.9	17.5	20.3	23.3
	20	0.79	1.74	2.86	4.18	5.71	7.43	9.35	11.5	13.8	16.2	18.9	21.6
	24	0.67	1.48	2.43	3.56	4.88	6.36	8.03	9.87	11.9	14.1	16.4	18.9
	28	0.58	1.28	2.11	3.10	4.25	5.55	7.02	8.65	10.4	12.4	14.5	16.7
	32	0.51	1.13	1.87	2.74	3.76	4.92	6.23	7.69	9.29	11.0	12.9	14.9
	36	0.46	1.01	1.67	2.45	3.37	4.41	5.60	6.91	8.36	9.95	11.7	13.5
6	2	3.14	6.75	10.7	14.7	18.7	22.7	26.7	30.7	34.7	38.6	42.6	46.6
	3	2.79	6.12	9.94	13.9	18.0	22.0	26.1	30.1	34.1	38.1	42.1	46.1
	4	2.50	5.58	9.23	13.1	17.2	21.2	25.3	29.4	33.4	37.5	41.5	45.5
	5	2.25	5.13	8.58	12.4	16.3	20.4	24.5	28.6	32.7	36.7	40.8	44.8
	6	2.04	4.73	8.00	11.6	15.5	19.5	23.6	27.7	31.8	35.9	40.0	44.1
	7	1.85	4.38	7.47	10.9	14.7	18.7	22.7	26.8	31.0	35.1	39.2	43.3
	8	1.69	4.06	6.98	10.3	14.0	17.9	21.9	25.9	30.1	34.2	38.3	42.4
	9	1.55	3.78	6.55	9.72	13.3	17.1	21.0	25.1	29.2	33.3	37.4	41.5
	10	1.43	3.53	6.15	9.18	12.6	16.3	20.2	24.2	28.3	32.4	36.5	40.6
	12	1.23	3.10	5.47	8.25	11.4	14.9	18.6	22.5	26.5	30.6	34.7	38.8
	14	1.08	2.76	4.90	7.46	10.4	13.7	17.2	21.0	24.9	28.8	32.9	37.0
	16	0.96	2.48	4.43	6.79	9.55	12.6	16.0	19.6	23.3	27.2	31.2	35.2
	18	0.87	2.25	4.04	6.22	8.79	11.7	14.9	18.3	21.9	25.7	29.5	33.5
	20	0.79	2.06	3.70	5.72	8.14	10.9	13.9	17.1	20.6	24.2	28.0	31.9
	24	0.67	1.76	3.17	4.93	7.06	9.48	12.2	15.2	18.3	21.7	25.3	28.9
	28	0.58	1.53	2.76	4.32	6.22	8.38	10.8	13.5	16.5	19.6	22.9	26.3
	32	0.51	1.35	2.45	3.84	5.54	7.50	9.73	12.2	14.9	17.8	20.9	24.1
	36	0.46	1.21	2.19	3.46	5.00	6.77	8.82	11.1	13.6	16.3	19.1	22.2

Table 7-13 (continued)
Coefficients C for Eccentrically Loaded Bolt Groups
Angle = 45°

Available strength of a bolt group, ϕR_n or R_n/Ω, is determined with

$$R_n = C \times r_n$$

or

LRFD	ASD
$C_{min} = \dfrac{P_u}{\phi r_n}$	$C_{min} = \dfrac{\Omega P_a}{r_n}$

where

P = required force, P_u or P_a, kips
r_n = nominal strength per bolt, kips
e = eccentricity of P with respect to centroid of bolt group, in. (not tabulated, may be determined by geometry)
e_x = horizontal component of e, in.
s = bolt spacing, in.
C = coefficient tabulated below

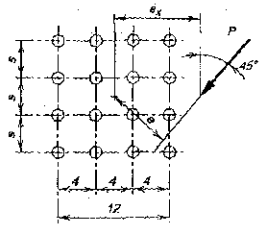

s, in.	e_x, in.	Number of Bolts in One Vertical Row, n											
		1	2	3	4	5	6	7	8	9	10	11	12
3	2	3.46	6.96	10.5	14.2	18.0	21.8	25.7	29.6	33.5	37.4	41.4	45.3
	3	3.15	6.38	9.73	13.2	16.8	20.6	24.4	28.2	32.1	36.1	40.0	44.0
	4	2.87	5.84	8.97	12.3	15.7	19.3	23.1	26.9	30.7	34.6	38.6	42.5
	5	2.61	5.36	8.30	11.4	14.7	18.2	21.8	25.5	29.3	33.2	37.1	41.0
	6	2.39	4.93	7.69	10.7	13.9	17.2	20.7	24.3	28.0	31.8	35.6	39.5
	7	2.19	4.55	7.15	9.98	13.0	16.2	19.6	23.1	26.7	30.4	34.2	38.1
	8	2.01	4.21	6.66	9.34	12.2	15.3	18.6	22.0	25.5	29.2	32.9	36.7
	9	1.86	3.90	6.21	8.76	11.5	14.5	17.7	21.0	24.4	27.9	31.6	35.3
	10	1.72	3.63	5.82	8.24	10.9	13.8	16.8	20.0	23.3	26.8	30.4	34.0
	12	1.49	3.18	5.14	7.33	9.76	12.4	15.2	18.3	21.4	24.7	28.1	31.6
	14	1.32	2.82	4.59	6.58	8.81	11.3	13.9	16.7	19.7	22.8	26.1	29.5
	16	1.17	2.53	4.14	5.95	8.00	10.3	12.7	15.4	18.2	21.2	24.3	27.5
	18	1.06	2.29	3.76	5.43	7.32	9.44	11.7	14.2	16.9	19.7	22.7	25.7
	20	0.96	2.10	3.44	4.98	6.74	8.71	10.9	13.2	15.7	18.4	21.2	24.2
	24	0.82	1.79	2.94	4.26	5.81	7.53	9.43	11.5	13.8	16.2	18.7	21.4
	28	0.71	1.56	2.56	3.73	5.09	6.61	8.31	10.2	12.2	14.4	16.7	19.2
	32	0.63	1.38	2.26	3.31	4.52	5.89	7.42	9.11	11.0	12.9	15.1	17.3
	36	0.56	1.23	2.03	2.97	4.06	5.30	6.69	8.23	9.91	11.7	13.7	15.8
6	2	3.46	7.09	10.9	14.8	18.7	22.7	26.7	30.6	34.6	38.5	42.5	46.5
	3	3.15	6.58	10.3	14.1	18.1	22.0	26.0	30.0	33.9	37.9	41.9	45.9
	4	2.87	6.09	9.65	13.4	17.3	21.3	25.3	29.3	33.3	37.3	41.2	45.2
	5	2.61	5.66	9.07	12.8	16.6	20.6	24.5	28.5	32.5	36.5	40.5	44.5
	6	2.39	5.26	8.54	12.1	15.9	19.8	23.8	27.8	31.8	35.8	39.8	43.8
	7	2.19	4.91	8.07	11.6	15.3	19.1	23.0	27.0	31.0	35.0	39.0	43.0
	8	2.01	4.59	7.63	11.0	14.6	18.4	22.3	26.2	30.2	34.2	38.2	42.2
	9	1.86	4.30	7.23	10.5	14.0	17.7	21.5	25.5	29.4	33.4	37.4	41.4
	10	1.72	4.04	6.85	10.0	13.4	17.1	20.8	24.7	28.6	32.6	36.6	40.6
	12	1.49	3.59	6.19	9.14	12.4	15.9	19.5	23.3	27.2	31.1	35.1	39.1
	14	1.32	3.22	5.62	8.38	11.4	14.8	18.3	22.0	25.8	29.6	33.5	37.5
	16	1.17	2.91	5.13	7.71	10.6	13.8	17.2	20.8	24.4	28.2	32.1	36.0
	18	1.06	2.66	4.71	7.12	9.87	12.9	16.2	19.6	23.2	26.9	30.7	34.6
	20	0.96	2.44	4.35	6.61	9.22	12.1	15.3	18.6	22.1	25.7	29.4	33.2
	24	0.82	2.10	3.76	5.76	8.11	10.8	13.7	16.7	20.0	23.4	27.0	30.6
	28	0.71	1.83	3.30	5.08	7.22	9.64	12.3	15.2	18.3	21.5	24.9	28.4
	32	0.63	1.63	2.94	4.54	6.50	8.71	11.2	13.9	16.7	19.8	23.0	26.3
	36	0.56	1.46	2.64	4.11	5.90	7.93	10.2	12.7	15.4	18.3	21.3	24.5

Table 7-13 (continued)
Coefficients C for Eccentrically Loaded Bolt Groups
Angle = 60°

Available strength of a bolt group, ϕR_n or R_n/Ω, is determined with

$$R_n = C \times r_n$$

or

LRFD	ASD
$C_{min} = \frac{P_u}{\phi r_n}$	$C_{min} = \frac{\Omega P_a}{r_n}$

where

P = required force, P_u or P_a, kips
r_n = nominal strength per bolt, kips
e = eccentricity of P with respect to centroid of bolt group, in. (not tabulated, may be determined by geometry)
e_x = horizontal component of e, in.
s = bolt spacing, in.
C = coefficient tabulated below

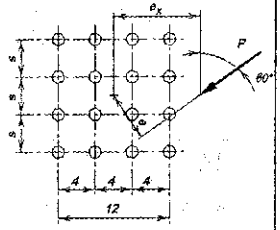

s, in.	e_x, in.	Number of Bolts in One Vertical Row, n											
		1	2	3	4	5	6	7	8	9	10	11	12
3	2	3.74	7.46	11.2	14.9	18.6	22.4	26.2	30.0	33.9	37.7	41.6	45.5
	3	3.57	7.12	10.7	14.3	17.9	21.6	25.3	29.0	32.8	36.7	40.5	44.4
	4	3.38	6.75	10.2	13.6	17.1	20.7	24.3	28.0	31.8	35.6	39.4	43.2
	5	3.17	6.36	9.61	12.9	16.4	19.8	23.4	27.0	30.7	34.5	38.2	42.0
	6	2.97	5.99	9.09	12.3	15.6	19.0	22.5	26.1	29.7	33.4	37.1	40.9
	7	2.78	5.63	8.59	11.7	14.9	18.2	21.6	25.1	28.7	32.3	36.0	39.8
	8	2.60	5.29	8.13	11.1	14.2	17.5	20.8	24.3	27.8	31.4	35.0	38.7
	9	2.44	4.98	7.69	10.6	13.6	16.8	20.1	23.4	26.9	30.4	34.0	37.7
	10	2.28	4.69	7.28	10.1	13.0	16.1	19.3	22.7	26.1	29.5	33.1	36.7
	12	2.02	4.18	6.56	9.16	11.9	14.9	18.0	21.2	24.5	27.8	31.3	34.8
	14	1.80	3.76	5.95	8.38	11.0	13.8	16.7	19.8	23.0	26.3	29.6	33.1
	16	1.62	3.40	5.43	7.70	10.2	12.8	15.6	18.6	21.6	24.8	28.1	31.4
	18	1.47	3.10	4.99	7.11	9.42	11.9	14.6	17.4	20.4	23.5	26.7	29.9
	20	1.34	2.85	4.61	6.59	8.76	11.1	13.7	16.4	19.3	22.2	25.3	28.5
	24	1.15	2.45	3.99	5.73	7.67	9.82	12.2	14.6	17.3	20.1	23.0	26.0
	28	1.00	2.15	3.51	5.06	6.80	8.76	10.9	13.2	15.6	18.2	20.9	23.8
	32	0.88	1.91	3.13	4.52	6.11	7.89	9.83	11.9	14.2	16.6	19.2	21.8
	36	0.79	1.72	2.81	4.08	5.53	7.16	8.95	10.9	13.0	15.3	17.7	20.2
6	2	3.74	7.47	11.2	15.0	18.9	22.8	26.7	30.6	34.5	38.5	42.4	46.4
	3	3.57	7.16	10.8	14.6	18.4	22.2	26.1	30.0	33.9	37.9	41.8	45.8
	4	3.38	6.82	10.4	14.1	17.8	21.7	25.5	29.4	33.3	37.3	41.2	45.1
	5	3.17	6.47	9.94	13.6	17.3	21.1	24.9	28.8	32.7	36.6	40.5	44.5
	6	2.97	6.14	9.52	13.1	16.7	20.5	24.3	28.2	32.1	36.0	39.9	43.8
	7	2.78	5.82	9.11	12.6	16.2	19.9	23.7	27.6	31.5	35.3	39.3	43.2
	8	2.60	5.52	8.73	12.1	15.7	19.4	23.2	27.0	30.8	34.7	38.6	42.5
	9	2.44	5.24	8.37	11.7	15.2	18.9	22.6	26.4	30.2	34.1	38.0	41.9
	10	2.28	4.98	8.03	11.3	14.8	18.4	22.1	25.8	29.7	33.5	37.4	41.3
	12	2.02	4.51	7.41	10.6	14.0	17.5	21.1	24.8	28.5	32.3	36.2	40.1
	14	1.80	4.10	6.86	9.91	13.2	16.6	20.1	23.8	27.5	31.2	35.0	38.9
	16	1.62	3.76	6.37	9.29	12.4	15.8	19.2	22.8	26.5	30.2	33.9	37.7
	18	1.47	3.46	5.94	8.74	11.8	15.0	18.4	21.9	25.5	29.2	32.9	36.6
	20	1.34	3.21	5.56	8.23	11.2	14.3	17.6	21.0	24.6	28.2	31.9	35.6
	24	1.15	2.79	4.91	7.34	10.1	13.0	16.2	19.5	22.9	26.4	30.0	33.6
	28	1.00	2.47	4.38	6.61	9.13	11.9	14.9	18.1	21.4	24.7	28.2	31.8
	32	0.88	2.21	3.95	5.99	8.33	11.0	13.8	16.8	20.0	23.2	26.6	30.1
	36	0.79	2.00	3.58	5.46	7.65	10.1	12.8	15.7	18.7	21.9	25.1	28.5

Table 7-13 (continued)
Coefficients C for Eccentrically Loaded Bolt Groups
Angle = 75°

Available strength of a bolt group, ϕR_n or R_n/Ω, is determined with

$$R_n = C \times r_n$$

or

LRFD	ASD
$C_{min} = \frac{P_u}{\phi r_n}$	$C_{min} = \frac{\Omega P_a}{r_n}$

where

P = required force, P_u or P_a, kips
r_n = nominal strength per bolt, kips
e = eccentricity of P with respect to centroid of bolt group, in. (not tabulated, may be determined by geometry)
e_x = horizontal component of e, in.
s = bolt spacing, in.
C = coefficient tabulated below

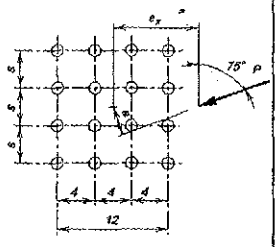

s, in.	e_x, in.	Number of Bolts in One Vertical Row, n											
		1	2	3	4	5	6	7	8	9	10	11	12
3	2	3.89	7.75	11.6	15.5	19.3	23.1	26.9	30.8	34.6	38.5	42.3	46.2
	3	3.84	7.66	11.5	15.2	19.0	22.7	26.5	30.3	34.1	37.9	41.7	45.5
	4	3.79	7.54	11.3	15.0	18.7	22.4	26.1	29.8	33.5	37.3	41.0	44.8
	5	3.72	7.40	11.1	14.7	18.3	21.9	25.6	29.3	32.9	36.7	40.4	44.1
	6	3.65	7.25	10.8	14.4	17.9	21.5	25.1	28.7	32.4	36.1	39.8	43.5
	7	3.56	7.08	10.6	14.1	17.6	21.1	24.6	28.2	31.8	35.5	39.1	42.8
	8	3.47	6.90	10.3	13.7	17.2	20.6	24.1	27.7	31.3	34.9	38.5	42.2
	9	3.37	6.71	10.0	13.4	16.8	20.2	23.7	27.2	30.7	34.3	37.9	41.6
	10	3.27	6.52	9.77	13.1	16.4	19.8	23.2	26.7	30.2	33.7	37.3	41.0
	12	3.07	6.14	9.23	12.4	15.6	18.9	22.3	25.7	29.1	32.6	36.2	39.8
	14	2.87	5.76	8.71	11.8	14.9	18.1	21.4	24.7	28.1	31.6	35.1	38.7
	16	2.68	5.40	8.22	11.1	14.2	17.3	20.5	23.8	27.2	30.6	34.1	37.6
	18	2.50	5.07	7.76	10.6	13.5	16.6	19.7	23.0	26.3	29.7	33.1	36.6
	20	2.34	4.76	7.33	10.0	12.9	15.9	19.0	22.2	25.5	28.8	32.2	35.6
	24	2.06	4.23	6.57	9.10	11.8	14.7	17.6	20.7	23.9	27.1	30.4	33.8
	28	1.82	3.78	5.94	8.30	10.9	13.5	16.4	19.3	22.4	25.5	28.7	32.0
	32	1.63	3.41	5.41	7.61	10.0	12.6	15.3	18.1	21.0	24.1	27.2	30.4
	36	1.48	3.11	4.95	7.01	9.26	11.7	14.3	17.0	19.8	22.8	25.8	28.9
6	2	3.89	7.74	11.6	15.4	19.3	23.1	27.0	30.9	35.2	39.1	43.0	47.0
	3	3.84	7.64	11.4	15.2	19.0	22.8	26.6	30.5	34.4	38.3	42.2	46.1
	4	3.79	7.52	11.2	14.9	18.7	22.5	26.3	30.1	34.0	37.8	41.7	45.6
	5	3.72	7.38	11.0	14.7	18.4	22.1	25.9	29.7	33.6	37.4	41.3	45.2
	6	3.65	7.23	10.8	14.4	18.1	21.8	25.6	29.3	33.2	37.0	40.8	44.7
	7	3.56	7.07	10.6	14.2	17.8	21.5	25.2	29.0	32.8	36.6	40.4	44.3
	8	3.47	6.90	10.4	13.9	17.5	21.2	24.9	28.6	32.4	36.2	40.0	43.9
	9	3.37	6.73	10.1	13.6	17.2	20.8	24.5	28.3	32.0	35.8	39.6	43.5
	10	3.27	6.56	9.92	13.4	16.9	20.5	24.2	27.9	31.7	35.5	39.3	43.1
	12	3.07	6.21	9.48	12.9	16.4	19.9	23.6	27.3	31.0	34.7	38.5	42.3
	14	2.87	5.88	9.07	12.4	15.9	19.4	23.0	26.6	30.3	34.1	37.8	41.6
	16	2.68	5.57	8.67	11.9	15.4	18.8	22.4	26.0	29.7	33.4	37.1	40.9
	18	2.50	5.27	8.29	11.5	14.9	18.3	21.9	25.5	29.1	32.8	36.5	40.2
	20	2.34	4.99	7.94	11.1	14.4	17.8	21.3	24.9	28.5	32.2	35.8	39.6
	24	2.06	4.50	7.29	10.3	13.6	16.9	20.4	23.9	27.4	31.0	34.7	38.3
	28	1.82	4.08	6.73	9.67	12.8	16.1	19.4	22.9	26.4	30.0	33.6	37.2
	32	1.63	3.73	6.25	9.06	12.1	15.3	18.6	22.0	25.4	29.0	32.5	36.1
	36	1.48	3.43	5.82	8.51	11.4	14.5	17.8	21.1	24.5	28.0	31.5	35.1

Table 7-14
Dimensions of High-Strength Fasteners, in.

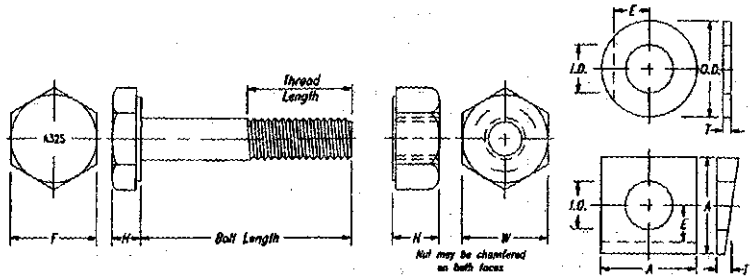

Measurement		Nominal Bolt Diameter, in								
		1/2	5/8	3/4	7/8	1	1 1/8	1 1/4	1 3/8	1 1/2
A325 and A490 Bolts[a]	Width Across Flats, *F*	7/8	1 1/16	1 1/4	1 7/16	1 5/8	1 13/16	2	2 3/16	2 3/8
	Height, *H*	5/16	25/64	15/32	35/64	39/64	11/16	25/32	27/32	15/16
	Thread Length	1	1 1/4	1 3/8	1 1/2	1 3/4	2	2	2 1/4	2 1/4
	Bolt Length = Grip + Washer Thickness + →	1 1/16	7/8	1	1 1/8	1 1/4	1 1/2	1 5/8	1 3/4	1 7/8
A563 Nuts[a]	Width Across Flats, *W*	7/8	1 1/16	1 1/4	1 7/16	1 5/8	1 13/16	2	2 3/16	2 3/8
	Height, *H*	31/64	39/64	47/64	55/64	63/64	1 7/64	1 7/32	1 11/32	1 15/32
F436 Circular Washers[b]	Nom. Outside Diameter, *OD*	1 1/16	1 5/16	1 15/32	1 3/4	2	2 1/4	2 1/2	2 3/4	3
	Nom. Inside Diameter, *ID*	17/32	11/16	13/16	15/16	1 1/8	1 1/4	1 3/8	1 1/2	1 5/8
	Thickns., *T* Min.	0.097	0.122	0.122	0.136	0.136	0.136	0.136	0.136	0.136
	Thickns., *T* Max.	0.177	0.177	0.177	0.177	0.177	0.177	0.177	0.177	0.177
	Min. Edge Distance, *E*[c]	7/16	9/16	21/32	25/32	7/8	1	1 3/32	1 7/32	1 5/16
F436 Square or Rect. Washers[b,d]	Min. Side Dimension, *A*	1 3/4	1 3/4	1 3/4	1 3/4	1 3/4	2 1/4	2 1/4	2 1/4	2 1/4
	Mean Thickness, *T*	5/16	5/16	5/16	5/16	5/16	5/16	5/16	5/16	5/16
	Taper in Thickness	2:12	2:12	2:12	2:12	2:12	2:12	2:12	2:12	2:12
	Min. Edge Distance, *E*[c]	7/16	9/16	21/32	25/32	7/8	1	1 3/32	1 7/32	1 5/16

[a] Tolerances as specified in ASME B18.2.6

[b] ASTM F436 washer tolerances, in.:

Nominal outside diameter	−1/32; +1/32
Nominal diameter of hole	−0; +1/32
Flatness: max. deviation from straight-edge placed on cut side shall not exceed	0.010
Concentricity: center of hole to outside diameter (full indicator runout)	0.030
Burr shall not project above immediately adjacent washer surface more than	0.010

[c] For clipped washers only

[d] For use with American standard beams (S) and channels (C)

Table 7-15
Entering and Tightening Clearance, in. Conventional ASTM A325 and A490 Bolts

Aligned Bolts

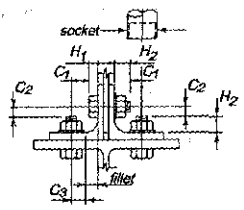

Nominal Bolt Dia.	Socket Dia.	H_1	H_2	C_1	C_2	C_3 Circular	C_3 Clipped
5/8	1 3/4	25/64	1 1/4	1	11/16	11/16	9/16
3/4	2 1/4	15/32	1 3/8	1 1/4	3/4	3/4	11/16
7/8	2 1/2	35/64	1 1/2	1 3/8	7/8	7/8	13/16
1	2 5/8	39/64	1 5/8	1 7/16	15/16	1	7/8
1 1/8	2 7/8	11/16	1 7/8	1 9/16	1 1/16	1 1/8	1
1 1/4	3 1/8	25/32	2	1 11/16	1 1/8	1 1/4	1 1/8
1 3/8	3 1/4	27/32	2 1/8	1 3/4	1 1/4	1 3/8	1 1/4
1 1/2	3 1/2	15/16	2 1/4	1 7/8	15/16	1 1/2	1 5/16

Staggered Bolts

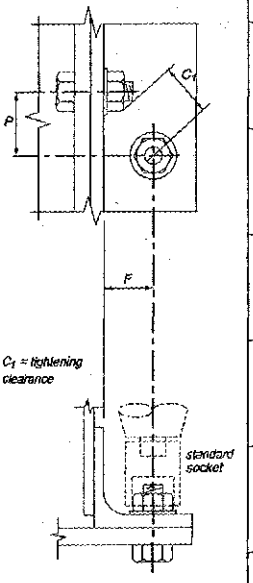

F	Stagger P, in. — Nominal Bolt Diameter, in. 5/8	3/4	7/8	1	1 1/8	1 1/4	1 3/8	1 1/2
1	1 5/8							
1 1/8	1 1/2							
1 1/4	1 1/2	1 15/16						
1 3/8	1 7/16	1 7/8	2 3/16					
1 1/2	1 1/4	1 13/16	2 1/8	2 5/16				
1 5/8	1 1/4	1 3/4	2 1/16	2 5/16	2 9/16			
1 3/4	1 3/16	1 11/16	2	2 1/4	2 9/16	2 13/16	3	
1 7/8	1 1/8	1 9/16	1 15/16	2 3/16	2 1/2	2 3/4	3	3 3/4
2	1	1 1/2	1 13/16	2 1/8	2 7/16	2 3/4	2 15/16	3 1/4
2 1/8	13/16	1 3/8	1 11/16	2	2 3/8	2 11/16	2 15/16	3 3/16
2 1/4		1 1/4	1 9/16	1 7/8	2 1/4	2 5/8	2 7/8	3 3/16
2 3/8		1 1/8	1 1/2	1 3/4	2 1/8	2 1/2	2 13/16	3 1/8
2 1/2		7/8	1 3/8	1 5/8	2	2 7/16	2 3/4	3 1/16
2 5/8			1 3/16	1 1/2	1 15/16	2 5/16	2 7/8	3
2 3/4			15/16	1 3/8	1 7/8	2 1/8	2 1/2	2 7/8
2 7/8				1 3/16	1 3/4	2 1/16	2 3/8	2 13/16
3				7/8	1 5/8	2	2 1/4	2 11/16
3 1/8					1 1/2	1 7/8	2 1/8	2 1/2
3 1/4					1 1/4	1 3/4	2	2 3/8
3 3/8					15/16	1 5/8	1 15/16	2 1/4
3 1/2						1 3/8	1 3/4	2 1/8
3 5/8						1 1/16	1 9/16	2
3 3/4							1 5/16	1 7/8
3 7/8								1 11/16
4								1 3/8

Notes:

H_1 = height of head
H_2 = maximum shank extension*
C_1 = clearance for tightening
C_2 = clearance for entering
C_3 = clearance for fillet*
P = bolt stagger
F = clearance for tightening staggered bolts
* Based on the use of one ASTM F436 washer

Table 7-16
Entering and Tightening Clearance, in.
Tension Control ASTM F1852 and F2280 Bolts

Aligned Bolts

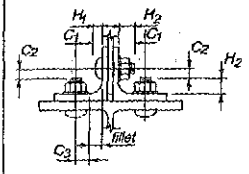

Tools	Nominal Bolt Dia.	H_1	H_2	C_1	C_2	C_3 Circular	C_3 Clipped
Large Tools	**$4^1/_4$-in. Diameter Critical**						
	$^3/_4$	$^1/_2$	$1^3/_8$	$2^1/_8$	$^7/_8$	$^3/_4$	—
	$^7/_8$	$^9/_{16}$	$1^1/_2$	$2^1/_8$	1	$^7/_8$	—
	1	$^5/_8$	$1^3/_4$	$2^1/_8$	$1^1/_8$	1	—
	$2^3/_4$-in. Diameter Critical						
	$^3/_4$	$^1/_2$	$1^3/_8$	$1^3/_8$	$^7/_8$	$^3/_4$	—
	$^7/_8$	$^9/_{16}$	$1^1/_2$	$1^3/_8$	1	$^7/_8$	—
	1	$^5/_8$	$1^3/_4$	$1^3/_8$	$1^1/_8$	1	—
Small Tools	**$3^1/_8$-in. Diameter Critical**						
	$^5/_8$	$^7/_{16}$	$1^1/_4$	$1^5/_8$	$^{13}/_{16}$	$^{11}/_{16}$	—
	$^3/_4$	$^1/_2$	$1^3/_8$	$1^5/_8$	$^7/_8$	$^3/_4$	—
	$^7/_8$	$^9/_{16}$	$1^1/_2$	$1^5/_8$	1	$^7/_8$	—
	$2^1/_8$-in. Diameter Critical						
	$^5/_8$	$^7/_{16}$	$1^1/_4$	$1^1/_8$	$^{13}/_{16}$	$^{11}/_{16}$	—
	$^3/_4$	$^1/_2$	$1^3/_8$	$1^1/_8$	$^7/_8$	$^3/_4$	—
	$^7/_8$	$^9/_{16}$	$1^1/_2$	$1^1/_8$	1	$^7/_8$	—

Staggered Bolts

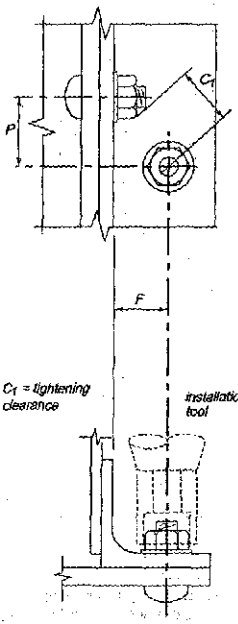

	Stagger P, in.			
	Nominal Bolt Diameter, in.			
F	$^5/_8$	$^3/_4$	$^7/_8$	1
$1^1/_4$	$1^{13}/_{16}$			
$1^3/_8$	$1^3/_4$	$2^1/_{16}$	$2^1/_4$	$2^7/_{16}$
$1^1/_2$	$1^{11}/_{16}$	2	$2^3/_{16}$	$2^3/_8$
$1^5/_8$	$1^9/_{16}$	$1^7/_8$	$2^1/_{16}$	$2^1/_4$
$1^3/_4$	$1^1/_2$	$1^{13}/_{16}$	2	$2^3/_{16}$
$1^7/_8$	$1^7/_{16}$	$1^3/_4$	$1^7/_8$	$2^1/_8$
2	$1^5/_{16}$	$1^5/_8$	$1^3/_4$	2
$2^1/_8$	$1^1/_4$	$1^9/_{16}$	$1^{11}/_{16}$	$1^{15}/_{16}$
$2^1/_4$	$1^3/_{16}$	$1^1/_2$	$1^9/_{16}$	$1^7/_8$
$2^3/_8$	$1^1/_8$	$1^3/_8$	$1^1/_2$	$1^3/_4$
$2^1/_2$	1	$1^5/_{16}$	$1^3/_8$	$1^{11}/_{16}$
$2^5/_8$		$1^3/_{16}$	$1^5/_{16}$	$1^9/_{16}$
$2^3/_4$		$1^1/_8$	$1^3/_{16}$	$1^1/_2$
$2^7/_8$			$1^1/_8$	$1^3/_8$
3				$1^5/_{16}$
$3^3/_8$				$1^5/_{16}$

Notes:
H_1 = height of head
H_2 = maximum shank extension*
C_1 = clearance for tightening
C_2 = clearance for entering
C_3 = clearance for fillet*
P = bolt stagger
F = clearance for tightening staggered bolts
* Based on one standard hardened washer

Table 7-17
Threading Dimensions for High-Strength and Non-High-Strength Bolts

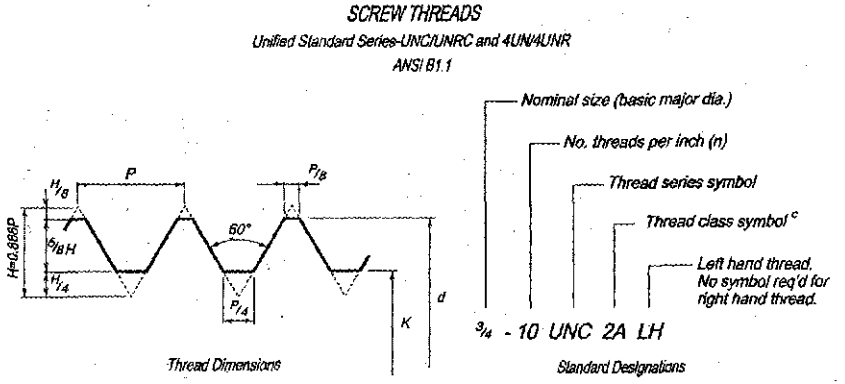

Diameter		Area			
Bolt Diameter *d*, in.	Min. Root *K*, in.	Gross Bolt Area, in.^{2}	Min. Root Area, in.^{2}	Net Tensile Area[a], in.^{2}	Threads per inch, *n*[b]
1/4	0.196	0.0490	0.0301	0.0320	20
3/8	0.307	0.110	0.0742	0.0780	16
1/2	0.417	0.196	0.136	0.142	13
5/8	0.527	0.307	0.218	0.226	11
3/4	0.642	0.442	0.323	0.334	10
7/8	0.755	0.601	0.447	0.462	9
1	0.865	0.785	0.587	0.606	8
1 1/8	0.970	0.994	0.740	0.763	7
1 1/4	1.10	1.23	0.942	0.969	7
1 3/8	1.19	1.49	1.12	1.16	6
1 1/2	1.32	1.77	1.37	1.41	6
1 3/4	1.53	2.41	1.85	1.90	5
2	1.76	3.14	2.43	2.50	4.5
2 1/4	2.01	3.98	3.17	3.25	4.5
2 1/2	2.23	4.91	3.90	4.00	4
2 3/4	2.48	5.94	4.83	4.93	4
3	2.73	7.07	5.85	5.97	4
3 1/4	2.98	8.30	6.97	7.10	4
3 1/2	3.23	9.62	8.19	8.33	4
3 3/4	3.48	11.0	9.51	9.66	4
4	3.73	12.6	10.9	11.1	4

[a] Net tensile area $= 0.7854 \times \left(d - \frac{0.9743}{n}\right)^2$

[b] For diameters listed, thread series is UNC (coarse). For larger diameters, thread series is 4UN.

[c] 2A denotes Class 2A fit applicable to external threads;
2B denotes corresponding Class 2B fit for internal threads.

Table 7-18
Weights of High-Strength Fasteners, pounds per 100 count

Bolt Length, in.		Nominal Bolt Diameter, in.								
		1/2	5/8	3/4	7/8	1	1 1/8	1 1/4	1 3/8	1 1/2
100, Conventional A325 or A490 Bolts with A563 Nuts	1	16.5	29.4	47.0	—	—	—	—	—	—
	1 1/4	17.8	31.1	49.6	74.4	104	—	—	—	—
	1 1/2	19.2	33.1	52.2	78.0	109	148	197	—	—
	1 3/4	20.5	35.3	55.3	81.9	114	154	205	261	333
	2	21.9	37.4	58.4	86.1	119	160	212	270	344
	2 1/4	23.3	39.8	61.6	90.3	124	167	220	279	355
	2 1/2	24.7	41.7	64.7	94.6	130	174	229	290	366
	2 3/4	26.1	43.9	67.8	98.8	135	181	237	300	379
	3	27.4	46.1	70.9	103	141	188	246	310	391
	3 1/4	28.8	48.2	74.0	107	146	195	255	321	403
	3 1/2	30.2	50.4	77.1	111	151	202	263	332	416
	3 3/4	31.6	52.5	80.2	116	157	209	272	342	428
	4	33.0	54.7	83.3	120	162	216	280	353	441
	4 1/4	34.3	56.9	86.4	124	168	223	289	363	453
	4 1/2	35.7	59.0	89.5	128	173	230	298	374	465
	4 3/4	37.1	61.2	92.7	133	179	237	306	384	478
	5	38.5	63.3	95.8	137	184	244	315	395	490
	5 1/4	39.9	65.5	98.9	141	190	251	324	405	503
	5 1/2	41.2	67.7	102	146	196	258	332	416	515
	5 3/4	42.6	69.8	105	150	201	265	341	426	527
	6	44.0	71.9	108	154	207	272	349	437	540
	6 1/4	—	74.1	111	158	212	279	358	447	552
	6 1/2	—	76.3	114	163	218	286	367	458	565
	6 3/4	—	78.5	118	167	223	293	375	468	577
	7	—	80.6	121	171	229	300	384	479	589
	7 1/4	—	82.8	124	175	234	307	392	489	602
	7 1/2	—	84.9	127	179	240	314	401	500	614
	7 3/4	—	87.1	130	183	246	321	410	510	626
	8	—	89.2	133	187	251	328	418	521	639
	8 1/4	—	—	—	192	257	335	427	531	651
	8 1/2	—	—	—	196	262	342	435	542	664
	8 3/4	—	—	—	—	—	—	444	552	676
	9	—	—	—	—	—	—	453	563	689
	Per inch add'tl. Add	5.50	8.60	12.4	16.9	22.1	28.0	34.4	42.5	49.7
100, F436 Circular Washers		2.10	3.60	4.80	7.00	9.40	11.3	13.8	16.8	20.0
100, F436 Square Washers		23.1	22.4	21.0	20.2	19.2	34.0	31.6	31.2	32.9

This table conforms to weight standards adopted by the Industrial Fasteners Institute (IFI), updated for washer weights.

Table 7-19
Dimensions of Non-High-Strength Fasteners, in.

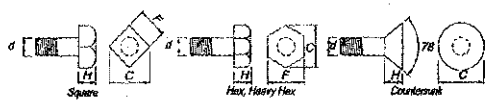

Bolts Dia d, in.		Square			Hex			Heavy Hex			Countersunk		Min. Thrd. Length, in.	
		F, in.	C, in.	H, in.	F, in.	C, in.	H, in.	F, in.	C, in.	H, in.	C, in.	H, in.	L ≤ 6 in.	L > 6 in.
Bolts	1/4	3/8	1/2	3/16	7/16	1/2	3/16	—	—	—	1/2	1/8	3/4	1
	3/8	9/16	13/16	1/4	9/16	5/8	1/4	—	—	—	11/16	3/16	1	1 1/4
	1/2	3/4	1 1/16	5/16	3/4	7/8	3/8	7/8	1	3/8	7/8	1/4	1 1/4	1 1/2
	5/8	15/16	1 5/16	7/16	15/16	1 1/16	7/16	1 1/16	1 1/4	7/16	1 1/8	5/16	1 1/2	1 3/4
	3/4	1 1/8	1 9/16	1/2	1 1/8	1 5/16	1/2	1 1/4	1 7/16	1/2	1 3/8	3/8	1 3/4	2
	7/8	1 5/16	1 7/8	5/8	1 5/16	1 1/2	9/16	1 7/16	1 11/16	9/16	1 9/16	7/16	2	2 1/4
	1	1 1/2	2 1/8	11/16	1 1/2	1 3/4	11/16	1 5/8	1 7/8	11/16	1 13/16	1/2	2 1/4	2 1/2
	1 1/8	1 11/16	2 3/8	3/4	1 11/16	1 15/16	3/4	1 13/16	2 1/16	3/4	2 1/16	9/16	2 1/2	2 3/4
	1 1/4	1 7/8	2 5/8	7/8	1 7/8	2 3/16	7/8	2	2 5/16	7/8	2 1/4	5/8	2 3/4	3
	1 3/8	2 1/16	2 15/16	15/16	2 1/16	2 3/8	15/16	2 3/16	2 1/2	15/16	2 1/2	11/16	3	3 1/4
	1 1/2	2 1/4	3 3/16	1	2 1/4	2 5/8	1	2 3/8	2 3/4	1	2 11/16	3/4	3 1/4	3 1/2
	1 3/4	—	—	—	2 5/8	3	1 3/16	2 3/4	3 3/16	1 3/16	—	—	3 3/4	4
	2	—	—	—	3	3 7/16	1 3/8	3 1/8	3 5/8	1 3/8	—	—	4 1/4	4 1/2
	2 1/4	—	—	—	3 3/8	3 7/8	1 1/2	3 1/2	4 1/16	1 1/2	—	—	4 3/4	5
	2 1/2	—	—	—	3 3/4	4 5/16	1 11/16	3 7/8	4 1/2	1 11/16	—	—	5 1/4	5 1/2
	2 3/4	—	—	—	4 1/8	4 3/4	1 13/16	4 1/4	4 15/16	1 13/16	—	—	5 3/4	6
	3	—	—	—	4 1/2	5 3/16	2	4 5/8	5 5/16	2	—	—	6	6 1/2
	3 1/4	—	—	—	4 7/8	5 5/8	2 3/16	—	—	—	—	—	6	7
	3 1/2	—	—	—	5 1/4	6 1/16	2 5/16	—	—	—	—	—	6	7 1/2
	3 3/4	—	—	—	5 5/8	6 1/2	2 1/2	—	—	—	—	—	6	8
	4	—	—	—	6	6 15/16	2 11/16	—	—	—	—	—	6	8 1/2

Notes:
For high-strength bolt and nut dimensions, refer to Table 7-14.
Square, hex and heavy hex bolt dimensions, rounded to nearest 1/16 in., are in accordance with ANSI B18.2.1.
Countersunk bolt dimensions, rounded to the nearest 1/16 in., are in accordance with ANSI 18.5.
Minimum thread length = $2d + 1/4$ in. for bolts up to 6 in. long, and $2d + 1/2$ in. for bolts longer than 6 in.

Table 7-19 (continued)
Dimensions of Non-High-Strength Fasteners, in.

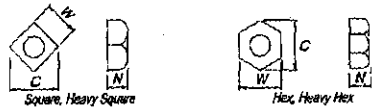

Nut Size, in.		Square			Hex			Heavy Square			Heavy Hex		
		W, in.	*C*, in.	*N*, in.	*W*, in.	*C*, in.	*N*, in.	*W*, in.	*C*, in.	*N*, in.	*W*, in.	*C*, in.	*N*, in.
Nuts	1/4	7/16	5/8	1/4	7/16	1/2	3/16	1/2	11/16	1/4	1/2	9/16	1/4
	3/8	5/8	7/8	5/16	9/16	5/8	1/4	11/16	1	3/8	11/16	13/16	3/8
	1/2	4/5	1 1/8	7/16	3/4	7/8	3/8	7/8	1 1/4	1/2	7/8	1	1/2
	5/8	1	1 7/16	9/16	15/16	1 1/16	7/16	1 1/16	1 1/2	5/8	1 1/16	1 1/4	5/8
	3/4	1 1/8	1 9/16	11/16	1 1/8	1 5/16	1/2	1 1/4	1 3/4	3/4	1 1/4	1 7/16	3/4
	7/8	1 5/16	1 7/8	3/4	1 5/16	1 1/2	9/16	1 7/16	2 1/16	7/8	1 7/16	1 11/16	7/8
	1	1 1/2	2 1/8	7/8	1 1/2	1 3/4	11/16	1 5/8	2 5/16	1	1 5/8	1 7/8	1
	1 1/8	1 11/16	2 3/8	1	1 11/16	1 15/16	3/4	1 13/16	2 9/16	1 1/8	1 13/16	2 1/16	1 1/8
	1 1/4	1 7/8	2 5/8	1 1/8	1 7/8	2 3/16	7/8	2	2 13/16	1 1/4	2	2 5/16	1 1/4
	1 3/8	2 1/16	2 15/16	1 1/4	2 1/16	2 3/8	15/16	2 3/16	3 1/8	1 3/8	2 3/16	2 1/2	1 3/8
	1 1/2	2 1/4	3 3/16	1 5/16	2 1/4	2 5/8	1	2 3/8	3 3/8	1 1/2	2 3/8	2 3/4	1 1/2
	1 3/4	—	—	—	—	—	—	—	—	—	2 3/4	3 3/16	1 3/4
	2	—	—	—	—	—	—	—	—	—	3 1/8	3 5/8	2
	2 1/4	—	—	—	—	—	—	—	—	—	3 1/2	4 1/16	2 3/16
	2 1/2	—	—	—	—	—	—	—	—	—	3 7/8	4 1/2	2 7/16
	2 3/4	—	—	—	—	—	—	—	—	—	4 1/4	4 15/16	2 11/16
	3	—	—	—	—	—	—	—	—	—	4 5/8	5 5/16	2 15/16
	3 1/4	—	—	—	—	—	—	—	—	—	5	5 3/4	3 3/16
	3 1/2	—	—	—	—	—	—	—	—	—	5 3/8	6 3/16	3 7/16
	3 3/4	—	—	—	—	—	—	—	—	—	5 3/4	6 5/8	3 11/16
	4	—	—	—	—	—	—	—	—	—	6 1/8	7 1/16	3 15/16

Notes:
For high-strength bolt and nut dimensions, refer to Table 7-14.
Square, hex and heavy hex bolt dimensions, rounded to nearest 1/16 in., are in accordance with ANSI B18.2.1.
Countersunk bolt dimensions, rounded to the nearest 1/16 in., are in accordance with ANSI 18.5.
Minimum thread length = $2d + 1/4$ in. for bolts up to 6 in. long, and $2d + 1/2$ in. for bolts longer than 6 in.

Table 7-20
Weights of Non-High-Strength Fasteners, pounds

Bolt Length, in.		Nominal Bolt Diameter, in.								
		1/4	3/8	1/2	5/8	3/4	7/8	1	1 1/8	1 1/4
100 Square Bolts with Hexagonal Nuts*	1	2.38	6.11	13.0	24.1	38.9	—	—	—	—
	1 1/4	2.71	6.71	14.0	25.8	41.5	—	—	—	—
	1 1/2	3.05	7.47	15.1	27.6	44.0	67.3	95.1	—	—
	1 3/4	3.39	8.23	16.5	29.3	46.5	70.8	99.7	—	—
	2	3.73	8.99	17.8	31.4	49.1	74.4	104	143	—
	2 1/4	4.06	9.75	19.1	33.5	52.1	77.9	109	149	—
	2 1/2	4.40	10.5	20.5	35.6	55.1	82.0	114	155	206
	2 3/4	4.74	11.3	21.8	37.7	58.2	86.1	119	161	213
	3	5.07	12.0	23.2	39.8	61.2	90.2	124	168	221
	3 1/4	5.41	12.8	24.5	41.9	64.2	94.4	129	174	229
	3 1/2	5.75	13.5	25.9	44.0	67.2	98.5	135	181	237
	3 3/4	6.09	14.3	27.2	46.1	70.2	103	140	188	246
	4	6.42	15.1	28.6	48.2	73.3	107	145	195	254
	4 1/4	6.76	15.8	29.9	50.3	76.3	111	151	202	262
	4 1/2	7.10	16.6	31.3	52.3	79.3	115	156	208	271
	4 3/4	7.43	17.3	32.6	54.4	82.3	119	162	215	279
	5	7.77	18.1	33.9	56.5	85.3	123	167	222	288
	5 1/4	8.11	18.9	35.3	58.6	88.4	127	172	229	296
	5 1/2	8.44	19.6	36.6	60.7	91.4	131	178	236	304
	5 3/4	8.78	20.4	38.0	62.8	94.4	136	183	242	313
	6	9.12	21.1	39.3	64.9	97.4	140	188	249	321
	6 1/4	9.37	21.7	40.4	66.7	100	143	193	255	329
	6 1/2	9.71	22.5	41.8	68.7	103	147	198	262	337
	6 3/4	10.1	23.3	43.1	70.8	106	151	204	269	345
	7	10.4	24.0	44.4	72.9	109	156	209	275	354
	7 1/4	10.7	24.8	45.8	75.0	112	160	214	282	362
	7 1/2	11.0	25.5	47.1	77.1	115	164	220	289	371
	7 3/4	11.4	26.3	48.5	79.2	118	168	225	296	379
	8	11.7	27.0	49.8	81.3	121	172	231	303	387
	8 1/2	—	28.6	52.5	85.5	127	180	241	316	404
	9	—	30.1	55.2	89.7	133	189	252	330	421
	9 1/2	—	31.6	57.9	93.9	139	197	263	343	438
	10	—	66.1	60.6	98.1	145	205	274	357	454
	10 1/2	—	34.6	63.3	102	151	213	284	371	471
	11	—	36.2	66.0	106	157	221	295	384	488
	11 1/2	—	37.7	68.7	110	163	230	306	398	505
	12	—	39.2	71.3	115	170	238	316	411	522
	12 1/2	—	—	74.0	119	176	246	327	425	538
	13	—	—	76.7	123	182	254	338	439	556
	13 1/2	—	—	79.4	127	188	263	349	452	572
	14	—	—	82.1	131	194	271	359	466	589
	14 1/2	—	—	84.8	135	200	279	370	479	605
	15	—	—	87.5	140	206	287	381	493	622
	15 1/2	—	—	90.2	144	212	296	392	507	639
	16	—	—	92.9	148	218	304	402	520	656
	Per inch add'tl. Add	1.3	3.0	5.4	8.4	12.1	16.5	21.4	27.2	33.6

Notes:
For weight of high-strength fasteners, see Table 7-19.
This table conforms to weight standards adopted by the Industrial Fasteners Institute (IFI).
*Square bolt per ANSI B 18.2.1, hexagonal nut per ANSI B18.2.2. For other non-high-strength fasteners, refer to Tables 7-21 and 7-22.

Table 7-21
Weight Adjustments
for Combinations of Non-High-Strength Fasteners Other than Tabulated in Table 7-20

Combinations of 100		Add or Subtr.	Nominal Bolt Diameter, in.								
			1/4	3/8	1/2	5/8	3/4	7/8	1	1 1/8	1 1/4
Square Bolts With	Square Nuts	+	0.1	1.0	2.0	3.4	3.5	5.5	8.0	12.2	16.3
	Heavy Square Nuts	+	0.6	2.1	4.1	7.0	11.6	17.2	23.2	32.1	41.2
	Heavy Hex Nuts	+	0.4	1.5	2.8	4.6	7.6	10.7	14.2	18.9	24.3
100, Square Bolts with Hexagonal Nuts*	Square Nuts	+	0.1	0.6	1.1	1.4	0.2	0.5	-0.2	-0.1	-1.7
	Hex Nuts	−	0.0	0.4	0.9	2.0	3.3	5.0	8.2	12.3	18.0
	Heavy Square Nuts	+	0.6	1.7	3.2	5.0	8.3	12.2	15.0	19.8	23.2
	Heavy Hex Nuts	+	0.4	1.1	1.9	2.6	4.3	5.7	6.0	6.6	6.3
100, Hex Bolts	Heavy Square Nuts	+	—	—	4.7	7.3	11.3	16.5	20.7	27.0	33.6
	Heavy Hex Nuts	+	—	—	3.4	4.9	7.3	10.0	11.7	13.8	16.7

Notes:
For weights of high-strength fasteners, see Table 7-18.
This table conforms to weight standards adopted by the Industrial Fasteners Institute (IFI).
*Add or subtract value in this table to or from the value in Table 7-20.

Table 7-22
Weights of Non-High-Strength Bolts
of Diameter Greater than 1 1/4 in., pounds

Weight of 100 Each		Nominal Bolt Diameter, in.											
		1 3/8	1 1/2	1 3/4	2	2 1/4	2 1/2	2 3/4	3	3 1/4	3 1/2	3 3/4	4
Heads of:	Square Bolts	105	130	—	—	—	—	—	—	—	—	—	—
	Hex Bolts	84.0	112	178	259	369	508	680	900	1120	1390	1730	2130
	Heavy Hex Bolts	95.0	124	195	280	397	541	720	950	—	—	—	—
One Linear Inch, Unthreaded Shank		42.0	50.0	68.2	89.0	113	139	168	200	235	272	313	356
One Linear Inch, Threaded Shank		35.0	42.5	57.4	75.5	97.4	120	147	178	210	246	284	325
Square Nuts		94.5	122	—	—	—	—	—	—	—	—	—	—
Heavy Square Nuts		125	161	—	—	—	—	—	—	—	—	—	—
Heavy Hex Nuts		102	131	204	299	419	564	738	950	1190	1530	1810	2180

– Indicates that the bolt size is not available

PART 8

DESIGN CONSIDERATIONS FOR WELDS

SCOPE 8–3
GENERAL REQUIREMENTS FOR WELDED JOINTS 8–3
Consumables 8–3
Thermal Cutting 8–3
Air-Arc Gouging 8–3
Inspection 8–4
Visual Testing (VT) 8–4
Penetrant Testing (PT) 8–4
Magnetic-Particle Testing (MT) 8–5
Ultrasonic Testing (UT) 8–6
Radiographic Testing (RT) 8–7
PROPER SPECIFICATION OF JOINT TYPE 8–7
Selection of Weld Type 8–7
Weld Symbols 8–8
Available Strength 8–8
Effect of Load Angle 8–9
CONCENTRICALLY LOADED WELD GROUPS 8–9
ECCENTRICALLY LOADED WELD GROUPS 8–9
Eccentricity in the Plane of the Faying Surface 8–9
Instantaneous Center of Rotation Method 8–9
Elastic Method 8–12
Eccentricity Normal to the Plane of the Faying Surface 8–14
OTHER SPECIFICATION REQUIREMENTS AND DESIGN CONSIDERATIONS 8–15
Special Requirements for Heavy Shapes and Plates 8–15
Placement of Weld Groups 8–15
Welds in Combination with Bolts or Rivets 8–15
Fatigue 8–15
One-Sided Fillet Welds 8–15
Welding Considerations and Appurtenances 8–15
Clearance Requirements 8–15
Excessive Welding 8–17

Minimum Shelf Dimensions for Fillet Welds 8–17
Beam Copes and Weld Access Holes 8–18
Corner Clips 8–18
Backing Bars 8–19
Spacer Bars 8–19
Weld Tabs 8–19
Tack Welds 8–21
Lamellar Tearing 8–21
Prior Qualification of Welding Procedures 8–21
Painting Welded Connections 8–22
WELDING CONSIDERATIONS FOR HSS 8–23
HSS Welding Requirements in AWS D1.1 8–24
Clause 2, Part D 8–25
Clause 3 8–25
Clause 4 8–25
Clause 5 8–26
Clause 6 8–26
Weld Sizing for Uneven Distribution of Loads 8–26
Detailing Considerations 8–27
DESIGN TABLE DISCUSSION 8–27
PART 8 REFERENCES 8–32
DESIGN TABLES 8–33
Table 8-1. Coefficients, *C*, for Concentrically Loaded Weld Group Elements 8–33
Table 8-2. Prequalified Welded Joints 8–34
Table 8-3. Electrode Strength Coefficient, C_1 8–65
Table 8-4. Coefficients, *C*, for Eccentrically Loaded Weld Groups 8–66
Table 8-5. Coefficients, *C*, for Eccentrically Loaded Weld Groups 8–72
Table 8-6. Coefficients, *C*, for Eccentrically Loaded Weld Groups 8–78
Table 8-7. Coefficients, *C*, for Eccentrically Loaded Weld Groups 8–84
Table 8-8. Coefficients, *C*, for Eccentrically Loaded Weld Groups 8–90
Table 8-9. Coefficients, *C*, for Eccentrically Loaded Weld Groups 8–96
Table 8-10. Coefficients, *C*, for Eccentrically Loaded Weld Groups 8–102
Table 8-10a. Coefficients, *C*, for Eccentrically Loaded Weld Groups 8–108
Table 8-11. Coefficients, *C*, for Eccentrically Loaded Weld Groups 8–113
Table 8-11a. Coefficients, *C*, for Eccentrically Loaded Weld Groups 8–119
Tables 8-12. Approximate Number of Passes for Welds 8–124

SCOPE

The specification requirements and other design considerations summarized in this Part apply to the design of welded joints. For the design of connecting elements, see Part 9. For the design of simple shear, moment, bracing and other connections, see Parts 10 through 15.

GENERAL REQUIREMENTS FOR WELDED JOINTS

The requirements for welded construction are given in AISC *Specification* Section M2.4, which requires the use of AWS D1.1, except as modified in AISC *Specification* Section J2. For further information see also Blodgett et al. (1997).

Welding in structural steel is performed in compliance with written welding procedure specifications (WPS). WPS are qualified by test or prequalified in AWS D1.1. WPS are used to control base metal, consumables, joint geometry, electrical and other essential variables for welded joints.

Consumables

Requirements for welding consumables are given in AISC *Specification* Sections A3.5, J2.6 and J2.7. Permissible filler metal strengths are shown in Table J2.5, based on matching filler metals shown in AWS D1.1 Table 3.1. Filler metal notch-toughness requirements are given in AISC *Specification* Section J2.6. Low-hydrogen electrodes for shielded metal arc welding (SMAW) are required, as shown in AWS D1.1 Table 3.1. Low-hydrogen SMAW electrodes have a limited exposure time and rod ovens are necessary near the point of use for storage.

Requirements for the manufacture, classification and packing of consumables are given in AWS A5.x specifications. Consumables vary based upon their welding process. SMAW, or "stick" welding, is a manual process. Submerged arc welding (SAW) is a semiautomatic or automatic process. Consumables are classified as an electrode flux combination because the weld metal properties are dependant on both the electrode and the flux. SAW is suitable for long straight or circumferential welds but the work must be performed in horizontal or flat positions. Flux-cored arc welding (FCAW) uses wire electrode that contains flux in the center. FCAW electrodes are provided for use with a gas shield or self shield. Gas for shielding is argon, carbon dioxide or a combination of the two. Gas metal arc welding (GMAW) uses wire electrodes that are solid or have a metal core. GMAW is performed with gas shielding.

Thermal Cutting

Oxygen-fuel gas cutting can be used to cut almost any commercially available plate thickness. If the plate being cut contains large discontinuities or nonmetallic inclusions, turbulence may be created in the cutting stream, resulting in notches or gouges in the edge of the cut. Plasma-arc cutting is much faster and less susceptible to the effects of discontinuities or nonmetallic inclusions, but leaves a slight taper in the cut as it descends and can be used only up to about 1½-in. thickness.

Air-Arc Gouging

In this method, a carbon arc is used to melt a nugget-shaped area of the base metal, which is blown away with a jet of compressed air. Air-arc gouging can be used to remove weld

defects, gouge the weld root to sound weld metal, form a U groove on one side of a square butt joint, and for similar operations.

Inspection

The five most commonly used methods for welding inspection are discussed following and in the *Guide for the Nondestructive Examination of Welds* (AWS B1.10) (AWS, 1992). Chapter N of the AISC *Specification* contains requirements for nondestructive examination (NDE) of welds. The general contractor or owner must arrange for this. This work must be scheduled to minimize interruption of the fabricator and erector. See AISC *Specification* Section N5.2.The designer may specify in the contract documents the types of weld inspection required as well as the extent and application of each type of inspection differing from the requirements of Chapter N. In the absence of instructions for weld inspection, the fabricator or erector is only responsible for those weld discontinuities found by visual inspection (see AWS D1.1). Welds may have defects that cannot be rejected based on AWS criteria. Stipulation of various NDE methods has the effect of selecting acceptance criteria and therefore has a related effect on costs. Weld repairs which may be difficult to perform and which may potentially damage other aspects of the connection are best referred to the engineer of record to determine the necessity of the correction with due consideration of fitness for purpose.

Visual inspection is the most commonly required inspection process. The designer must realize that more stringent requirements for inspection can needlessly add significant cost to the project and should specify them only in those instances where they are essential to the integrity of the structure.

Visual Testing (VT)

Visual inspection provides the most economical way to check weld quality and is the most commonly used method. Joints are scrutinized prior to the commencement of welding to check fit-up, preparation bevels, gaps, alignment and other variables. After the joint is welded, it is then visually inspected in accordance with AWS D1.1. If a discontinuity is suspected, the weld is either repaired or other inspection methods are used to validate the integrity of the weld. In most cases, timely visual inspection by an experienced inspector is sufficient and offers the most practical and effective inspection alternative to other, more costly methods.

Penetrant Testing (PT)

This test uses a red dye penetrant applied to the work from a pressure spray can. The dye penetrates any crack or crevice open to the surface. Excess dye is removed and white developer is sprayed on. Dye seeps out of the crack, producing a red image on the white developer (See Figure 8-1).

Penetrant testing (PT) can be used to detect tight cracks as long as they are open to the surface. However, only surface cracks are detectable. Furthermore, deep weld ripples and scratches may give a false indication when PT is used.

Dye penetrant examination tends to be messy and slow, but can be helpful when determining the extent of a defect found by visual inspection. This is especially true when a defect is being removed by gouging or grinding for the repair of a weld to assure that the defect is completely removed.

Magnetic-Particle Testing (MT)

A magnetizing current is introduced with a yoke or contact prods into the weldment to be inspected, as sketched in Figure 8-2 (prods shown). This induces a magnetic field in the work, which will be distorted by any cracks, seams, inclusions, etc. located on or near (within approximately 0.1 in. of) the surface. A dry magnetic powder blown lightly on the surface by a rubber squirt bulb will be picked up at such discontinuities making a distinct mark. The magnetically held particles show the location, size, and shape of the discontinuity.

The method will indicate surface cracks that might be difficult for liquid penetrant to enter and subsurface cracks to about 0.1-in. depth, with proper magnetization. Records may be kept by picking up the powder pattern with clear plastic tape. Cleanup is easy, but demagnetizing, if necessary, may not be. If the magnetizing prod is lifted from the work while the current is still on, an arc strike which could lead to cracking could result. If arc strikes occur, they should be ground out.

Magnetic particle examination can be useful when a defect is suspected from visual inspection or when the absence of cracking in areas of high restraint must be confirmed. Relatively smooth surfaces are required for MT and it is reasonably economical. Where delayed cracking is suspected, the nondestructive examination may have to be performed after a cooling time—typically 48 hours.

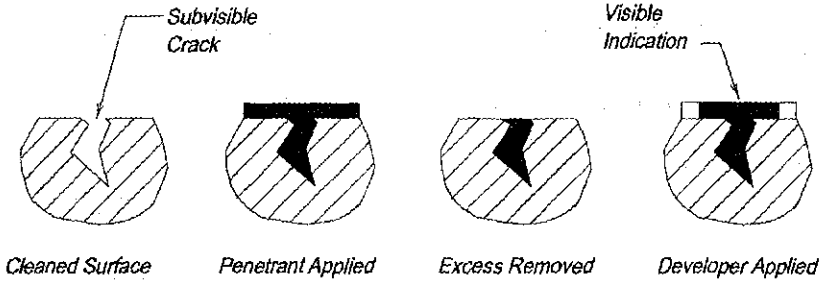

Fig. 8-1. Schematic illustration of penetrant testing (PT).

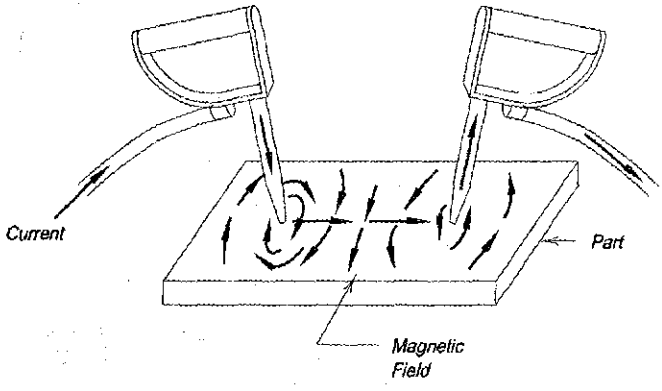

Fig. 8-2. Schematic illustration of magnetic particle testing (MT).

Ultrasonic Testing (UT)

The ultrasonic inspection process is analogous to sonar. A short pulse of high-frequency sound is broadcast from a crystal into a metal, after which the crystal waits to receive reflections from the far end of the metal member and from any voids encountered on the way through. The technique is called pulse echo. The sound beam is produced by a piezoelectric transducer energized by an electric current which causes the crystal to vibrate and transmit through a liquid couplant into the metal. Any reflections are displayed as pips on a cathode ray tube (CRT) grid whose horizontal scale represents distance through the metal. The vertical scale represents the strength (or area) of the reflecting surface. The system is shown schematically in Figure 8-3.

The accuracy of ultrasonic inspection is highly dependent upon the skill and training of the operator and frequent calibration of the instrument. There is a "dead" area beneath most transducers that makes it difficult to inspect members less than $^5/_{16}$ in. in thickness. Austenitic stainless steels and extremely coarse-grained steels, e.g., electroslag welds, are difficult to inspect; but on structural carbon and low-alloy steels, the process can detect flat discontinuities (favorably oriented for reflection) smaller than $^1/_{64}$ in. The crystal, which is $^3/_8$ in. to 1 in. in size, can be readily moved about to check many orientations and can project the beam into the metal at angles of 90°, 70°, 60° and 45°. With the latter three angles,

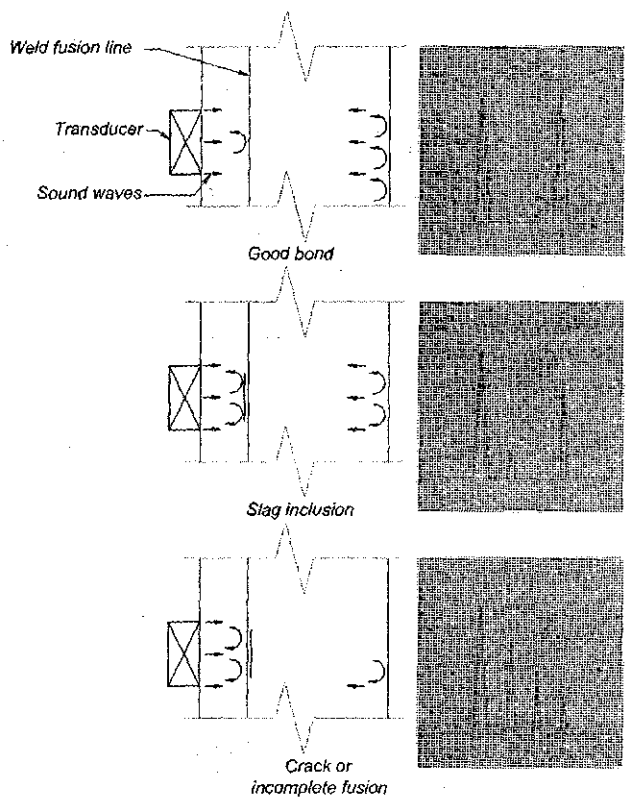

Fig. 8-3. Variations in UT reflections caused by defects at the boundary.

the beam can be bounced around inside the metal, producing echoes from any discontinuity on the way. For more information see Krautkramer (1990) and Institute of Welding (1972).

Ultrasonic testing (UT) is a more versatile, rapid and economical inspection method than radiography, but it does not provide a permanent record like the X-ray negative. The operator, instead, makes a written record of discontinuity indications appearing on his CRT. Certain joint geometry limits the use of the ultrasonic method.

Ultrasonic examination has limited applicability in some applications, such as HSS fabrication. Relatively thin sections and variations in joint geometry can lead to difficulties in interpreting the signals, although technicians with specific experience on weldments similar to those to be examined may be able to decipher UT readings in some instances. Similarly, UT is usually not suitable for use with fillet welds and smaller partial-joint-penetration (PJP) groove welds. Complete-joint-penetration (CJP) groove welds with and without backing bars also give readings that are subject to differing interpretations. Ultrasonic examination may be specified to validate the integrity of CJP groove welds that are subject to tension. Ultrasonic examination has largely replaced radiographic examination for the inspection of critical CJP groove welds in building construction. New technology called phased array is in development and in use in some applications. Phased array is a computer controlled ultrasonic examination capable of providing an informative display. AWSD1.1 provisions for acceptance criteria have not been adopted for this method at this time.

Radiographic Testing (RT)

Radiographic testing (RT) is basically an X-ray film process. To be detected by radiography, a crack must be oriented roughly parallel to the impinging radiation beam, and occupy about 1½% of the metal thickness along that beam. There are problems with radiographs of fillets, tee and corner joints, however, because the radiation beam must penetrate varying thicknesses.

Precautions for avoiding radiation hazards interfere with shop work, and equipment and film costs make it the most expensive inspection method. Ultrasonic systems have gradually supplemented and even supplanted radiography.

Radiographic examination has very limited applicability in some applications, such as for HSS fabrication, because of the irregular shape of common joints and the resulting variations in thickness of material as projected onto film. RT can be used successfully for butt splices, but can only provide limited information about the condition of fusion at backing bars near the root corners. The general inability to place either the radiation source or the film inside the HSS means that exposures must usually be taken through both the front and back faces of the section with the film attached to the outside of the back face. Several such shots progressing around the member are needed to examine the complete joint.

PROPER SPECIFICATION OF JOINT TYPE

Selection of Weld Type

The most common weld types are fillet and groove welds. Fillet welds are normally more economical than groove welds and generally should be used in applications for which groove welds are not required. Additionally, fillet welds around the inside of holes or slots require less weld metal than plug or slot welds of the same size, even though the diameters of holes and widths of slots for fillet welds must be larger to accommodate the necessary tilt of the electrode.

PJP groove welds are more economical than CJP groove welds. When groove welds are required, bevel and V groove welds, which can be flame-cut, are usually more economical than J and U groove welds, which must be air-arc gouged or planed. Also, double-bevel, double-V, double-J, and double-U welds are typically more economical than welds of the same type with single-sided preparation because they use less weld metal, particularly as the thickness of the connection element(s) being welded increases. The symmetry also results in less rotational distortion strain. However, in thinner connection elements, the savings in weld-metal volume may not offset the additional cost of double edge preparation, weld-root cleaning, and repositioning. As a general rule of thumb, double-sided joint preparation is normally less expensive than single-sided preparation above 1-in. thickness.

Weld Symbols

For guidance on the proper use of weld symbols, refer to Table 8-2. More extensive information on weld symbols may be found in AWS A2.4, *Standard Symbols for Welding, Brazing, and Nondestructive Examination* (AWS, 2007).

Available Strength

The available strength of a welded joint is determined in accordance with AISC *Specification* Section J2.4 and Table J2.5. The calculation of the available strength of a longitudinally loaded fillet weld can be simplified from that given in AISC *Specification* Table J2.5. For a fillet weld less than or equal to 100 times the weld size in length, the available shear strength, ϕR_n or R_n/Ω, may be calculated as follows:

$$R_n = 0.60F_{EXX}\left(\frac{\sqrt{2}}{2}\right)\left(\frac{D}{16}\right)l \qquad (8\text{-}1)$$

$$\phi = 0.75 \qquad \Omega = 2.00$$

where

l = length, in.

D = weld size in sixteenths of an inch

For F_{EXX} = 70 ksi:

LRFD		ASD	
$\phi R_n = 1.392Dl$	(8-2a)	$\frac{R_n}{\Omega} = 0.928Dl$	(8-2b)

When the fillet weld is not longitudinally loaded, the alternative provisions in AISC *Specification* Section J2.4(a) may be used to take advantage of the increased strength due to load angle. The maximum strength increase will be for a transversely loaded fillet weld, which is 50% stronger than the same fillet weld longitudinally loaded.

Effect of Load Angle

When designing fillet welds, the increased strength due to loading angle may be accounted for by multiplying the available strength of the weld by the following expression, as given in AISC *Specification* Equation J2-5:

$$(1.0 + 0.50\sin^{1.5}\theta)$$

where

θ = angle of loading measured from the weld longitudinal axis, degrees

For transversely loaded welds, $\theta = 90°$. This accounts for a 50% increase in weld strength over a longitudinally loaded weld. However, this increased weld strength is accompanied by a decrease in ductility. For a single line weld, the decreased ductility is inconsequential for most applications. However, for weld groups composed of welds loaded at various angles, this change in ductility means that the designer must consider load-deformation compatibility.

CONCENTRICALLY LOADED WELD GROUPS

The load-deformation curves shown in Figure 8-5 highlight the need for consideration of deformation compatibility, since the transversely loaded weld will fracture before the longitudinally loaded weld obtains its full strength.

A simplified procedure for determining the available strength of concentrically loaded fillet weld groups is discussed later in Part 8 using Table 8-1. In lieu of using this procedure, it is permitted to sum the capacities of individual weld elements, neglecting load-deformation compatibility, when no increase in strength due to the loading angle is assumed.

ECCENTRICALLY LOADED WELD GROUPS

Eccentricity in the Plane of the Faying Surface

Eccentricity in the plane of the faying surface produces additional shear. The welds must be designed to resist the combined effect of the direct shear, P_u or P_a, and the additional shear from the induced moment, $P_u e$ or $P_a e$. Two methods of analysis for this type of eccentricity are the instantaneous center of rotation method and the elastic method.

The instantaneous center of rotation method is more accurate, but generally requires the use of tabulated values or an iterative solution. The elastic method is simplified, but may be excessively conservative because it neglects the ductility of the weld group and the potential load increase.

Instantaneous Center of Rotation Method

Eccentricity produces both a rotation and a translation of one connection element with respect to the other. The combined effect of this rotation and translation is equivalent to a rotation about a point defined as the instantaneous center of rotation (IC) as illustrated in Figure 8-4(a). The location of the IC depends upon the geometry of the weld group as well as the direction and point of application of the load.

The load deformation relationship for a unit length segment of the weld, as illustrated in Figure 8-5, is an approximation of the equation by Lesik and Kennedy (1990). The nominal shear strength of the weld element, F_{nwi}, is limited by the deformation, Δ_{ui}, of the weld segment that first reaches its limit, where

$$F_{nwi} = 0.60F_{EXX}(1.0 + 0.50 \sin^{1.5}\theta_i)\ [p_i(1.9 - 0.9p_i)]^{0.3} \qquad (8\text{-}3)$$

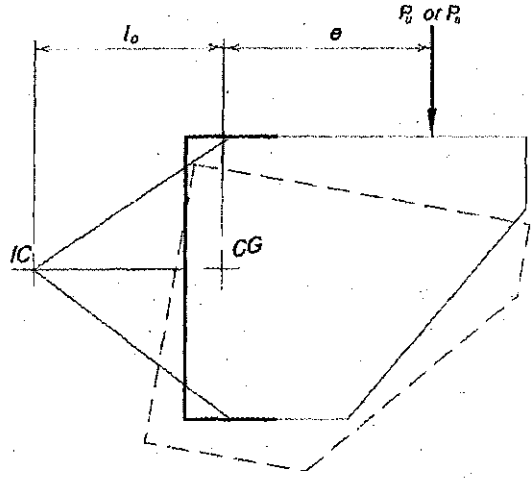

(a) Instantaneous center of rotation (IC)

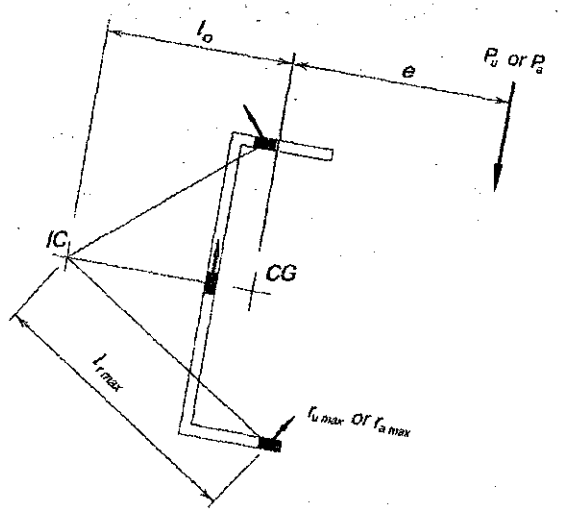

(b) Forces on weld elements

Fig. 8-4. Instantaneous center of rotation method.

where

F_{nwi} = nominal shear strength of the weld segment at a deformation, Δ, ksi

F_{EXX} = weld electrode strength, ksi

θ_i = load angle measured relative to the weld longitudinal axis, degrees

p_i = ratio of element deformation, Δ_i, to its deformation at the maximum stress, Δ_{mi}

Δ_i = deformation of the element taken as the critical deformation, Δ_{ucr}, proportioned by the ratio of the IC to element distance to the IC to critical element distance, in.

Δ_{ucr} = ultimate deformation of the critical element, Δ_{ui}, of the element with the minimum Δ_{ui}/(IC to element distance), in.

$\Delta_{ui} = 1.087w(\theta_i + 6)^{-0.65} \le 0.17w$, in. (8-4)

w = weld leg size, in.

Unlike the load-deformation relationship for bolts, the strength deformation of welds is dependent upon the angle, θ_i, that the resultant elemental force makes with the axis of the weld element. Load-deformation curves in Figure 8-5 for values of weld element shear strength, P_i, relative to $P_o = 0.60F_{EXX}$ for values of $\theta_i = 0°$, 15°, 30°, 45°, 60°, 75° and 90° are shown. For further information, see AISC *Specification* Section J2.4 and its commentary.

The nominal strengths of the other unit-length weld segments in the joint can be determined by applying a deformation, Δ, that varies linearly with the distance from the IC. The nominal shear strength of the weld group is, then, the sum of the individual strengths of all weld segments. Because of the nonlinear nature of the requisite iterative solution, for sufficient accuracy, a minimum of 20 weld elements for the longest line segment is generally recommended.

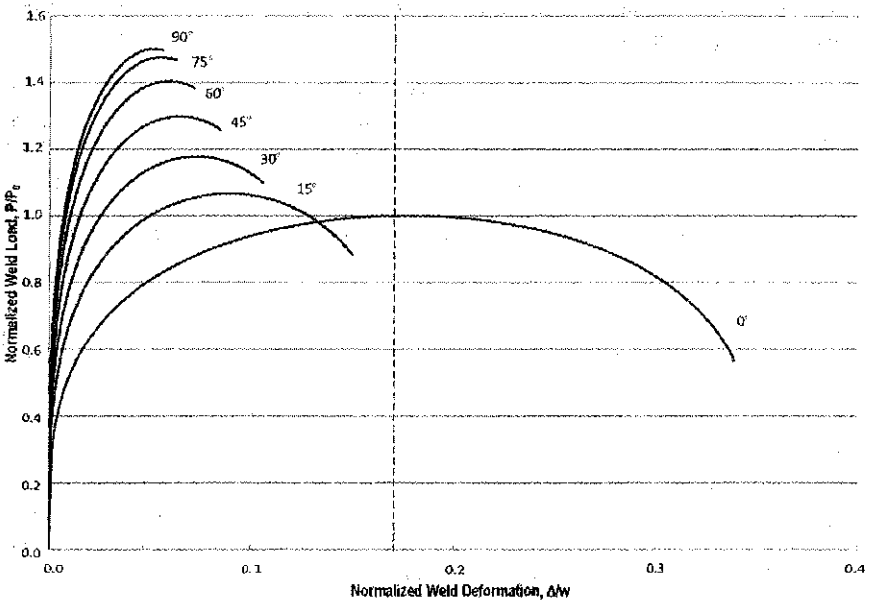

Fig. 8-5. Fillet weld strength as a function of load angle, θ.

The individual resistance of each weld segment is assumed to act on a line perpendicular to a ray passing through the IC and the centroid of that weld segment, as illustrated in Figure 8-4(b). If the correct location of the instantaneous center has been selected, the three equations of in-plane static equilibrium, $\Sigma F_x A_{wei} = 0$, $\Sigma F_y A_{wei} = 0$, and $\Sigma M = 0$, will be satisfied, where A_{wei} is the effective weld area.

For further information, see Crawford and Kulak (1968) and Butler et al. (1972).

Elastic Method

For a force applied as illustrated in Figure 8-4, the eccentric force, P_u or P_a, is resolved into a force, P_u or P_a, acting through the center of gravity (CG) of the weld group and a moment, $P_u e$ or $P_a e$, where e is the eccentricity. Each weld element is then assumed to resist an equal share of the direct shear, P_u or P_a, and a share of the eccentric moment, $P_u e$ or $P_a e$, proportional to its distance from the CG. The resultant vectorial sum of these forces, r_u or r_a, is the required strength for the weld.

The shear per linear inch of weld due to the concentric force, r_{pu} or r_{pa}, is determined as

LRFD		ASD	
$r_{pu} = \frac{P_u}{l}$	(8-5a)	$r_{pa} = \frac{P_a}{l}$	(8-5b)

where

l = total length of the weld in the weld group, in.

To determine the resultant shear per linear inch of weld, r_{pu} or r_{pa} must be resolved into horizontal components, r_{pux} or r_{pax}, and vertical components, r_{puy} or r_{pay}, where

$$r_{pux} = r_{pu}\sin\theta \text{ (LRFD)} \quad (8\text{-}6a)$$
$$r_{pax} = r_{pa}\sin\theta \text{ (ASD)} \quad (8\text{-}6b)$$
$$r_{puy} = r_{pu}\cos\theta \text{ (LRFD)} \quad (8\text{-}7a)$$
$$r_{pay} = r_{pa}\cos\theta \text{ (ASD)} \quad (8\text{-}7b)$$

The shear per linear inch of weld due to the moment, $P_u e$ or $P_a e$, is r_{mu} or r_{ma}, where

LRFD		ASD	
$r_{mu} = \frac{P_u e c}{I_p}$	(8-8a)	$r_{ma} = \frac{P_a e c}{I_p}$	(8-8b)

where

c = radial distance from CG to point in weld group most remote from CG, in.

$I_p = I_x + I_y$ = polar moment of inertia of the weld group, in.^{4} per in. Refer to Figure 8-6. For section moduli and torsional constants of various welds treated as line elements, refer to Table 5 in Section 7 of Blodgett (1966).

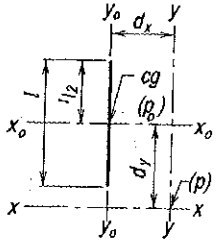

$$I_{xo} = \frac{l^3}{12}$$
$$I_x = \frac{l^3}{12} + l(d_y)^2$$
$$I_{yo} = 0$$
$$I_y = l(d_x)^2$$

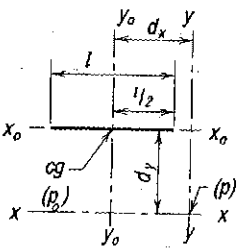

$$I_{xo} = 0$$
$$I_x = l(d_y)^2$$
$$I_{yo} = \frac{l^3}{12}$$
$$I_y = \frac{l^3}{12} + l(d_x)^2$$

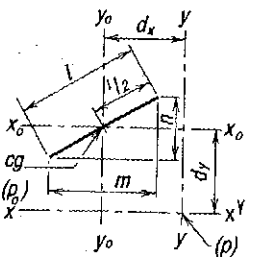

$$I_{xo} = \frac{lm^2}{12}$$
$$I_x = \frac{lm^2}{12} + l(d_y)^2$$
$$I_{yo} = \frac{lm^2}{12}$$
$$I_y = \frac{lm^2}{12} + l(d_x)^2$$

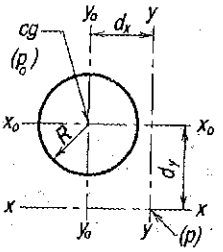

$l = 6.283R$

$$I_{xo} = \pi R^3$$
$$I_x = \pi R^3 + l(d_y)^2$$
$$I_{yo} = \pi R^3$$
$$I_y = \pi R^3 + l(d_x)^2$$

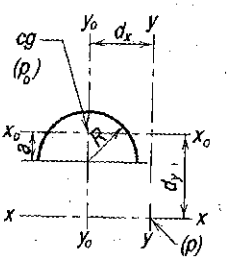

$a = 0.637R$
$l = 3.14R$

$$I_{yo} = \frac{\pi}{2} R^3$$
$$I_y = \frac{\pi}{2} R^3 + l(d_x)^2$$
$$I_{xo} = \left(\frac{\pi}{2} - \frac{4}{\pi}\right) R^3$$
$$I_x = \left(\frac{\pi}{2} - \frac{4}{\pi}\right) R^3 + l(d_y)^2$$

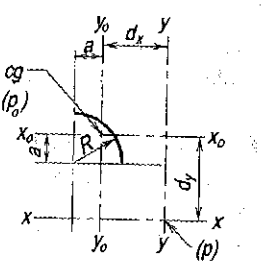

$a = 0.637R$
$l = 1.57R$

$$I_{xo} = \left(\frac{\pi}{4} - \frac{2}{\pi}\right) R^3$$
$$I_x = \left(\frac{\pi}{4} - \frac{2}{\pi}\right) R^3 + l\left(d_y\right)^2$$
$$I_{yo} = \left(\frac{\pi}{4} - \frac{2}{\pi}\right) R^3$$
$$I_y = \left(\frac{\pi}{4} - \frac{2}{\pi}\right) R^3 + l\left(d_x\right)^2$$

Fig. 8-6. Moments of inertia of various weld segments.

To determine the resultant force on the most highly stressed weld element, r_{mu} or r_{ma} must be resolved into horizontal component r_{mux} or r_{max} and vertical component r_{muy} or r_{may}, where

LRFD		ASD	
$r_{mux} = \dfrac{P_u e c_y}{I_p}$	(8-9a)	$r_{max} = \dfrac{P_a e c_y}{I_p}$	(8-9b)
$r_{muy} = \dfrac{P_u e c_x}{I_p}$	(8-10a)	$r_{may} = \dfrac{P_a e c_x}{I_p}$	(8-10b)

In the above equations, c_x and c_y are the horizontal and vertical components of the radial distance c at the point where r_u or r_a is a maximum. The point in the weld group where the stress is highest will usually be at a corner, or a termination, or where the element is farthest from the center of gravity. Thus, the resultant force, r_u or r_a, is determined as

LRFD		ASD	
$r_u = \sqrt{\left(r_{pux} + r_{mux}\right)^2 + \left(r_{puy} + r_{muy}\right)^2}$	(8-11a)	$r_a = \sqrt{\left(r_{pax} + r_{max}\right)^2 + \left(r_{pay} + r_{may}\right)^2}$	(8-11b)

which should be compared against the available strength, found in AISC *Specification* Table J2.5. For further information, see Higgins (1971).

Eccentricity Normal to the Plane of the Faying Surface

Eccentricity normal to the plane of the faying surface produces tension above and compression below the neutral axis, as illustrated in Figure 8-7 for a bracket connection. The eccentric force, P_u or P_a, is resolved into a direct shear, P_u or P_a, acting at the faying surface

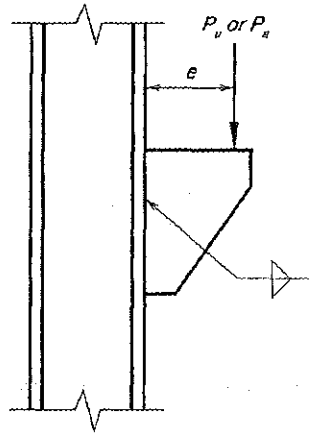

Fig. 8-7. Welds subject to eccentricity normal to the plane of the faying surface.

of the joint and a moment normal to the plane of the faying surface, $P_u e$ or $P_a e$, where e is the eccentricity. Each unit-length segment of weld is then assumed to resist an equal share of the concentric force, P_u or P_a, and the moment is resisted by tension in the welds above the neutral axis and compression below the neutral axis.

In contrast to bolts, where the interaction of shear and tension must be considered, for welds, shear and tension can be combined vectorially into a resultant shear. Thus, the solution of a weld loaded eccentrically normal to the plane of the faying surface is similar to that discussed previously for welds loaded eccentrically in the plane of the faying surface.

OTHER SPECIFICATION REQUIREMENTS AND DESIGN CONSIDERATIONS

The following other specification requirements and design considerations apply to the design of welded joints.

Special Requirements for Heavy Shapes and Plates

For CJP groove welded joints in heavy shapes with a flange thickness exceeding 2 in. or built-up sections consisting of plates with a thickness exceeding 2 in., see AISC *Specification* Sections A3.1c and Section A3.1d.

Placement of Weld Groups

For the required placement of weld groups at the ends of axially loaded members, see AISC *Specification* Section J1.7.

Welds in Combination with Bolts or Rivets

For welds used in combination with bolts or rivets, see AISC *Specification* Section J1.8.

Fatigue

For applications involving fatigue, see AISC *Specification* Appendix 3.

One-Sided Fillet Welds

When lateral deformation is not otherwise prevented, a severe notch can result at locations of one-sided welds. For the fillet-welded joint illustrated in Figure 8-8, the unwelded side has no strength in tension and a notch may form from the unwelded side. Using one fillet weld on each side will eliminate this condition. This is also true with PJP groove welds.

Welding Considerations and Appurtenances

Clearance Requirements

Clearances are required to allow the welder to make proper welds. Ample room must be provided so that the welder or welding operator may manipulate the electrode and observe the weld as it is being deposited.

In the SMAW process, the preferred position of the electrode when welding in the horizontal position is in a plane forming 30° with the vertical side of the fillet weld being made. However, this angle, shown as angle x in Figure 8-9, may be varied somewhat to avoid

contact with some projecting part of the work. A simple rule to provide adequate clearance for the electrode in horizontal fillet welding is that the clear distance to a projecting element should be at least one-half the distance y in Figure 8-9(b).

A special case of minimum clearance for welding with a straight electrode is illustrated in Figure 8-10. The 20° angle is the minimum that will allow satisfactory welding along the bottom of the angle and therefore governs the setback with respect to the end of the beam. If a $\frac{1}{2}$-in. setback and $\frac{3}{8}$-in. electrode diameter were used, the clearance between the angle and the beam flange could be no less than $1\frac{1}{4}$ in. for an angle with a leg dimension, w, of 3 in., nor less than $1\frac{5}{8}$ in. with a w of 4 in. When it is not possible to provide

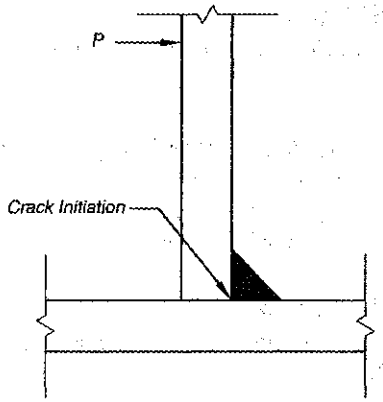

Fig. 8-8. Notch effect at one-sided weld.

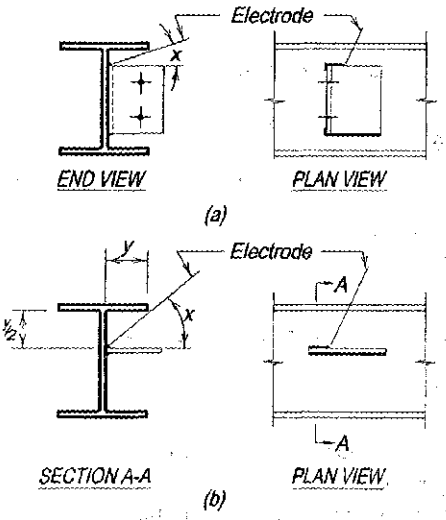

Fig. 8-9. Clearances for SMAW welding.

this clearance, the end of the angle may be cut as noted by the optional cut in Figure 8-10 to allow the necessary angle. However, this secondary cut will increase the cost of fabricating the connection.

Excessive Welding

The specification of over or excessive welding will increase the amount of heat input into the parts joined and thereby add to distortion in the joint. Distortion of the joint is caused by three fundamental dimensional changes that occur during and after welding:

1. Transverse shrinkage that occurs perpendicular to the weld line,
2. Longitudinal shrinkage that occurs parallel to the weld line, and
3. Angular change that consists of rotation around the weld line.

If these dimensional changes alter the joint so that it is no longer within fabrication tolerances, the joint may need to be repaired with additional heating to bring the joint back to within fabrication tolerances. This added work will result in expensive repair costs which could have been avoided with appropriately sized welds.

Over-specification of weld size also increases the cost of welding for no structural benefit.

Minimum Shelf Dimensions for Fillet Welds

The recommended minimum shelf dimensions for normal size SMAW fillet welds are summarized in Figure 8-11. SAW fillet welds would require a greater shelf dimension to contain

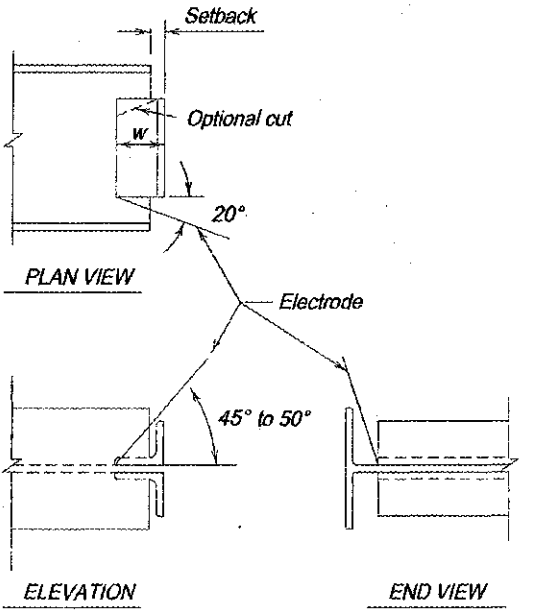

Fig. 8-10. Clearances for SMAW welding.

the flux, although auxiliary material can be clamped to the member to provide for this. The dimension *b* illustrated in Figure 8-12 must be sufficient to accommodate the combined dimensional variations of the angle length, cope depth, beam depth and weld size.

Beam Copes and Weld Access Holes

Requirements for beam copes and weld access holes are given in AISC *Specification* Sections J1.6 and M2.2. Weld access holes, as illustrated in Figure 8-13, are used to permit down-hand welding to the beam bottom flange, as well as the placement of a continuous backing bar under the beam top flange. Weld access holes also help to mitigate the effects of weld shrinkage strains and prevent the intersection or close juncture of welds in orthogonal directions. Weld access holes should not be filled with weld metal because doing so may result in a state of triaxial stress under loading.

Corner Clips

Corners of stiffeners and similar elements that fit into a corner should be clipped generously to avoid the lack of fusion that would likely result in that corner. In general, a 3/4-in. clip will be adequate, although this dimension can be adjusted to suit conditions, such as when the fillet radius is larger or smaller than that for which a 3/4-in. clip is appropriate. For further information, see Butler et al. (1972) and Blodgett (1980).

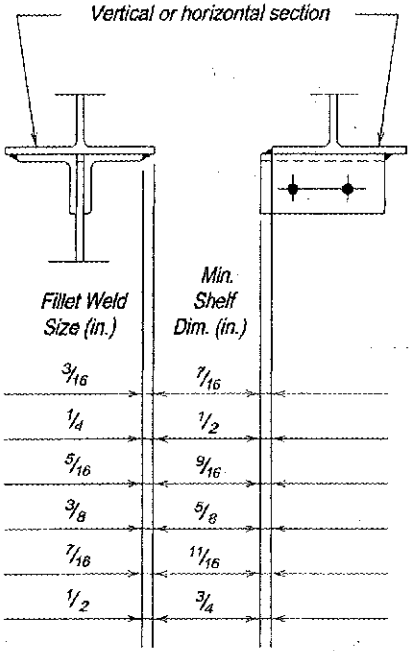

Fig. 8-11. Recommended minimum shelf dimensions for SMAW fillet welds.

Backing Bars

Backing bars, illustrated in Figure 8-13, should be of approved weldable material as specified in AWS D1.1 Section 5.2.2.2. Per AWS D1.1, backing bars on groove-welded joints are usually continuous or fully spliced to avoid stress concentrations or discontinuities and should be thoroughly fused with the weld metal. Backing bar removal is addressed in AISC *Specification* Section J2.6 and AWS D1.1.

Spacer Bars

Spacer bars, illustrated in Figure 8-13, must be of the same material specification as the base metal, per AWS D1.1 Section 5.2.2.3. This can create a procurement problem, since small tonnage requirements may make them difficult to obtain in the specified ASTM designation.

Weld Tabs

To obtain a fully welded cross section, the termination at either end of the joint must be of sound weld metal. Weld-tabs, illustrated in Figure 8-13, should be of approved weldable material as specified in AWS D1.1 Section 5.2.2.1. Two configurations of weld tabs are illustrated in Figure 8-14, including flat-type weld tabs, which are normally used with bevel and V groove welds, and contour-type weld tabs, which are normally used with J and U

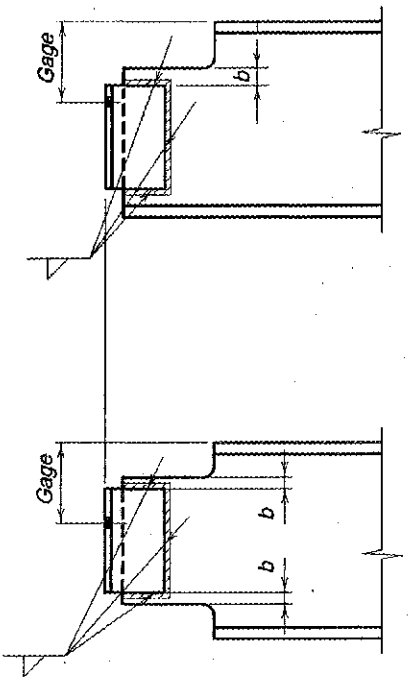

Fig. 8-12. Illustration of shelf dimensions for fillet welding.

groove welds. Weld-tab removal is addressed in AWS D1.1. Frequently, the backing bar can be extended to serve as the weld tab. Some welds performed in the horizontal position require shelf bars. Shelf bars will be left in place unless they are required to be removed by the engineer.

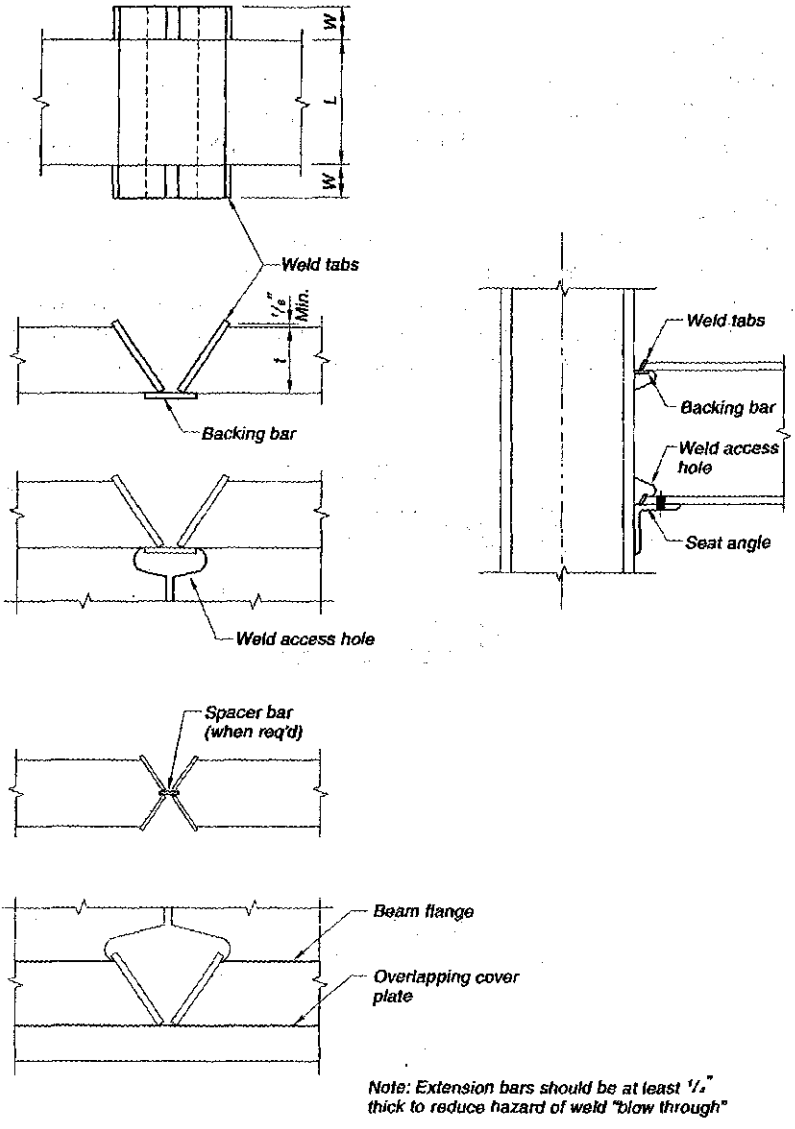

Fig. 8-13. Illustration of backing bars, spacer bars, weld tabs and other fittings for welding.

Tack Welds

Tack welds placed as shown in Figure 8-15(a) should be avoided as they may cause notches. An improved detail is as shown in Figure 8-15(b), with the tack welds placed where they will be consumed in the final welded joint.

Lamellar Tearing

Figures 8-16 and 8-17 illustrate preferred welded joint selection and connection configurations for avoiding susceptibility to lamellar tearing. Refer to the discussion "Avoiding Lamellar Tearing" in Part 2.

Prior Qualification of Welding Procedures

Evidence of prior qualification of welding procedures, welders, welding operators or tackers may be accepted at the discretion of the owner's designated representative for design,

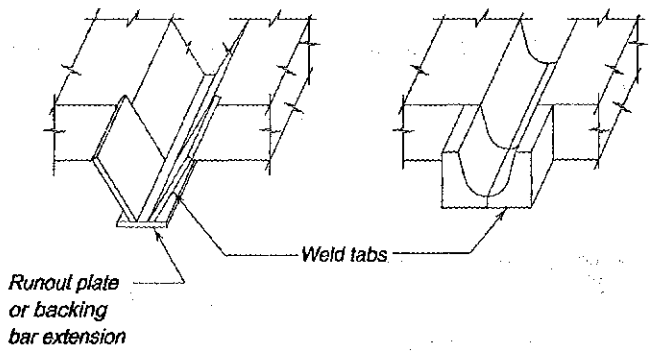

Fig. 8-14. Illustration of weld tabs.

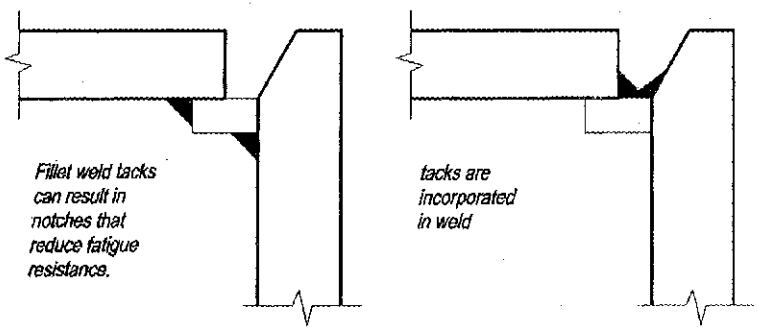

(a) Susceptible Detail *(b) Improved Detail*

Fig. 8-15. Backing bar tack welding.

resulting in significant cost savings. Fabricators that participate in the AISC Quality Certification Program have the experience and documentation necessary to assure that such prior qualifications could be accepted. For more information about the AISC Quality Certification Program, visit www.aisc.org.

Painting Welded Connections

Paint is normally omitted in areas to be field-welded, per AISC *Specification* Section M3.5. Note that this requirement does not generally apply to shop-assembled connections, because painting is normally done after the welds are made. When required, the small paint-free

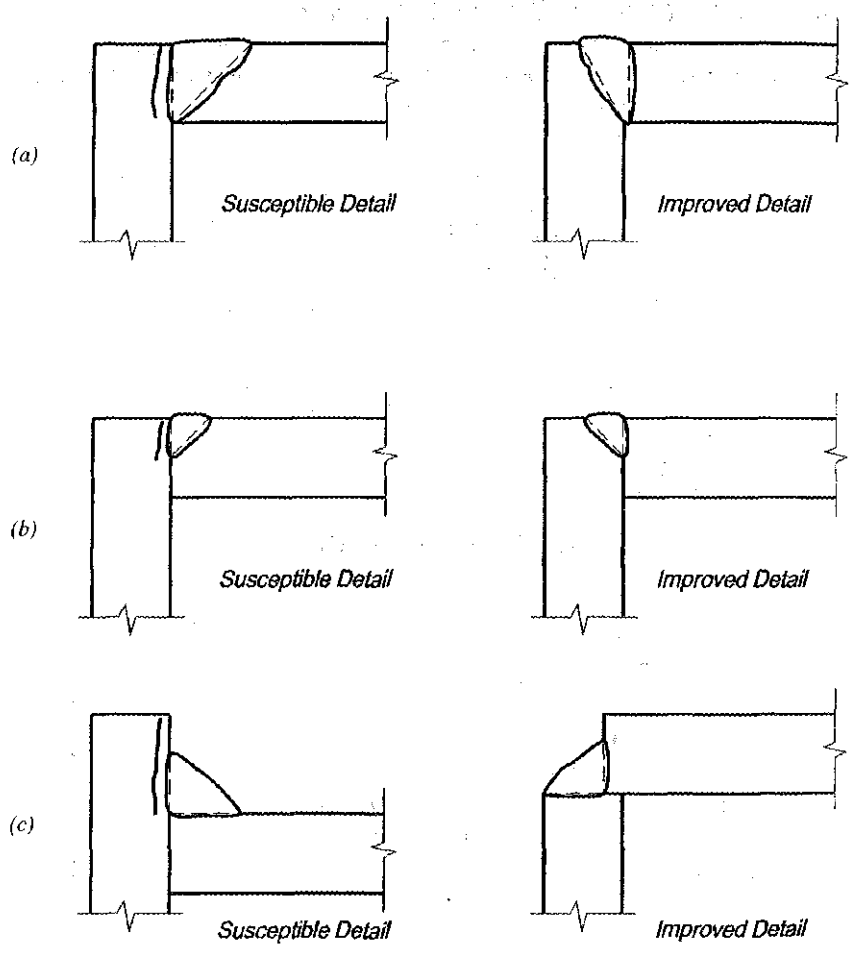

Fig. 8-16. Susceptible and improved details to reduce the incidence of lamellar tearing.

areas can generally be identified with a general note (e.g., "no paint on OSL of connection angles," where OSL stands for outstanding leg).

WELDING CONSIDERATIONS FOR HSS

Flare welds are more common in HSS because of the increasing likelihood that the HSS corner is a part of the welded joint. A common flare bevel configuration which occurs when equal width sections are joined is illustrated in Figure 8-18. The easiest arrangement for welding occurs with equal wall thickness sections. However, when the corner radius increases due to wall thickness or manufacturing tolerances, the root gap may need to be adjusted by profile shaping, building out with weld metal, or by use of backing. See Figures 8-18 and 8-19.

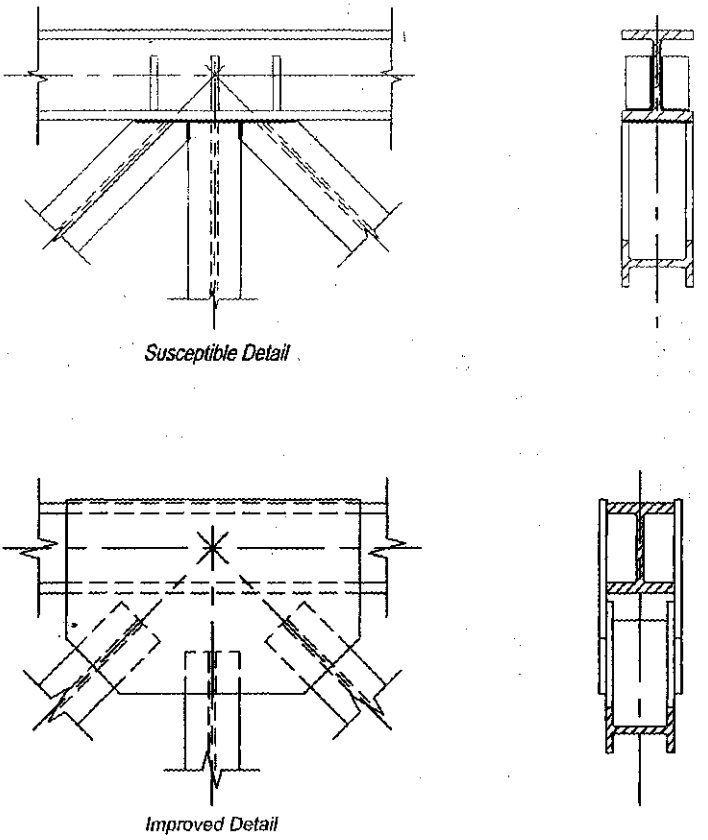

Fig. 8-17. Susceptible and improved details to avoid intersecting welds with high restraint.

HSS Welding Requirements in AWS D1.1

AWS uses the terminology "tubular" for all hollow members including pipe, hollow structural sections, and fabricated box sections. The following sections in AWS D1.1 apply to welded HSS-to-HSS connections:

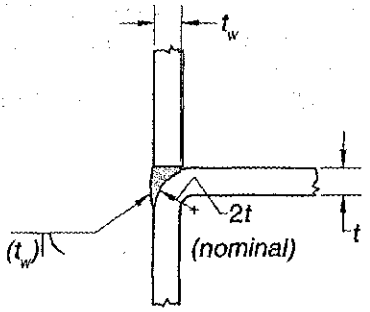

Fig. 8-18. Flare bevel weld, equal width HSS weld joint.

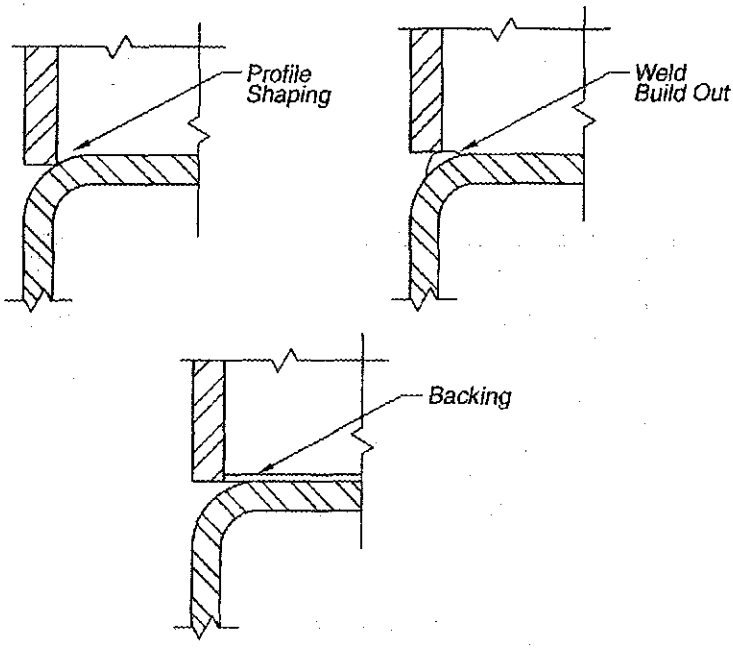

Fig. 8-19. Welding methods accounting for the HSS corner radius.

Clause 2, Part D

As explained in AWS D1.1 Commentary Section C-2.21, "In commonly used types of tubular connections, the weld itself may not be the factor limiting the capacity of the joint. Such limitations as local failure (punching shear), general collapse of the main member, and lamellar tearing are discussed because they are not adequately covered in other codes." Because of these various failure modes, the design of HSS-to-HSS connections must be part of the member sizing process. The members selected must be capable of transmitting the required strength or adequate reinforcement must be shown on the design documents.

Differences in the relative stiffness across HSS walls loaded normal to their surface can make the load transfer highly nonuniform. To prevent progressive failure and to ensure ductile behavior of the joint, minimum welds must be provided in T-, Y- and K-connections to transmit the factored load in the branch or web member. For normal building applications, fillet welds and PJP welds can be used.

While Part D deals primarily with HSS-to-HSS connections, some of these provisions are applicable to welded attachments that deliver a load normal to the wall of a tubular member.

Clause 3

AWS D1.1 Figure 3.2 shows prequalified fillet weld details for tubular joints that differ from details for nontubular skewed T-joints. These details will provide the minimum weld strength needed to ensure ductile joint behavior.

AWS Figure 3.3 shows the joint detail and the effective throat for a flare-bevel and flare-V PJP groove weld that is commonly used for welding connection material to the face of an HSS. Groove welded joint details for HSS are designed to accommodate both the geometry of the section and the lack of access to the back side of the joint.

AWS Figure 3.5 shows various PJP groove welded HSS joint details and AWS Figures 3.6, 3.8, 3.9 and 3.10 show CJP groove welded HSS joint details. The joint preparation and weld sizing are complex and critical to obtain a sound weld. These details also provide the weld strength needed to ensure ductile joint behavior.

Clause 4

AWS D1.1 Clause 4, Qualification, covers the requirements for qualification testing of welding procedure specifications (WPS, see p. 8-3) and performance testing of the welder's ability to produce sound welds. HSS connections may not always meet the requirements for a prequalified WPS because of unique geometry, connection access or for other reasons. This section also gives the requirements for a procedure qualification record (PQR), which is the basis for qualifying a WPS.

The performance testing of welders and welding operators considers process, material thickness, position, nontubular or tubular joint access. AWS D1.1 Tables 4.1 through 4.4 list the required qualifications needed for each type of joint. Most welders are qualified for a particular process and position-in-plate (nontubular) joints. These qualifications will allow the welder to make similar fillet, PJP groove and backed CJP welds in tubular members. However, certain types of tubular connections, such as unbacked T-, Y- and K-connections, require special welder certifications because the lack of access to the back of the joint, the position of the connection, and the access to the connection require special skill to produce a sound connection.

Clause 5

Clause 5, Fabrication, covers the requirements for the preparation, assembly and workmanship of welded steel structures. AWS Table 5.5, Tubular Root Opening Tolerances, gives the acceptable fitup for unbacked groove welds. AWS Table 5.8, Minimum Fillet Weld Size, and Section 2.25.1.3 give the minimum weld pass size based on material thickness and process.

Clause 6

Clause 6, Inspection, contains all of the requirements for the inspector's qualifications and responsibilities, acceptance criteria for discontinuities, and procedures for NDE. AWS D1.1 considers fabrication/erection inspection and testing a separate function from verification inspection and testing. Fabrication/erection inspection and testing is usually the responsibility of the contractor and is performed as appropriate prior to assembly, during assembly, during welding, and after welding to ensure the requirements of the contract documents are met. Verification inspection and testing are the prerogatives of the owner. The extent of NDE and verification inspection must be specified in the contract documents.

The inspection covers WPS qualification, equipment, welder qualification, joint preparation, joint fitup, welding techniques, and weld size length and location. It is especially important when inspecting HSS-to-HSS joints that joint preparation and fitup be checked prior to welding.

In addition to inspecting the above items, AWS requires all welds to be visually inspected for conformance to the standards in AWS Table 6.1, Visual Acceptance Criteria.

Four types of nondestructive testing can be used to supplement visual inspection. They are penetrant testing, magnetic particle testing, radiographic testing, and ultrasonic testing.

The AWS ultrasonic testing (UT) acceptance criteria for non-HSS type groove welds starts at $^5/_{16}$-in.-thick material. The procedures for HSS T-, Y- and K- connections have a minimum applicable thickness of $^1/_2$ in., and diameter of $12^3/_4$ in. AWS does, however, make provision for qualifying UT procedures for smaller size applications. It is possible to UT portions of butt-type splices with backing bars using the non-HSS criteria, however, the corners of rectangular HSS cannot be inspected.

AWS D1.1 makes provision for using alternate acceptance criteria based upon an evaluation of suitability for service using past experience, experimental evidence or engineering analysis. This can be especially important when deciding if and how to make any repairs.

Weld Sizing for Uneven Distribution of Loads

The connection strength for a member welded normal to an HSS wall is a function of the geometric parameters of the connected members and is often less than the full strength of the member. When limited by geometry, the available strength cannot be increased by increasing the weld strength. Due to the varying relative flexibility of the HSS wall loaded normal to its surface and the axial stiffness of the connected member, the transfer of load along the weld line is highly nonuniform. To prevent progressive failure, or "unzipping" of the weld, it is important to provide adequate welds to maintain ductile behavior of the joint.

Welds that satisfy this ductility requirement can be proportioned for the required strength using an effective width criteria similar to that used for checking the axial strength of the

branch member or plate. For effective weld length of HSS-to-HSS connections, refer to AISC *Specification* Section K4.

An alternative to the effective length procedure is the use of the prequalified fillet and PJP groove weld details in AWS D1.1 that are sized to ensure ductile behavior. In addition, fillet welds with an effective throat of 1.1 times the thickness of the branch member can be used. Either of these two alternatives will, in most cases, be conservative.

Detailing Considerations

1. Butt joints will require a groove weld detail. Where possible the joint should be a prequalified PJP groove weld sized for actual load or a CJP groove weld with steel backing.
2. T-, Y- and K-connections should, where possible, use either fillet welds or PJP groove welds sized for the design forces and checked for the minimum size needed to ensure ductile joint behavior. Where CJP welds are required, joint details using steel backing should be used whenever possible. For a detailed discussion of various types of backing and the advantages of using backing, see Post (1990).

DESIGN TABLE DISCUSSION

Table 8-1. Coefficients, *C*, for Concentrically Loaded Weld Group Elements

Concentrically loaded fillet weld groups must consider the effect of loading angle and deformation compatibility on weld strength.

By multiplying the appropriate values of C from Table 8-1 by the available strength of each weld element, an effective strength is determined for each weld element. The available strength of the weld group can be determined by summing the effective strengths of all of the elements in a weld group. It should be noted that this table is to be entered at the largest load angle on any weld in the weld group. For the weld group shown in Figure 8-20, this is calculated as:

LRFD	ASD
$\phi R_w = 1.392D \times [1.5(1)+1.29(1.41)+0.825(1)]$ (8-12a) $= 5.77D$	$R_w/\Omega = 0.928D \times [1.5(1)+1.29(1.41)+0.825(1)]$ (8-12b) $= 3.85D$

Table 8-2. Prequalified Welded Joints

The prequalified welded joints details given in AWS D1.1 and Table 8-2 provide joint geometries, such as root openings, angles and clearances (see Figures 8-21 and 8-22) that will permit the deposition of sound weld material. Prequalified welded joints are not, in themselves, adequate consideration of welded design details and the other provisions in AWS D1.1 must be satisfied as they are referenced in AISC *Specification* Section J2. The design and detailing for successful welded construction requires consideration of factors which include, but are not limited to, the magnitude, type and distribution of forces to be

transmitted, access, restraint against weld shrinkage, thickness of connected materials, residual stress, and distortion. AWS D1.1 has provisions for material that is thinner than is normally considered applicable for structural applications. See AWS D1.1 and D1.3 for welding requirements and limits applicable to these materials in lieu of provisions such as AISC *Specification* Table J2.3.

The designations such as B-L1a, B-U2 and B-P3 are those used in AWS D1.1. Note that lowercase letters (e.g., a, b, c, etc.) are often used to differentiate between joints that would otherwise have the same joint designation. These prequalified welded joints are limited to those made by the SMAW, SAW, GMAW (except short circuit transfer), and FCAW procedures. Small deviations from dimensions, angles of grooves, and variation in depth of groove joints are permissible within the tolerances given.

In general, all fillet welds are prequalified, provided they conform to the requirements in AWS D1.1. Groove welds are classified using the conventions indicated in the tables. Welded joints other than those prequalified by AWS may be qualified, provided they are tested and qualified in accordance with AWS D1.1.

Table 8-3. Electrode Strength Coefficient, C_1

Electrode strength coefficients, C_1, which can be used to adjust the tabulated values of Tables 8-4 through 8-11 for electrodes other than E70XX, are given in Table 8-3. Note that this coefficient includes an additional reduction factor of 0.90 for E80 and E90 electrodes and 0.85 for E100 and E110; this accounts for the uncertainty of extrapolation to these higher-strength electrodes.

Tables 8-4 through 8-11. Coefficients, C, for Eccentrically Loaded Weld Groups

Tables 8-4 through 8-11 employ the instantaneous center of rotation method in accordance with AISC *Specification* Section J2.4 for the weld patterns and eccentric conditions indicated and inclined loads at 0°, 15°, 30°, 45°, 60° and 75°. The tabulated nondimensional coefficient, C, represents the effective strength of the weld group in resisting the eccentric shear force.

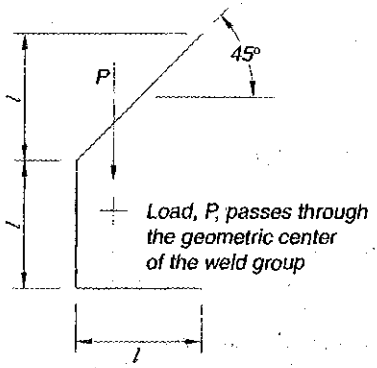

Fig. 8-20. Concentrically loaded weld group.

When Analyzing a Known Weld Group Geometry

For any of the weld group geometries shown, the available strength, ϕR_n or R_n/Ω, of the eccentrically loaded weld group is determined by

$$R_n = CC_1Dl \tag{8-13}$$

$$\phi = 0.75 \qquad \Omega = 2.00$$

where

C = tabular value
C_1 = electrode coefficient from Table 8-3
D = number of sixteenths-of-an-inch in the weld size
l = length of the reference weld, in.

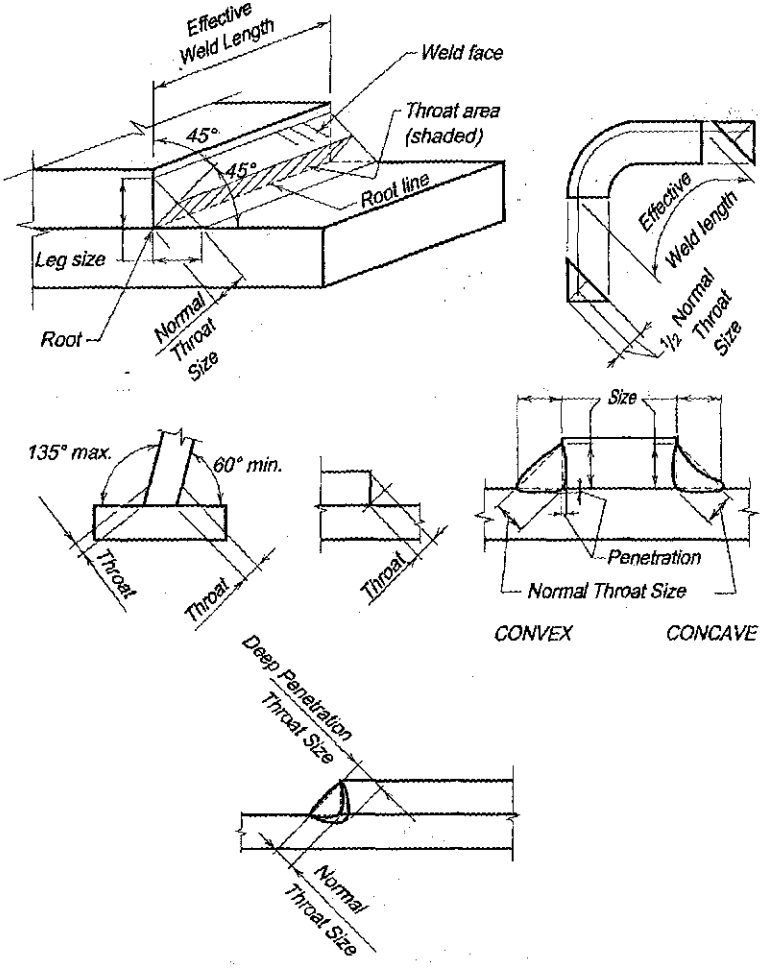

Fig. 8-21. Fillet weld nomenclature.

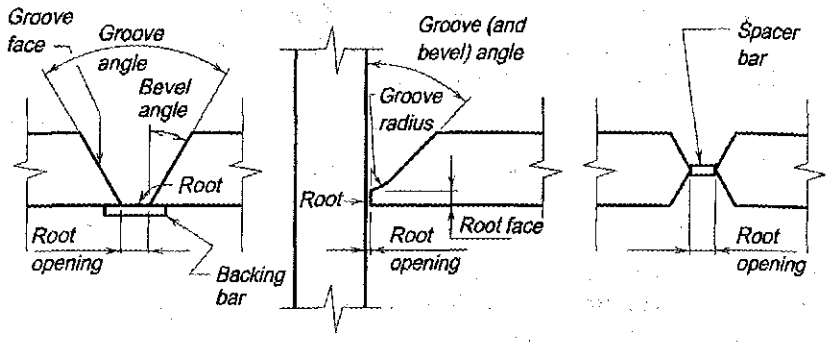

PREPARATION

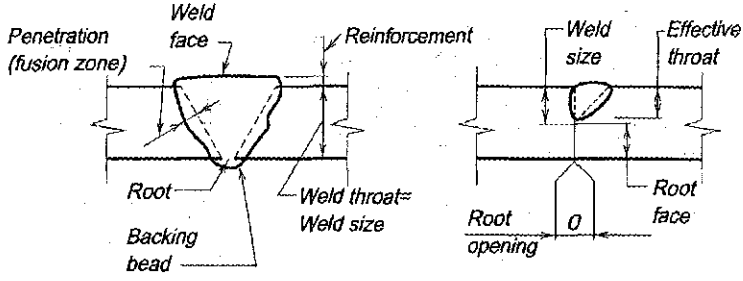

COMPLETE-JOINT-PENETRATION

PARTIAL-JOINT-PENETRATION

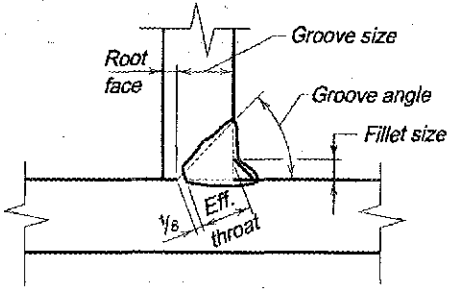

PARTIAL-JOINT-PENETRATION

(When Reinforcing Fillet is Specified)

Fig. 8-22. Groove weld nomenclature.

In developing these tables, the instantaneous center of rotation method was used, with a convergence criterion of less than 1/2% and considering deformation compatibility of adjacent weld elements. The first row in each table ($a = 0$) gives the available strength of a concentrically loaded weld group in accordance with AISC *Specification* Section J2.4. Linear interpolation within a given table between adjacent a and k values is permitted.

Straight-line interpolation between values for loads at different angles may be significantly unconservative. Either a rational analysis should be performed or the values for the next lower angle increment in the tables should be used for design. For weld group patterns not treated in these tables, a rational analysis is required.

Table 8-12. Approximate Number of Passes for Welds

Table 8-12 lists the approximate number of passes required for various welds. The actual number of passes can vary depending on the welding position and process used. The table can be used as a guide in selecting economical welds because the labor required will be roughly proportional to the number of passes. Longer single-pass welds will generally be more economical than shorter multi-pass welds because the number of passes, and therefore the cost, required to deposit the larger multi-pass weld increases faster than the strength of the weld.

PART 8 REFERENCES

AWS (1992), *Guide for the Nondestructive Inspection of Welds*, AWSB1.10, American Welding Society, Miami, FL.

AWS (2007), *Standard Symbols for Welding, Brazing, and Nondestructive Examination*, American Welding Society, Miami, FL.

Blodgett, O.W. (1966), *Design of Welded Structures*, James F. Lincoln Arc Welding Foundation, Cleveland, OH.

Blodgett, O.W. (1980), "Detailing to Achieve Practical Welded Fabrication," *Engineering Journal*, AISC, Vol. 17, No. 4, 4th Quarter, pp. 106–119, Chicago, IL.

Blodgett, O.W., Funderburk, R.S. and Miller, D.K. (1997), *Fabricator's and Erector's Guide to Welded Steel Construction*, James F. Lincoln Arc Welding Foundation, Cleveland, OH.

Butler, L.J., Pal, S. and Kulak, G.L. (1972), Eccentrically Loaded Welded Connections," *Journal of the Structural Division*, ASCE, Vol. 98, No. ST5, May, pp. 989–1005, Reston, VA.

Crawford, S.F. and Kulak, G.L. (1968), "Behavior of Eccentrically Loaded Bolted Connections," *Studies in Structural Engineering*, No. 4, Department of Civil Engineering, Nova Scotia Technical College, Halifax, Nova Scotia.

Higgins, T.R. (1971), "Treatment of Eccentrically Loaded Connections in the AISC Manual," *Engineering Journal*, AISC, Vol. 8, No. 2, April, pp. 52-54, Chicago, IL.

Institute of Welding (1972), *Procedures and Recommendations for the Ultrasonic Testing of Butt Welds*, London, England.

Kaufmann, J.A., Pense, A.W. and Stout, R.D. (1981), "An Evaluation of Factors Significant to Lamellar Tearing," *Welding Journal Research Supplement*, AWS, Vol. 60, No. 3, March, Miami, FL.

Krautkramer, J. (1990), *Ultrasonic Testing of Materials*, 4th Ed., Springer-Verlag, Berlin, West Germany.

Lesik, D.F. and Kennedy, D.J.L. (1990), "Ultimate Strength of Fillet-Welded Connections Loaded in Plane," *Canadian Journal of Civil Engineering*, National Research Council of Canada, Vol. 17, No. 1, Ottawa, Canada.

Post, J.W. (1990), "Box-Tube Connections: Choices of Joint Details and Their Influence on Costs," *National Steel Construction Conference Proceedings*, AISC, Chicago, IL.

Table 8-1
Coefficients, *C*, for Concentrically Loaded Weld Group Elements

Load angle on weld element, degrees	Largest load angle on any weld group element, degrees						
	90	75	60	45	30	15	0
0	0.825	0.849	0.876	0.909	0.948	0.994	1.00
15	1.02	1.04	1.05	1.07	1.06	0.883	
30	1.16	1.17	1.18	1.17	1.10		
45	1.29	1.30	1.29	1.26			
60	1.40	1.40	1.39				
75	1.48	1.47					
90	1.50						

Table 8-2
Prequalified Welded Joints

Symbols for Joint Types			
B	butt joint	BC	butt or corner joint
C	corner joint	TC	T- or corner joint
T	T-joint	BTC	butt, T- or corner joint
Symbols for Base Metal Thickness and Penetration			
L	limited thickness, complete-joint-penetration		
U	unlimited thickness, complete-joint-penetration		
P	partial-joint-penetration		
Symbols for Weld Types			
1	square-groove	6	single-U-groove
2	single-V-groove	7	double-U-groove
3	double-V-groove	8	single-J-groove
4	single-bevel-groove	9	double-J-groove
5	double-bevel-groove	10	flare-bevel-groove
Symbols for Welding Processes if not Shielded Metal Arc Welding (SMAW):			
S	submerged arc welding (SAW)		
G	gas metal arc welding (GMAW)		
F	flux cored arc welding (FCAW)		
Symbols for Welding Positions			
F	flat		
H	horizontal		
V	vertical		
OH	overhead		
Symbols for Joint Designation			
The lower case letters (e.g., a, b, c, d, etc.) are used to differentiate between joints that would otherwise have the same joint designation.			
Symbols for Dimensions			
R	Root opening		
α, β	Groove angles		
f	Root face		
r	J- or U-groove radius		
S, S_1, S_2	PJP groove weld depth of groove		
E, E_1, E_2	PJP groove weld sizes corresponding to S, S_1, S_2, respectively		
Notes to Prequalified Welded Joints			
1	Not prequalified for gas metal arc welding (GMAW) using short circuiting transfer nor GTAW. Refer to AWS D1.1 Annex A.		
2	Joint is welded from one side only.		
3	Cyclic load application limits these joints to the horizontal welding position. Refer to AWS D1.1 Section 2.18.2.		
4	Backgouge root to sound metal before welding second side.		
5	SMAW joints may be used for prequalified GMAW (except GMAW-S) and FCAW.		
6	Minimum effective throat thickness (E) as shown in AISC *Specification* Table J2.3; S as specified on drawings.		
7	If fillet welds are used in buildings to reinforce groove welds in corner and T-joints, they shall be equal to $^1/_4$ T_1, but need not exceed $^3/_8$ in. Groove welds in corner and T-joints of cyclically loaded structures shall be reinforced with fillet welds equal to $^1/_4$ T_1, but need not exceed $^3/_8$ in.		
8	Double-groove welds may have grooves of unequal depth, but the depth of the shallower groove shall be no less than one-fourth of the thickness of the thinner part joined.		
9	Double-groove welds may have grooves of unequal depth, provided these conform to the limitations of Note 6. Also, the effective throat thickness (E) applies individually to each groove.		
10	The orientation of the two members in the joints may vary from 135° to 180° for butt joints, or 45° to 135° for corner joints, or 45° to 90° for T-joints.		
11	For corner joints, the ouside groove preparation may be in either or both members, provided the basic groove configuration is not changed and adequate edge distance is maintained to support the welding operations without excessive edge melting.		
12	Effective throat thickness (E) is based on joints welded flush.		

Table 8-2 (continued)
Prequalified Welded Joints

Basic Weld Symbols

Back	Fillet	Plug or Slot	Groove or Butt						
			Square	V	Bevel	U	J	Flare V	Flare Bevel

Supplementary Weld Symbols

Backing	Spacer	Weld All Around	Field Weld	Contour		For other basic and supplementary weld symbols, see AWS A2.4
				Flush	Convex	

Standard Location of Elements of a Welding Symbol

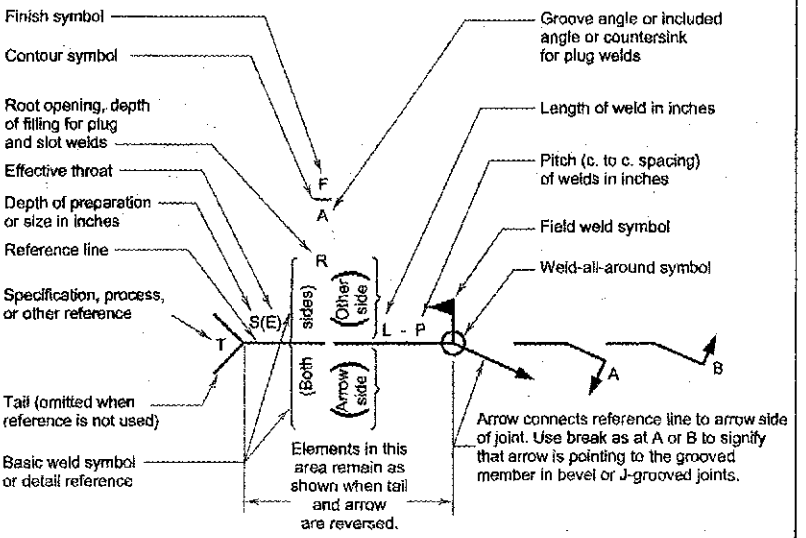

Note:
Size, weld symbol, length of weld, and spacing must read in that order, from left to right, along the reference line. Neither orientation of reference nor location of the arrow alters this rule.

The perpendicular leg of , weld symbols must be at left.

Dimensions of fillet welds must be shown on both the arrow side and the other side.

Symbols apply between abrupt changes in direction of welding unless governed by the "all around" symbol or otherwise dimensioned.

These symbols do not explicitly provide for the case that frequently occurs in structural work, where duplicate material (such as stiffeners) occurs on the far side of a web or gusset plate. The fabricating industry has adopted this convention: that when the billing of the detail material discloses the existence of a member on the far side as well as on the near side, the welding shown for the near side shall be duplicated on the far side.

FILLET

Table 8-2 (continued)
Prequalified Welded Joints
Fillet Welds

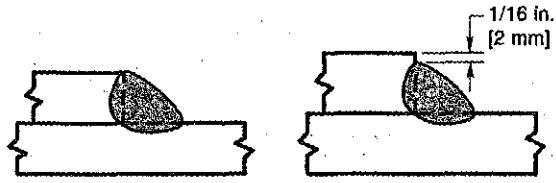

BASE METAL LESS THAN 1/4 in. [6 mm] THICK

(A)

BASE METAL 1/4 in. [6 mm] OR MORE IN THICKNESS

(B)

MAXIMUM DETAILED SIZE OF FILLET WELD ALONG EDGES

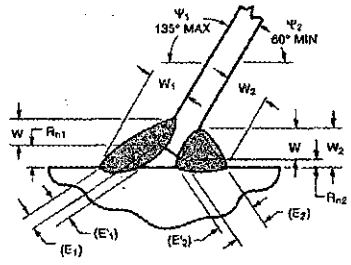

(A)

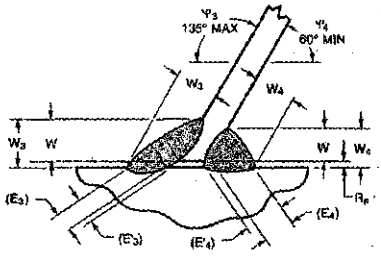

(B)

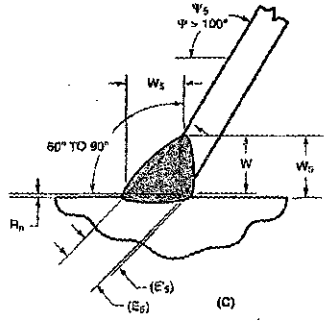

(C)

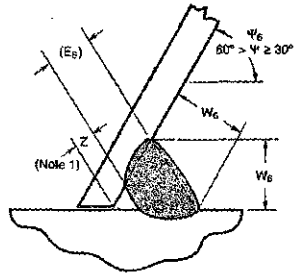

(D)
(See Note 2)

Notes:

1. (E_n), (E'_n) = Effective throat thickness dependant on magnitude of root opening (R_n). Refer to AWS D1.1 Section 5.22.1. Subscript *n* represents 1, 2, 3, 4, or 5.
2. t = thickness of thinner part.
3. Not prequalified for gas metal arc welding (GMAW) using short circuit transfer nor GTAW. Refer to AWS D1.1 Annex A for GMAW-S.
4. Figure D. Apply Z loss dimension of AWS D1.1 Table 2.2 to determine effective throat thickness.
5. Figure D. Not prequalified for angles under 30°. For welder qualifications see AWS D1.1 Table 4.8.
6. Angles under 60° are permissible, however, if the weld is considered to be a partial-joint-penetration groove weld.

Table 8-2 (continued)

CJP

Prequalified Welded Joints
Complete-Joint-Penetration Groove Welds

Square-groove weld (1)
Butt joint (B)
Corner joint (C)

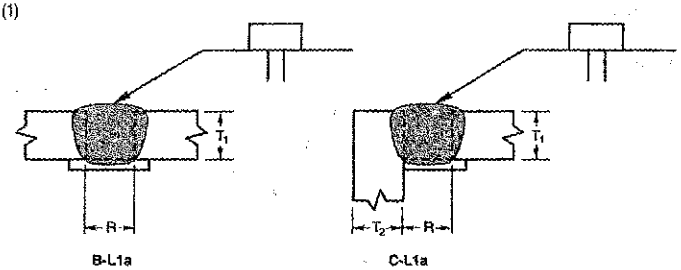

Welding Process	Joint Designation	Base Metal Thickness (U = unlimited)		Groove Preparation			Allowed Welding Positions	Gas Shielding for FCAW	Notes
				Root Opening	Tolerances				
		T_1	T_2		As Detailed (see 3.13.1)	As Fit-Up (see 3.13.1)			
SMAW	B-L1a	1/4 max	—	R = T_1	+1/16, –0	+1/4, –1/16	All	—	5, 10
	C-L1a	1/4 max	U	R = T_1	+1/16, –0	+1/4, –1/16	All	—	5, 10
FCAW GMAW	B-L1a-GF	3/8 max	—	R = T_1	+1/16, –0	+1/4, –1/16	All	Not Required	1, 10

Square-groove weld (1)
Butt joint (B)

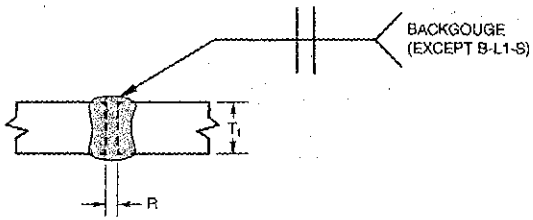

Welding Process	Joint Designation	Base Metal Thickness (U = unlimited)		Groove Preparation			Allowed Welding Positions	Gas Shielding for FCAW	Notes
				Root Opening	Tolerances				
		T_1	T_2		As Detailed (see 3.13.1)	As Fit-Up (see 3.13.1)			
SMAW	B-L1b	1/4 max	—	R = $\frac{T_1}{2}$	+1/16, –0	+1/16, –1/8	All	—	4, 5, 10
GMAW FCAW	B-L1b-GF	3/8 max	—	R = 0 to 1/8	+1/16, –0	+1/16, –1/8	All	Not Required	1, 4, 10
SAW	B-L1-S	3/8 max	—	R = 0	±0	+1/16, –0	F	—	10
SAW	B-L1a-S	5/8 max	—	R = 0	±0	+1/16, –0	F	—	4, 10

Reprinted from AWS D1.1 with permission from the American Welding Society (AWS)

Table 8-2 (continued)

CJP

Prequalified Welded Joints
Complete-Joint-Penetration Groove Welds

Square-groove weld (1)
T-joint (T)
Corner joint (C)

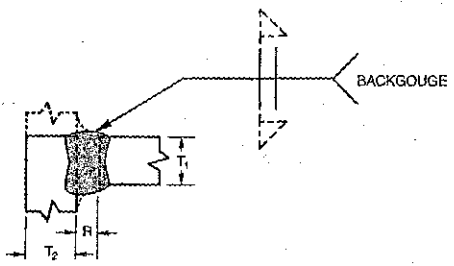

Welding Process	Joint Designation	Base Metal Thickness (U = unlimited)		Groove Preparation			Allowed Welding Positions	Gas Shielding for FCAW	Notes
				Root Opening	Tolerances				
		T_1	T_2		As Detailed (see 3.13.1)	As Fit-Up (see 3.13.1)			
SMAW	TC-L1b	1/4 max	U	$R = \frac{T_1}{2}$	+1/16, –0	+1/16, –1/8	All	—	4, 5, 7
GMAW FCAW	TC-L1-GF	3/8 max	U	R = 0 to 1/8	+1/16, –0	+1/16, –1/8	All	Not Required	1, 4, 7
SAW	TC-L1-S	3/8 max	U	R = 0	±0	+1/16, –0	F	—	4, 7

Single-V-groove weld (2)
Butt joint (B)

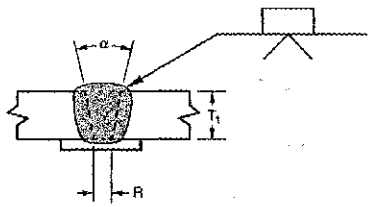

Tolerances	
As Detailed (see 3.13.1)	As Fit-Up (see 3.13.1)
R = +1/16, –0	+1/4, –1/16
α = +10°, –0°	+10°, –5°

Welding Process	Joint Designation	Base Metal Thickness (U = unlimited)		Groove Preparation		Allowed Welding Positions	Gas Shielding for FCAW	Notes
		T_1	T_2	Root Opening	Groove Angle			
SMAW	B-U2a	U	—	R = 1/4	α = 45°	All	—	5, 10
				R = 3/8	α = 30°	F, V, OH	—	5, 10
				R = 1/2	α = 20°	F, V, OH	—	5, 10
GMAW FCAW	B-U2a-GF	U	—	R = 3/16	α = 30°	F, V, OH	Required	1, 10
				R = 3/8	α = 30°	F, V, OH	Not req.	1, 10
				R = 1/4	α = 45°	F, V, OH	Not req.	1, 10
SAW	B-L2a-S	2 max	—	R = 1/4	α = 30°	F	—	10
SAW	B-U2-S	U	—	R = 5/8	α = 20°	F	—	10

Reprinted from AWS D1.1 with permission from the American Welding Society (AWS)

Table 8-2 (continued)

CJP

Prequalified Welded Joints
Complete-Joint-Penetration Groove Welds

Single-V-groove weld (2)
Corner joint (C)

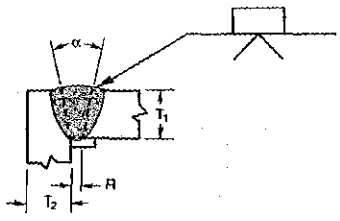

Tolerances	
As Detailed (see 3.13.1)	As Fit-Up (see 3.13.1)
R = +1/16, –0	+1/4, –1/16
α = +10°, –0°	+10°, –5°

Welding Process	Joint Designation	Base Metal Thickness (U = unlimited)		Groove Preparation		Allowed Welding Positions	Gas Shielding for FCAW	Notes
		T_1	T_2	Root Opening	Groove Angle			
SMAW	C-U2a	U	U	R = 1/4	α = 45°	All	—	5, 10
				R = 3/8	α = 30°	F, V, OH	—	5, 10
				R = 1/2	α = 20°	F, V, OH	—	5, 10
GMAW FCAW	C-U2a-GF	U	U	R = 3/16	α = 30°	F, V, OH	Required	1
				R = 3/8	α = 30°	F, V, OH	Not req.	1, 10
				R = 1/4	α = 45°	F, V, OH	Not req.	1, 10
SAW	C-L2a-S	2 max	U	R = 1/4	α = 30°	F	—	10
SAW	C-U2-S	U	U	R = 5/8	α = 20°	F	—	10

Reprinted from AWS D1.1 with permission from the American Welding Society (AWS)

CJP

Table 8-2 (continued)
Prequalified Welded Joints
Complete-Joint-Penetration Groove Welds

Single-V-groove weld (2)
Butt joint (B)

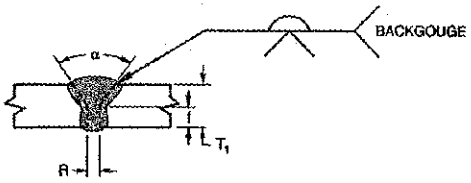

Welding Process	Joint Designation	Base Metal Thickness (U = unlimited) T_1	Base Metal Thickness (U = unlimited) T_2	Groove Preparation: Root Opening, Root Face, Groove Angle	Groove Preparation: Tolerances: As Detailed (see 3.13.1)	Groove Preparation: Tolerances: As Fit-Up (see 3.13.1)	Allowed Welding Positions	Gas Shielding for FCAW	Notes
SMAW	B-U2	U	—	R = 0 to 1/8 f = 0 to 1/8 α = 60°	+1/16, –0 +1/16, –0 +10°, –0°	+1/16, –1/8 Not Limited +10°, –5°	All	—	4, 5, 10
GMAW FCAW	B-U2-GF	U	—	R = 0 to 1/8 f = 0 to 1/8 α = 60°	+1/16, –0 +1/16, –0 +10°, –0°	+1/16, –1/8 Not Limited +10°, –5°	All	Not Required	1, 4, 10
SAW	B-L2c-S	Over 1/2 to 1	—	R = 0 f = 1/4 max α = 60°	R = ±0 f = +0, –f α = +10°, –0°	+1/16, –0 ± 1/16 +10°, –5°	F	—	4, 10
		Over 1 to 1 1/2	—	R = 0 f = 1/2 max α = 60°					
		Over 1 1/2 to 2	—	R = 0 f = 5/8 max α = 60°					

Reprinted from AWS D1.1 with permission from the American Welding Society (AWS)

Table 8-2 (continued)

Prequalified Welded Joints
Complete-Joint-Penetration Groove Welds

CJP

Single-V-groove weld (2)
Corner joint (C)

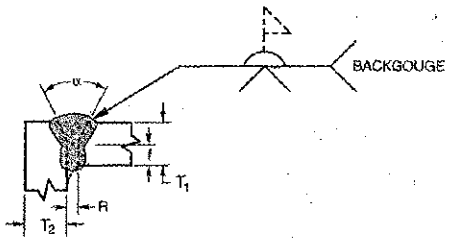

Welding Process	Joint Designation	Base Metal Thickness (U = unlimited)		Groove Preparation			Allowed Welding Positions	Gas Shielding for FCAW	Notes
				Root Opening Root Face Groove Angle	Tolerances				
		T_1	T_2		As Detailed (see 3.13.1)	As Fit-Up (see 3.13.1)			
SMAW	C-U2	U	U	R = 0 to 1/8 f = 0 to 1/8 α = 60°	+1/16, –0 +1/16, –0 +10°, –0°	+1/16, –1/8 Not Limited +10°, –5°	All	—	4, 5, 7, 10
GMAW FCAW	C-U2-GF	U	U	R = 0 to 1/8 f = 0 to 1/8 α = 60°	+1/16, –0 +1/16, –0 +10°, –0°	+1/16, –1/8 Not Limited +10°, –5°	All	Not Required	1, 4, 7, 10
SAW	C-U2b-S	U	U	R = 0 to 1/8 f = 1/4 max α = 60°	±0 +0, –1/4 +10°, –0°	+1/16, –0 ±1/16 +10°, –5°	F	—	4, 7, 10

Double-V-groove weld (3)
Butt joint (B)

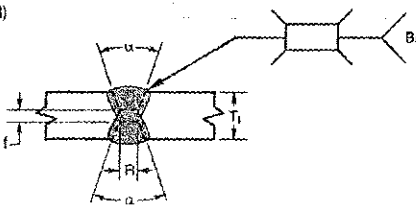

		Tolerances	
		As Detailed (see 3.13.1)	As Fit-Up (see 3.13.1)
		R = ±0	+1/4, –0
		f = ±0	+1/16, –0
		α = +10°, –0°	+10°, –5°
Spacer	SAW	±0	+1/16, –0
	SMAW	±0	1/8, –0

Welding Process	Joint Designation	Base Metal Thickness (U = unlimited)		Groove Preparation			Allowed Welding Positions	Gas Shielding for FCAW	Notes
		T_1	T_2	Root Opening	Root Face	Groove Angle			
SMAW	B-U3a	U Spacer = 1/8 × R	—	R = 1/4	f = 0 to 1/8	α = 45°	All	—	4, 5, 8, 10
				R = 3/8	f = 0 to 1/8	α = 30°	F, V, OH	—	
				R = 1/2	f = 0 to 1/8	α = 20°	F, V, OH	—	
SAW	B-U3a-S	U Spacer = 1/4 × R	—	R = 5/8	f = 0 to 1/4	α = 20°	F	—	4, 8, 10

Reprinted from AWS D1.1 with permission from the American Welding Society (AWS)

Table 8-2 (continued)

CJP

Prequalified Welded Joints
Complete-Joint-Penetration Groove Welds

Double-V-groove weld (3)
Butt joint (B)

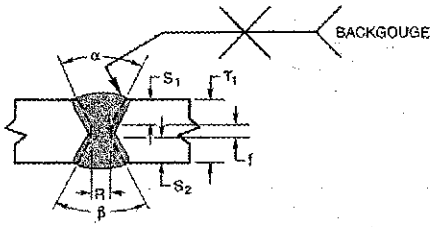

For B-U3c-S only		
T_1		S_1
Over	to	
2	2 1/2	1 3/8
2 1/2	3	1 3/4
3	3 5/8	2 1/8
3 5/8	4	2 3/8
4	4 3/4	2 3/4
4 3/4	5 1/2	3 1/4
5 1/2	6 1/4	3 3/4
For $T_1 > 6\frac{1}{4}$ or $T_1 \leq 2$ $S_1 = \frac{2}{3}(T_1 - \frac{1}{4})$		

Welding Process	Joint Designation	Base Metal Thickness (U = unlimited) T_1	Base Metal Thickness (U = unlimited) T_2	Groove Preparation Tolerances: Root Opening Root Face Groove Angle	Groove Preparation Tolerances: As Detailed (see 3.13.1)	Groove Preparation Tolerances: As Fit-Up (see 3.13.1)	Allowed Welding Positions	Gas Shielding for FCAW	Notes
SMAW	B-U3b	U	—	R = 0 to 1/8	+1/16, −0	+1/16, −1/8	All	—	4, 5, 8, 10
GMAW FCAW	B-U3-GF	U	—	f = 0 to 1/8	+1/16, −0	Not limited	All	Not required	1, 4, 8, 10
				α = β = 60°	+10°, −0°	+10°, −5°			
SAW	B-U3c-S	U	—	R = 0	+1/16, −0	+1/16, −0	F	—	4, 8, 10
				f = 1/4 min	+1/4, −0	+1/4, −0			
				α = β = 60°	+10°, −0°	+10°, −5°			
				To find S_1 see table above: $S_2 = T_1 - (S_1 + f)$					

Reprinted from AWS D1.1 with permission from the American Welding Society (AWS)

CJP

Table 8-2 (continued)
Prequalified Welded Joints
Complete-Joint-Penetration Groove Welds

Single-bevel-groove weld (4)
Butt joint (B)

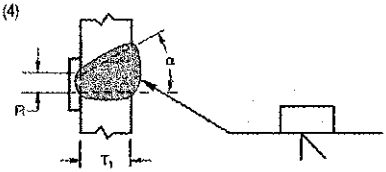

Tolerances	
As Detailed (see 3.13.1)	As Fit-Up (see 3.13.1)
R = +1/16, –0	+1/4, –1/16
α = +10°, –0°	+10°, –5°

Welding Process	Joint Designation	Base Metal Thickness (U = unlimited)		Groove Preparation		Allowed Welding Positions	Gas Shielding for FCAW	Notes
		T_1	T_2	Root Opening	Groove Angle			
SMAW	B-U4a	U	—	R = 1/4	α = 45°	All	—	3, 5, 10
				R = 3/8	α = 30°	All	—	3, 5, 10
GMAW FCAW	B-U4a-GF	U	—	R = 3/16	α = 30°	All	Required	1, 3, 10
				R = 1/4	α = 45°	All	Not req.	1, 3, 10
				R = 3/8	α = 30°	F, H	Not req.	1, 3, 10
SAW	B-U4a-S	U	U	R = 3/8	α = 30°	F	—	3, 10
				R = 1/4	α = 45°			

Single-bevel-groove weld (4)
T-joint (T)
Corner joint (C)

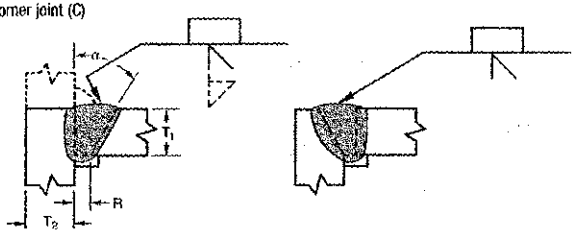

Tolerances	
As Detailed (see 3.13.1)	As Fit-Up (see 3.13.1)
R = +1/16, –0	+1/4, –1/16
α = +10°, –0°	+10°, –5°

Welding Process	Joint Designation	Base Metal Thickness (U = unlimited)		Groove Preparation		Allowed Welding Positions	Gas Shielding for FCAW	Notes
		T_1	T_2	Root Opening	Groove Angle			
SMAW	TC-U4a	U	U	R = 1/4	α = 45°	All	—	5, 7, 10, 11
				R = 3/8	α = 30°	F, V, OH	—	5, 7, 10, 11
GMAW FCAW	TC-U4a-GF	U	U	R = 3/16	α = 30°	All	Required	1, 7, 10, 11
				R = 3/8	α = 30°	F	Not req.	1, 7, 10, 11
				R = 1/4	α = 45°	All	Not req.	1, 7, 10, 11
SAW	TC-U4a-S	U	U	R = 3/8	α = 30°	F	—	7, 10, 11
				R = 1/4	α = 45°			

Reprinted from AWS D1.1 with permission from the American Welding Society (AWS)

Table 8-2 (continued)

CJP

Prequalified Welded Joints
Complete-Joint-Penetration Groove Welds

Single-bevel-groove weld (4)
Butt joint (B)

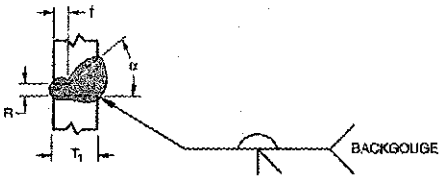

Welding Process	Joint Designation	Base Metal Thickness (U = unlimited) T_1	Base Metal Thickness (U = unlimited) T_2	Groove Preparation: Root Opening, Root Face, Groove Angle	Groove Preparation: Tolerances: As Detailed (see 3.13.1)	Groove Preparation: Tolerances: As Fit-Up (see 3.13.1)	Allowed Welding Positions	Gas Shielding for FCAW	Notes
SMAW	B-U4b	U	—	R = 0 to 1/8 f = 0 to 1/8 α = 45°	+1/16, –0 +1/16, –0 +10°, –0°	+1/16, –1/8 Not Limited +10°, –5°	All	—	3, 4, 5, 10
GMAW FCAW	B-U4b-GF	U	—				All	Not Required	1, 3, 4, 10
SAW	B-U4b-S	U	U	R = 0 f = 1/4 max α = 60°	±0 +0, –1/8 +10°, –0°	+1/4, –0 ±1/16 10°, –5°	F	—	3, 4, 10

Single-bevel-groove weld (4)
T-joint (T)
Corner joint (C)

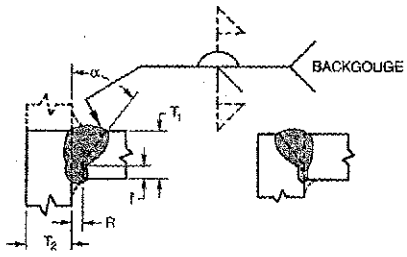

Welding Process	Joint Designation	Base Metal Thickness (U = unlimited) T_1	Base Metal Thickness (U = unlimited) T_2	Groove Preparation: Root Opening, Root Face, Groove Angle	Groove Preparation: Tolerances: As Detailed (see 3.13.1)	Groove Preparation: Tolerances: As Fit-Up (see 3.13.1)	Allowed Welding Positions	Gas Shielding for FCAW	Notes
SMAW	TC-U4b	U	U	R = 0 to 1/8 f = 0 to 1/8 α = 45°	+1/16, –0 +1/16, –0 +10°, –0°	+1/16, –1/8 Not Limited +10°, –5°	All	—	4, 5, 7, 10, 11
GMAW FCAW	TC-U4b-GF	U	U				All	Not Required	1, 4, 7, 10, 11
SAW	TC-U4b-S	U	U	R = 0 f = 1/4 max α = 60°	±0 +0, –1/8 +10°, –0°	+1/4, –0 ±1/16 10°, –5°	F	—	4, 7, 10, 11

Reprinted from AWS D1.1 with permission from the American Welding Society (AWS)

CJP

Table 8-2 (continued)
Prequalified Welded Joints
Complete-Joint-Penetration Groove Welds

Double-bevel-groove weld (5)
Butt joint (B)
T-joint (T)
Corner joint (C)

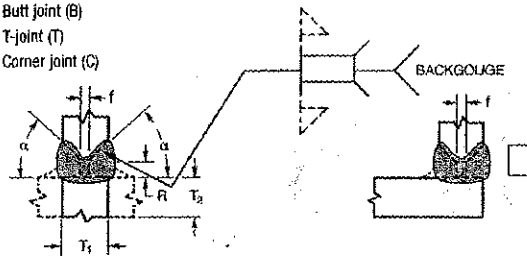

	Tolerances	
	As Detailed (see 3.13.1)	As Fit-Up (see 3.13.1)
	R = ±0	+1/4, –0
	f = +1/16, –0	±1/16
	α = +10°, –0°	+10°, –5°
Spacer	+1/16, –0	+1/8, –0

Welding Process	Joint Designation	Base Metal Thickness (U = unlimited) T_1	Base Metal Thickness (U = unlimited) T_2	Groove Preparation: Root Opening	Groove Preparation: Root Face	Groove Preparation: Groove Angle	Allowed Welding Positions	Gas Shielding for FCAW	Notes
SMAW	B-U5b	U Spacer = 1/6×R	U	R = 1/4	f = 0 to 1/8	α = 45°	All	—	3, 4, 5, 8, 10
	TC-U5a	U Spacer = 1/4×R	U	R = 1/4	f = 0 to 1/8	α = 45°	All	—	4, 5, 7, 8, 10, 11
				R = 3/8	f = 0 to 1/8	α = 30°	F, OH	—	4, 5, 7, 8, 10, 11

Double-bevel-groove weld
Butt joint (B)

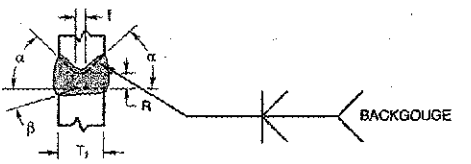

Welding Process	Joint Designation	Base Metal Thickness (U = unlimited) T_1	Base Metal Thickness (U = unlimited) T_2	Groove Preparation: Root Opening, Root Face, Groove Angle	Groove Preparation: Tolerances: As Detailed (see 3.13.1)	Groove Preparation: Tolerances: As Fit-Up (see 3.13.1)	Allowed Welding Positions	Gas Shielding for FCAW	Notes
SMAW	B-U5a	U	—	R = 0 to 1/6 f = 0 to 1/8 α = 45° β = 0° to 15°	+1/16, –0 +1/16, –0 $\alpha + \beta^{+10°}_{0°}$	+1/16, –1/8 Not limited $\alpha + \beta^{+10°}_{-5°}$	All	—	3, 4, 5, 8, 10
GMAW FCAW	B-U5-GF	U	—	R = 0 to 1/8 f = 0 to 1/8 α = 45° β = 0° to 15°	+1/16, –0 +1/16, –0 α + β = + 10°, –0°	+1/16, –1/8 Not limited α + β = + 10°, –5°	All	Not Required	1, 3, 4, 8, 10

Reprinted from AWS D1.1 with permission from the American Welding Society (AWS)

CJP

Table 8-2 (continued)
Prequalified Welded Joints
Complete-Joint-Penetration Groove Welds

Double-bevel-groove weld (5)
T-joint (T)
Corner joint (C)

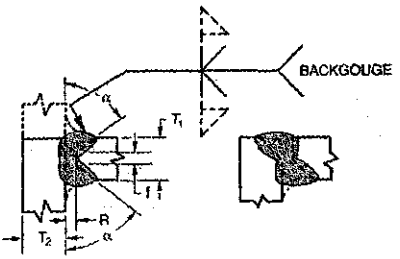

Welding Process	Joint Designation	Base Metal Thickness (U = unlimited)		Groove Preparation			Allowed Welding Positions	Gas Shielding for FCAW	Notes
				Root Opening Root Face Groove Angle	Tolerances				
		T_1	T_2		As Detailed (see 3.13.1)	As Fit-Up (see 3.13.1)			
SMAW	TC-U5b	U	U	R = 0 to 1/8 f = 0 to 1/8 α = 45°	+1/16, –0 +1/16, –0 +10°, –0	+1/16, –1/8 Not limited +10°, –5°	All	—	4, 5, 7, 8, 10, 11
GMAW FCAW	TC-U5-GF	U	U				All	Not Required	1, 4, 7, 8, 10, 11
SAW	TC-U5-S	U	U	R = 0 f = 1/4 max α = 60°	± 0 +0, –3/16 +10°, –0°	+1/16, –0 ±1/16 +10°, –5°	F	—	4, 7, 8, 10, 11

Reprinted from AWS D1.1 with permission from the American Welding Society (AWS)

Table 8-2 (continued)

CJP

Prequalified Welded Joints
Complete-Joint-Penetration Groove Welds

Single-U-groove weld (6)
Butt joint (B)
Corner joint (C)

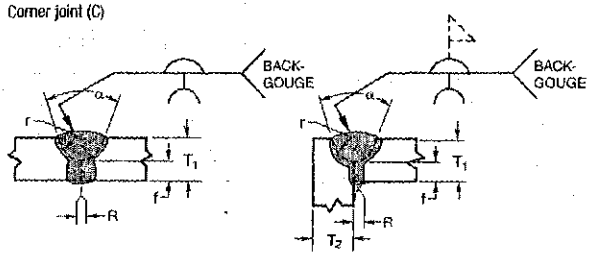

Tolerances	
As Detailed (see 3.13.1)	As Fit-Up (see 3.13.1)
R = +1/16, –0	+1/16, –1/8
α = +10°, –0°	+10°, –5°
f = ±1/16	Not Limited
r = +1/8, –0	+1/8, –0

Welding Process	Joint Designation	Base Metal Thickness (U = unlimited)		Groove Preparation				Allowed Welding Positions	Gas Shielding for FCAW	Notes
		T_1	T_2	Root Opening	Groove Angle	Root Face	Bevel Radius			
SMAW	B-U6	U	U	R = 0 to 1/8	α = 45°	f = 1/8	r = 1/4	All	—	4, 5, 10
				R = 0 to 1/8	α = 20°	f = 1/8	r = 1/4	F, OH	—	4, 5, 10
	C-U6	U	U	R = 0 to 1/8	α = 45°	f = 1/8	r = 1/4	All	—	4, 5, 7, 10
				R = 0 to 1/8	α = 20°	f = 1/8	r = 1/4	F, OH	—	4, 5, 7, 10
GMAW FCAW	B-U6-GF	U	U	R = 0 to 1/8	α = 20°	f = 1/8	r = 1/4	All	Not req.	1, 4, 10
	C-U6-GF	U	U	R = 0 to 1/8	α = 20°	f = 1/8	r = 1/4	All	Not req.	1, 4, 7, 10

Reprinted from AWS D1.1 with permission from the American Welding Society (AWS)

Table 8-2 (continued)

CJP

Prequalified Welded Joints
Complete-Joint-Penetration Groove Welds

Double-U-groove weld (7)
Butt joint (B)

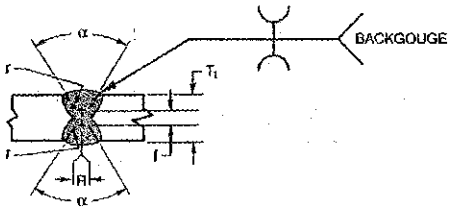

Tolerances	
As Detailed (see 3.13.1)	As Fit-Up (see 3.13.1)
For B-U7 and B-U7-GF	
R = +1/16, −0	1/16, −1/8
α = +10°, −0°	+10°, −5°
f = ±1/16, −0	Not Limited
r = +1/4, −0	±1/16
For B-U7-S	
R = ±0	+1/16, −0
f = +0, +1/4	±1/16

Welding Process	Joint Designation	Base Metal Thickness (U = unlimited)		Groove Preparation				Allowed Welding Positions	Gas Shielding for FCAW	Notes
		T_1	T_2	Root Opening	Groove Angle	Root Face	Bevel Radius			
SMAW	B-U7	U	—	R = 0 to 1/8	α = 45°	f = 1/8	r = 1/4	All	—	4, 5, 8, 10
				R = 0 to 1/8	α = 20°	f = 1/8	r = 1/4	F, OH	—	4, 5, 8, 10
GMAW FCAW	B-U7-GF	U	—	R = 0 to 1/8	α = 20°	f = 1/8	r = 1/4	All	Not req.	1, 4, 10, 8
SAW	B-U7-S	U	—	R = 0	α = 20°	f = 1/4 max	r = 1/4	F	—	4, 8, 10

Reprinted from AWS D1.1 with permission from the American Welding Society (AWS)

Table 8-2 (continued)

CJP

Prequalified Welded Joints
Complete-Joint-Penetration Groove Welds

Single-J-groove weld (B)
Butt joint (B)

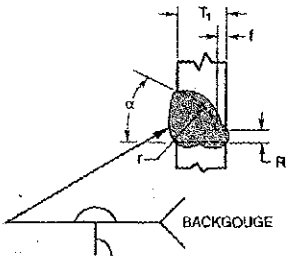

Tolerances	
As Detailed (see 3.13.1)	As Fit-Up (see 3.13.1)
B-U8 and B-U8-GF	
R = +1/16, −0	+1/16, −1/8
α = +10°, −0°	+10°, −5°
f = +1/8, −0	Not Limited
r = +1/4, −0	±1/16
B-U8-S	
R = ±0	+1/4, −0
α = +10°, −0°	+10°, −5°
f = +0, −1/8	±1/16
r = +1/4, −0	±1/16

Welding Process	Joint Designation	Base Metal Thickness (U = unlimited)		Groove Preparation				Allowed Welding Positions	Gas Shielding for FCAW	Notes
		T_1	T_2	Root Opening	Groove Angle	Root Face	Bevel Radius			
SMAW	B-U8	U	—	R = 0 to 1/8	α = 45°	f = 1/8	r = 3/8	All	—	3, 4, 5, 10
GMAW FCAW	B-U8-GF	U	—	R = 0 to 1/8	α = 30°	f = 1/8	r = 3/8	All	Not req.	1, 3, 4, 10
SAW	B-U8-S	U	U	R = 0	α = 45°	f = 1/4 max	r = 3/8	F	—	3, 4, 10

Reprinted from AWS D1.1 with permission from the American Welding Society (AWS)

Table 8-2 (continued)

CJP

Prequalified Welded Joints
Complete-Joint-Penetration Groove Welds

Single-J-groove weld (8)
T-joint (T)
Corner joint (C)

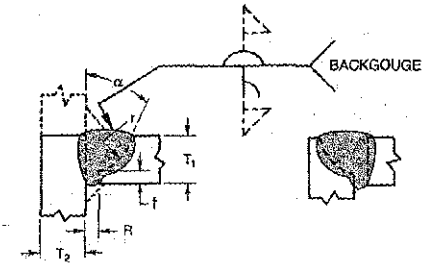

Tolerances	
As Detailed (see 3.13.1)	As Fit-Up (see 3.13.1)
TC-U8a and TC-U8a-GF	
R = +1/16, –0	1/16, –1/8
α = +10°, –0°	+10°, –5°
f = +1/16, –0	Not Limited
r = +1/4, –0	±1/16
TC-U8a-S	
R = ±0	+1/4, –0
α = +10°, –0°	+10°, –5°
f = +0, –1/8	±1/16
r = +1/4, –0	±1/16

Welding Process	Joint Designation	Base Metal Thickness (U = unlimited)		Groove Preparation				Allowed Welding Positions	Gas Shielding for FCAW	Notes
		T_1	T_2	Root Opening	Groove Angle	Root Face	Bevel Radius			
SMAW	TC-U8a	U	U	R = 0 to 1/8	α = 45°	f = 1/8	r = 3/8	All	—	4, 5, 7, 10, 11
				R = 0 to 1/8	α = 30°	f = 1/8	r = 3/8	F, OH	—	4, 5, 7, 10, 11
GMAW FCAW	TC-U8a-GF	U	U	R = 0 to 1/8	α = 30°	f = 1/8	r = 3/8	All	Not req.	1, 4, 7, 10, 11
SAW	TC-U8a-S	U	U	R = 0	α = 45°	f = 1/4 max	r = 3/8	F	—	4, 7, 10, 11

Reprinted from AWS D1.1 with permission from the American Welding Society (AWS)

Table 8-2 (continued)

CJP

Prequalified Welded Joints
Complete-Joint-Penetration Groove Welds

Double-J-groove weld (9)
Butt joint (B)

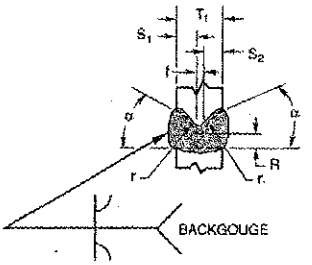

Tolerances	
As Detailed (see 3.13.1)	As Fit-Up (see 3.13.1)
R = +1/16, –0	+1/16, –1/8
α = +10°, –0°	+10°, –5°
f = +1/16, –0	Not Limited
r = +1/8, –0	±1/16

Welding Process	Joint Designation	Base Metal Thickness (U = unlimited)		Groove Preparation				Allowed Welding Positions	Gas Shielding for FCAW	Notes
		T_1	T_2	Root Opening	Groove Angle	Root Face	Bevel Radius			
SMAW	B-U9	U	—	R = 0 to 1/8	α = 45°	f = 1/8	r = 3/8	All	—	3, 4, 5, 8, 10
GMAW FCAW	B-U9-GF	U	—	R = 0 to 1/8	α = 30°	f = 1/8	r = 3/8	All	Not req.	1, 3, 4, 8, 10

Double-J-groove weld (9)
T-joint (T)
Corner joint (C)

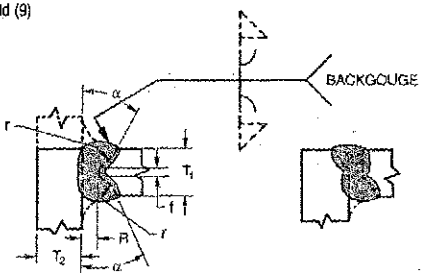

Tolerances	
As Detailed (see 3.13.1)	As Fit-Up (see 3.13.1)
R = +1/16, –0	+1/16, –1/8
α = +10°, –0°	+10°, –5°
f = +1/16, –0	Not Limited
r = 1/8, –0	±1/16

Welding Process	Joint Designation	Base Metal Thickness (U = unlimited)		Groove Preparation				Allowed Welding Positions	Gas Shielding for FCAW	Notes
		T_1	T_2	Root Opening	Groove Angle	Root Face	Bevel Radius			
SMAW	TC-U9a	U	U	R = 0 to 1/8	α = 45°	f = 1/8	r = 5/8	All	—	4, 5, 7, 8, 10, 11
				R = 0 to 1/8	α = 30°	f = 1/8	r = 3/8	F, OH	—	4, 5, 7, 8, 11
GMAW FCAW	TC-U9a-GF	U	U	R = 0 to 1/8	α = 30°	f = 1/8	r = 3/8	All	Not req.	1, 4, 7, 8, 10, 11

Reprinted from AWS D1.1 with permission from the American Welding Society (AWS)

Table 8-2 (continued)
Prequalified Welded Joints
Partial-Joint-Penetration Groove Welds

PJP

Square-groove weld (1)
Butt joint (B)

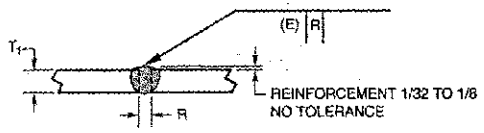

Welding Process	Joint Designation	Base Metal Thickness (U = unlimited)		Groove Preparation			Allowed Welding Positions	Weld Size (E)	Notes
					Tolerances				
		T_1	T_2	Root Opening	As Detailed (see 3.12.3)	As Fit-Up (see 3.12.3)			
SMAW	B-P1a	1/8	—	R = 0 to 1/16	+1/16, −0	±1/16	All	T_1 −1/32	2, 5
	B-P1c	1/4 max	—	$R = \frac{T_1}{2}$ min	+1/16, −0	±1/16	All	$\frac{T_1}{2}$	2, 5

Square-groove weld (1)
Butt joint (B)

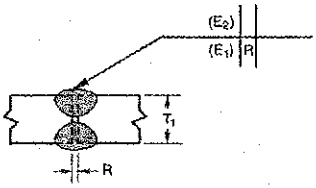

$E_1 + E_2$ must not exceed $\frac{3T_1}{4}$

Welding Process	Joint Designation	Base Metal Thickness (U = unlimited)		Groove Preparation			Allowed Welding Positions	Total Weld Size ($E_1 + E_2$)	Notes
					Tolerances				
		T_1	T_2	Root Opening	As Detailed (see 3.12.3)	As Fit-Up (see 3.12.3)			
SMAW	B-P1b	1/4 max	—	$R = \frac{T_1}{2}$	+1/16, −0	±1/16	All	$\frac{3T_1}{4}$	5

Reprinted from AWS D1.1 with permission from the American Welding Society (AWS)

Table 8-2 (continued)

PJP

Prequalified Welded Joints
Partial-Joint-Penetration Groove Welds

Single-V-groove weld (2)
Butt joint (B)
Corner joint (C)

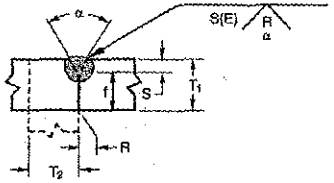

Welding Process	Joint Designation	Base Metal Thickness (U = unlimited)		Groove Preparation			Allowed Welding Positions	Weld Size (E)	Notes
				Root Opening Root Face Groove Angle	Tolerances				
		T_1	T_2		As Detailed (see 3.12.3)	As Fit-Up (see 3.12.3)			
SMAW	BC-P2	1/4 min	U	R = 0 f = 1/32 min α = 60°	–0, +1/16 +U, –0 +10°, –0°	+1/8, –1/16 ±1/16 + 10°, –5°	All	S	2, 5, 6, 10
GMAW FCAW	BC-P2-GF	1/4 min	U	R = 0 f = 1/8 min α = 60°	–0, +1/16 +U, –0 +10°, –0°	+1/8, –1/16 ±1/16 + 10°, –5°	All	S	1, 2, 6, 10
SAW	BC-P2-S	7/16 min	U	R = 0 f = 1/4 min α = 60°	±0 +U, –0 +10°, –0°	+1/16, –0 ±1/16 + 10°, –5°	F	S	2, 6, 10

Reprinted from AWS D1.1 with permission from the American Welding Society (AWS)

Table 8-2 (continued)

PJP

Prequalified Welded Joints
Partial-Joint-Penetration Groove Welds

Double-V-groove weld (3)
Butt joint (B)

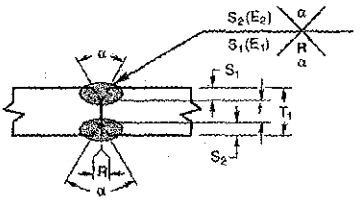

Welding Process	Joint Designation	Base Metal Thickness (U = unlimited)		Groove Preparation			Allowed Welding Positions	Total Weld Size ($E_1 + E_2$)	Notes
				Root Opening Root Face Groove Angle	Tolerances				
		T_1	T_2		As Detailed (see 3.12.3)	As Fit-Up (see 3.12.3)			
SMAW	B-P3	1/2 min	—	$R = 0$ $f = 1/8$ min $\alpha = 60°$	$+1/16, -0$ $+U, -0$ $+10°, -0°$	$+1/8, -1/16$ $\pm 1/16$ $+10°, -5°$	All	$S_1 + S_2$	5, 6, 9, 10
GMAW FCAW	B-P3-GF	1/2 min	—	$R = 0$ $f = 1/8$ min $\alpha = 60°$	$+1/16, -0$ $+U, -0$ $+10°, -0°$	$+1/8, -1/16$ $\pm 1/16$ $+10°, -5°$	All	$S_1 + S_2$	1, 6, 9, 10
SAW	B-P3-S	3/4 min	—	$R = 0$ $f = 1/4$ min $\alpha = 60°$	± 0 $+U, -0$ $+10°, -0°$	$+1/16, -0$ $\pm 1/16$ $+10°, -5°$	F	$S_1 + S_2$	6, 9, 10

Reprinted from AWS D1.1 with permission from the American Welding Society (AWS)

Table 8-2 (continued)

PJP

Prequalified Welded Joints
Partial-Joint-Penetration Groove Welds

Single-bevel-groove weld (4)
Butt joint (B)
T-joint (T)
Corner joint (C)

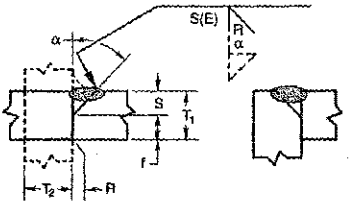

Welding Process	Joint Designation	Base Metal Thickness (U = unlimited)		Groove Preparation			Allowed Welding Positions	Total Weld Size (E)	Notes
				Root Opening Root Face Groove Angle	Tolerances				
		T_1	T_2		As Detailed (see 3.12.3)	As Fit-Up (see 3.12.3)			
SMAW	BTC-P4	U	U	R = 0 f = 1/8 min α = 45°	+1/16, –0 +U, –0 +10°, –0°	+1/8, –1/16 ±1/16 + 10°, –5°	All	S–1/8	2, 5, 6, 7, 10, 11
GMAW FCAW	BTC-P4-GF	1/4 min	U	R = 0 f = 1/8 min α = 45°	+1/16, –0 +U, –0 +10°, –0°	+1/8, –1/16 ±1/16 + 10°, –5°	F, H V, OH	S S–1/8	1, 2, 6, 7, 10, 11
SAW	TC-P4-S	7/16 min	U	R = 0 f = 1/4 min α = 60°	±0 +U, –0 +10°, –0°	+1/16, –0 ±1/16 + 10°, –5°	F	S	2, 6, 7, 10, 11

Reprinted from AWS D1.1 with permission from the American Welding Society (AWS)

Table 8-2 (continued)

PJP

Prequalified Welded Joints
Partial-Joint-Penetration Groove Welds

Double-bevel-groove weld (5)
Butt joint (B)
T-joint (T)
Corner joint (C)

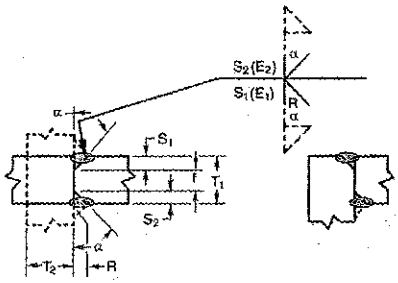

Welding Process	Joint Designation	Base Metal Thickness (U = unlimited)		Groove Preparation			Allowed Welding Positions	Total Weld Size ($E_1 + E_2$)	Notes
				Root Opening Root Face Groove Angle	Tolerances				
		T_1	T_2		As Detailed (see 3.12.3)	As Fit-Up (see 3.12.3)			
SMAW	BTC-P5	5/16 min	U	R = 0 f = 1/8 min α = 45°	+1/16, –0 +U, –0 +10°, –0°	+1/8, –1/16 ±1/16 + 10°, –5°	All	$S_1 + S_2$ –1/4	5, 6, 7, 9, 10, 11
GMAW FCAW	BTC-P5-GF	1/2 min	U	R = 0 f = 1/8 min α = 45°	+1/16, –0 +U, –0 +10°, –0°	+1/8, –1/16 ±1/16 + 10°, –5°	F, H V, OH	$S_1 + S_2$ $S_1 + S_2$ –1/4	1, 6, 7, 9, 10, 11
SAW	TC-P5-S	3/4 min	U	R = 0 f = 1/4 min α = 60°	±0 +U, –0 +10°, –0°	+1/16, –0 ±1/16 + 10°, –5°	F	$S_1 + S_2$	6, 7, 9, 10, 11

Reprinted from AWS D1.1 with permission from the American Welding Society (AWS)

PJP

Table 8-2 (continued)
Prequalified Welded Joints
Partial-Joint-Penetration Groove Welds

Single-U-groove weld (6)
Butt joint (B)
Corner joint (C)

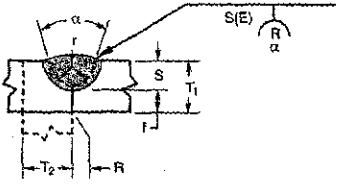

Welding Process	Joint Designation	Base Metal Thickness (U = unlimited)		Groove Preparation			Allowed Welding Positions	Total Weld Size (E)	Notes
				Root Opening Root Face Bevel Radius Groove Angle	Tolerances				
		T_1	T_2		As Detailed (see 3.12.3)	As Fit-Up (see 3.12.3)			
SMAW	BC-P6	1/4 min	U	R = 0 f = 1/32 min r = 1/4 α = 45°	+1/16, –0 +U, –0 +1/4, –0 +10°, –0°	+1/8, –1/16 ±1/16 ±1/16 + 10°, –5°	All	S	2, 5, 6, 10
GMAW FCAW	BC-P6-GF	1/4 min	U	R = 0 f = 1/8 min r = 1/4 α = 20°	+1/16, –0 +U, –0 +1/4, –0 +10°, –0°	+1/8, –1/16 ±1/16 ±1/16 + 10°, –5°	All	S	1, 2, 6, 10
SAW	BC-P6-S	7/16 min	U	R = 0 f = 1/4 min r = 1/4 α = 20°	±0 +U, –0 +1/4, –0 +10°, –0°	+1/16, –0° ±1/16 ±1/16 + 10°, –5°	F	S	2, 6, 10

Reprinted from AWS D1.1 with permission from the American Welding Society (AWS)

Table 8-2 (continued)

PJP

Prequalified Welded Joints
Partial-Joint-Penetration Groove Welds

Double-U-groove weld (7)
Butt joint (B)

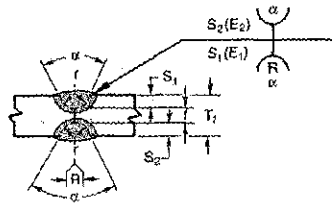

Welding Process	Joint Designation	Base Metal Thickness (U = unlimited)		Groove Preparation			Allowed Welding Positions	Total Weld Size ($E_1 + E_2$)	Notes
				Root Opening	Tolerances				
		T_1	T_2	Root Face Bevel Radius Groove Angle	As Detailed (see 3.12.3)	As Fit-Up (see 3.12.3)			
SMAW	B-P7	1/2 min	—	R = 0 f = 1/8 min r = 1/4 α = 45°	+1/16, –0 +U, –0 +1/4, –0 +10°, –0°	+1/8, –1/16 ±1/16 ±1/16 + 10°, –5°	All	$S_1 + S_2$	5, 6, 9, 10
GMAW FCAW	B-P7-GF	1/2 min	—	R = 0 f = 1/8 min r = 1/4 α = 20°	+1/16, –0 +U, –0 +1/4, –0 +10°, –0°	+1/8, –1/16 ±1/16 ±1/16 + 10°, –5°	All	$S_1 + S_2$	1, 6, 9, 10
SAW	B-P7-S	3/4 min	—	R = 0 f = 1/4 min r = 1/4 α = 20°	±0 +U, –0 +1/4, –0 +10°, –0°	+1/16, –0° ±1/16 ±1/16 + 10°, –5°	F	$S_1 + S_2$	6, 9, 10

Reprinted from AWS D1.1 with permission from the American Welding Society (AWS)

PJP

Table 8-2 (continued)
Prequalified Welded Joints
Partial-Joint-Penetration Groove Welds

Single-J-groove weld (B)
Butt joint (B)
T-joint (T)
Corner joint (C)

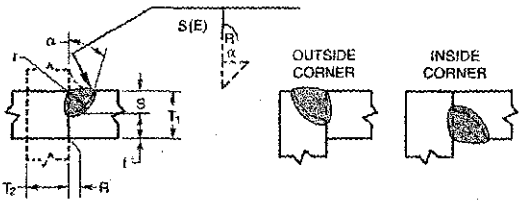

*α_{oc} = Outside corner groove angle.
**α_{ic} = Inside corner groove angle.

Welding Process	Joint Designation	Base Metal Thickness (U = unlimited) T_1	Base Metal Thickness (U = unlimited) T_2	Groove Preparation: Root Opening, Root Face, Bevel Radius, Groove Angle	Groove Preparation: Tolerances: As Detailed (see 3.12.3)	Groove Preparation: Tolerances: As Fit-Up (see 3.12.3)	Allowed Welding Positions	Total Weld Size (E)	Notes
SMAW	B-P8	1/4 min	U	R = 0 f = 1/8 min r = 3/8 α = 30°	+1/16, –0 +U, –0 +1/4, –0 +10°, –0°	+1/8, –1/16 ±1/16 ±1/16 +10°, –5°	All	S	5, 6, 7, 10, 11
SMAW	TC-P8	1/4 min	U	R = 0 f = 1/8 min r = 3/8 α_{oc} = 30°* α_{ic} = 45°**	+1/16, –0 +U, –0 +1/4, –0 +10°, –0° +10°, –0°	+1/8, –1/16 ±1/16 ±1/16 +10°, –5° +10°, –5°	All	S	5, 6, 7, 10, 11
GMAW FCAW	B-P8-GF	1/4 min	U	R = 0 f = 1/8 min r = 3/8 α = 30°	+1/16, –0 +U, –0 +1/4, –0 +10°, –0°	+1/8, –1/16 ±1/16 ±1/16 +10°, –5°	All	S	1, 6, 7, 10, 11
GMAW FCAW	TC-P8-GF	1/4 min	U	R = 0 f = 1/8 min r = 3/8 α_{oc} = 30°* α_{ic} = 45°**	+1/16, –0 +U, –0 +1/4, –0 +10°, –0° +10°, –0°	+1/8, –1/16 ±1/16 ±1/16 +10°, –5° +10°, –5°	All	S	1, 6, 7, 10, 11
SAW	B-P8-S	7/16 min	U	R = 0 f = 1/4 min r = 1/2 α = 20°	±0 +U, –0 +1/4, –0 +10°, –0°	+1/16, –0 ±1/16 ±1/16 +10°, –5°	F	S	6, 7, 10, 11
SAW	TC-P8-S	7/16 min	U	R = 0 f = 1/4 min r = 1/2 α_{oc} = 20°* α_{ic} = 45°**	±0 +U, –0 +1/4, –0 +10°, –0° +10°, –0°	+1/16, –0 ±1/16 ±1/16 +10°, –5° +10°, –5°	F	S	6, 7, 10, 11

Reprinted from AWS D1.1 with permission from the American Welding Society (AWS)

Table 8-2 (continued)

PJP

Prequalified Welded Joints
Partial-Joint-Penetration Groove Welds

Double-J-groove weld (9)
Butt joint (B)
T-joint (T)
Corner joint (C)

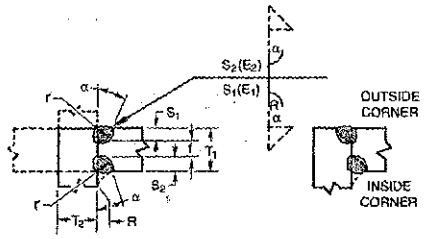

*α_{oc} = Outside corner groove angle.
**α_{ic} = Inside corner groove angle.

Welding Process	Joint Designation	Base Metal Thickness (U = unlimited) T_1	Base Metal Thickness (U = unlimited) T_2	Groove Preparation: Root Opening, Root Face, Bevel Radius, Groove Angle	Groove Preparation Tolerances: As Detailed (see 3.12.3)	Groove Preparation Tolerances: As Fit-Up (see 3.12.3)	Allowed Welding Positions	Total Weld Size ($E_1 + E_2$)	Notes
SMAW	B-P9	1/2 min	U	R = 0 f = 1/8 min r = 3/8 α = 30°	+1/16, −0 +U, −0 +1/4, −0 +10°, −0°	+1/8, −1/16 ±1/16 ±1/16 +10°, −5°	All	$S_1 + S_2$	5, 6, 7, 9, 10, 11
SMAW	TC-P9	1/2 min	U	R = 0 f = 1/8 min r = 3/8 α_{oc} = 30°* α_{ic} = 45°**	+1/16, −0 +U, −0 +1/4, −0 +10°, −0° +10°, −0°	+1/8, −1/16 ±1/16 ±1/16 +10°, −5° +10°, −5°	All	$S_1 + S_2$	5, 6, 7, 9, 10, 11
GMAW FCAW	B-P9-GF	1/2 min	U	R = 0 f = 1/8 min r = 3/8 α = 30°	+1/16, −0 +U, −0 +1/4, −0 +10°, −0°	+1/8, −1/16 ±1/16 ±1/16 +10°, −5°	All	$S_1 + S_2$	1, 6, 7, 9, 10, 11
GMAW FCAW	TC-P9-GF	1/2 min	U	R = 0 f = 1/8 min r = 3/8 α_{oc} = 30°* α_{ic} = 45°**	±0 +U, −0 +1/4, −0 +10°, −0° +10°, −0°	+1/16, −0 ±1/16 ±1/16 +10°, −5° +10°, −5°	All	$S_1 + S_2$	1, 6, 7, 9, 10, 11
SAW	B-P9-S	3/4 min	U	R = 0 f = 1/4 min r = 1/2 α = 20°	±0 +U, −0 +1/4, −0 +10°, −0°	+1/16, −0 ±1/16 ±1/16 +10°, −5°	F	$S_1 + S_2$	6, 7, 9, 10, 11
SAW	TC-P9-S	3/4 min	U	R = 0 f = 1/4 min r = 1/2 α_{oc} = 20°* α_{ic} = 45°**	±0 +U, −0 +1/4, −0 +10°, −0° +10°, −0°	+1/16, −0 ±1/16 ±1/16 +10°, −5° +10°, −5°	F	$S_1 + S_2$	6, 7, 9, 10, 11

Reprinted from AWS D1.1 with permission from the American Welding Society (AWS)

FLARE

Table 8-2 (continued)
Prequalified Welded Joints
Flare-Bevel Groove Welds

Flare-bevel-groove weld (10)
Butt joint (B)
T-joint (T)
Corner joint (C)

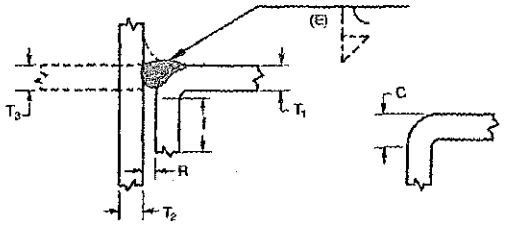

Welding Process	Joint Designation	Base Metal Thickness (U = unlimited)			Groove Preparation			Allowed Welding Positions	Total Weld Size (E)	Notes
					Root Opening Root Face Bend Radius*	Tolerances				
		T_1	T_2	T_3		As Detailed (see 3.12.3)	As Fit-Up (see 3.12.3)			
SMAW FCAW-S	BTC-P10	$^3/_{16}$ min	U	T_1 min	R = 0 f = $^3/_{16}$ min C = $\frac{3T_1}{2}$ min	$+^1/_{16}, -0$ +U, −0 +U, −0	$+^1/_8, -^1/_{16}$ +U, $-^1/_{16}$ +U, −0	All	$\frac{5T_1}{8}$	5, 7, 10, 12
GMAW FCAW-G	BTC-P10-GF	$^3/_{16}$ min	U	T_1 min	R = 0 f = $^3/_{16}$ min C = $\frac{3T_1}{2}$ min	$+^1/_{16}, -0$ +U, −0 +U, −0	$+^1/_8, -^1/_{16}$ +U, $-^1/_{16}$ +U, −0	All	$\frac{5T_1}{4}$	1, 7, 10, 12
SAW	B-P10-S	$^1/_2$ min	N/A	$^1/_2$ min	R = 0 f = $^1/_2$ min C = $\frac{3T_1}{2}$ min	±0 +U, −0 +U, −0	$+^1/_{16}, -0°$ +U, $-^1/_{16}$ +U, −0	F	$\frac{5T_1}{8}$	7, 10, 12

* For cold formed (A500) rectangular tubes, C dimension is not limited. See the following:

Effective Weld Size of Flare-Bevel-Groove Welded Joints. Tests have been performed on cold formed ASTM A 500 material exhibiting a "C" dimension as small as T1 with a nominal radius of 2t. As the radius increases, the "C" dimension also increases. The corner curvature may not be a quadrant of a circle tangent to the sides. The corner dimension, "C," may be less than the radius of the corner.

Reprinted from AWS D1.1 with permission from the American Welding Society (AWS)

TUBE

Table 8-2 (continued)
Prequalified Welded Joints
PJP T-, Y- and K-Tubular Connections

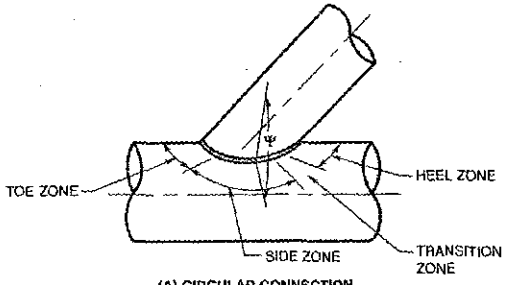

(A) CIRCULAR CONNECTION

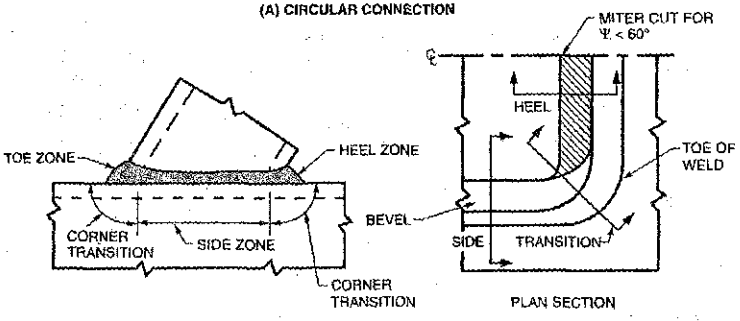

(B) STEPPED BOX CONNECTION

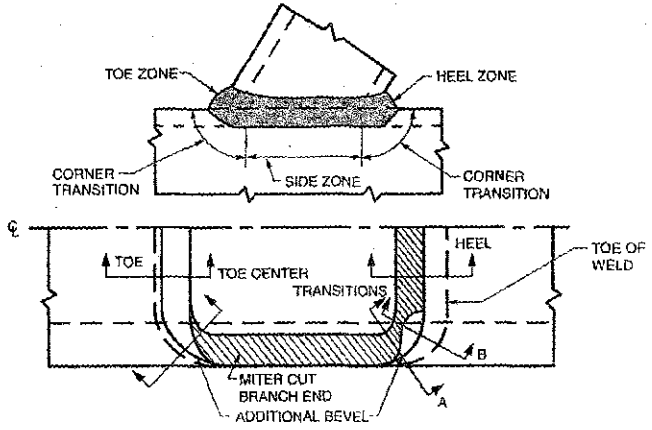

(C) MATCHED BOX CONNECTION

Reprinted from AWS D1.1 with permission from the American Welding Society (AWS)

TUBE

Table 8-2 (continued)
Prequalified Welded Joints
PJP T-, Y- and K-Tubular Connections

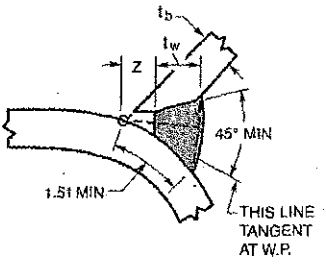

TRANSITION A

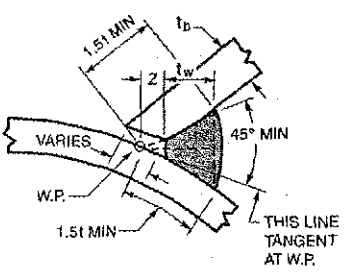

TRANSITION B

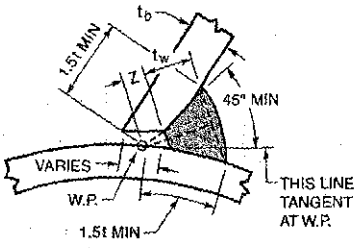

$\Psi = 75°–60°$

TRANSITION OR HEEL

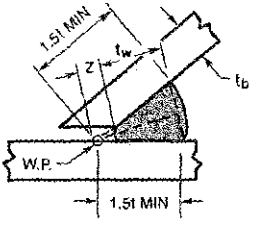

$\Psi = 60°–30°$

HEEL

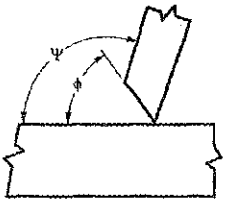

SKETCH FOR ANGULAR DEFINITION

$150° \geq \Psi \geq 30°$

$90° > \phi \geq 30°$

Reprinted from AWS D1.1 with permission from the American Welding Society (AWS)

TUBE

Table 8-2 (continued)
Prequalified Welded Joints
PJP T-, Y- and K-Tubular Connections

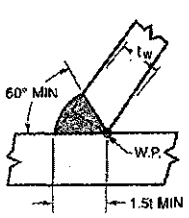

Ψ = 150°–105°
TOE

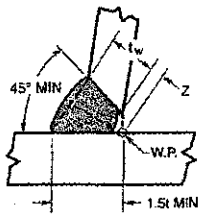

Ψ = 105°–90°
TOE OR HEEL

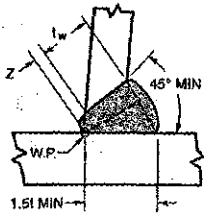

Ψ = 90°–75°
SIDE OR HEEL

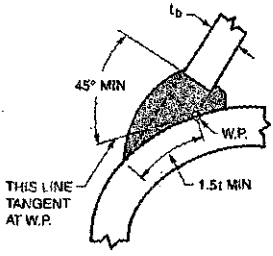

TOE CORNER

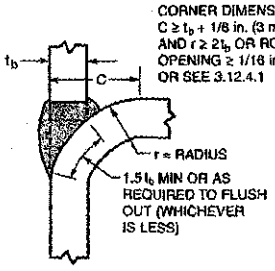

SIDE MATCHED

General Notes:
- t = thickness of thinner section.
- Bevel to feather edge except in transition and heel zones.
- Root opening: 0 to 3/16 in. [5 mm].
- Not prequalified for under 30°.
- Weld size (effective throat) $t_w \geq t$; Z Loss Dimensions shown in Table 2.8.
- Calculations per 2.24.1.3 shall be done for leg length less than 1.5t, as shown.
- For Box Section, joint preparation for corner transitions shall provide a smooth transition from one detail to another. Welding shall be carried continuously around corners, with corners fully built up and all weld starts and stops within flat faces.
- See Annex B for definition of local dihedral angle, Ψ.
- W.P. = work point.

Reprinted from AWS D1.1 with permission from the American Welding Society (AWS)

Table 8-3
Electrode Strength Coefficient, C_1

Electrode	F_{EXX} (ksi)	C_1
E60	60	0.857
E70	70	1.00
E80	80	1.03
E90	90	1.16
E100	100	1.21
E110	110	1.34

Table 8-4
Coefficients, C, for Eccentrically Loaded Weld Groups
Angle = 0°

Available strength of a weld group, ϕR_n or R_n/Ω, is determined with
$R_n = CC_1Dl$ ($\phi = 0.75$, $\Omega = 2.00$)

LRFD	ASD
$C_{min} = \frac{P_u}{\phi C_1 Dl}$ $D_{min} = \frac{P_u}{\phi C C_1 l}$ $l_{min} = \frac{P_u}{\phi C C_1 D}$	$C_{min} = \frac{\Omega P_a}{C_1 Dl}$ $D_{min} = \frac{\Omega P_a}{C C_1 l}$ $l_{min} = \frac{\Omega P_a}{C C_1 D}$

where
P = required force, P_u or P_a, kips
D = number of sixteenths-of-an-inch in the fillet weld size
l = characteristic length of weld group, in.
$a = e_x/l$
e_x = horizontal component of eccentricity of P with respect to centroid of weld group, in.
C = coefficient tabulated below
C_1 = electrode strength coefficient from Table 8-3 (1.0 for E70XX electrodes)

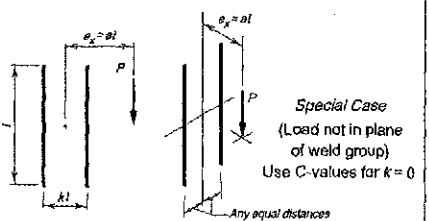

a	k															
	0	0.1	0.2	0.3	0.4	0.5	0.6	0.7	0.8	0.9	1.0	1.2	1.4	1.6	1.8	2.0
0.00	3.71	3.71	3.71	3.71	3.71	3.71	3.71	3.71	3.71	3.71	3.71	3.71	3.71	3.71	3.71	3.71
0.10	3.72	3.72	3.72	3.71	3.70	3.69	3.67	3.65	3.63	3.61	3.59	3.55	3.52	3.48	3.44	3.43
0.15	3.67	3.66	3.65	3.64	3.62	3.60	3.58	3.56	3.54	3.52	3.50	3.46	3.43	3.39	3.36	3.33
0.20	3.51	3.51	3.50	3.49	3.47	3.46	3.44	3.42	3.41	3.39	3.38	3.35	3.32	3.30	3.27	3.25
0.25	3.31	3.31	3.31	3.30	3.29	3.28	3.28	3.27	3.26	3.25	3.25	3.23	3.21	3.20	3.18	3.16
0.30	3.09	3.09	3.10	3.10	3.10	3.10	3.11	3.11	3.11	3.11	3.11	3.11	3.10	3.09	3.08	3.07
0.40	2.66	2.67	2.68	2.70	2.73	2.75	2.77	2.80	2.81	2.83	2.84	2.87	2.88	2.89	2.90	2.90
0.50	2.30	2.30	2.32	2.36	2.40	2.44	2.48	2.52	2.55	2.58	2.60	2.65	2.68	2.70	2.72	2.73
0.60	2.00	2.00	2.03	2.07	2.12	2.18	2.23	2.28	2.32	2.36	2.39	2.45	2.49	2.53	2.56	2.58
0.70	1.76	1.77	1.79	1.84	1.90	1.96	2.02	2.07	2.12	2.16	2.20	2.27	2.33	2.38	2.41	2.45
0.80	1.57	1.57	1.60	1.65	1.71	1.78	1.84	1.90	1.95	2.00	2.04	2.12	2.18	2.24	2.28	2.32
0.90	1.41	1.42	1.45	1.50	1.56	1.62	1.69	1.75	1.80	1.85	1.90	1.98	2.05	2.11	2.16	2.20
1.0	1.28	1.29	1.32	1.37	1.43	1.49	1.56	1.62	1.67	1.72	1.77	1.86	1.93	2.00	2.05	2.10
1.2	1.08	1.08	1.12	1.16	1.22	1.28	1.35	1.41	1.46	1.51	1.56	1.65	1.73	1.80	1.86	1.91
1.4	0.928	0.936	0.966	1.01	1.07	1.13	1.19	1.24	1.30	1.35	1.40	1.49	1.57	1.64	1.70	1.75
1.6	0.815	0.823	0.852	0.894	0.945	1.00	1.06	1.11	1.16	1.21	1.26	1.35	1.43	1.50	1.56	1.62
1.8	0.727	0.734	0.761	0.800	0.848	0.899	0.953	1.00	1.05	1.10	1.15	1.24	1.31	1.38	1.45	1.50
2.0	0.655	0.663	0.688	0.724	0.768	0.817	0.867	0.916	0.964	1.01	1.06	1.14	1.22	1.28	1.35	1.40
2.2	0.597	0.604	0.627	0.661	0.702	0.747	0.794	0.841	0.887	0.931	0.975	1.06	1.13	1.20	1.26	1.31
2.4	0.547	0.554	0.576	0.608	0.646	0.689	0.733	0.777	0.821	0.864	0.905	0.983	1.06	1.12	1.18	1.24
2.6	0.506	0.512	0.533	0.562	0.598	0.638	0.680	0.722	0.764	0.805	0.845	0.920	0.990	1.05	1.11	1.17
2.8	0.470	0.476	0.495	0.523	0.557	0.595	0.634	0.674	0.714	0.753	0.791	0.864	0.932	0.994	1.05	1.10
3.0	0.439	0.445	0.463	0.489	0.521	0.557	0.594	0.632	0.670	0.708	0.745	0.815	0.880	0.940	0.996	1.05

Shaded values indicate the value is based on the greatest available strength permitted by AISC *Specification* Sections J2.4, J2.4(a), J2.4(b) and J2.4(c).

Table 8-4 (continued)
Coefficients, C, for Eccentrically Loaded Weld Groups
Angle = 15°

Available strength of a weld group, ϕR_n or R_n/Ω, is determined with
$R_n = CC_1Dl$ ($\phi = 0.75$, $\Omega = 2.00$)

LRFD	ASD
$C_{min} = \frac{P_u}{\phi C_1 Dl}$ $D_{min} = \frac{P_u}{\phi C C_1 l}$ $l_{min} = \frac{P_u}{\phi C C_1 D}$	$C_{min} = \frac{\Omega P_a}{C_1 Dl}$ $D_{min} = \frac{\Omega P_a}{C C_1 l}$ $l_{min} = \frac{\Omega P_a}{C C_1 D}$

where
P = required force, P_u or P_a, kips
D = number of sixteenths-of-an-inch in the fillet weld size
l = characteristic length of weld group, in.
$a = e_x/l$
e_x = horizontal component of eccentricity of P with respect to centroid of weld group, in.
C = coefficient tabulated below
C_1 = electrode strength coefficient from Table 8-3 (1.0 for E70XX electrodes)

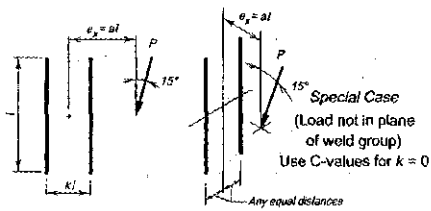

a	k															
	0	0.1	0.2	0.3	0.4	0.5	0.6	0.7	0.8	0.9	1.0	1.2	1.4	1.6	1.8	2.0
0.00	3.96	3.96	3.96	3.96	3.96	3.96	3.96	3.96	3.96	3.96	3.96	3.96	3.96	3.96	3.96	3.96
0.10	3.79	3.79	3.78	3.78	3.77	3.76	3.75	3.74	3.73	3.72	3.71	3.69	3.67	3.65	3.64	3.62
0.15	3.68	3.68	3.67	3.66	3.65	3.64	3.63	3.62	3.61	3.61	3.60	3.58	3.57	3.55	3.54	3.53
0.20	3.51	3.51	3.51	3.50	3.50	3.49	3.49	3.48	3.48	3.47	3.47	3.46	3.46	3.45	3.44	3.43
0.25	3.31	3.31	3.31	3.31	3.31	3.32	3.32	3.32	3.33	3.33	3.33	3.34	3.34	3.34	3.34	3.34
0.30	3.09	3.09	3.10	3.11	3.13	3.14	3.15	3.16	3.17	3.18	3.19	3.21	3.22	3.23	3.24	3.24
0.40	2.68	2.68	2.69	2.72	2.75	2.79	2.82	2.85	2.88	2.90	2.93	2.96	3.00	3.02	3.04	3.06
0.50	2.32	2.32	2.35	2.38	2.43	2.48	2.53	2.57	2.61	2.65	2.68	2.74	2.79	2.83	2.86	2.89
0.60	2.03	2.03	2.06	2.10	2.16	2.22	2.27	2.33	2.38	2.42	2.46	2.54	2.60	2.65	2.69	2.72
0.70	1.79	1.80	1.82	1.87	1.93	2.00	2.06	2.12	2.18	2.23	2.27	2.36	2.42	2.48	2.53	2.58
0.80	1.60	1.60	1.63	1.68	1.75	1.81	1.88	1.94	2.00	2.06	2.11	2.20	2.27	2.34	2.39	2.44
0.90	1.44	1.45	1.48	1.53	1.59	1.66	1.73	1.79	1.85	1.91	1.96	2.05	2.14	2.21	2.27	2.32
1.0	1.31	1.32	1.35	1.40	1.46	1.53	1.60	1.66	1.72	1.78	1.83	1.93	2.01	2.09	2.15	2.21
1.2	1.10	1.11	1.14	1.19	1.25	1.32	1.38	1.45	1.51	1.56	1.62	1.72	1.80	1.88	1.95	2.01
1.4	0.954	0.961	0.993	1.04	1.10	1.16	1.22	1.28	1.34	1.39	1.45	1.54	1.63	1.71	1.78	1.84
1.6	0.839	0.847	0.876	0.919	0.972	1.03	1.09	1.15	1.20	1.25	1.31	1.40	1.49	1.57	1.64	1.70
1.8	0.748	0.756	0.783	0.824	0.872	0.926	0.981	1.04	1.09	1.14	1.19	1.28	1.37	1.45	1.52	1.58
2.0	0.675	0.683	0.708	0.746	0.791	0.841	0.893	0.945	0.995	1.04	1.09	1.18	1.26	1.34	1.41	1.47
2.2	0.615	0.622	0.646	0.681	0.723	0.770	0.819	0.868	0.916	0.963	1.01	1.10	1.18	1.25	1.32	1.38
2.4	0.565	0.572	0.594	0.626	0.666	0.710	0.756	0.802	0.848	0.893	0.937	1.02	1.10	1.17	1.24	1.30
2.6	0.522	0.529	0.550	0.580	0.617	0.658	0.702	0.746	0.789	0.832	0.874	0.954	1.03	1.10	1.16	1.22
2.8	0.485	0.491	0.511	0.540	0.575	0.614	0.655	0.697	0.738	0.779	0.819	0.896	0.969	1.04	1.10	1.16
3.0	0.453	0.459	0.478	0.505	0.538	0.574	0.614	0.653	0.693	0.732	0.771	0.845	0.915	0.980	1.04	1.10

Shaded values indicate the value is based on the greatest available strength permitted by AISC *Specification* Sections J2.4, J2.4(a), J2.4(b) and J2.4(c).

Table 8-4 (continued)
Coefficients, C, for Eccentrically Loaded Weld Groups
Angle = 30°

Available strength of a weld group, ϕR_n or R_n/Ω, is determined with
$R_n = CC_1Dl$ ($\phi = 0.75$, $\Omega = 2.00$)

LRFD	ASD
$C_{min} = \frac{P_u}{\phi C_1 Dl}$ $D_{min} = \frac{P_u}{\phi C C_1 l}$ $l_{min} = \frac{P_u}{\phi C C_1 D}$	$C_{min} = \frac{\Omega P_a}{C_1 Dl}$ $D_{min} = \frac{\Omega P_a}{C C_1 l}$ $l_{min} = \frac{\Omega P_a}{C C_1 D}$

where
P = required force, P_u or P_a, kips
D = number of sixteenths-of-an-inch in the fillet weld size
l = characteristic length of weld group, in.
$a = e_x/l$
e_x = horizontal component of eccentricity of P with respect to centroid of weld group, in.
C = coefficient tabulated below
C_1 = electrode strength coefficient from Table 8-3 (1.0 for E70XX electrodes)

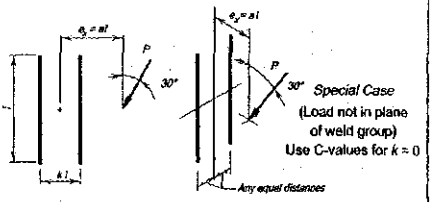

a	k															
	0	0.1	0.2	0.3	0.4	0.5	0.6	0.7	0.8	0.9	1.0	1.2	1.4	1.6	1.8	2.0
0.00	4.37	4.37	4.37	4.37	4.37	4.37	4.37	4.37	4.37	4.37	4.37	4.37	4.37	4.37	4.37	4.37
0.10	4.05	4.05	4.05	4.05	4.06	4.06	4.07	4.08	4.08	4.08	4.08	4.08	4.08	4.08	4.07	4.06
0.15	3.83	3.83	3.83	3.84	3.84	3.84	3.85	3.85	3.86	3.87	3.87	3.89	3.91	3.92	3.92	3.93
0.20	3.64	3.64	3.64	3.65	3.65	3.66	3.67	3.68	3.69	3.70	3.71	3.72	3.74	3.76	3.77	3.79
0.25	3.43	3.43	3.43	3.45	3.46	3.48	3.50	3.51	3.53	3.54	3.56	3.58	3.60	3.62	3.64	3.66
0.30	3.22	3.22	3.23	3.24	3.27	3.30	3.32	3.35	3.37	3.39	3.41	3.45	3.48	3.50	3.52	3.54
0.40	2.81	2.81	2.83	2.86	2.90	2.94	2.99	3.03	3.07	3.11	3.14	3.19	3.24	3.28	3.31	3.34
0.50	2.46	2.46	2.49	2.53	2.58	2.64	2.69	2.75	2.80	2.85	2.89	2.96	3.02	3.08	3.12	3.16
0.60	2.17	2.17	2.20	2.25	2.31	2.37	2.44	2.50	2.56	2.62	2.67	2.75	2.83	2.89	2.94	2.99
0.70	1.93	1.93	1.96	2.02	2.08	2.15	2.22	2.29	2.36	2.42	2.47	2.57	2.65	2.72	2.78	2.84
0.80	1.73	1.74	1.77	1.82	1.89	1.96	2.03	2.11	2.18	2.24	2.30	2.40	2.49	2.57	2.64	2.69
0.90	1.57	1.57	1.61	1.66	1.73	1.80	1.88	1.95	2.02	2.08	2.14	2.25	2.34	2.43	2.50	2.56
1.0	1.43	1.44	1.47	1.52	1.59	1.66	1.74	1.81	1.88	1.95	2.01	2.12	2.22	2.30	2.38	2.44
1.2	1.21	1.22	1.25	1.31	1.37	1.44	1.51	1.59	1.65	1.72	1.78	1.89	1.99	2.08	2.16	2.23
1.4	1.05	1.06	1.09	1.14	1.20	1.27	1.34	1.41	1.47	1.53	1.59	1.71	1.81	1.90	1.98	2.05
1.6	0.926	0.934	0.966	1.01	1.07	1.13	1.20	1.26	1.33	1.39	1.44	1.55	1.65	1.74	1.82	1.90
1.8	0.827	0.835	0.865	0.909	0.962	1.02	1.08	1.14	1.20	1.26	1.32	1.42	1.52	1.61	1.69	1.76
2.0	0.747	0.755	0.783	0.824	0.874	0.929	0.987	1.04	1.10	1.16	1.21	1.31	1.41	1.49	1.57	1.64
2.2	0.681	0.689	0.715	0.754	0.800	0.852	0.906	0.961	1.01	1.07	1.12	1.22	1.31	1.39	1.47	1.54
2.4	0.626	0.634	0.658	0.694	0.737	0.786	0.837	0.889	0.940	0.990	1.04	1.13	1.22	1.30	1.38	1.45
2.6	0.579	0.586	0.609	0.643	0.684	0.729	0.778	0.827	0.875	0.924	0.971	1.06	1.15	1.23	1.30	1.37
2.8	0.538	0.545	0.567	0.599	0.637	0.680	0.726	0.773	0.819	0.865	0.910	0.997	1.08	1.16	1.23	1.30
3.0	0.503	0.510	0.530	0.560	0.596	0.637	0.681	0.725	0.769	0.813	0.856	0.940	1.02	1.09	1.16	1.23

Shaded values indicate the value is based on the greatest available strength permitted by AISC *Specification* Sections J2.4, J2.4(a), J2.4(b) and J2.4(c).

Table 8-4 (continued)
Coefficients, C, for Eccentrically Loaded Weld Groups
Angle = 45°

Available strength of a weld group, ϕR_n or R_n/Ω, is determined with
$R_n = CC_1Dl$ ($\phi = 0.75$, $\Omega = 2.00$)

LRFD	ASD
$C_{min} = \dfrac{P_u}{\phi C_1 Dl}$ $D_{min} = \dfrac{P_u}{\phi C C_1 l}$ $l_{min} = \dfrac{P_u}{\phi C C_1 D}$	$C_{min} = \dfrac{\Omega P_a}{C_1 Dl}$ $D_{min} = \dfrac{\Omega P_a}{C C_1 l}$ $l_{min} = \dfrac{\Omega P_a}{C C_1 D}$

where
P = required force, P_u or P_a, kips
D = number of sixteenths-of-an-inch in the fillet weld size
l = characteristic length of weld group, in.
a = e_x/l
e_x = horizontal component of eccentricity of P with respect to centroid of weld group, in.
C = coefficient tabulated below
C_1 = electrode strength coefficient from Table 8-3 (1.0 for E70XX electrodes)

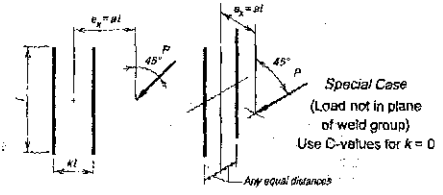

a	k															
	0	0.1	0.2	0.3	0.4	0.5	0.6	0.7	0.8	0.9	1.0	1.2	1.4	1.6	1.8	2.0
0.00	4.82	4.82	4.82	4.82	4.82	4.82	4.82	4.82	4.82	4.82	4.82	4.82	4.82	4.82	4.82	4.82
0.10	4.49	4.49	4.50	4.51	4.53	4.55	4.57	4.59	4.61	4.62	4.63	4.66	4.67	4.68	4.69	4.69
0.15	4.18	4.18	4.20	4.23	4.26	4.30	4.34	4.37	4.40	4.43	4.46	4.50	4.54	4.57	4.60	4.61
0.20	3.92	3.92	3.94	3.96	3.99	4.03	4.08	4.13	4.18	4.22	4.26	4.33	4.38	4.43	4.47	4.50
0.25	3.70	3.70	3.71	3.74	3.77	3.81	3.86	3.91	3.96	4.01	4.06	4.14	4.21	4.27	4.33	4.37
0.30	3.49	3.49	3.51	3.54	3.57	3.62	3.67	3.72	3.77	3.81	3.86	3.96	4.04	4.12	4.18	4.23
0.40	3.10	3.10	3.12	3.16	3.21	3.27	3.33	3.39	3.45	3.50	3.55	3.64	3.73	3.82	3.90	3.96
0.50	2.75	2.76	2.79	2.83	2.89	2.96	3.03	3.10	3.17	3.24	3.29	3.39	3.48	3.56	3.64	3.72
0.60	2.46	2.47	2.50	2.55	2.62	2.70	2.77	2.85	2.93	3.00	3.06	3.17	3.27	3.36	3.43	3.50
0.70	2.21	2.22	2.26	2.31	2.39	2.47	2.55	2.63	2.71	2.79	2.85	2.98	3.08	3.17	3.25	3.33
0.80	2.01	2.01	2.05	2.11	2.19	2.27	2.35	2.44	2.52	2.60	2.67	2.80	2.91	3.01	3.09	3.17
0.90	1.83	1.84	1.88	1.94	2.01	2.10	2.18	2.27	2.35	2.43	2.51	2.64	2.75	2.85	2.95	3.03
1.0	1.68	1.69	1.73	1.79	1.87	1.95	2.04	2.12	2.20	2.28	2.36	2.49	2.61	2.72	2.81	2.89
1.2	1.44	1.45	1.49	1.55	1.62	1.70	1.79	1.87	1.95	2.03	2.11	2.24	2.36	2.47	2.57	2.66
1.4	1.25	1.26	1.30	1.36	1.43	1.51	1.59	1.67	1.75	1.83	1.90	2.03	2.15	2.26	2.36	2.45
1.6	1.11	1.12	1.16	1.21	1.28	1.35	1.43	1.51	1.58	1.66	1.73	1.86	1.98	2.09	2.19	2.28
1.8	0.996	1.01	1.04	1.09	1.15	1.22	1.30	1.37	1.44	1.51	1.58	1.71	1.82	1.93	2.03	2.12
2.0	0.902	0.911	0.944	0.993	1.05	1.12	1.19	1.26	1.32	1.39	1.46	1.58	1.69	1.80	1.90	1.99
2.2	0.824	0.833	0.864	0.910	0.965	1.03	1.09	1.16	1.22	1.29	1.35	1.47	1.58	1.68	1.78	1.87
2.4	0.758	0.767	0.796	0.839	0.891	0.949	1.01	1.07	1.14	1.20	1.26	1.37	1.48	1.58	1.67	1.76
2.6	0.702	0.711	0.738	0.778	0.827	0.882	0.940	1.00	1.06	1.12	1.17	1.28	1.39	1.49	1.58	1.66
2.8	0.653	0.662	0.688	0.726	0.772	0.823	0.879	0.936	0.992	1.05	1.10	1.21	1.31	1.40	1.49	1.58
3.0	0.611	0.619	0.644	0.680	0.723	0.772	0.825	0.879	0.932	0.986	1.04	1.14	1.24	1.33	1.42	1.50

Shaded values indicate the value is based on the greatest available strength permitted by AISC *Specification* Sections J2.4, J2.4(a), J2.4(b) and J2.4(c).

Table 8-4 (continued)
Coefficients, C, for Eccentrically Loaded Weld Groups
Angle = 60°

Available strength of a weld group, ϕR_n or R_n/Ω, is determined with
$R_n = CC_1Dl$ ($\phi = 0.75$, $\Omega = 2.00$)

LRFD			ASD		
$C_{min} = \frac{P_u}{\phi C_1 Dl}$	$D_{min} = \frac{P_u}{\phi C C_1 l}$	$l_{min} = \frac{P_u}{\phi C C_1 D}$	$C_{min} = \frac{\Omega P_a}{C_1 Dl}$	$D_{min} = \frac{\Omega P_a}{C C_1 l}$	$l_{min} = \frac{\Omega P_a}{C C_1 D}$

where
P = required force, P_u or P_a, kips
D = number of sixteenths-of-an-inch in the fillet weld size
l = characteristic length of weld group, in.
a = e_x/l
e_x = horizontal component of eccentricity of P with respect to centroid of weld group, in.
C = coefficient tabulated below
C_1 = electrode strength coefficient from Table 8-3 (1.0 for E70XX electrodes)

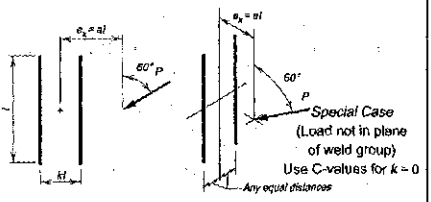

a	k															
	0	0.1	0.2	0.3	0.4	0.5	0.6	0.7	0.8	0.9	1.0	1.2	1.4	1.6	1.8	2.0
0.00	5.21	5.21	5.21	5.21	5.21	5.21	5.21	5.21	5.21	5.21	5.21	5.21	5.21	5.21	5.21	5.21
0.10	4.86	4.87	4.90	4.94	4.99	5.03	5.07	5.10	5.12	5.13	5.14	5.15	5.15	5.15	5.15	5.15
0.15	4.61	4.62	4.65	4.70	4.77	4.84	4.91	4.96	5.01	5.04	5.07	5.10	5.12	5.13	5.14	5.14
0.20	4.36	4.37	4.41	4.46	4.54	4.62	4.71	4.79	4.86	4.92	4.97	5.03	5.07	5.09	5.11	5.12
0.25	4.13	4.14	4.17	4.23	4.31	4.40	4.51	4.61	4.70	4.78	4.84	4.94	5.00	5.04	5.06	5.08
0.30	3.93	3.94	3.97	4.03	4.10	4.19	4.30	4.41	4.52	4.62	4.70	4.83	4.91	4.97	5.01	5.04
0.40	3.58	3.59	3.62	3.68	3.75	3.84	3.93	4.04	4.15	4.27	4.39	4.57	4.71	4.81	4.88	4.93
0.50	3.26	3.27	3.31	3.37	3.45	3.54	3.64	3.74	3.84	3.95	4.07	4.29	4.47	4.61	4.71	4.79
0.60	2.98	2.99	3.03	3.10	3.19	3.28	3.39	3.49	3.59	3.69	3.78	4.01	4.22	4.39	4.52	4.63
0.70	2.74	2.75	2.79	2.86	2.95	3.05	3.16	3.26	3.37	3.47	3.56	3.76	3.97	4.16	4.32	4.45
0.80	2.52	2.53	2.58	2.65	2.75	2.85	2.96	3.06	3.17	3.27	3.37	3.55	3.74	3.94	4.11	4.26
0.90	2.34	2.35	2.39	2.47	2.56	2.67	2.78	2.88	2.99	3.09	3.19	3.37	3.54	3.72	3.90	4.07
1.0	2.17	2.18	2.23	2.31	2.40	2.50	2.61	2.72	2.83	2.93	3.03	3.21	3.37	3.54	3.71	3.88
1.2	1.89	1.90	1.95	2.03	2.12	2.23	2.33	2.44	2.54	2.65	2.74	2.93	3.09	3.24	3.39	3.54
1.4	1.67	1.69	1.73	1.81	1.90	2.00	2.10	2.20	2.31	2.41	2.50	2.68	2.85	2.99	3.13	3.27
1.6	1.50	1.51	1.56	1.63	1.71	1.81	1.91	2.01	2.11	2.20	2.30	2.47	2.63	2.78	2.92	3.05
1.8	1.35	1.36	1.41	1.48	1.56	1.65	1.74	1.84	1.94	2.03	2.12	2.29	2.45	2.60	2.73	2.85
2.0	1.23	1.24	1.29	1.35	1.43	1.51	1.60	1.70	1.79	1.88	1.97	2.13	2.29	2.43	2.56	2.69
2.2	1.13	1.14	1.18	1.24	1.32	1.40	1.48	1.57	1.66	1.75	1.83	1.99	2.14	2.28	2.41	2.54
2.4	1.04	1.06	1.10	1.15	1.22	1.30	1.38	1.46	1.55	1.63	1.71	1.87	2.02	2.15	2.28	2.40
2.6	0.970	0.981	1.02	1.07	1.14	1.21	1.29	1.37	1.45	1.53	1.61	1.76	1.90	2.03	2.16	2.28
2.8	0.905	0.916	0.951	1.00	1.06	1.13	1.21	1.29	1.36	1.44	1.51	1.66	1.80	1.93	2.05	2.16
3.0	0.848	0.859	0.892	0.941	1.00	1.07	1.14	1.21	1.28	1.36	1.43	1.57	1.70	1.83	1.95	2.06

Shaded values indicate the value is based on the greatest available strength permitted by AISC *Specification* Sections J2.4, J2.4(a), J2.4(b) and J2.4(c).

Table 8-4 (continued)
Coefficients, C, for Eccentrically Loaded Weld Groups
Angle = 75°

Available strength of a weld group, ϕR_n or R_n/Ω, is determined with
$R_n = CC_1Dl$ ($\phi = 0.75$, $\Omega = 2.00$)

LRFD	ASD
$C_{min} = \frac{P_u}{\phi C_1 Dl} \quad D_{min} = \frac{P_u}{\phi C C_1 l} \quad l_{min} = \frac{P_u}{\phi C C_1 D}$	$C_{min} = \frac{\Omega P_a}{C_1 Dl} \quad D_{min} = \frac{\Omega P_a}{C C_1 l} \quad l_{min} = \frac{\Omega P_a}{C C_1 D}$

where
P = required force, P_u or P_a, kips
D = number of sixteenths-of-an-inch in the fillet weld size
l = characteristic length of weld group, in.
$a = e_x/l$
e_x = horizontal component of eccentricity of P with respect to centroid of weld group, in.
C = coefficient tabulated below
C_1 = electrode strength coefficient from Table 8-3 (1.0 for E70XX electrodes)

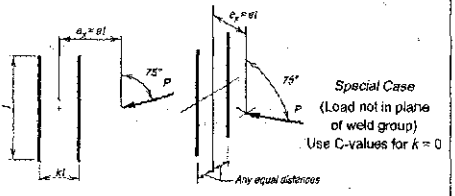

a	k															
	0	0.1	0.2	0.3	0.4	0.5	0.6	0.7	0.8	0.9	1.0	1.2	1.4	1.6	1.8	2.0
0.00	5.47	5.47	5.47	5.47	5.47	5.47	5.47	5.47	5.47	5.47	5.47	5.47	5.47	5.47	5.47	5.47
0.10	5.17	5.19	5.25	5.32	5.38	5.42	5.44	5.45	5.45	5.46	5.46	5.46	5.46	5.46	5.45	5.45
0.15	5.00	5.03	5.10	5.19	5.28	5.34	5.38	5.41	5.43	5.44	5.45	5.45	5.45	5.45	5.45	5.45
0.20	4.85	4.87	4.95	5.06	5.16	5.25	5.32	5.36	5.39	5.41	5.42	5.44	5.45	5.45	5.45	5.45
0.25	4.71	4.73	4.80	4.92	5.04	5.15	5.24	5.30	5.34	5.37	5.39	5.42	5.43	5.44	5.44	5.45
0.30	4.57	4.59	4.65	4.78	4.92	5.04	5.15	5.23	5.28	5.33	5.36	5.40	5.42	5.43	5.44	5.44
0.40	4.32	4.33	4.39	4.51	4.67	4.82	4.95	5.06	5.15	5.22	5.27	5.33	5.37	5.40	5.41	5.42
0.50	4.09	4.11	4.17	4.27	4.43	4.60	4.76	4.89	5.00	5.09	5.16	5.25	5.32	5.35	5.38	5.40
0.60	3.88	3.90	3.96	4.07	4.21	4.38	4.56	4.71	4.84	4.95	5.04	5.16	5.25	5.30	5.34	5.36
0.70	3.69	3.71	3.77	3.87	4.01	4.18	4.36	4.53	4.68	4.80	4.91	5.06	5.17	5.24	5.29	5.33
0.80	3.51	3.53	3.59	3.70	3.83	3.99	4.17	4.35	4.51	4.65	4.77	4.96	5.08	5.17	5.24	5.28
0.90	3.34	3.36	3.42	3.53	3.66	3.81	3.99	4.18	4.35	4.50	4.64	4.84	4.99	5.10	5.17	5.23
1.0	3.18	3.20	3.27	3.37	3.50	3.65	3.83	4.01	4.19	4.35	4.49	4.73	4.90	5.02	5.11	5.18
1.2	2.90	2.92	2.99	3.09	3.22	3.37	3.53	3.70	3.88	4.06	4.22	4.49	4.69	4.85	4.97	5.06
1.4	2.65	2.67	2.74	2.85	2.97	3.11	3.27	3.43	3.61	3.78	3.95	4.24	4.48	4.67	4.81	4.92
1.6	2.44	2.46	2.53	2.63	2.75	2.89	3.04	3.19	3.36	3.53	3.70	4.01	4.27	4.48	4.65	4.78
1.8	2.26	2.27	2.34	2.44	2.56	2.69	2.84	2.99	3.14	3.30	3.47	3.78	4.06	4.29	4.48	4.63
2.0	2.09	2.11	2.18	2.27	2.39	2.52	2.66	2.80	2.95	3.10	3.26	3.57	3.86	4.10	4.31	4.48
2.2	1.95	1.97	2.03	2.13	2.24	2.36	2.50	2.63	2.78	2.92	3.07	3.38	3.66	3.92	4.14	4.32
2.4	1.82	1.84	1.90	1.99	2.10	2.22	2.35	2.48	2.62	2.76	2.90	3.20	3.48	3.74	3.97	4.16
2.6	1.71	1.73	1.79	1.88	1.98	2.10	2.22	2.35	2.48	2.62	2.75	3.04	3.31	3.57	3.80	4.01
2.8	1.61	1.63	1.69	1.77	1.87	1.98	2.10	2.23	2.36	2.49	2.62	2.88	3.16	3.41	3.64	3.85
3.0	1.52	1.54	1.60	1.68	1.77	1.88	2.00	2.12	2.24	2.37	2.49	2.75	3.01	3.26	3.49	3.71

Shaded values indicate the value is based on the greatest available strength permitted by AISC *Specification* Sections J2.4, J2.4(a), J2.4(b) and J2.4(c).

Table 8-5
Coefficients, C, for Eccentrically Loaded Weld Groups
Angle = 0°

Available strength of a weld group, ϕR_n or R_n/Ω, is determined with
$R_n = CC_1Dl$ ($\phi = 0.75$, $\Omega = 2.00$)

LRFD	ASD
$C_{min} = \dfrac{P_u}{\phi C_1 Dl}$ $D_{min} = \dfrac{P_u}{\phi C C_1 l}$ $l_{min} = \dfrac{P_u}{\phi C C_1 D}$	$C_{min} = \dfrac{\Omega P_a}{C_1 Dl}$ $D_{min} = \dfrac{\Omega P_a}{C C_1 l}$ $l_{min} = \dfrac{\Omega P_a}{C C_1 D}$

where
P = required force, P_u or P_a, kips
D = number of sixteenths-of-an-inch in the fillet weld size
l = characteristic length of weld group, in.
$a = e_x/l$
e_x = horizontal component of eccentricity of P with respect to centroid of weld group, in.
C = coefficient tabulated below
C_1 = electrode strength coefficient from Table 8-3 (1.0 for E70XX electrodes)

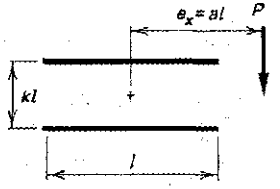

a	k															
	0	0.1	0.2	0.3	0.4	0.5	0.6	0.7	0.8	0.9	1.0	1.2	1.4	1.6	1.8	2.0
0.00	5.57	5.57	5.57	5.57	5.57	5.57	5.57	5.57	5.57	5.57	5.57	5.57	5.57	5.57	5.57	5.57
0.10	4.32	4.36	4.48	4.65	4.82	4.97	5.11	5.21	5.29	5.35	5.39	5.45	5.48	5.50	5.52	5.53
0.15	3.90	3.94	4.04	4.20	4.39	4.58	4.75	4.90	5.02	5.12	5.20	5.31	5.38	5.42	5.45	5.48
0.20	3.54	3.57	3.67	3.81	3.99	4.20	4.40	4.57	4.73	4.86	4.97	5.13	5.24	5.32	5.37	5.41
0.25	3.22	3.25	3.34	3.47	3.64	3.85	4.06	4.26	4.43	4.59	4.72	4.93	5.08	5.19	5.26	5.32
0.30	2.94	2.97	3.06	3.19	3.34	3.53	3.74	3.95	4.14	4.32	4.47	4.72	4.91	5.04	5.14	5.22
0.40	2.48	2.51	2.60	2.71	2.85	3.01	3.19	3.40	3.61	3.81	3.99	4.29	4.54	4.72	4.87	4.99
0.50	2.14	2.17	2.24	2.34	2.47	2.62	2.78	2.95	3.15	3.35	3.54	3.88	4.16	4.39	4.58	4.73
0.60	1.87	1.89	1.96	2.06	2.17	2.31	2.45	2.61	2.78	2.96	3.15	3.50	3.81	4.06	4.28	4.46
0.70	1.65	1.68	1.74	1.83	1.93	2.06	2.19	2.33	2.48	2.64	2.81	3.17	3.48	3.75	3.99	4.19
0.80	1.48	1.50	1.56	1.64	1.74	1.85	1.97	2.10	2.24	2.38	2.54	2.87	3.18	3.46	3.71	3.92
0.90	1.34	1.36	1.41	1.49	1.58	1.68	1.79	1.91	2.04	2.17	2.31	2.61	2.92	3.20	3.45	3.68
1.0	1.22	1.24	1.29	1.36	1.44	1.54	1.64	1.75	1.87	1.99	2.12	2.39	2.69	2.97	3.22	3.45
1.2	1.04	1.05	1.10	1.16	1.23	1.31	1.41	1.50	1.60	1.71	1.82	2.05	2.30	2.56	2.81	3.03
1.4	0.900	0.914	0.952	1.00	1.07	1.14	1.23	1.31	1.40	1.49	1.59	1.79	2.00	2.24	2.47	2.69
1.6	0.794	0.807	0.840	0.888	0.946	1.01	1.08	1.16	1.24	1.33	1.41	1.59	1.78	1.98	2.19	2.40
1.8	0.710	0.722	0.752	0.795	0.848	0.907	0.973	1.04	1.12	1.19	1.27	1.43	1.60	1.77	1.96	2.16
2.0	0.643	0.653	0.680	0.719	0.767	0.822	0.881	0.945	1.01	1.08	1.15	1.30	1.45	1.61	1.77	1.95
2.2	0.586	0.596	0.621	0.657	0.701	0.751	0.805	0.864	0.925	0.988	1.05	1.19	1.33	1.47	1.62	1.78
2.4	0.539	0.548	0.571	0.604	0.644	0.691	0.741	0.795	0.852	0.910	0.970	1.09	1.22	1.35	1.49	1.64
2.6	0.498	0.507	0.528	0.559	0.597	0.640	0.687	0.737	0.789	0.844	0.899	1.01	1.13	1.26	1.38	1.51
2.8	0.464	0.472	0.491	0.520	0.555	0.595	0.639	0.686	0.735	0.786	0.838	0.946	1.06	1.17	1.29	1.41
3.0	0.434	0.441	0.459	0.486	0.519	0.557	0.598	0.642	0.688	0.736	0.785	0.886	0.990	1.10	1.21	1.32

Shaded values indicate the value is based on the greatest available strength permitted by AISC *Specification* Sections J2.4, J2.4(a), J2.4(b) and J2.4(c).

Table 8-5 (continued)
Coefficients, C, for Eccentrically Loaded Weld Groups
Angle = 15°

Available strength of a weld group, ϕR_n or R_n/Ω, is determined with
$R_n = CC_1Dl$ ($\phi = 0.75$, $\Omega = 2.00$)

LRFD	ASD
$C_{min} = \dfrac{P_u}{\phi C_1 Dl}$ $D_{min} = \dfrac{P_u}{\phi C C_1 l}$ $l_{min} = \dfrac{P_u}{\phi C C_1 D}$	$C_{min} = \dfrac{\Omega P_a}{C_1 Dl}$ $D_{min} = \dfrac{\Omega P_a}{C C_1 l}$ $l_{min} = \dfrac{\Omega P_a}{C C_1 D}$

where
P = required force, P_u or P_a, kips
D = number of sixteenths-of-an-inch in the fillet weld size
l = characteristic length of weld group, in.
$a = e_x/l$
e_x = horizontal component of eccentricity of P with respect to centroid of weld group, in.
C = coefficient tabulated below
C_1 = electrode strength coefficient from Table 8-3 (1.0 for E70XX electrodes)

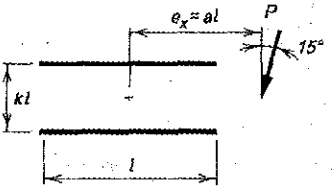

a	k															
	0	0.1	0.2	0.3	0.4	0.5	0.6	0.7	0.8	0.9	1.0	1.2	1.4	1.6	1.8	2.0
0.00	5.47	5.47	5.47	5.47	5.47	5.47	5.47	5.47	5.47	5.47	5.47	5.47	5.47	5.47	5.47	5.47
0.10	4.38	4.40	4.46	4.58	4.73	4.88	5.01	5.11	5.19	5.25	5.29	5.35	5.39	5.41	5.42	5.43
0.15	3.97	3.98	4.04	4.15	4.29	4.47	4.64	4.78	4.91	5.01	5.09	5.20	5.28	5.32	5.36	5.38
0.20	3.60	3.62	3.69	3.79	3.92	4.09	4.27	4.45	4.60	4.74	4.85	5.01	5.13	5.21	5.27	5.31
0.25	3.29	3.30	3.37	3.48	3.61	3.76	3.94	4.12	4.29	4.45	4.59	4.81	4.96	5.07	5.15	5.21
0.30	3.01	3.03	3.09	3.20	3.33	3.48	3.64	3.82	4.00	4.17	4.33	4.58	4.78	4.92	5.03	5.11
0.40	2.55	2.57	2.64	2.74	2.87	3.01	3.16	3.32	3.49	3.66	3.83	4.13	4.38	4.58	4.74	4.86
0.50	2.20	2.22	2.29	2.38	2.50	2.63	2.77	2.92	3.07	3.23	3.40	3.71	3.99	4.23	4.42	4.58
0.60	1.92	1.94	2.01	2.10	2.21	2.33	2.47	2.60	2.74	2.89	3.04	3.35	3.63	3.88	4.10	4.29
0.70	1.71	1.72	1.78	1.87	1.97	2.09	2.21	2.34	2.47	2.61	2.74	3.03	3.30	3.56	3.79	4.00
0.80	1.53	1.55	1.60	1.68	1.78	1.89	2.00	2.12	2.25	2.37	2.50	2.76	3.02	3.27	3.50	3.72
0.90	1.38	1.40	1.45	1.53	1.62	1.72	1.83	1.94	2.06	2.18	2.29	2.53	2.77	3.02	3.24	3.46
1.0	1.26	1.28	1.33	1.40	1.48	1.58	1.68	1.79	1.90	2.01	2.12	2.34	2.56	2.79	3.01	3.22
1.2	1.07	1.09	1.13	1.19	1.26	1.35	1.44	1.53	1.63	1.73	1.83	2.03	2.23	2.42	2.63	2.82
1.4	0.931	0.944	0.982	1.04	1.10	1.18	1.26	1.34	1.43	1.52	1.61	1.79	1.97	2.14	2.32	2.50
1.6	0.822	0.834	0.868	0.916	0.975	1.04	1.12	1.19	1.27	1.35	1.43	1.60	1.76	1.92	2.08	2.24
1.8	0.735	0.746	0.777	0.821	0.874	0.935	1.00	1.07	1.14	1.22	1.29	1.44	1.59	1.74	1.88	2.03
2.0	0.665	0.675	0.703	0.743	0.792	0.848	0.909	0.973	1.04	1.11	1.18	1.31	1.45	1.59	1.72	1.85
2.2	0.607	0.616	0.642	0.678	0.723	0.775	0.831	0.890	0.951	1.01	1.08	1.21	1.33	1.46	1.58	1.71
2.4	0.558	0.566	0.590	0.624	0.666	0.713	0.765	0.820	0.877	0.935	0.994	1.11	1.23	1.35	1.47	1.58
2.6	0.516	0.524	0.546	0.578	0.617	0.661	0.709	0.760	0.813	0.867	0.922	1.03	1.15	1.26	1.37	1.47
2.8	0.480	0.488	0.508	0.538	0.574	0.615	0.660	0.708	0.758	0.808	0.860	0.965	1.07	1.17	1.28	1.38
3.0	0.449	0.456	0.475	0.503	0.537	0.576	0.618	0.663	0.709	0.757	0.806	0.905	1.00	1.10	1.20	1.30

Shaded values indicate the value is based on the greatest available strength permitted by AISC *Specification* Sections J2.4, J2.4(a), J2.4(b) and J2.4(c).

Table 8-5 (continued)
Coefficients, C, for Eccentrically Loaded Weld Groups
Angle = 30°

Available strength of a weld group, ϕR_n or R_n/Ω, is determined with
$R_n = CC_1Dl$ ($\phi = 0.75$, $\Omega = 2.00$)

LRFD	ASD
$C_{min} = \frac{P_u}{\phi C_1 Dl}$ $D_{min} = \frac{P_u}{\phi C C_1 l}$ $l_{min} = \frac{P_u}{\phi C C_1 D}$	$C_{min} = \frac{\Omega P_a}{C_1 Dl}$ $D_{min} = \frac{\Omega P_a}{C C_1 l}$ $l_{min} = \frac{\Omega P_a}{C C_1 D}$

where
P = required force, P_u or P_a, kips
D = number of sixteenths-of-an-inch in the fillet weld size
l = characteristic length of weld group, in.
a = e_x/l
e_x = horizontal component of eccentricity of P with respect to centroid of weld group, in.
C = coefficient tabulated below
C_1 = electrode strength coefficient from Table 8-3 (1.0 for E70XX electrodes)

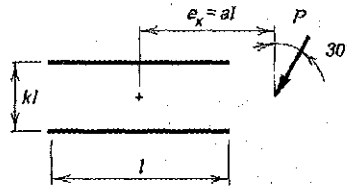

	k															
a	0	0.1	0.2	0.3	0.4	0.5	0.6	0.7	0.8	0.9	1.0	1.2	1.4	1.6	1.8	2.0
0.00	5.21	5.21	5.21	5.21	5.21	5.21	5.21	5.21	5.21	5.21	5.21	5.21	5.21	5.21	5.21	5.21
0.10	4.49	4.50	4.54	4.59	4.66	4.74	4.82	4.89	4.94	4.99	5.02	5.07	5.10	5.11	5.12	5.13
0.15	4.09	4.10	4.13	4.19	4.27	4.36	4.46	4.57	4.66	4.75	4.81	4.91	4.98	5.03	5.05	5.07
0.20	3.76	3.77	3.80	3.86	3.93	4.01	4.12	4.23	4.35	4.46	4.56	4.71	4.82	4.90	4.95	4.99
0.25	3.47	3.48	3.51	3.57	3.65	3.74	3.83	3.93	4.04	4.16	4.28	4.48	4.63	4.74	4.83	4.89
0.30	3.21	3.21	3.25	3.32	3.40	3.49	3.59	3.69	3.79	3.89	4.01	4.24	4.42	4.57	4.68	4.76
0.40	2.76	2.77	2.81	2.88	2.97	3.07	3.17	3.28	3.38	3.48	3.58	3.77	3.99	4.18	4.33	4.46
0.50	2.40	2.41	2.45	2.53	2.62	2.73	2.84	2.94	3.05	3.15	3.25	3.43	3.60	3.79	3.97	4.13
0.60	2.11	2.12	2.17	2.25	2.34	2.45	2.55	2.66	2.77	2.87	2.97	3.15	3.31	3.47	3.64	3.81
0.70	1.88	1.89	1.94	2.01	2.11	2.21	2.32	2.42	2.53	2.63	2.73	2.91	3.07	3.22	3.37	3.52
0.80	1.69	1.70	1.75	1.82	1.91	2.01	2.12	2.22	2.32	2.42	2.52	2.70	2.86	3.01	3.15	3.28
0.90	1.53	1.54	1.59	1.66	1.75	1.84	1.94	2.05	2.15	2.24	2.34	2.51	2.68	2.82	2.96	3.09
1.0	1.40	1.41	1.46	1.53	1.61	1.70	1.80	1.89	1.99	2.09	2.18	2.35	2.51	2.66	2.79	2.92
1.2	1.19	1.20	1.24	1.31	1.38	1.47	1.55	1.65	1.74	1.83	1.91	2.08	2.23	2.37	2.50	2.62
1.4	1.03	1.05	1.08	1.14	1.21	1.29	1.37	1.45	1.54	1.62	1.70	1.85	2.00	2.14	2.26	2.38
1.6	0.914	0.925	0.960	1.01	1.07	1.14	1.22	1.30	1.37	1.45	1.53	1.67	1.81	1.94	2.06	2.18
1.8	0.818	0.829	0.861	0.908	0.965	1.03	1.10	1.17	1.24	1.31	1.38	1.52	1.65	1.78	1.90	2.01
2.0	0.740	0.750	0.780	0.823	0.876	0.935	0.999	1.07	1.13	1.20	1.27	1.40	1.52	1.64	1.75	1.86
2.2	0.675	0.685	0.712	0.752	0.801	0.856	0.915	0.978	1.04	1.10	1.17	1.29	1.41	1.52	1.63	1.73
2.4	0.621	0.630	0.656	0.693	0.738	0.789	0.845	0.902	0.961	1.02	1.08	1.19	1.31	1.41	1.52	1.62
2.6	0.575	0.583	0.607	0.642	0.684	0.732	0.784	0.838	0.893	0.948	1.00	1.11	1.22	1.32	1.42	1.52
2.8	0.535	0.543	0.565	0.598	0.637	0.682	0.731	0.782	0.834	0.886	0.939	1.04	1.14	1.24	1.34	1.43
3.0	0.500	0.508	0.529	0.559	0.596	0.639	0.684	0.732	0.781	0.831	0.881	0.980	1.08	1.17	1.26	1.35

Shaded values indicate the value is based on the greatest available strength permitted by AISC *Specification* Sections J2.4, J2.4(a), J2.4(b) and J2.4(c).

Table 8-5 (continued)
Coefficients, C, for Eccentrically Loaded Weld Groups
Angle = 45°

Available strength of a weld group, ϕR_n or R_n/Ω, is determined with
$R_n = CC_1Dl$ ($\phi = 0.75$, $\Omega = 2.00$)

LRFD			ASD		
$C_{min} = \frac{P_u}{\phi C_1 Dl}$	$D_{min} = \frac{P_u}{\phi C C_1 l}$	$l_{min} = \frac{P_u}{\phi C C_1 D}$	$C_{min} = \frac{\Omega P_a}{C_1 Dl}$	$D_{min} = \frac{\Omega P_a}{C C_1 l}$	$l_{min} = \frac{\Omega P_a}{C C_1 D}$

where
P = required force, P_u or P_a, kips
D = number of sixteenths-of-an-inch in the fillet weld size
l = characteristic length of weld group, in.
a = e_x/l
e_x = horizontal component of eccentricity of P with respect to centroid of weld group, in.
C = coefficient tabulated below
C_1 = electrode strength coefficient from Table 8-3 (1.0 for E70XX electrodes)

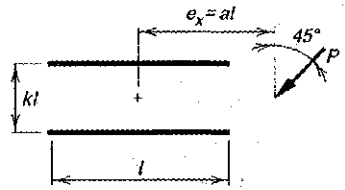

a	k															
	0	0.1	0.2	0.3	0.4	0.5	0.6	0.7	0.8	0.9	1.0	1.2	1.4	1.6	1.8	2.0
0.00	4.82	4.82	4.82	4.82	4.82	4.82	4.82	4.82	4.82	4.82	4.82	4.82	4.82	4.82	4.82	4.82
0.10	4.49	4.49	4.50	4.51	4.53	4.55	4.57	4.59	4.61	4.62	4.63	4.66	4.67	4.68	4.69	4.69
0.15	4.18	4.18	4.20	4.23	4.26	4.30	4.34	4.37	4.40	4.43	4.46	4.50	4.54	4.57	4.60	4.61
0.20	3.92	3.92	3.94	3.96	3.99	4.03	4.08	4.13	4.18	4.22	4.26	4.33	4.38	4.43	4.47	4.50
0.25	3.70	3.70	3.71	3.74	3.77	3.81	3.86	3.91	3.96	4.01	4.06	4.14	4.21	4.27	4.33	4.37
0.30	3.49	3.49	3.51	3.54	3.57	3.62	3.67	3.72	3.77	3.81	3.86	3.96	4.04	4.12	4.18	4.23
0.40	3.10	3.10	3.12	3.16	3.21	3.27	3.33	3.39	3.45	3.50	3.55	3.64	3.73	3.82	3.90	3.96
0.50	2.75	2.76	2.79	2.83	2.89	2.96	3.03	3.10	3.17	3.24	3.29	3.39	3.48	3.56	3.64	3.72
0.60	2.46	2.47	2.50	2.55	2.62	2.70	2.77	2.85	2.93	3.00	3.06	3.17	3.27	3.36	3.43	3.50
0.70	2.21	2.22	2.26	2.31	2.39	2.47	2.55	2.63	2.71	2.79	2.85	2.98	3.08	3.17	3.25	3.33
0.80	2.01	2.01	2.05	2.11	2.19	2.27	2.35	2.44	2.52	2.60	2.67	2.80	2.91	3.01	3.09	3.17
0.90	1.83	1.84	1.88	1.94	2.01	2.10	2.18	2.27	2.35	2.43	2.51	2.64	2.75	2.85	2.95	3.03
1.0	1.68	1.69	1.73	1.79	1.87	1.95	2.04	2.12	2.20	2.28	2.36	2.49	2.61	2.72	2.81	2.89
1.2	1.44	1.45	1.49	1.55	1.62	1.70	1.79	1.87	1.95	2.03	2.11	2.24	2.36	2.47	2.57	2.66
1.4	1.25	1.26	1.30	1.36	1.43	1.51	1.59	1.67	1.75	1.83	1.90	2.03	2.15	2.26	2.36	2.45
1.6	1.11	1.12	1.16	1.21	1.28	1.35	1.43	1.51	1.58	1.66	1.73	1.86	1.98	2.09	2.19	2.28
1.8	0.996	1.01	1.04	1.09	1.15	1.22	1.30	1.37	1.44	1.51	1.58	1.71	1.82	1.93	2.03	2.12
2.0	0.902	0.911	0.944	0.993	1.05	1.12	1.19	1.26	1.32	1.39	1.46	1.58	1.69	1.80	1.90	1.99
2.2	0.824	0.833	0.864	0.910	0.965	1.03	1.09	1.16	1.22	1.29	1.35	1.47	1.58	1.68	1.78	1.87
2.4	0.758	0.767	0.796	0.839	0.891	0.949	1.01	1.07	1.14	1.20	1.26	1.37	1.48	1.58	1.67	1.76
2.6	0.702	0.711	0.738	0.778	0.827	0.882	0.940	1.00	1.06	1.12	1.17	1.28	1.39	1.49	1.58	1.66
2.8	0.653	0.662	0.688	0.726	0.772	0.823	0.879	0.936	0.992	1.05	1.10	1.21	1.31	1.40	1.49	1.58
3.0	0.611	0.619	0.644	0.680	0.723	0.772	0.825	0.879	0.932	0.986	1.04	1.14	1.24	1.33	1.42	1.50

Shaded values indicate the value is based on the greatest available strength permitted by AISC *Specification* Sections J2.4, J2.4(a), J2.4(b) and J2.4(c).

Table 8-5 (continued)
Coefficients, C, for Eccentrically Loaded Weld Groups
Angle = 60°

Available strength of a weld group, ϕR_n or R_n/Ω, is determined with
$R_n = CC_1Dl$ ($\phi = 0.75$, $\Omega = 2.00$)

LRFD	ASD
$C_{min} = \frac{P_u}{\phi C_1 Dl}$ $D_{min} = \frac{P_u}{\phi C C_1 l}$ $l_{min} = \frac{P_u}{\phi C C_1 D}$	$C_{min} = \frac{\Omega P_a}{C_1 Dl}$ $D_{min} = \frac{\Omega P_a}{C C_1 l}$ $l_{min} = \frac{\Omega P_a}{C C_1 D}$

where
P = required force, P_u or P_a, kips
D = number of sixteenths-of-an-inch in the fillet weld size
l = characteristic length of weld group, in.
a = e_x/l
e_x = horizontal component of eccentricity of P with respect to centroid of weld group, in.
C = coefficient tabulated below
C_1 = electrode strength coefficient from Table 8-3 (1.0 for E70XX electrodes)

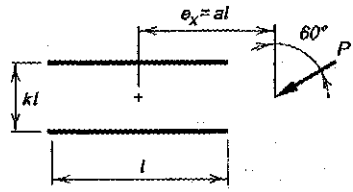

a	k															
	0	0.1	0.2	0.3	0.4	0.5	0.6	0.7	0.8	0.9	1.0	1.2	1.4	1.6	1.8	2.0
0.00	4.37	4.37	4.37	4.37	4.37	4.37	4.37	4.37	4.37	4.37	4.37	4.37	4.37	4.37	4.37	4.37
0.10	4.26	4.26	4.26	4.25	4.25	4.25	4.25	4.24	4.24	4.23	4.23	4.22	4.21	4.20	4.19	4.17
0.15	4.12	4.12	4.13	4.13	4.13	4.13	4.13	4.14	4.14	4.14	4.13	4.13	4.13	4.12	4.11	4.10
0.20	3.97	3.97	3.97	3.97	3.98	3.98	3.99	4.00	4.01	4.01	4.02	4.03	4.03	4.03	4.03	4.02
0.25	3.86	3.86	3.86	3.86	3.86	3.86	3.87	3.87	3.88	3.89	3.90	3.92	3.93	3.94	3.94	3.94
0.30	3.74	3.74	3.74	3.75	3.75	3.76	3.76	3.77	3.78	3.78	3.79	3.81	3.83	3.84	3.85	3.86
0.40	3.51	3.51	3.51	3.52	3.54	3.55	3.56	3.57	3.59	3.60	3.61	3.63	3.65	3.67	3.69	3.70
0.50	3.26	3.26	3.27	3.29	3.31	3.34	3.36	3.38	3.40	3.42	3.44	3.48	3.50	3.53	3.55	3.57
0.60	3.02	3.02	3.04	3.06	3.09	3.13	3.17	3.20	3.23	3.26	3.28	3.33	3.36	3.40	3.42	3.45
0.70	2.80	2.80	2.81	2.85	2.89	2.93	2.98	3.02	3.06	3.09	3.13	3.18	3.23	3.27	3.30	3.33
0.80	2.59	2.59	2.61	2.65	2.70	2.75	2.80	2.85	2.90	2.94	2.98	3.05	3.10	3.15	3.19	3.23
0.90	2.40	2.40	2.43	2.47	2.52	2.58	2.64	2.70	2.75	2.80	2.84	2.92	2.98	3.04	3.09	3.13
1.0	2.23	2.23	2.26	2.31	2.36	2.43	2.49	2.56	2.61	2.67	2.71	2.80	2.87	2.93	2.98	3.03
1.2	1.94	1.95	1.98	2.03	2.09	2.16	2.23	2.30	2.37	2.43	2.48	2.58	2.66	2.73	2.79	2.85
1.4	1.72	1.72	1.75	1.81	1.87	1.95	2.02	2.09	2.16	2.23	2.28	2.39	2.48	2.56	2.62	2.68
1.6	1.53	1.54	1.57	1.63	1.69	1.77	1.84	1.91	1.98	2.05	2.11	2.22	2.31	2.40	2.47	2.53
1.8	1.38	1.39	1.42	1.48	1.54	1.62	1.69	1.76	1.83	1.90	1.96	2.07	2.17	2.25	2.33	2.40
2.0	1.25	1.26	1.30	1.35	1.42	1.49	1.56	1.63	1.70	1.77	1.83	1.94	2.04	2.13	2.21	2.28
2.2	1.15	1.16	1.19	1.24	1.31	1.38	1.45	1.52	1.59	1.65	1.71	1.82	1.92	2.01	2.09	2.17
2.4	1.06	1.07	1.10	1.15	1.21	1.28	1.35	1.42	1.48	1.55	1.61	1.72	1.82	1.91	1.99	2.06
2.6	0.983	0.991	1.02	1.07	1.13	1.20	1.26	1.33	1.39	1.46	1.51	1.62	1.72	1.81	1.90	1.97
2.8	0.917	0.925	0.956	1.00	1.06	1.12	1.19	1.25	1.31	1.37	1.43	1.54	1.64	1.73	1.81	1.88
3.0	0.858	0.866	0.897	0.942	0.996	1.06	1.12	1.18	1.24	1.30	1.36	1.46	1.56	1.65	1.73	1.81

Shaded values indicate the value is based on the greatest available strength permitted by AISC *Specification* Sections J2.4, J2.4(a), J2.4(b) and J2.4(c).

Table 8-5 (continued)
Coefficients, C, for Eccentrically Loaded Weld Groups
Angle = 75°

Available strength of a weld group, ϕR_n or R_n/Ω, is determined with
$R_n = CC_1Dl$ ($\phi = 0.75$, $\Omega = 2.00$)

LRFD	ASD
$C_{min} = \frac{P_u}{\phi C_1 Dl}$ $D_{min} = \frac{P_u}{\phi C C_1 l}$ $l_{min} = \frac{P_u}{\phi C C_1 D}$	$C_{min} = \frac{\Omega P_a}{C_1 Dl}$ $D_{min} = \frac{\Omega P_a}{C C_1 l}$ $l_{min} = \frac{\Omega P_a}{C C_1 D}$

where
P = required force, P_u or P_a, kips
D = number of sixteenths-of-an-inch in the fillet weld size
l = characteristic length of weld group, in.
$a = e_x/l$
e_x = horizontal component of eccentricity of P with respect to centroid of weld group, in.
C = coefficient tabulated below
C_1 = electrode strength coefficient from Table 8-3 (1.0 for E70XX electrodes)

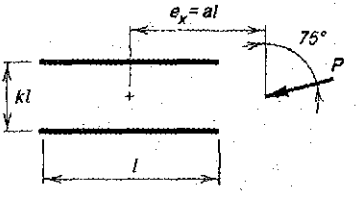

a	k															
	0	0.1	0.2	0.3	0.4	0.5	0.6	0.7	0.8	0.9	1.0	1.2	1.4	1.6	1.8	2.0
0.00	3.96	3.96	3.96	3.96	3.96	3.96	3.96	3.96	3.96	3.96	3.96	3.96	3.96	3.96	3.96	3.96
0.10	3.82	3.83	3.84	3.84	3.85	3.85	3.85	3.85	3.85	3.85	3.85	3.84	3.82	3.80	3.78	3.76
0.15	3.85	3.86	3.86	3.86	3.86	3.85	3.85	3.85	3.84	3.83	3.83	3.81	3.79	3.77	3.75	3.73
0.20	3.84	3.84	3.84	3.84	3.83	3.83	3.82	3.82	3.81	3.80	3.80	3.78	3.76	3.74	3.72	3.71
0.25	3.83	3.83	3.83	3.82	3.82	3.81	3.80	3.80	3.79	3.78	3.77	3.75	3.73	3.72	3.70	3.68
0.30	3.82	3.82	3.81	3.81	3.80	3.79	3.78	3.77	3.76	3.76	3.75	3.73	3.71	3.69	3.67	3.66
0.40	3.78	3.78	3.77	3.76	3.75	3.74	3.73	3.72	3.71	3.70	3.69	3.67	3.66	3.64	3.62	3.61
0.50	3.72	3.72	3.71	3.70	3.69	3.68	3.67	3.66	3.65	3.64	3.64	3.62	3.60	3.59	3.57	3.56
0.60	3.65	3.64	3.64	3.63	3.62	3.61	3.60	3.60	3.59	3.58	3.57	3.56	3.54	3.53	3.52	3.51
0.70	3.56	3.55	3.55	3.54	3.54	3.53	3.52	3.52	3.51	3.51	3.50	3.49	3.48	3.47	3.47	3.46
0.80	3.46	3.45	3.45	3.45	3.45	3.44	3.44	3.44	3.44	3.43	3.43	3.43	3.42	3.42	3.41	3.41
0.90	3.35	3.35	3.35	3.35	3.35	3.35	3.35	3.35	3.35	3.36	3.36	3.36	3.36	3.36	3.36	3.35
1.0	3.23	3.23	3.24	3.24	3.25	3.25	3.26	3.27	3.27	3.28	3.28	3.29	3.30	3.30	3.30	3.30
1.2	3.00	3.00	3.01	3.02	3.04	3.06	3.08	3.09	3.11	3.12	3.14	3.16	3.17	3.19	3.20	3.20
1.4	2.78	2.78	2.79	2.81	2.84	2.87	2.90	2.93	2.95	2.97	2.99	3.02	3.05	3.07	3.09	3.10
1.6	2.57	2.57	2.59	2.62	2.65	2.69	2.73	2.77	2.80	2.83	2.85	2.90	2.93	2.96	2.99	3.01
1.8	2.38	2.38	2.40	2.44	2.48	2.53	2.58	2.62	2.66	2.69	2.72	2.78	2.82	2.86	2.89	2.91
2.0	2.21	2.21	2.24	2.27	2.32	2.38	2.43	2.48	2.52	2.56	2.60	2.66	2.72	2.76	2.80	2.83
2.2	2.05	2.06	2.09	2.13	2.18	2.24	2.30	2.35	2.40	2.44	2.48	2.56	2.61	2.66	2.71	2.74
2.4	1.92	1.92	1.95	2.00	2.05	2.12	2.18	2.24	2.29	2.33	2.38	2.45	2.52	2.57	2.62	2.66
2.6	1.80	1.80	1.83	1.88	1.94	2.00	2.07	2.13	2.18	2.23	2.28	2.36	2.43	2.49	2.54	2.58
2.8	1.69	1.69	1.72	1.77	1.83	1.90	1.97	2.03	2.09	2.14	2.19	2.27	2.35	2.41	2.46	2.51
3.0	1.59	1.60	1.63	1.68	1.74	1.81	1.87	1.94	2.00	2.05	2.10	2.19	2.27	2.33	2.39	2.44

Shaded values indicate the value is based on the greatest available strength permitted by AISC *Specification* Sections J2.4, J2.4(a), J2.4(b) and J2.4(c).

Table 8-6
Coefficients, C, for Eccentrically Loaded Weld Groups
Angle = 0°

Available strength of a weld group, ϕR_n or R_n/Ω, is determined with
$R_n = CC_1Dl$ ($\phi = 0.75$, $\Omega = 2.00$)

LRFD	ASD
$C_{min} = \frac{P_u}{\phi C_1 Dl}$ $D_{min} = \frac{P_u}{\phi C C_1 l}$ $l_{min} = \frac{P_u}{\phi C C_1 D}$	$C_{min} = \frac{\Omega P_a}{C_1 Dl}$ $D_{min} = \frac{\Omega P_a}{C C_1 l}$ $l_{min} = \frac{\Omega P_a}{C C_1 D}$

where
P = required force, P_u or P_a, kips
D = number of sixteenths-of-an-inch in the fillet weld size
l = characteristic length of weld group, in.
$a = e_x/l$
e_x = horizontal component of eccentricity of P with respect to centroid of weld group, in.
C = coefficient tabulated below
C_1 = electrode strength coefficient from Table 8-3 (1.0 for E70XX electrodes)

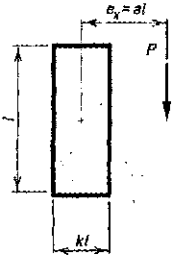

a	k															
	0	0.1	0.2	0.3	0.4	0.5	0.6	0.7	0.8	0.9	1.0	1.2	1.4	1.6	1.8	2.0
0.00	3.71	4.08	4.45	4.83	5.38	5.94	6.50	7.05	7.61	8.17	8.72	9.84	10.9	12.1	13.2	14.3
0.10	3.72	4.09	4.55	5.04	5.54	6.04	6.55	7.07	7.58	8.10	8.62	9.66	10.7	11.8	12.8	13.9
0.15	3.67	4.06	4.49	4.94	5.41	5.89	6.38	6.87	7.36	7.86	8.36	9.36	10.4	11.4	12.4	13.4
0.20	3.51	3.93	4.34	4.77	5.21	5.66	6.13	6.59	7.07	7.54	8.03	9.00	9.98	11.0	12.0	13.0
0.25	3.31	3.72	4.13	4.54	4.96	5.39	5.84	6.29	6.74	7.20	7.67	8.61	9.57	10.5	11.5	12.5
0.30	3.09	3.48	3.89	4.29	4.69	5.11	5.53	5.97	6.41	6.86	7.31	8.23	9.17	10.1	11.1	12.1
0.40	2.66	3.01	3.39	3.77	4.16	4.55	4.94	5.35	5.76	6.19	6.62	7.50	8.40	9.33	10.3	11.2
0.50	2.30	2.60	2.94	3.30	3.67	4.04	4.41	4.79	5.19	5.59	6.00	6.84	7.71	8.61	9.52	10.5
0.60	2.00	2.27	2.57	2.90	3.25	3.60	3.96	4.32	4.69	5.07	5.46	6.27	7.11	7.97	8.86	9.77
0.70	1.76	2.00	2.27	2.57	2.90	3.24	3.57	3.91	4.26	4.63	5.00	5.77	6.58	7.41	8.27	9.15
0.80	1.57	1.78	2.02	2.30	2.61	2.93	3.25	3.57	3.90	4.24	4.60	5.34	6.11	6.91	7.74	8.59
0.90	1.41	1.60	1.82	2.08	2.36	2.67	2.97	3.27	3.59	3.91	4.25	4.95	5.69	6.45	7.25	8.07
1.0	1.28	1.45	1.66	1.90	2.16	2.45	2.73	3.02	3.32	3.62	3.94	4.61	5.31	6.04	6.81	7.60
1.2	1.08	1.22	1.40	1.61	1.84	2.09	2.35	2.61	2.87	3.15	3.43	4.03	4.67	5.34	6.04	6.77
1.4	0.928	1.05	1.21	1.40	1.60	1.83	2.06	2.29	2.53	2.78	3.03	3.58	4.16	4.77	5.42	6.09
1.6	0.815	0.927	1.07	1.23	1.42	1.62	1.83	2.04	2.25	2.48	2.71	3.21	3.74	4.30	4.90	5.53
1.8	0.727	0.827	0.954	1.10	1.27	1.45	1.64	1.83	2.03	2.24	2.45	2.90	3.39	3.92	4.47	5.05
2.0	0.655	0.746	0.861	0.996	1.15	1.31	1.49	1.66	1.85	2.04	2.23	2.65	3.10	3.59	4.10	4.65
2.2	0.597	0.679	0.785	0.908	1.05	1.20	1.36	1.52	1.69	1.87	2.05	2.44	2.86	3.31	3.79	4.30
2.4	0.547	0.623	0.721	0.835	0.963	1.10	1.25	1.41	1.56	1.72	1.89	2.26	2.65	3.07	3.52	4.00
2.6	0.506	0.576	0.666	0.772	0.891	1.02	1.16	1.30	1.45	1.60	1.76	2.10	2.47	2.86	3.29	3.74
2.8	0.470	0.536	0.620	0.718	0.829	0.950	1.08	1.21	1.35	1.49	1.64	1.96	2.31	2.68	3.08	3.50
3.0	0.439	0.500	0.579	0.671	0.775	0.888	1.01	1.14	1.27	1.40	1.54	1.84	2.17	2.52	2.90	3.30

Shaded values indicate the value is based on the greatest available strength permitted by AISC *Specification* Sections J2.4, J2.4(a), J2.4(b) and J2.4(c).

Table 8-6 (continued)
Coefficients, C, for Eccentrically Loaded Weld Groups
Angle = 15°

Available strength of a weld group, ϕR_n or R_n/Ω, is determined with
$R_n = CC_1Dl$ ($\phi = 0.75$, $\Omega = 2.00$)

LRFD	ASD
$C_{min} = \frac{P_u}{\phi C_1 Dl}$ $D_{min} = \frac{P_u}{\phi C C_1 l}$ $l_{min} = \frac{P_u}{\phi C C_1 D}$	$C_{min} = \frac{\Omega P_a}{C_1 Dl}$ $D_{min} = \frac{\Omega P_a}{C C_1 l}$ $l_{min} = \frac{\Omega P_a}{C C_1 D}$

where
P = required force, P_u or P_a, kips
D = number of sixteenths-of-an-inch in the fillet weld size
l = characteristic length of weld group, in.
$a = e_x/l$
e_x = horizontal component of eccentricity of P with respect to centroid of weld group, in.
C = coefficient tabulated below
C_1 = electrode strength coefficient from Table 8-3 (1.0 for E70XX electrodes)

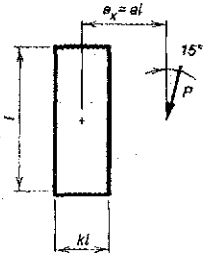

a	k															
	0	0.1	0.2	0.3	0.4	0.5	0.6	0.7	0.8	0.9	1.0	1.2	1.4	1.6	1.8	2.0
0.00	3.96	4.39	4.94	5.48	6.03	6.57	7.12	7.66	8.21	8.75	9.30	10.4	11.5	12.6	13.7	14.7
0.10	3.79	4.22	4.70	5.19	5.70	6.21	6.73	7.25	7.77	8.29	8.82	9.87	10.9	12.0	13.0	14.1
0.15	3.68	4.14	4.59	5.05	5.53	6.01	6.49	6.98	7.48	7.97	8.47	9.47	10.5	11.5	12.5	13.6
0.20	3.51	3.95	4.40	4.85	5.31	5.76	6.23	6.69	7.17	7.64	8.12	9.09	10.1	11.1	12.1	13.1
0.25	3.31	3.72	4.16	4.61	5.04	5.49	5.93	6.38	6.84	7.30	7.76	8.71	9.66	10.6	11.6	12.6
0.30	3.09	3.48	3.90	4.33	4.76	5.19	5.62	6.06	6.50	6.95	7.40	8.32	9.26	10.2	11.2	12.2
0.40	2.68	3.02	3.39	3.79	4.20	4.62	5.02	5.44	5.86	6.29	6.72	7.60	8.51	9.43	10.4	11.3
0.50	2.32	2.62	2.95	3.31	3.70	4.10	4.49	4.88	5.29	5.69	6.10	6.95	7.83	8.73	9.65	10.6
0.60	2.03	2.29	2.59	2.92	3.28	3.65	4.03	4.41	4.79	5.17	5.57	6.39	7.23	8.10	8.99	9.91
0.70	1.79	2.03	2.30	2.60	2.93	3.28	3.64	4.00	4.36	4.73	5.11	5.89	6.70	7.55	8.41	9.30
0.80	1.60	1.81	2.05	2.33	2.64	2.97	3.31	3.65	4.00	4.35	4.71	5.45	6.23	7.04	7.88	8.73
0.90	1.44	1.63	1.86	2.11	2.40	2.71	3.03	3.36	3.68	4.01	4.35	5.07	5.81	6.59	7.39	8.22
1.0	1.31	1.48	1.69	1.93	2.20	2.49	2.80	3.10	3.40	3.72	4.05	4.72	5.43	6.18	6.95	7.75
1.2	1.10	1.25	1.43	1.64	1.88	2.14	2.41	2.68	2.95	3.24	3.53	4.14	4.79	5.47	6.19	6.93
1.4	0.954	1.08	1.24	1.43	1.64	1.87	2.11	2.36	2.60	2.86	3.12	3.68	4.27	4.90	5.56	6.25
1.6	0.839	0.953	1.10	1.26	1.45	1.66	1.87	2.10	2.32	2.55	2.79	3.30	3.85	4.43	5.04	5.68
1.8	0.748	0.850	0.980	1.13	1.30	1.49	1.68	1.89	2.09	2.31	2.53	3.00	3.50	4.03	4.60	5.19
2.0	0.675	0.768	0.885	1.02	1.18	1.35	1.53	1.72	1.90	2.10	2.30	2.74	3.20	3.70	4.23	4.78
2.2	0.615	0.700	0.808	0.934	1.08	1.23	1.40	1.57	1.75	1.93	2.12	2.52	2.95	3.41	3.91	4.43
2.4	0.565	0.642	0.742	0.859	0.990	1.13	1.29	1.45	1.61	1.78	1.96	2.33	2.74	3.17	3.63	4.12
2.6	0.522	0.594	0.687	0.795	0.916	1.05	1.19	1.34	1.50	1.65	1.82	2.17	2.55	2.96	3.39	3.85
2.8	0.485	0.552	0.639	0.739	0.853	0.977	1.11	1.25	1.40	1.54	1.70	2.03	2.38	2.77	3.18	3.61
3.0	0.453	0.516	0.597	0.691	0.798	0.914	1.04	1.17	1.31	1.45	1.59	1.90	2.24	2.60	2.99	3.40

Shaded values indicate the value is based on the greatest available strength permitted by AISC *Specification* Sections J2.4, J2.4(a), J2.4(b) and J2.4(c).

Table 8-6 (continued)
Coefficients, C, for Eccentrically Loaded Weld Groups
Angle = 30°

Available strength of a weld group, ϕR_n or R_n/Ω, is determined with
$R_n = CC_1Dl$ ($\phi = 0.75$, $\Omega = 2.00$)

LRFD	ASD
$C_{min} = \dfrac{P_u}{\phi C_1 Dl}$ $D_{min} = \dfrac{P_u}{\phi C C_1 l}$ $l_{min} = \dfrac{P_u}{\phi C C_1 D}$	$C_{min} = \dfrac{\Omega P_a}{C_1 Dl}$ $D_{min} = \dfrac{\Omega P_a}{C C_1 l}$ $l_{min} = \dfrac{\Omega P_a}{C C_1 D}$

where
P = required force, P_u or P_a, kips
D = number of sixteenths-of-an-inch in the fillet weld size
l = characteristic length of weld group, in.
$a = e_x/l$
e_x = horizontal component of eccentricity of P with respect to centroid of weld group, in.
C = coefficient tabulated below
C_1 = electrode strength coefficient from Table 8-3 (1.0 for E70XX electrodes)

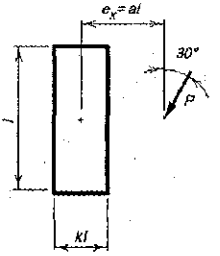

a	k															
	0	0.1	0.2	0.3	0.4	0.5	0.6	0.7	0.8	0.9	1.0	1.2	1.4	1.6	1.8	2.0
0.00	4.37	4.89	5.40	5.91	6.43	6.94	7.46	7.97	8.48	9.00	9.51	10.5	11.6	12.6	13.6	14.7
0.10	4.05	4.60	5.13	5.65	6.16	6.67	7.17	7.68	8.18	8.69	9.20	10.2	11.2	12.3	13.3	14.4
0.15	3.83	4.33	4.85	5.36	5.86	6.36	6.86	7.35	7.85	8.35	8.85	9.85	10.9	11.9	12.9	14.0
0.20	3.64	4.09	4.57	5.06	5.55	6.04	6.52	7.00	7.48	7.97	8.46	9.45	10.4	11.5	12.5	13.5
0.25	3.43	3.85	4.30	4.77	5.24	5.72	6.20	6.66	7.12	7.59	8.06	9.03	10.0	11.0	12.1	13.1
0.30	3.22	3.61	4.03	4.47	4.93	5.40	5.87	6.33	6.78	7.24	7.70	8.64	9.61	10.6	11.6	12.6
0.40	2.81	3.15	3.53	3.93	4.36	4.80	5.25	5.71	6.15	6.59	7.03	7.94	8.86	9.81	10.8	11.8
0.50	2.46	2.77	3.10	3.47	3.86	4.28	4.71	5.15	5.58	6.01	6.44	7.31	8.21	9.14	10.1	11.0
0.60	2.17	2.44	2.75	3.08	3.45	3.84	4.25	4.67	5.09	5.50	5.91	6.76	7.64	8.54	9.45	10.4
0.70	1.93	2.17	2.45	2.76	3.11	3.47	3.86	4.26	4.67	5.06	5.46	6.27	7.12	7.99	8.88	9.79
0.80	1.73	1.95	2.21	2.50	2.82	3.16	3.53	3.91	4.30	4.67	5.05	5.84	6.65	7.49	8.35	9.24
0.90	1.57	1.77	2.00	2.28	2.58	2.90	3.25	3.61	3.97	4.33	4.70	5.44	6.23	7.04	7.87	8.74
1.0	1.43	1.61	1.83	2.09	2.37	2.68	3.00	3.35	3.69	4.03	4.38	5.09	5.84	6.63	7.44	8.27
1.2	1.21	1.37	1.56	1.79	2.04	2.31	2.61	2.91	3.22	3.53	3.85	4.50	5.19	5.92	6.67	7.46
1.4	1.05	1.19	1.36	1.56	1.79	2.03	2.29	2.57	2.85	3.13	3.42	4.02	4.66	5.33	6.03	6.76
1.6	0.926	1.05	1.20	1.38	1.59	1.81	2.05	2.29	2.55	2.80	3.07	3.62	4.21	4.84	5.49	6.18
1.8	0.827	0.938	1.08	1.24	1.43	1.63	1.84	2.07	2.30	2.54	2.78	3.29	3.84	4.42	5.03	5.67
2.0	0.747	0.848	0.977	1.13	1.29	1.48	1.68	1.89	2.10	2.32	2.54	3.02	3.52	4.07	4.64	5.24
2.2	0.681	0.774	0.892	1.03	1.18	1.35	1.54	1.73	1.93	2.13	2.34	2.78	3.26	3.76	4.30	4.86
2.4	0.626	0.711	0.821	0.948	1.09	1.25	1.42	1.60	1.78	1.97	2.16	2.58	3.02	3.50	4.00	4.53
2.6	0.579	0.658	0.760	0.878	1.01	1.16	1.31	1.48	1.65	1.83	2.01	2.40	2.82	3.27	3.74	4.24
2.8	0.538	0.612	0.707	0.818	0.942	1.08	1.23	1.38	1.54	1.71	1.88	2.25	2.64	3.06	3.51	3.99
3.0	0.503	0.572	0.661	0.765	0.882	1.01	1.15	1.29	1.45	1.60	1.77	2.11	2.48	2.88	3.31	3.76

Shaded values indicate the value is based on the greatest available strength permitted by AISC *Specification* Sections J2.4, J2.4(a), J2.4(b) and J2.4(c).

Table 8-6 (continued)
Coefficients, C, for Eccentrically Loaded Weld Groups
Angle = 45°

Available strength of a weld group, ϕR_n or R_n/Ω, is determined with
$R_n = CC_1Dl$ ($\phi = 0.75$, $\Omega = 2.00$)

LRFD	ASD
$C_{min} = \dfrac{P_u}{\phi C_1 Dl}$ $D_{min} = \dfrac{P_u}{\phi C C_1 l}$ $l_{min} = \dfrac{P_u}{\phi C C_1 D}$	$C_{min} = \dfrac{\Omega P_a}{C_1 Dl}$ $D_{min} = \dfrac{\Omega P_a}{C C_1 l}$ $l_{min} = \dfrac{\Omega P_a}{C C_1 D}$

where
P = required force, P_u or P_a, kips
D = number of sixteenths-of-an-inch in the fillet weld size
l = characteristic length of weld group, in.
a = e_x/l
e_x = horizontal component of eccentricity of P with respect to centroid of weld group, in.
C = coefficient tabulated below
C_1 = electrode strength coefficient from Table 8-3 (1.0 for E70XX electrodes)

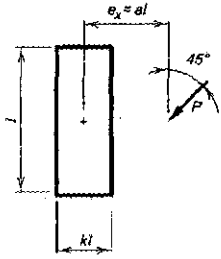

a	k															
	0	0.1	0.2	0.3	0.4	0.5	0.6	0.7	0.8	0.9	1.0	1.2	1.4	1.6	1.8	2.0
0.00	4.82	5.14	5.61	6.08	6.54	7.01	7.48	7.95	8.41	8.88	9.35	10.3	11.2	12.2	13.1	14.0
0.10	4.49	4.99	5.48	5.96	6.45	6.94	7.43	7.92	8.41	8.90	9.39	10.4	11.4	12.3	13.3	14.3
0.15	4.18	4.69	5.19	5.67	6.16	6.65	7.15	7.65	8.15	8.65	9.14	10.1	11.1	12.1	13.1	14.1
0.20	3.92	4.39	4.87	5.36	5.84	6.33	6.83	7.33	7.84	8.34	8.85	9.86	10.9	11.9	12.9	13.9
0.25	3.70	4.13	4.58	5.05	5.52	6.01	6.50	7.00	7.50	8.02	8.53	9.54	10.6	11.6	12.6	13.6
0.30	3.49	3.89	4.32	4.76	5.22	5.70	6.18	6.67	7.18	7.69	8.20	9.21	10.2	11.3	12.3	13.3
0.40	3.10	3.45	3.84	4.25	4.68	5.13	5.60	6.07	6.56	7.06	7.57	8.56	9.57	10.6	11.6	12.7
0.50	2.75	3.07	3.42	3.81	4.22	4.65	5.10	5.56	6.03	6.52	7.01	7.96	8.94	9.96	11.0	12.0
0.60	2.46	2.75	3.08	3.44	3.83	4.24	4.67	5.11	5.58	6.05	6.52	7.43	8.38	9.37	10.4	11.4
0.70	2.21	2.48	2.78	3.12	3.49	3.88	4.30	4.73	5.17	5.62	6.08	6.96	7.87	8.83	9.81	10.8
0.80	2.01	2.25	2.53	2.85	3.20	3.57	3.97	4.39	4.81	5.25	5.69	6.54	7.42	8.34	9.29	10.3
0.90	1.83	2.06	2.32	2.62	2.95	3.31	3.69	4.08	4.49	4.91	5.33	6.16	7.01	7.89	8.81	9.76
1.0	1.68	1.89	2.13	2.42	2.73	3.08	3.44	3.81	4.20	4.60	5.01	5.81	6.63	7.48	8.38	9.30
1.2	1.44	1.62	1.84	2.10	2.38	2.69	3.02	3.36	3.71	4.08	4.46	5.20	5.97	6.77	7.60	8.47
1.4	1.25	1.41	1.61	1.84	2.10	2.38	2.68	2.99	3.32	3.65	4.00	4.69	5.41	6.17	6.95	7.76
1.6	1.11	1.25	1.43	1.64	1.88	2.13	2.40	2.69	2.99	3.30	3.62	4.27	4.94	5.65	6.38	7.15
1.8	0.996	1.13	1.29	1.48	1.70	1.93	2.18	2.44	2.72	3.00	3.30	3.90	4.53	5.20	5.89	6.62
2.0	0.902	1.02	1.17	1.35	1.55	1.76	1.99	2.23	2.49	2.75	3.03	3.59	4.18	4.81	5.46	6.15
2.2	0.824	0.934	1.07	1.24	1.42	1.62	1.83	2.06	2.29	2.54	2.80	3.32	3.88	4.47	5.09	5.74
2.4	0.758	0.860	0.990	1.14	1.31	1.49	1.69	1.90	2.12	2.36	2.60	3.09	3.62	4.17	4.76	5.37
2.6	0.702	0.797	0.918	1.06	1.22	1.39	1.57	1.77	1.98	2.19	2.42	2.89	3.38	3.91	4.46	5.05
2.8	0.653	0.742	0.855	0.987	1.14	1.30	1.47	1.66	1.85	2.05	2.27	2.71	3.18	3.67	4.20	4.76
3.0	0.611	0.694	0.801	0.925	1.06	1.22	1.38	1.55	1.74	1.93	2.13	2.55	2.99	3.47	3.97	4.50

Shaded values indicate the value is based on the greatest available strength permitted by AISC Specification Sections J2.4, J2.4(a), J2.4(b) and J2.4(c).

Table 8-6 (continued)
Coefficients, C, for Eccentrically Loaded Weld Groups
Angle = 60°

Available strength of a weld group, ϕR_n or R_n/Ω, is determined with
$R_n = CC_1Dl$ ($\phi = 0.75$, $\Omega = 2.00$)

LRFD			ASD		
$C_{min} = \frac{P_u}{\phi C_1 Dl}$	$D_{min} = \frac{P_u}{\phi C C_1 l}$	$l_{min} = \frac{P_u}{\phi C C_1 D}$	$C_{min} = \frac{\Omega P_a}{C_1 Dl}$	$D_{min} = \frac{\Omega P_a}{C C_1 l}$	$l_{min} = \frac{\Omega P_a}{C C_1 D}$

where
P = required force, P_u or P_a, kips
D = number of sixteenths-of-an-inch in the fillet weld size
l = characteristic length of weld group, in.
$a = e_x/l$
e_x = horizontal component of eccentricity of P with respect to centroid of weld group, in.
C = coefficient tabulated below
C_1 = electrode strength coefficient from Table 8-3 (1.0 for E70XX electrodes)

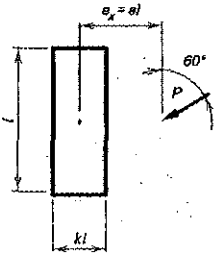

a	k															
	0	0.1	0.2	0.3	0.4	0.5	0.6	0.7	0.8	0.9	1.0	1.2	1.4	1.6	1.8	2.0
0.00	5.21	5.58	6.01	6.45	6.89	7.33	7.76	8.20	8.64	9.07	9.51	10.4	11.3	12.1	13.0	13.9
0.10	4.86	5.29	5.73	6.19	6.65	7.12	7.59	8.06	8.52	8.98	9.43	10.3	11.2	12.1	13.0	13.9
0.15	4.61	5.04	5.48	5.93	6.40	6.88	7.37	7.86	8.34	8.81	9.28	10.2	11.1	12.0	12.9	13.8
0.20	4.36	4.80	5.23	5.67	6.14	6.63	7.13	7.62	8.12	8.61	9.10	10.1	11.0	11.9	12.8	13.7
0.25	4.13	4.56	4.99	5.43	5.89	6.37	6.87	7.38	7.89	8.39	8.89	9.87	10.8	11.8	12.7	13.6
0.30	3.93	4.34	4.76	5.19	5.64	6.12	6.62	7.13	7.65	8.16	8.67	9.67	10.6	11.6	12.5	13.5
0.40	3.58	3.95	4.35	4.77	5.20	5.66	6.15	6.66	7.17	7.69	8.21	9.24	10.2	11.2	12.2	13.2
0.50	3.26	3.60	3.98	4.39	4.82	5.27	5.74	6.24	6.75	7.27	7.78	8.81	9.83	10.8	11.8	12.8
0.60	2.98	3.30	3.66	4.05	4.47	4.92	5.39	5.86	6.36	6.87	7.38	8.41	9.44	10.4	11.4	12.4
0.70	2.74	3.04	3.38	3.75	4.17	4.60	5.06	5.52	6.00	6.50	7.01	8.03	9.05	10.1	11.1	12.1
0.80	2.52	2.81	3.13	3.49	3.89	4.31	4.75	5.21	5.68	6.16	6.65	7.66	8.68	9.70	10.7	11.7
0.90	2.34	2.60	2.91	3.26	3.64	4.05	4.48	4.92	5.38	5.85	6.33	7.32	8.32	9.32	10.3	11.3
1.0	2.17	2.42	2.71	3.05	3.42	3.82	4.23	4.66	5.11	5.56	6.03	6.99	7.98	8.96	9.95	10.9
1.2	1.89	2.12	2.39	2.70	3.04	3.41	3.79	4.20	4.61	5.05	5.49	6.40	7.33	8.28	9.24	10.2
1.4	1.67	1.88	2.12	2.41	2.73	3.07	3.43	3.80	4.20	4.60	5.02	5.89	6.76	7.66	8.60	9.55
1.6	1.50	1.68	1.91	2.18	2.47	2.78	3.12	3.47	3.84	4.22	4.62	5.44	6.26	7.12	8.01	8.93
1.8	1.35	1.52	1.73	1.98	2.25	2.54	2.86	3.19	3.53	3.89	4.26	5.04	5.82	6.63	7.49	8.37
2.0	1.23	1.39	1.59	1.81	2.07	2.34	2.63	2.94	3.26	3.60	3.96	4.69	5.44	6.20	7.02	7.86
2.2	1.13	1.28	1.46	1.67	1.91	2.16	2.44	2.73	3.03	3.35	3.68	4.38	5.10	5.82	6.59	7.41
2.4	1.04	1.18	1.35	1.55	1.77	2.01	2.27	2.54	2.83	3.13	3.44	4.10	4.79	5.49	6.22	6.99
2.6	0.970	1.10	1.26	1.45	1.65	1.88	2.12	2.38	2.65	2.94	3.23	3.86	4.51	5.18	5.88	6.62
2.8	0.905	1.02	1.18	1.35	1.55	1.76	1.99	2.23	2.49	2.76	3.04	3.64	4.26	4.90	5.57	6.28
3.0	0.848	0.961	1.10	1.27	1.46	1.66	1.88	2.11	2.35	2.61	2.87	3.44	4.04	4.65	5.29	5.97

Shaded values indicate the value is based on the greatest available strength permitted by AISC *Specification* Sections J2.4, J2.4(a), J2.4(b) and J2.4(c).

Table 8-6 (continued)
Coefficients, C, for Eccentrically Loaded Weld Groups
Angle = 75°

Available strength of a weld group, ϕR_n or R_n/Ω, is determined with
$R_n = CC_1Dl$ ($\phi = 0.75$, $\Omega = 2.00$)

LRFD	ASD
$C_{min} = \dfrac{P_u}{\phi C_1 Dl}$ $D_{min} = \dfrac{P_u}{\phi C C_1 l}$ $l_{min} = \dfrac{P_u}{\phi C C_1 D}$	$C_{min} = \dfrac{\Omega P_a}{C_1 Dl}$ $D_{min} = \dfrac{\Omega P_a}{C C_1 l}$ $l_{min} = \dfrac{\Omega P_a}{C C_1 D}$

where
P = required force, P_u or P_a, kips
D = number of sixteenths-of-an-inch in the fillet weld size
l = characteristic length of weld group, in.
$a = e_x/l$
e_x = horizontal component of eccentricity of P with respect to centroid of weld group, in.
C = coefficient tabulated below
C_1 = electrode strength coefficient from Table 8-3 (1.0 for E70XX electrodes)

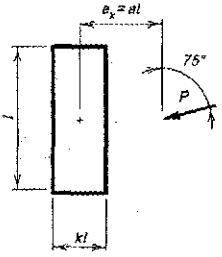

a	k															
	0	0.1	0.2	0.3	0.4	0.5	0.6	0.7	0.8	0.9	1.0	1.2	1.4	1.6	1.8	2.0
0.00	5.47	5.83	6.22	6.60	6.99	7.37	7.76	8.14	8.53	8.91	9.30	10.1	10.8	11.6	12.4	13.1
0.10	5.17	5.55	5.97	6.41	6.84	7.26	7.67	8.07	8.47	8.86	9.25	10.0	10.8	11.6	12.3	13.1
0.15	5.00	5.38	5.80	6.25	6.70	7.14	7.57	7.99	8.40	8.80	9.20	9.98	10.8	11.5	12.3	13.1
0.20	4.85	5.22	5.64	6.09	6.56	7.01	7.46	7.89	8.31	8.72	9.13	9.93	10.7	11.5	12.3	13.1
0.25	4.71	5.07	5.48	5.94	6.41	6.87	7.33	7.78	8.21	8.63	9.05	9.87	10.7	11.5	12.2	13.0
0.30	4.57	4.94	5.34	5.79	6.26	6.73	7.20	7.66	8.10	8.54	8.96	9.79	10.6	11.4	12.2	13.0
0.40	4.32	4.68	5.07	5.52	5.99	6.48	6.95	7.42	7.88	8.32	8.76	9.62	10.5	11.3	12.1	12.9
0.50	4.09	4.45	4.84	5.27	5.74	6.23	6.72	7.20	7.67	8.13	8.58	9.44	10.3	11.1	11.9	12.7
0.60	3.88	4.23	4.62	5.05	5.51	5.99	6.49	6.98	7.46	7.94	8.40	9.28	10.1	11.0	11.8	12.6
0.70	3.69	4.03	4.41	4.84	5.29	5.77	6.26	6.76	7.25	7.74	8.21	9.12	10.0	10.8	11.7	12.5
0.80	3.51	3.84	4.22	4.64	5.09	5.56	6.05	6.55	7.04	7.54	8.02	8.96	9.85	10.7	11.5	12.4
0.90	3.34	3.66	4.03	4.45	4.90	5.36	5.84	6.34	6.84	7.34	7.83	8.78	9.70	10.6	11.4	12.3
1.0	3.18	3.49	3.86	4.27	4.72	5.17	5.64	6.14	6.64	7.14	7.63	8.60	9.54	10.4	11.3	12.2
1.2	2.90	3.19	3.55	3.95	4.38	4.82	5.28	5.76	6.25	6.75	7.25	8.24	9.21	10.1	11.0	11.9
1.4	2.65	2.93	3.27	3.65	4.07	4.51	4.95	5.41	5.89	6.38	6.88	7.88	8.86	9.82	10.8	11.7
1.6	2.44	2.71	3.03	3.40	3.79	4.22	4.65	5.10	5.56	6.04	6.53	7.52	8.51	9.49	10.4	11.4
1.8	2.26	2.51	2.82	3.17	3.55	3.96	4.38	4.82	5.26	5.73	6.21	7.19	8.17	9.16	10.1	11.1
2.0	2.09	2.33	2.63	2.96	3.33	3.72	4.13	4.55	4.99	5.44	5.90	6.86	7.84	8.83	9.80	10.8
2.2	1.95	2.18	2.46	2.78	3.13	3.50	3.90	4.31	4.74	5.17	5.62	6.56	7.53	8.50	9.47	10.4
2.4	1.82	2.04	2.31	2.61	2.95	3.31	3.69	4.09	4.50	4.93	5.36	6.28	7.22	8.19	9.16	10.1
2.6	1.71	1.92	2.18	2.47	2.79	3.13	3.50	3.89	4.29	4.70	5.12	6.01	6.93	7.88	8.85	9.81
2.8	1.61	1.81	2.06	2.34	2.64	2.97	3.33	3.70	4.09	4.49	4.90	5.76	6.66	7.60	8.55	9.51
3.0	1.52	1.71	1.95	2.21	2.51	2.83	3.17	3.53	3.90	4.29	4.69	5.53	6.41	7.32	8.26	9.21

Shaded values indicate the value is based on the greatest available strength permitted by AISC *Specification* Sections J2.4, J2.4(a), J2.4(b) and J2.4(c).

Table 8-7
Coefficients, C, for Eccentrically Loaded Weld Groups
Angle = 0°

Available strength of a weld group, ϕR_n or R_n/Ω, is determined with
$R_n = CC_1Dl$ ($\phi = 0.75$, $\Omega = 2.00$)

LRFD	ASD
$C_{min} = \dfrac{P_u}{\phi C_1 Dl}$ $D_{min} = \dfrac{P_u}{\phi C C_1 l}$ $l_{min} = \dfrac{P_u}{\phi C C_1 D}$	$C_{min} = \dfrac{\Omega P_a}{C_1 Dl}$ $D_{min} = \dfrac{\Omega P_a}{C C_1 l}$ $l_{min} = \dfrac{\Omega P_a}{C C_1 D}$

where
P = required force, P_u or P_a, kips
D = number of sixteenths-of-an-inch in the fillet weld size
l = characteristic length of weld group, in.
a = e_x/l
e_x = horizontal component of eccentricity of P with respect to centroid of weld group, in.
C = coefficient tabulated below
C_1 = electrode strength coefficient from Table 8-3 (1.0 for E70XX electrodes)

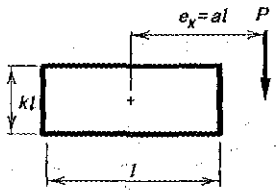

a	k															
	0	0.1	0.2	0.3	0.4	0.5	0.6	0.7	0.8	0.9	1.0	1.2	1.4	1.6	1.8	2.0
0.00	5.57	5.88	6.20	6.51	6.83	7.15	7.46	7.78	8.09	8.41	8.72	9.35	9.98	10.6	11.2	11.9
0.10	4.32	4.68	5.08	5.54	6.02	6.49	6.95	7.40	7.82	8.23	8.62	9.37	10.1	10.8	11.5	12.1
0.15	3.90	4.24	4.65	5.08	5.55	6.04	6.52	7.00	7.47	7.92	8.36	9.18	9.96	10.7	11.4	12.1
0.20	3.54	3.86	4.26	4.69	5.14	5.61	6.10	6.60	7.08	7.56	8.03	8.92	9.76	10.6	11.3	12.1
0.25	3.22	3.53	3.91	4.34	4.77	5.23	5.71	6.20	6.69	7.19	7.67	8.61	9.50	10.3	11.2	12.0
0.30	2.94	3.24	3.60	4.01	4.44	4.88	5.35	5.83	6.32	6.82	7.31	8.27	9.20	10.1	11.0	11.8
0.40	2.48	2.76	3.09	3.46	3.87	4.30	4.73	5.18	5.65	6.13	6.62	7.60	8.57	9.52	10.4	11.3
0.50	2.14	2.38	2.69	3.03	3.40	3.80	4.21	4.64	5.07	5.53	6.00	6.96	7.93	8.90	9.85	10.8
0.60	1.87	2.09	2.37	2.68	3.02	3.39	3.78	4.18	4.59	5.02	5.46	6.38	7.34	8.30	9.26	10.2
0.70	1.65	1.86	2.11	2.40	2.71	3.05	3.41	3.79	4.18	4.58	5.00	5.87	6.79	7.73	8.69	9.64
0.80	1.48	1.67	1.90	2.16	2.45	2.77	3.10	3.46	3.82	4.20	4.60	5.42	6.30	7.21	8.14	9.09
0.90	1.34	1.51	1.73	1.97	2.24	2.53	2.84	3.17	3.52	3.88	4.25	5.03	5.86	6.73	7.64	8.56
1.0	1.22	1.38	1.58	1.81	2.06	2.33	2.62	2.92	3.25	3.59	3.94	4.68	5.47	6.31	7.18	8.07
1.2	1.04	1.17	1.35	1.55	1.76	2.00	2.26	2.53	2.82	3.12	3.43	4.10	4.81	5.57	6.37	7.21
1.4	0.900	1.02	1.17	1.35	1.54	1.75	1.98	2.22	2.48	2.75	3.03	3.64	4.29	4.98	5.71	6.48
1.6	0.794	0.902	1.04	1.19	1.37	1.56	1.76	1.98	2.21	2.45	2.71	3.26	3.85	4.48	5.16	5.85
1.8	0.710	0.807	0.930	1.07	1.23	1.40	1.59	1.78	1.99	2.22	2.45	2.95	3.49	4.08	4.69	5.33
2.0	0.643	0.731	0.842	0.972	1.12	1.27	1.44	1.62	1.81	2.02	2.23	2.69	3.19	3.73	4.30	4.89
2.2	0.586	0.667	0.770	0.888	1.02	1.17	1.32	1.49	1.66	1.85	2.05	2.48	2.94	3.44	3.97	4.51
2.4	0.539	0.613	0.708	0.818	0.941	1.07	1.22	1.37	1.54	1.71	1.89	2.29	2.72	3.18	3.68	4.19
2.6	0.498	0.568	0.656	0.758	0.872	0.996	1.13	1.27	1.43	1.59	1.76	2.13	2.53	2.97	3.42	3.90
2.8	0.464	0.528	0.611	0.706	0.812	0.929	1.05	1.19	1.33	1.48	1.64	1.99	2.37	2.77	3.20	3.65
3.0	0.434	0.494	0.571	0.661	0.760	0.870	0.988	1.11	1.25	1.39	1.54	1.87	2.22	2.60	3.01	3.43

Shaded values indicate the value is based on the greatest available strength permitted by AISC *Specification* Sections J2.4, J2.4(a), J2.4(b) and J2.4(c).

Table 8-7 (continued)
Coefficients, C, for Eccentrically Loaded Weld Groups
Angle = 15°

Available strength of a weld group, ϕR_n or R_n/Ω, is determined with
$R_n = CC_1Dl$ ($\phi = 0.75$, $\Omega = 2.00$)

LRFD	ASD
$C_{min} = \frac{P_u}{\phi C_1 Dl}$ $D_{min} = \frac{P_u}{\phi C C_1 l}$ $l_{min} = \frac{P_u}{\phi C C_1 D}$	$C_{min} = \frac{\Omega P_a}{C_1 Dl}$ $D_{min} = \frac{\Omega P_a}{C C_1 l}$ $l_{min} = \frac{\Omega P_a}{C C_1 D}$

where
P = required force, P_u or P_a, kips
D = number of sixteenths-of-an-inch in the fillet weld size
l = characteristic length of weld group, in.
a = e_x/l
e_x = horizontal component of eccentricity of P with respect to centroid of weld group, in.
C = coefficient tabulated below
C_1 = electrode strength coefficient from Table 8-3 (1.0 for E70XX electrodes)

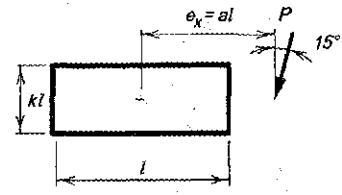

a	k															
	0	0.1	0.2	0.3	0.4	0.5	0.6	0.7	0.8	0.9	1.0	1.2	1.4	1.6	1.8	2.0
0.00	5.47	5.83	6.22	6.60	6.99	7.37	7.76	8.14	8.53	8.91	9.30	10.1	10.8	11.6	12.4	13.1
0.10	4.38	4.75	5.14	5.59	6.06	6.54	7.02	7.48	7.93	8.38	8.82	9.67	10.5	11.3	12.1	12.9
0.15	3.97	4.32	4.71	5.13	5.60	6.09	6.58	7.07	7.55	8.01	8.47	9.35	10.2	11.0	11.8	12.7
0.20	3.60	3.94	4.32	4.75	5.19	5.67	6.16	6.66	7.16	7.64	8.12	9.05	9.93	10.8	11.6	12.4
0.25	3.29	3.60	3.98	4.39	4.84	5.29	5.77	6.27	6.77	7.27	7.76	8.72	9.65	10.5	11.4	12.2
0.30	3.01	3.31	3.67	4.07	4.51	4.95	5.42	5.91	6.40	6.90	7.40	8.39	9.34	10.3	11.2	12.0
0.40	2.55	2.82	3.16	3.53	3.94	4.37	4.81	5.26	5.74	6.22	6.72	7.71	8.70	9.67	10.6	11.5
0.50	2.20	2.45	2.75	3.10	3.47	3.87	4.30	4.73	5.17	5.63	6.10	7.08	8.06	9.05	10.0	11.0
0.60	1.92	2.15	2.43	2.75	3.09	3.46	3.86	4.27	4.69	5.12	5.57	6.50	7.46	8.44	9.41	10.4
0.70	1.71	1.91	2.17	2.46	2.78	3.12	3.49	3.88	4.28	4.69	5.11	5.99	6.92	7.87	8.83	9.79
0.80	1.53	1.72	1.95	2.22	2.52	2.84	3.18	3.54	3.92	4.31	4.71	5.54	6.42	7.34	8.28	9.23
0.90	1.38	1.56	1.78	2.03	2.30	2.60	2.92	3.25	3.61	3.98	4.35	5.15	5.99	6.86	7.77	8.70
1.0	1.26	1.42	1.63	1.86	2.12	2.39	2.69	3.01	3.34	3.69	4.05	4.80	5.59	6.44	7.31	8.20
1.2	1.07	1.21	1.39	1.59	1.82	2.06	2.32	2.60	2.90	3.21	3.53	4.21	4.93	5.70	6.48	7.30
1.4	0.931	1.05	1.21	1.39	1.59	1.81	2.04	2.29	2.55	2.83	3.12	3.74	4.40	5.09	5.80	6.56
1.6	0.822	0.932	1.07	1.23	1.41	1.61	1.82	2.04	2.28	2.53	2.79	3.36	3.96	4.60	5.25	5.93
1.8	0.735	0.834	0.961	1.11	1.27	1.45	1.64	1.84	2.06	2.29	2.53	3.04	3.59	4.18	4.78	5.42
2.0	0.665	0.755	0.870	1.00	1.15	1.31	1.49	1.68	1.87	2.08	2.30	2.78	3.29	3.83	4.39	4.98
2.2	0.607	0.690	0.795	0.918	1.05	1.20	1.37	1.54	1.72	1.91	2.12	2.55	3.03	3.53	4.05	4.60
2.4	0.558	0.634	0.732	0.845	0.972	1.11	1.26	1.42	1.59	1.77	1.96	2.36	2.80	3.27	3.76	4.27
2.6	0.516	0.587	0.678	0.783	0.901	1.03	1.17	1.32	1.47	1.64	1.82	2.20	2.61	3.05	3.50	3.99
2.8	0.480	0.546	0.631	0.730	0.840	0.960	1.09	1.23	1.38	1.53	1.70	2.05	2.44	2.85	3.28	3.73
3.0	0.449	0.511	0.591	0.683	0.786	0.899	1.02	1.15	1.29	1.44	1.59	1.93	2.29	2.67	3.08	3.51

Shaded values indicate the value is based on the greatest available strength permitted by AISC *Specification* Sections J2.4, J2.4(a), J2.4(b) and J2.4(c).

Table 8-7 (continued)
Coefficients, C, for Eccentrically Loaded Weld Groups
Angle = 30°

Available strength of a weld group, ϕR_n or R_n/Ω, is determined with
$R_n = CC_1Dl$ ($\phi = 0.75$, $\Omega = 2.00$)

LRFD			ASD		
$C_{min} = \frac{P_u}{\phi C_1 Dl}$	$D_{min} = \frac{P_u}{\phi C C_1 l}$	$l_{min} = \frac{P_u}{\phi C C_1 D}$	$C_{min} = \frac{\Omega P_a}{C_1 Dl}$	$D_{min} = \frac{\Omega P_a}{C C_1 l}$	$l_{min} = \frac{\Omega P_a}{C C_1 D}$

where
P = required force, P_u or P_a, kips
D = number of sixteenths-of-an-inch in the fillet weld size
l = characteristic length of weld group, in.
$a = e_x/l$
e_x = horizontal component of eccentricity of P with respect to centroid of weld group, in.
C = coefficient tabulated below
C_1 = electrode strength coefficient from Table 8-3 (1.0 for E70XX electrodes)

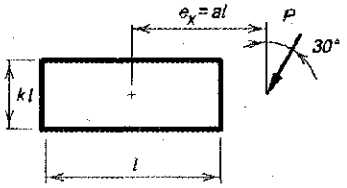

a	k															
	0	0.1	0.2	0.3	0.4	0.5	0.6	0.7	0.8	0.9	1.0	1.2	1.4	1.6	1.8	2.0
0.00	5.21	5.58	6.01	6.45	6.89	7.33	7.76	8.20	8.64	9.07	9.51	10.4	11.3	12.1	13.0	13.9
0.10	4.49	4.93	5.36	5.81	6.28	6.77	7.26	7.75	8.24	8.72	9.20	10.1	11.1	12.0	12.9	13.8
0.15	4.09	4.51	4.94	5.38	5.84	6.32	6.82	7.33	7.84	8.35	8.85	9.83	10.8	11.7	12.7	13.6
0.20	3.76	4.15	4.56	4.99	5.43	5.90	6.40	6.91	7.42	7.94	8.46	9.47	10.5	11.4	12.4	13.3
0.25	3.47	3.83	4.22	4.64	5.07	5.52	6.01	6.51	7.03	7.55	8.06	9.09	10.1	11.1	12.1	13.0
0.30	3.21	3.54	3.92	4.32	4.75	5.20	5.67	6.16	6.67	7.19	7.70	8.73	9.75	10.8	11.7	12.7
0.40	2.76	3.06	3.40	3.77	4.19	4.62	5.08	5.55	6.03	6.53	7.03	8.06	9.08	10.1	11.1	12.1
0.50	2.40	2.67	2.98	3.33	3.72	4.14	4.57	5.02	5.48	5.95	6.44	7.43	8.44	9.45	10.4	11.4
0.60	2.11	2.35	2.64	2.98	3.34	3.73	4.14	4.56	5.00	5.45	5.91	6.87	7.85	8.82	9.81	10.8
0.70	1.88	2.10	2.37	2.68	3.02	3.38	3.77	4.17	4.59	5.02	5.46	6.37	7.29	8.24	9.20	10.2
0.80	1.69	1.89	2.14	2.43	2.75	3.09	3.45	3.83	4.22	4.63	5.05	5.92	6.80	7.71	8.64	9.59
0.90	1.53	1.72	1.95	2.22	2.52	2.84	3.18	3.53	3.91	4.30	4.70	5.52	6.36	7.23	8.13	9.05
1.0	1.40	1.57	1.79	2.04	2.32	2.62	2.94	3.28	3.63	4.00	4.38	5.17	5.96	6.79	7.66	8.56
1.2	1.19	1.34	1.53	1.76	2.00	2.27	2.55	2.85	3.17	3.50	3.85	4.56	5.30	6.05	6.84	7.68
1.4	1.03	1.17	1.34	1.54	1.76	2.00	2.25	2.52	2.81	3.11	3.42	4.07	4.75	5.45	6.17	6.94
1.6	0.914	1.03	1.19	1.37	1.56	1.78	2.01	2.25	2.51	2.79	3.07	3.67	4.30	4.94	5.61	6.32
1.8	0.818	0.927	1.07	1.23	1.41	1.60	1.81	2.04	2.27	2.52	2.78	3.33	3.92	4.51	5.14	5.80
2.0	0.740	0.840	0.966	1.11	1.28	1.46	1.65	1.86	2.07	2.30	2.54	3.05	3.59	4.15	4.74	5.35
2.2	0.675	0.767	0.864	1.02	1.17	1.34	1.51	1.70	1.90	2.12	2.34	2.81	3.31	3.83	4.39	4.97
2.4	0.621	0.706	0.814	0.939	1.08	1.23	1.40	1.57	1.76	1.96	2.16	2.61	3.07	3.56	4.08	4.63
2.6	0.575	0.653	0.754	0.871	1.00	1.14	1.30	1.46	1.64	1.82	2.01	2.43	2.87	3.32	3.81	4.33
2.8	0.535	0.608	0.702	0.812	0.934	1.07	1.21	1.37	1.53	1.70	1.88	2.27	2.68	3.11	3.57	4.06
3.0	0.500	0.569	0.657	0.760	0.874	1.00	1.14	1.28	1.43	1.59	1.77	2.13	2.52	2.93	3.36	3.83

Shaded values indicate the value is based on the greatest available strength permitted by AISC *Specification* Sections J2.4, J2.4(a), J2.4(b) and J2.4(c).

Table 8-7 (continued)
Coefficients, C, for Eccentrically Loaded Weld Groups
Angle = 45°

Available strength of a weld group, ϕR_n or R_n/Ω, is determined with
$R_n = CC_1Dl$ ($\phi = 0.75$, $\Omega = 2.00$)

LRFD	ASD
$C_{min} = \dfrac{P_u}{\phi C_1 Dl}$ $D_{min} = \dfrac{P_u}{\phi C C_1 l}$ $l_{min} = \dfrac{P_u}{\phi C C_1 D}$	$C_{min} = \dfrac{\Omega P_a}{C_1 Dl}$ $D_{min} = \dfrac{\Omega P_a}{C C_1 l}$ $l_{min} = \dfrac{\Omega P_a}{C C_1 D}$

where
P = required force, P_u or P_a, kips
D = number of sixteenths-of-an-inch in the fillet weld size
l = characteristic length of weld group, in.
$a = e_x/l$
e_x = horizontal component of eccentricity of P with respect to centroid of weld group, in.
C = coefficient tabulated below
C_1 = electrode strength coefficient from Table 8-3 (1.0 for E70XX electrodes)

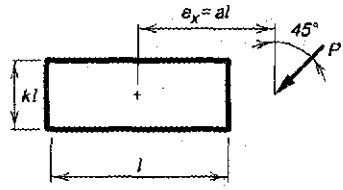

a	k															
	0	0.1	0.2	0.3	0.4	0.5	0.6	0.7	0.8	0.9	1.0	1.2	1.4	1.6	1.8	2.0
0.00	4.82	5.14	5.61	6.08	6.54	7.01	7.48	7.95	8.41	8.88	9.35	10.3	11.2	12.2	13.1	14.0
0.10	4.49	4.99	5.48	5.96	6.45	6.94	7.43	7.92	8.41	8.90	9.39	10.4	11.4	12.3	13.3	14.3
0.15	4.18	4.69	5.19	5.67	6.16	6.65	7.15	7.65	8.15	8.65	9.14	10.1	11.1	12.1	13.1	14.1
0.20	3.92	4.39	4.87	5.36	5.84	6.33	6.83	7.33	7.84	8.34	8.85	9.86	10.9	11.9	12.9	13.9
0.25	3.70	4.13	4.58	5.05	5.52	6.01	6.50	7.00	7.50	8.02	8.53	9.54	10.6	11.6	12.6	13.6
0.30	3.49	3.89	4.32	4.76	5.22	5.70	6.18	6.67	7.18	7.69	8.20	9.21	10.2	11.3	12.3	13.3
0.40	3.10	3.45	3.84	4.25	4.68	5.13	5.60	6.07	6.56	7.06	7.57	8.56	9.57	10.6	11.6	12.7
0.50	2.75	3.07	3.42	3.81	4.22	4.65	5.10	5.56	6.03	6.52	7.01	7.96	8.94	9.96	11.0	12.0
0.60	2.46	2.75	3.08	3.44	3.83	4.24	4.67	5.11	5.58	6.05	6.52	7.43	8.38	9.37	10.4	11.4
0.70	2.21	2.48	2.78	3.12	3.49	3.88	4.30	4.73	5.17	5.62	6.08	6.96	7.87	8.83	9.81	10.8
0.80	2.01	2.25	2.53	2.85	3.20	3.57	3.97	4.39	4.81	5.25	5.69	6.54	7.42	8.34	9.29	10.3
0.90	1.83	2.06	2.32	2.62	2.95	3.31	3.69	4.08	4.49	4.91	5.33	6.16	7.01	7.89	8.81	9.76
1.0	1.68	1.89	2.13	2.42	2.73	3.08	3.44	3.81	4.20	4.60	5.01	5.81	6.63	7.48	8.38	9.30
1.2	1.44	1.62	1.84	2.10	2.38	2.69	3.02	3.36	3.71	4.08	4.46	5.20	5.97	6.77	7.60	8.47
1.4	1.25	1.41	1.61	1.84	2.10	2.38	2.68	2.99	3.32	3.65	4.00	4.69	5.41	6.17	6.95	7.76
1.6	1.11	1.25	1.43	1.64	1.88	2.13	2.40	2.69	2.99	3.30	3.62	4.27	4.94	5.65	6.38	7.15
1.8	0.996	1.13	1.29	1.48	1.70	1.93	2.18	2.44	2.72	3.00	3.30	3.90	4.53	5.20	5.89	6.62
2.0	0.902	1.02	1.17	1.35	1.55	1.76	1.99	2.23	2.49	2.75	3.03	3.59	4.18	4.81	5.46	6.15
2.2	0.824	0.934	1.07	1.24	1.42	1.62	1.83	2.06	2.29	2.54	2.80	3.32	3.88	4.47	5.09	5.74
2.4	0.758	0.860	0.990	1.14	1.31	1.49	1.69	1.90	2.12	2.36	2.60	3.09	3.62	4.17	4.76	5.37
2.6	0.702	0.797	0.918	1.06	1.22	1.39	1.57	1.77	1.98	2.19	2.42	2.89	3.38	3.91	4.46	5.05
2.8	0.653	0.742	0.855	0.987	1.14	1.30	1.47	1.66	1.85	2.05	2.27	2.71	3.18	3.67	4.20	4.76
3.0	0.611	0.694	0.801	0.925	1.06	1.22	1.38	1.55	1.74	1.93	2.13	2.55	2.99	3.47	3.97	4.50

Shaded values indicate the value is based on the greatest available strength permitted by AISC Specification Sections J2.4, J2.4(a), J2.4(b) and J2.4(c).

Table 8-7 (continued)
Coefficients, C, for Eccentrically Loaded Weld Groups
Angle = 60°

Available strength of a weld group, ϕR_n or R_n/Ω, is determined with
$R_n = CC_1Dl$ ($\phi = 0.75$, $\Omega = 2.00$)

LRFD	ASD
$C_{min} = \dfrac{P_u}{\phi C_1 Dl} \quad D_{min} = \dfrac{P_u}{\phi C C_1 l} \quad l_{min} = \dfrac{P_u}{\phi C C_1 D}$	$C_{min} = \dfrac{\Omega P_a}{C_1 Dl} \quad D_{min} = \dfrac{\Omega P_a}{C C_1 l} \quad l_{min} = \dfrac{\Omega P_a}{C C_1 D}$

where
P = required force, P_u or P_a, kips
D = number of sixteenths-of-an-inch in the fillet weld size
l = characteristic length of weld group, in.
$a = e_x/l$
e_x = horizontal component of eccentricity of P with respect to centroid of weld group, in.
C = coefficient tabulated below
C_1 = electrode strength coefficient from Table 8-3 (1.0 for E70XX electrodes)

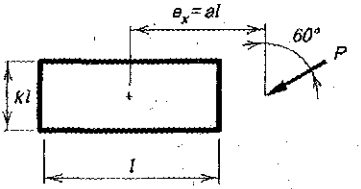

a	k															
	0	0.1	0.2	0.3	0.4	0.5	0.6	0.7	0.8	0.9	1.0	1.2	1.4	1.6	1.8	2.0
0.00	4.37	4.89	5.40	5.91	6.43	6.94	7.46	7.97	8.48	9.00	9.51	10.5	11.6	12.6	13.6	14.7
0.10	4.26	4.79	5.31	5.82	6.34	6.85	7.37	7.88	8.40	8.91	9.43	10.5	11.5	12.5	13.6	14.6
0.15	4.12	4.67	5.19	5.71	6.22	6.73	7.24	7.75	8.26	8.77	9.28	10.3	11.3	12.4	13.4	14.5
0.20	3.97	4.51	5.05	5.57	6.07	6.58	7.08	7.58	8.09	8.59	9.10	10.1	11.1	12.2	13.2	14.2
0.25	3.86	4.36	4.88	5.39	5.90	6.40	6.90	7.39	7.89	8.39	8.89	9.90	10.9	11.9	13.0	14.0
0.30	3.74	4.22	4.72	5.22	5.72	6.21	6.70	7.19	7.68	8.17	8.67	9.67	10.7	11.7	12.7	13.8
0.40	3.51	3.94	4.40	4.88	5.36	5.84	6.32	6.79	7.25	7.73	8.21	9.19	10.2	11.2	12.2	13.3
0.50	3.26	3.66	4.09	4.54	5.00	5.47	5.94	6.40	6.86	7.32	7.78	8.73	9.70	10.7	11.7	12.7
0.60	3.02	3.39	3.79	4.21	4.66	5.11	5.57	6.03	6.48	6.93	7.38	8.30	9.25	10.2	11.2	12.2
0.70	2.80	3.14	3.51	3.91	4.33	4.77	5.23	5.68	6.12	6.56	7.01	7.91	8.84	9.78	10.8	11.8
0.80	2.59	2.91	3.26	3.64	4.04	4.47	4.90	5.35	5.79	6.22	6.65	7.54	8.45	9.38	10.3	11.3
0.90	2.40	2.70	3.03	3.39	3.78	4.19	4.61	5.05	5.48	5.90	6.33	7.20	8.09	9.01	9.95	10.9
1.0	2.23	2.51	2.82	3.17	3.54	3.93	4.34	4.77	5.20	5.61	6.03	6.88	7.76	8.67	9.59	10.5
1.2	1.94	2.19	2.47	2.79	3.13	3.50	3.88	4.28	4.69	5.09	5.49	6.31	7.15	8.02	8.92	9.84
1.4	1.72	1.94	2.19	2.48	2.80	3.14	3.50	3.88	4.27	4.64	5.02	5.80	6.61	7.45	8.31	9.20
1.6	1.53	1.73	1.96	2.23	2.52	2.85	3.19	3.54	3.90	4.26	4.62	5.36	6.13	6.94	7.77	8.62
1.8	1.38	1.56	1.77	2.02	2.30	2.60	2.92	3.25	3.59	3.92	4.26	4.97	5.71	6.48	7.28	8.10
2.0	1.25	1.42	1.62	1.85	2.11	2.39	2.69	3.00	3.32	3.63	3.96	4.62	5.33	6.07	6.83	7.63
2.2	1.15	1.30	1.49	1.70	1.94	2.21	2.49	2.78	3.08	3.38	3.68	4.32	4.99	5.70	6.43	7.20
2.4	1.06	1.20	1.37	1.58	1.80	2.05	2.31	2.59	2.87	3.15	3.44	4.05	4.69	5.37	6.07	6.81
2.6	0.983	1.11	1.28	1.47	1.68	1.91	2.16	2.42	2.69	2.96	3.23	3.81	4.42	5.07	5.75	6.45
2.8	0.917	1.04	1.19	1.37	1.57	1.79	2.03	2.27	2.53	2.78	3.04	3.59	4.18	4.80	5.45	6.13
3.0	0.858	0.973	1.12	1.29	1.48	1.69	1.91	2.14	2.38	2.62	2.87	3.40	3.96	4.55	5.18	5.84

Shaded values indicate the value is based on the greatest available strength permitted by AISC *Specification* Sections J2.4, J2.4(a), J2.4(b) and J2.4(c).

Table 8-7 (continued)
Coefficients, C, for Eccentrically Loaded Weld Groups
Angle = 75°

Available strength of a weld group, ϕR_n or R_n/Ω, is determined with
$R_n = CC_1Dl$ ($\phi = 0.75$, $\Omega = 2.00$)

LRFD	ASD
$C_{min} = \frac{P_u}{\phi C_1 Dl}$ $D_{min} = \frac{P_u}{\phi C C_1 l}$ $l_{min} = \frac{P_u}{\phi C C_1 D}$	$C_{min} = \frac{\Omega P_a}{C_1 Dl}$ $D_{min} = \frac{\Omega P_a}{C C_1 l}$ $l_{min} = \frac{\Omega P_a}{C C_1 D}$

where
P = required force, P_u or P_a, kips
D = number of sixteenths-of-an-inch in the fillet weld size
l = characteristic length of weld group, in.
$a = e_x/l$
e_x = horizontal component of eccentricity of P with respect to centroid of weld group, in.
C = coefficient tabulated below
C_1 = electrode strength coefficient from Table 8-3 (1.0 for E70XX electrodes)

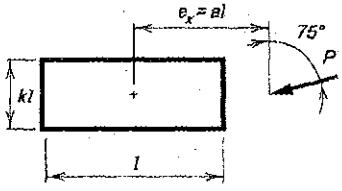

a	k															
	0	0.1	0.2	0.3	0.4	0.5	0.6	0.7	0.8	0.9	1.0	1.2	1.4	1.6	1.8	2.0
0.00	3.96	4.39	4.94	5.48	6.03	6.57	7.12	7.66	8.21	8.75	9.30	10.4	11.5	12.6	13.7	14.7
0.10	3.82	4.36	4.90	5.44	5.99	6.53	7.07	7.62	8.16	8.70	9.25	10.3	11.4	12.5	13.6	14.7
0.15	3.85	4.32	4.86	5.41	5.95	6.49	7.03	7.57	8.11	8.65	9.20	10.3	11.4	12.4	13.5	14.6
0.20	3.84	4.26	4.81	5.36	5.90	6.44	6.98	7.52	8.05	8.59	9.13	10.2	11.3	12.4	13.4	14.5
0.25	3.83	4.23	4.75	5.30	5.84	6.38	6.91	7.45	7.98	8.52	9.05	10.1	11.2	12.3	13.3	14.4
0.30	3.82	4.22	4.72	5.24	5.77	6.30	6.84	7.37	7.90	8.43	8.96	10.0	11.1	12.1	13.2	14.3
0.40	3.78	4.21	4.68	5.18	5.68	6.18	6.69	7.21	7.72	8.24	8.76	9.81	10.9	11.9	13.0	14.0
0.50	3.72	4.17	4.63	5.11	5.59	6.08	6.57	7.07	7.57	8.07	8.58	9.59	10.6	11.7	12.7	13.7
0.60	3.65	4.10	4.56	5.02	5.49	5.96	6.44	6.92	7.41	7.90	8.40	9.39	10.4	11.4	12.4	13.5
0.70	3.56	4.00	4.46	4.91	5.37	5.83	6.30	6.77	7.25	7.73	8.21	9.19	10.2	11.2	12.2	13.2
0.80	3.46	3.89	4.34	4.78	5.23	5.69	6.14	6.61	7.07	7.54	8.02	8.98	9.96	10.9	11.9	12.9
0.90	3.35	3.76	4.20	4.65	5.09	5.54	5.98	6.44	6.90	7.36	7.83	8.77	9.74	10.7	11.7	12.7
1.0	3.23	3.64	4.06	4.51	4.94	5.38	5.82	6.27	6.72	7.17	7.63	8.57	9.52	10.5	11.5	12.5
1.2	3.00	3.38	3.79	4.21	4.64	5.06	5.49	5.92	6.36	6.80	7.25	8.16	9.10	10.0	11.0	12.0
1.4	2.78	3.13	3.51	3.92	4.34	4.75	5.17	5.59	6.01	6.44	6.88	7.77	8.69	9.62	10.6	11.5
1.6	2.57	2.90	3.26	3.64	4.05	4.46	4.86	5.27	5.69	6.11	6.53	7.41	8.30	9.22	10.2	11.1
1.8	2.38	2.69	3.02	3.39	3.78	4.19	4.58	4.98	5.38	5.79	6.21	7.06	7.94	8.85	9.77	10.7
2.0	2.21	2.50	2.81	3.16	3.54	3.93	4.32	4.70	5.10	5.50	5.90	6.74	7.61	8.49	9.40	10.3
2.2	2.05	2.32	2.63	2.96	3.32	3.70	4.08	4.45	4.84	5.23	5.62	6.44	7.29	8.16	9.06	9.97
2.4	1.92	2.17	2.46	2.77	3.12	3.48	3.86	4.22	4.59	4.97	5.36	6.16	7.00	7.85	8.74	9.64
2.6	1.80	2.03	2.30	2.61	2.94	3.29	3.66	4.01	4.37	4.74	5.12	5.91	6.72	7.56	8.43	9.32
2.8	1.69	1.91	2.17	2.46	2.78	3.12	3.47	3.82	4.17	4.53	4.90	5.66	6.46	7.29	8.14	9.01
3.0	1.59	1.80	2.05	2.32	2.63	2.96	3.30	3.64	3.98	4.33	4.69	5.44	6.22	7.02	7.86	8.71

Shaded values indicate the value is based on the greatest available strength permitted by AISC *Specification* Sections J2.4, J2.4(a), J2.4(b) and J2.4(c).

Table 8-8
Coefficients, C, for Eccentrically Loaded Weld Groups
Angle = 0°

Available strength of a weld group, ϕR_n or R_n/Ω, is determined with
$R_n = CC_1Dl$ ($\phi = 0.75$, $\Omega = 2.00$)

LRFD	ASD
$C_{min} = \dfrac{P_u}{\phi C_1 Dl}$ $D_{min} = \dfrac{P_u}{\phi C C_1 l}$ $l_{min} = \dfrac{P_u}{\phi C C_1 D}$	$C_{min} = \dfrac{\Omega P_a}{C_1 Dl}$ $D_{min} = \dfrac{\Omega P_a}{C C_1 l}$ $l_{min} = \dfrac{\Omega P_a}{C C_1 D}$

where
P = required force, P_u or P_a, kips
D = number of sixteenths-of-an-inch in the fillet weld size
l = characteristic length of weld group, in.
$a = e_x/l$
e_x = horizontal component of eccentricity of P with respect to centroid of weld group, in.
C = coefficient tabulated below
C_1 = electrode strength coefficient from Table 8-3 (1.0 for E70XX electrodes)

Note: Shaded values indicate the value is based on the greatest available strength permitted by AISC *Specification* Sections J2.4, J2.4(a), J2.4(b) and J2.4(c).

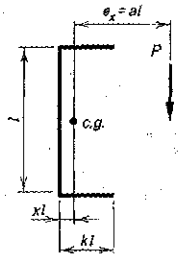

a	k															
	0	0.1	0.2	0.3	0.4	0.5	0.6	0.7	0.8	0.9	1.0	1.2	1.4	1.6	1.8	2.0
0.00	1.86	2.23	2.69	3.25	3.80	4.36	4.92	5.47	6.03	6.59	7.15	8.26	9.37	10.5	11.6	12.7
0.10	1.86	2.28	2.78	3.30	3.83	4.37	4.92	5.46	6.01	6.56	7.11	8.22	9.32	10.4	11.5	12.7
0.15	1.83	2.25	2.73	3.23	3.75	4.27	4.80	5.33	5.87	6.41	6.94	8.02	9.11	10.2	11.3	12.4
0.20	1.76	2.18	2.63	3.11	3.60	4.11	4.61	5.13	5.64	6.16	6.68	7.72	8.77	9.83	10.9	12.0
0.25	1.66	2.07	2.51	2.96	3.42	3.90	4.38	4.87	5.37	5.86	6.36	7.37	8.39	9.42	10.5	11.5
0.30	1.55	1.95	2.36	2.79	3.23	3.68	4.14	4.60	5.08	5.55	6.03	7.01	8.00	9.00	10.0	11.0
0.40	1.33	1.69	2.07	2.45	2.84	3.24	3.65	4.07	4.50	4.94	5.39	6.30	7.24	8.19	9.16	10.1
0.50	1.15	1.46	1.79	2.14	2.49	2.85	3.22	3.60	4.00	4.40	4.82	5.67	6.56	7.47	8.40	9.35
0.60	0.999	1.27	1.57	1.88	2.19	2.52	2.85	3.20	3.57	3.94	4.33	5.13	5.97	6.84	7.74	8.65
0.70	0.879	1.12	1.38	1.66	1.95	2.24	2.55	2.87	3.20	3.55	3.91	4.66	5.46	6.29	7.15	8.04
0.80	0.783	0.996	1.23	1.48	1.75	2.02	2.30	2.59	2.90	3.22	3.56	4.27	5.02	5.82	6.64	7.50
0.90	0.704	0.896	1.11	1.34	1.58	1.83	2.09	2.36	2.65	2.95	3.26	3.93	4.65	5.40	6.19	7.01
1.0	0.639	0.813	1.00	1.21	1.44	1.67	1.91	2.16	2.43	2.71	3.01	3.64	4.31	5.03	5.78	6.56
1.2	0.538	0.684	0.845	1.02	1.21	1.42	1.63	1.85	2.08	2.33	2.59	3.15	3.75	4.39	5.07	5.79
1.4	0.464	0.589	0.729	0.883	1.05	1.23	1.42	1.61	1.82	2.04	2.27	2.77	3.31	3.89	4.50	5.15
1.6	0.408	0.517	0.640	0.775	0.924	1.09	1.25	1.43	1.61	1.81	2.02	2.46	2.95	3.48	4.04	4.64
1.8	0.363	0.461	0.570	0.691	0.825	0.970	1.12	1.28	1.45	1.62	1.81	2.22	2.66	3.14	3.66	4.21
2.0	0.328	0.415	0.514	0.623	0.744	0.877	1.01	1.16	1.31	1.47	1.64	2.01	2.42	2.86	3.34	3.85
2.2	0.298	0.378	0.468	0.567	0.678	0.800	0.926	1.06	1.20	1.35	1.50	1.84	2.22	2.62	3.07	3.54
2.4	0.274	0.347	0.429	0.521	0.623	0.735	0.852	0.973	1.10	1.24	1.38	1.70	2.04	2.42	2.84	3.28
2.6	0.253	0.320	0.396	0.481	0.576	0.680	0.788	0.901	1.02	1.15	1.28	1.57	1.90	2.25	2.64	3.05
2.8	0.235	0.297	0.368	0.447	0.535	0.632	0.734	0.839	0.950	1.07	1.19	1.47	1.77	2.10	2.46	2.85
3.0	0.219	0.278	0.343	0.417	0.500	0.591	0.686	0.784	0.889	1.00	1.12	1.37	1.66	1.97	2.31	2.68
x	0.000	0.008	0.029	0.056	0.089	0.125	0.164	0.204	0.246	0.289	0.333	0.424	0.516	0.610	0.704	0.800

Table 8-8 (continued)
Coefficients, C, for Eccentrically Loaded Weld Groups
Angle = 15°

Available strength of a weld group, ϕR_n or R_n/Ω, is determined with
$R_n = CC_1Dl$ ($\phi = 0.75$, $\Omega = 2.00$)

LRFD	ASD
$C_{min} = \dfrac{P_u}{\phi C_1 Dl} \quad D_{min} = \dfrac{P_u}{\phi C C_1 l} \quad l_{min} = \dfrac{P_u}{\phi C C_1 D}$	$C_{min} = \dfrac{\Omega P_a}{C_1 Dl} \quad D_{min} = \dfrac{\Omega P_a}{C C_1 l} \quad l_{min} = \dfrac{\Omega P_a}{C C_1 D}$

where
P = required force, P_u or P_a, kips
D = number of sixteenths-of-an-inch in the fillet weld size
l = characteristic length of weld group, in.
$a = e_x/l$
e_x = horizontal component of eccentricity of P with respect to centroid of weld group, in.
C = coefficient tabulated below
C_1 = electrode strength coefficient from Table 8-3 (1.0 for E70XX electrodes)

Note: Shaded values indicate the value is based on the greatest available strength permitted by AISC *Specification* Sections J2.4, J2.4(a), J2.4(b) and J2.4(c).

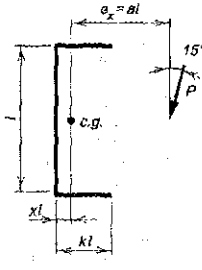

a	k															
	0	0.1	0.2	0.3	0.4	0.5	0.6	0.7	0.8	0.9	1.0	1.2	1.4	1.6	1.8	2.0
0.00	1.98	2.47	3.01	3.56	4.10	4.65	5.19	5.74	6.28	6.83	7.37	8.46	9.55	10.6	11.7	12.8
0.10	1.90	2.35	2.87	3.41	3.95	4.50	5.05	5.60	6.15	6.70	7.24	8.34	9.43	10.5	11.6	12.7
0.15	1.84	2.30	2.79	3.30	3.81	4.33	4.86	5.39	5.92	6.45	6.98	8.06	9.13	10.2	11.3	12.4
0.20	1.76	2.21	2.68	3.16	3.65	4.15	4.65	5.16	5.67	6.18	6.69	7.72	8.76	9.80	10.9	11.9
0.25	1.65	2.08	2.54	3.00	3.47	3.94	4.42	4.91	5.39	5.89	6.38	7.38	8.39	9.40	10.4	11.5
0.30	1.55	1.95	2.39	2.82	3.27	3.72	4.18	4.64	5.11	5.58	6.06	7.03	8.01	9.00	10.0	11.0
0.40	1.34	1.69	2.07	2.47	2.88	3.28	3.70	4.12	4.55	4.99	5.43	6.34	7.27	8.23	9.19	10.2
0.50	1.16	1.47	1.80	2.16	2.53	2.89	3.27	3.66	4.05	4.46	4.87	5.73	6.62	7.53	8.46	9.41
0.60	1.01	1.28	1.58	1.89	2.23	2.56	2.91	3.26	3.63	4.00	4.39	5.20	6.04	6.91	7.81	8.73
0.70	0.895	1.13	1.40	1.68	1.98	2.29	2.60	2.93	3.27	3.62	3.98	4.74	5.54	6.38	7.24	8.13
0.80	0.799	1.01	1.25	1.50	1.77	2.06	2.35	2.65	2.96	3.29	3.63	4.35	5.11	5.91	6.74	7.60
0.90	0.720	0.912	1.12	1.35	1.60	1.87	2.14	2.42	2.71	3.01	3.33	4.01	4.74	5.50	6.29	7.11
1.0	0.654	0.829	1.02	1.23	1.46	1.70	1.96	2.22	2.49	2.78	3.08	3.72	4.40	5.12	5.88	6.67
1.2	0.552	0.700	0.863	1.04	1.24	1.45	1.67	1.90	2.14	2.40	2.66	3.23	3.84	4.49	5.18	5.90
1.4	0.477	0.604	0.746	0.902	1.07	1.26	1.46	1.66	1.87	2.10	2.34	2.84	3.39	3.98	4.61	5.27
1.6	0.420	0.531	0.656	0.794	0.946	1.11	1.29	1.47	1.66	1.86	2.08	2.53	3.03	3.57	4.14	4.75
1.8	0.374	0.474	0.585	0.709	0.845	0.995	1.16	1.32	1.49	1.68	1.87	2.28	2.74	3.23	3.75	4.32
2.0	0.338	0.427	0.528	0.640	0.764	0.900	1.05	1.19	1.35	1.52	1.70	2.08	2.49	2.94	3.43	3.95
2.2	0.308	0.389	0.481	0.583	0.696	0.822	0.956	1.09	1.24	1.39	1.55	1.90	2.28	2.70	3.16	3.64
2.4	0.282	0.357	0.441	0.535	0.640	0.756	0.880	1.00	1.14	1.28	1.43	1.75	2.11	2.50	2.92	3.37
2.6	0.261	0.330	0.408	0.495	0.592	0.699	0.814	0.931	1.05	1.19	1.32	1.63	1.96	2.32	2.72	3.14
2.8	0.242	0.307	0.379	0.460	0.551	0.651	0.758	0.866	0.982	1.10	1.23	1.51	1.83	2.17	2.54	2.94
3.0	0.226	0.286	0.354	0.430	0.515	0.609	0.709	0.810	0.918	1.03	1.15	1.42	1.71	2.03	2.38	2.76
x	0.000	0.008	0.029	0.056	0.089	0.125	0.164	0.204	0.246	0.289	0.333	0.424	0.516	0.610	0.704	0.800

Table 8-8 (continued)
Coefficients, C, for Eccentrically Loaded Weld Groups
Angle = 30°

Available strength of a weld group, ϕR_n or R_n/Ω, is determined with
$R_n = CC_1Dl$ ($\phi = 0.75$, $\Omega = 2.00$)

LRFD	ASD
$C_{min} = \frac{P_u}{\phi C_1 Dl}$ $D_{min} = \frac{P_u}{\phi C C_1 l}$ $l_{min} = \frac{P_u}{\phi C C_1 D}$	$C_{min} = \frac{\Omega P_a}{C_1 Dl}$ $D_{min} = \frac{\Omega P_a}{C C_1 l}$ $l_{min} = \frac{\Omega P_a}{C C_1 D}$

where
P = required force, P_u or P_a, kips
D = number of sixteenths-of-an-inch in the fillet weld size
l = characteristic length of weld group, in.
a = e_x/l
e_x = horizontal component of eccentricity of P with respect to centroid of weld group, in.
C = coefficient tabulated below
C_1 = electrode strength coefficient from Table 8-3 (1.0 for E70XX electrodes)

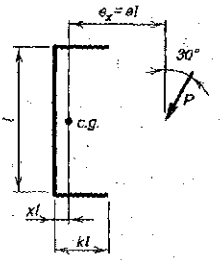

Note: Shaded values indicate the value is based on the greatest available strength permitted by AISC *Specification* Sections J2.4, J2.4(a), J2.4(b) and J2.4(c).

a	k															
	0	0.1	0.2	0.3	0.4	0.5	0.6	0.7	0.8	0.9	1.0	1.2	1.4	1.6	1.8	2.0
0.00	2.18	2.70	3.21	3.73	4.24	4.76	5.27	5.78	6.30	6.81	7.33	8.35	9.38	10.4	11.4	12.5
0.10	2.02	2.57	3.10	3.62	4.14	4.67	5.19	5.71	6.23	6.75	7.28	8.32	9.37	10.4	11.5	12.5
0.15	1.92	2.43	2.95	3.47	3.98	4.49	5.00	5.52	6.03	6.54	7.05	8.09	9.12	10.2	11.2	12.2
0.20	1.82	2.29	2.79	3.29	3.78	4.28	4.77	5.27	5.77	6.27	6.77	7.78	8.80	9.83	10.9	11.9
0.25	1.71	2.15	2.62	3.10	3.58	4.06	4.53	5.01	5.49	5.97	6.46	7.45	8.45	9.47	10.5	11.5
0.30	1.61	2.01	2.45	2.91	3.37	3.83	4.29	4.75	5.21	5.68	6.15	7.11	8.09	9.10	10.1	11.1
0.40	1.41	1.76	2.15	2.55	2.97	3.40	3.83	4.26	4.69	5.13	5.57	6.49	7.42	8.38	9.36	10.4
0.50	1.23	1.54	1.88	2.24	2.62	3.01	3.41	3.81	4.22	4.63	5.05	5.92	6.82	7.74	8.68	9.65
0.60	1.08	1.36	1.66	1.99	2.33	2.68	3.06	3.43	3.81	4.20	4.60	5.42	6.28	7.17	8.09	9.03
0.70	0.964	1.21	1.48	1.77	2.08	2.41	2.75	3.11	3.46	3.83	4.20	4.99	5.81	6.67	7.56	8.47
0.80	0.865	1.09	1.33	1.60	1.88	2.18	2.50	2.83	3.16	3.51	3.86	4.61	5.40	6.22	7.07	7.95
0.90	0.783	0.986	1.21	1.45	1.71	1.99	2.29	2.60	2.91	3.23	3.57	4.28	5.03	5.81	6.63	7.47
1.0	0.714	0.900	1.10	1.33	1.57	1.83	2.10	2.39	2.69	3.00	3.31	3.98	4.70	5.45	6.23	7.04
1.2	0.606	0.764	0.939	1.13	1.34	1.57	1.81	2.07	2.33	2.60	2.89	3.49	4.13	4.81	5.53	6.29
1.4	0.525	0.663	0.815	0.983	1.17	1.37	1.58	1.81	2.05	2.29	2.55	3.09	3.67	4.30	4.96	5.66
1.6	0.463	0.584	0.719	0.868	1.03	1.21	1.41	1.61	1.82	2.04	2.27	2.77	3.30	3.87	4.49	5.13
1.8	0.414	0.522	0.643	0.777	0.925	1.09	1.27	1.45	1.64	1.84	2.05	2.50	2.99	3.52	4.09	4.69
2.0	0.374	0.472	0.581	0.703	0.838	0.988	1.15	1.32	1.49	1.67	1.87	2.28	2.73	3.22	3.75	4.31
2.2	0.341	0.430	0.530	0.642	0.766	0.903	1.05	1.21	1.37	1.53	1.71	2.09	2.51	2.97	3.46	3.98
2.4	0.313	0.395	0.487	0.590	0.705	0.832	0.970	1.11	1.26	1.41	1.58	1.93	2.32	2.75	3.21	3.70
2.6	0.289	0.365	0.451	0.546	0.653	0.771	0.899	1.03	1.17	1.31	1.47	1.80	2.16	2.56	2.99	3.45
2.8	0.269	0.340	0.419	0.508	0.608	0.718	0.838	0.960	1.09	1.22	1.37	1.68	2.02	2.39	2.80	3.24
3.0	0.251	0.317	0.392	0.475	0.569	0.672	0.784	0.899	1.02	1.15	1.28	1.57	1.89	2.25	2.63	3.04
x	0.000	0.008	0.029	0.056	0.089	0.125	0.164	0.204	0.246	0.289	0.333	0.424	0.516	0.610	0.704	0.800

Table 8-8 (continued)
Coefficients, C, for Eccentrically Loaded Weld Groups
Angle = 45°

Available strength of a weld group, ϕR_n or R_n/Ω, is determined with
$R_n = CC_1Dl$ ($\phi = 0.75$, $\Omega = 2.00$)

LRFD	ASD
$C_{min} = \frac{P_u}{\phi C_1 Dl}$ $D_{min} = \frac{P_u}{\phi C C_1 l}$ $l_{min} = \frac{P_u}{\phi C C_1 D}$	$C_{min} = \frac{\Omega P_a}{C_1 Dl}$ $D_{min} = \frac{\Omega P_a}{C C_1 l}$ $l_{min} = \frac{\Omega P_a}{C C_1 D}$

where
P = required force, R_n or P_a, kips
D = number of sixteenths-of-an-inch in the fillet weld size
l = characteristic length of weld group, in.
a = e_x/l
e_x = horizontal component of eccentricity of P with respect to centroid of weld group, in.
C = coefficient tabulated below
C_1 = electrode strength coefficient from Table 8-3 (1.0 for E70XX electrodes)

Note: Shaded values indicate the value is based on the greatest available strength permitted by AISC *Specification* Sections J2.4, J2.4(a), J2.4(b) and J2.4(c).

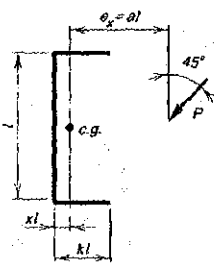

a	k															
	0	0.1	0.2	0.3	0.4	0.5	0.6	0.7	0.8	0.9	1.0	1.2	1.4	1.6	1.8	2.0
0.00	2.41	2.80	3.27	3.74	4.21	4.67	5.14	5.61	6.08	6.54	7.01	7.95	8.88	9.82	10.8	11.7
0.10	2.24	2.74	3.24	3.73	4.23	4.73	5.22	5.72	6.21	6.71	7.20	8.19	9.17	10.1	11.1	12.1
0.15	2.09	2.60	3.09	3.58	4.07	4.57	5.06	5.56	6.06	6.55	7.05	8.04	9.03	10.0	11.0	12.0
0.20	1.96	2.44	2.92	3.40	3.88	4.37	4.86	5.36	5.85	6.35	6.84	7.83	8.83	9.82	10.8	11.8
0.25	1.85	2.29	2.75	3.21	3.68	4.16	4.64	5.13	5.62	6.11	6.60	7.58	8.58	9.58	10.6	11.6
0.30	1.74	2.16	2.59	3.03	3.48	3.94	4.42	4.89	5.38	5.86	6.34	7.32	8.31	9.32	10.3	11.3
0.40	1.55	1.91	2.30	2.70	3.12	3.55	3.99	4.44	4.91	5.37	5.83	6.77	7.75	8.76	9.77	10.8
0.50	1.38	1.70	2.05	2.42	2.80	3.20	3.62	4.04	4.48	4.93	5.37	6.27	7.22	8.20	9.20	10.2
0.60	1.23	1.52	1.84	2.18	2.53	2.90	3.29	3.70	4.11	4.54	4.96	5.83	6.73	7.68	8.65	9.65
0.70	1.11	1.38	1.66	1.97	2.30	2.65	3.01	3.40	3.79	4.20	4.61	5.44	6.30	7.21	8.15	9.12
0.80	1.00	1.25	1.51	1.80	2.11	2.43	2.77	3.13	3.51	3.91	4.29	5.08	5.91	6.78	7.69	8.64
0.90	0.915	1.14	1.39	1.65	1.94	2.24	2.56	2.91	3.27	3.64	4.01	4.76	5.56	6.39	7.27	8.19
1.0	0.839	1.05	1.28	1.52	1.79	2.08	2.38	2.71	3.05	3.40	3.75	4.47	5.24	6.04	6.89	7.77
1.2	0.719	0.900	1.10	1.31	1.55	1.80	2.08	2.37	2.68	3.00	3.31	3.98	4.68	5.43	6.22	7.04
1.4	0.627	0.786	0.961	1.15	1.36	1.59	1.84	2.11	2.39	2.67	2.96	3.57	4.22	4.91	5.65	6.42
1.6	0.555	0.697	0.854	1.03	1.22	1.42	1.65	1.89	2.15	2.40	2.67	3.23	3.83	4.48	5.16	5.88
1.8	0.498	0.625	0.767	0.923	1.10	1.29	1.49	1.72	1.95	2.18	2.42	2.94	3.50	4.10	4.74	5.42
2.0	0.451	0.567	0.696	0.839	0.997	1.17	1.36	1.57	1.78	1.99	2.22	2.70	3.22	3.78	4.38	5.02
2.2	0.412	0.518	0.636	0.768	0.914	1.08	1.25	1.44	1.63	1.83	2.04	2.49	2.97	3.50	4.07	4.67
2.4	0.379	0.477	0.586	0.708	0.844	0.995	1.16	1.33	1.51	1.70	1.89	2.31	2.76	3.26	3.79	4.36
2.6	0.351	0.442	0.543	0.657	0.784	0.924	1.08	1.24	1.40	1.58	1.76	2.15	2.58	3.05	3.55	4.09
2.8	0.327	0.411	0.506	0.612	0.731	0.863	1.01	1.16	1.31	1.47	1.64	2.01	2.42	2.86	3.33	3.84
3.0	0.306	0.385	0.474	0.573	0.685	0.809	0.943	1.09	1.23	1.38	1.54	1.89	2.27	2.69	3.14	3.63
x	0.000	0.008	0.029	0.056	0.089	0.125	0.164	0.204	0.246	0.289	0.333	0.424	0.516	0.610	0.704	0.800

Table 8-8 (continued)
Coefficients, C, for Eccentrically Loaded Weld Groups
Angle = 60°

Available strength of a weld group, ϕR_n or R_n/Ω, is determined with
$R_n = CC_1Dl$ ($\phi = 0.75$, $\Omega = 2.00$)

LRFD	ASD
$C_{min} = \frac{P_u}{\phi C_1 Dl}$ $D_{min} = \frac{P_u}{\phi C C_1 l}$ $l_{min} = \frac{P_u}{\phi C C_1 D}$	$C_{min} = \frac{\Omega P_a}{C_1 Dl}$ $D_{min} = \frac{\Omega P_a}{C C_1 l}$ $l_{min} = \frac{\Omega P_a}{C C_1 D}$

where
P = required force, P_u or P_a, kips
D = number of sixteenths-of-an-inch in the fillet weld size
l = characteristic length of weld group, in.
$a = e_x/l$
e_x = horizontal component of eccentricity of P with respect to centroid of weld group, in.
C = coefficient tabulated below
C_1 = electrode strength coefficient from Table 8-3 (1.0 for E70XX electrodes)

Note: Shaded values indicate the value is based on the greatest available strength permitted by AISC *Specification* Sections J2.4, J2.4(a), J2.4(b) and J2.4(c).

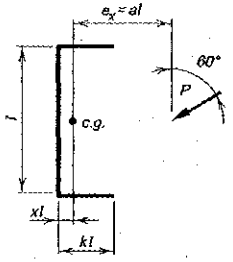

a	k															
	0	0.1	0.2	0.3	0.4	0.5	0.6	0.7	0.8	0.9	1.0	1.2	1.4	1.6	1.8	2.0
0.00	2.60	3.01	3.44	3.88	4.32	4.76	5.19	5.63	6.07	6.50	6.94	7.82	8.69	9.56	10.4	11.3
0.10	2.43	2.86	3.30	3.75	4.21	4.68	5.14	5.61	6.07	6.53	6.99	7.89	8.79	9.67	10.5	11.4
0.15	2.31	2.74	3.17	3.62	4.07	4.54	5.01	5.49	5.96	6.44	6.90	7.83	8.74	9.64	10.5	11.4
0.20	2.18	2.61	3.04	3.47	3.93	4.39	4.86	5.34	5.83	6.31	6.79	7.73	8.66	9.57	10.5	11.4
0.25	2.07	2.49	2.91	3.33	3.77	4.23	4.70	5.18	5.67	6.16	6.64	7.61	8.55	9.48	10.4	11.3
0.30	1.97	2.37	2.78	3.20	3.63	4.07	4.54	5.02	5.51	6.00	6.49	7.46	8.42	9.36	10.3	11.2
0.40	1.79	2.16	2.55	2.94	3.35	3.77	4.22	4.69	5.17	5.66	6.15	7.14	8.12	9.09	10.0	11.0
0.50	1.63	1.98	2.34	2.71	3.10	3.50	3.93	4.38	4.85	5.33	5.82	6.80	7.79	8.77	9.73	10.7
0.60	1.49	1.81	2.15	2.50	2.87	3.26	3.67	4.10	4.55	5.02	5.50	6.48	7.46	8.42	9.38	10.3
0.70	1.37	1.67	1.99	2.32	2.67	3.05	3.44	3.86	4.29	4.74	5.21	6.16	7.11	8.07	9.04	10.0
0.80	1.26	1.54	1.84	2.16	2.50	2.85	3.23	3.63	4.05	4.48	4.94	5.85	6.78	7.73	8.69	9.65
0.90	1.17	1.43	1.71	2.02	2.34	2.68	3.04	3.43	3.83	4.25	4.68	5.57	6.47	7.40	8.35	9.31
1.0	1.08	1.33	1.60	1.89	2.19	2.52	2.87	3.24	3.63	4.03	4.45	5.30	6.18	7.09	8.03	8.98
1.2	0.946	1.17	1.41	1.67	1.95	2.25	2.58	2.92	3.28	3.65	4.04	4.82	5.65	6.52	7.42	8.35
1.4	0.837	1.04	1.25	1.49	1.75	2.03	2.33	2.65	2.98	3.33	3.69	4.42	5.19	6.01	6.87	7.77
1.6	0.748	0.930	1.13	1.34	1.58	1.84	2.12	2.42	2.73	3.05	3.38	4.07	4.79	5.56	6.38	7.24
1.8	0.676	0.842	1.02	1.22	1.44	1.68	1.94	2.22	2.51	2.81	3.12	3.76	4.45	5.17	5.95	6.77
2.0	0.616	0.768	0.936	1.12	1.32	1.55	1.79	2.05	2.32	2.60	2.90	3.50	4.14	4.83	5.56	6.34
2.2	0.565	0.706	0.861	1.03	1.22	1.43	1.66	1.90	2.15	2.42	2.69	3.26	3.87	4.53	5.22	5.96
2.4	0.522	0.653	0.797	0.958	1.14	1.33	1.55	1.77	2.01	2.26	2.52	3.05	3.63	4.25	4.91	5.62
2.6	0.485	0.607	0.742	0.893	1.06	1.25	1.44	1.66	1.88	2.12	2.36	2.87	3.42	4.01	4.64	5.31
2.8	0.453	0.567	0.694	0.835	0.994	1.17	1.36	1.56	1.77	1.99	2.22	2.70	3.22	3.79	4.39	5.03
3.0	0.424	0.531	0.651	0.785	0.934	1.10	1.28	1.47	1.67	1.88	2.09	2.55	3.05	3.59	4.17	4.78
x	0.000	0.008	0.029	0.056	0.089	0.125	0.164	0.204	0.246	0.289	0.333	0.424	0.516	0.610	0.704	0.800

Table 8-8 (continued)
Coefficients, *C*, for Eccentrically Loaded Weld Groups
Angle = 75°

Available strength of a weld group, ϕR_n or R_n/Ω, is determined with
$R_n = CC_1Dl$ ($\phi = 0.75$, $\Omega = 2.00$)

LRFD	ASD
$C_{min} = \frac{P_u}{\phi C_1 Dl}$ $D_{min} = \frac{P_u}{\phi C C_1 l}$ $l_{min} = \frac{P_u}{\phi C C_1 D}$	$C_{min} = \frac{\Omega P_a}{C_1 Dl}$ $D_{min} = \frac{\Omega P_a}{C C_1 l}$ $l_{min} = \frac{\Omega P_a}{C C_1 D}$

where
P = required force, P_u or P_a, kips
D = number of sixteenths-of-an-inch in the fillet weld size
l = characteristic length of weld group, in.
a = e_x/l
e_x = horizontal component of eccentricity of P with respect to centroid of weld group, in.
C = coefficient tabulated below
C_1 = electrode strength coefficient from Table 8-3 (1.0 for E70XX electrodes)

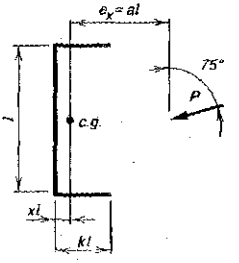

Note: Shaded values indicate the value is based on the greatest available strength permitted by AISC *Specification* Sections J2.4, J2.4(a), J2.4(b) and J2.4(c).

a	*k*															
	0	0.1	0.2	0.3	0.4	0.5	0.6	0.7	0.8	0.9	1.0	1.2	1.4	1.6	1.8	2.0
0.00	2.74	3.11	3.49	3.88	4.26	4.65	5.03	5.42	5.80	6.19	6.57	7.34	8.11	8.88	9.65	10.4
0.10	2.59	2.95	3.34	3.75	4.16	4.58	4.99	5.40	5.80	6.20	6.59	7.37	8.15	8.92	9.69	10.5
0.15	2.50	2.87	3.26	3.67	4.09	4.51	4.94	5.35	5.76	6.17	6.57	7.36	8.14	8.91	9.69	10.5
0.20	2.43	2.79	3.18	3.59	4.01	4.44	4.87	5.29	5.71	6.13	6.53	7.33	8.12	8.90	9.67	10.4
0.25	2.35	2.72	3.10	3.51	3.93	4.36	4.80	5.23	5.66	6.08	6.49	7.30	8.09	8.88	9.66	10.4
0.30	2.28	2.65	3.03	3.43	3.85	4.28	4.72	5.16	5.59	6.02	6.44	7.26	8.06	8.85	9.63	10.4
0.40	2.16	2.52	2.88	3.27	3.69	4.12	4.57	5.01	5.45	5.88	6.31	7.15	7.97	8.78	9.57	10.4
0.50	2.05	2.40	2.75	3.13	3.54	3.97	4.41	4.86	5.30	5.75	6.18	7.04	7.86	8.68	9.48	10.3
0.60	1.94	2.28	2.63	3.00	3.40	3.82	4.26	4.71	5.16	5.61	6.06	6.93	7.77	8.59	9.39	10.2
0.70	1.85	2.18	2.52	2.88	3.26	3.68	4.11	4.56	5.02	5.47	5.92	6.81	7.67	8.51	9.32	10.1
0.80	1.75	2.08	2.41	2.76	3.14	3.54	3.97	4.42	4.87	5.33	5.79	6.69	7.57	8.42	9.25	10.1
0.90	1.67	1.98	2.31	2.65	3.02	3.42	3.84	4.28	4.73	5.19	5.64	6.56	7.45	8.32	9.16	9.98
1.0	1.59	1.90	2.21	2.55	2.91	3.30	3.71	4.14	4.59	5.04	5.50	6.42	7.33	8.21	9.07	9.91
1.2	1.45	1.74	2.04	2.36	2.71	3.08	3.47	3.89	4.32	4.77	5.22	6.15	7.07	7.97	8.86	9.72
1.4	1.33	1.60	1.89	2.20	2.53	2.88	3.26	3.66	4.07	4.51	4.95	5.87	6.79	7.71	8.62	9.51
1.6	1.22	1.48	1.75	2.05	2.37	2.71	3.06	3.44	3.85	4.27	4.70	5.60	6.52	7.44	8.36	9.27
1.8	1.13	1.37	1.63	1.91	2.22	2.54	2.89	3.25	3.64	4.04	4.46	5.34	6.25	7.17	8.10	9.01
2.0	1.05	1.28	1.52	1.79	2.09	2.40	2.73	3.08	3.45	3.84	4.24	5.10	5.99	6.90	7.81	8.73
2.2	0.975	1.19	1.43	1.69	1.97	2.27	2.58	2.92	3.27	3.65	4.04	4.87	5.74	6.62	7.53	8.44
2.4	0.912	1.12	1.34	1.59	1.86	2.15	2.45	2.77	3.11	3.47	3.85	4.65	5.50	6.36	7.25	8.15
2.6	0.856	1.05	1.27	1.50	1.76	2.04	2.33	2.64	2.97	3.31	3.68	4.45	5.26	6.10	6.98	7.87
2.8	0.806	0.993	1.20	1.42	1.67	1.94	2.22	2.52	2.83	3.17	3.52	4.27	5.05	5.86	6.72	7.60
3.0	0.762	0.940	1.14	1.35	1.59	1.84	2.12	2.40	2.71	3.03	3.37	4.09	4.84	5.64	6.47	7.34
x	0.000	0.008	0.029	0.056	0.089	0.125	0.164	0.204	0.246	0.289	0.333	0.424	0.516	0.610	0.704	0.800

Table 8-9
Coefficients, C, for Eccentrically Loaded Weld Groups
Angle = 0°

Available strength of a weld group, ϕR_n or R_n/Ω, is determined with
$R_n = CC_1Dl$ ($\phi = 0.75$, $\Omega = 2.00$)

LRFD	ASD
$C_{min} = \dfrac{P_u}{\phi C_1 Dl}$ $D_{min} = \dfrac{P_u}{\phi C C_1 l}$ $l_{min} = \dfrac{P_u}{\phi C C_1 D}$	$C_{min} = \dfrac{\Omega P_a}{C_1 Dl}$ $D_{min} = \dfrac{\Omega P_a}{C C_1 l}$ $l_{min} = \dfrac{\Omega P_a}{C C_1 D}$

where
P = required force, P_u or P_a, kips
D = number of sixteenths-of-an-inch in the fillet weld size
l = characteristic length of weld group, in.
$a = e_x/l$
e_x = horizontal component of eccentricity of P with respect to centroid of weld group, in.
C = coefficient tabulated below
C_1 = electrode strength coefficient from Table 8-3 (1.0 for E70XX electrodes)

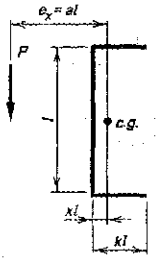

Note: Shaded values indicate the value is based on the greatest available strength permitted by AISC *Specification* Sections J2.4, J2.4(a), J2.4(b) and J2.4(c).

a	k															
	0	0.1	0.2	0.3	0.4	0.5	0.6	0.7	0.8	0.9	1.0	1.2	1.4	1.6	1.8	2.0
0.00	1.86	2.23	2.69	3.25	3.80	4.36	4.92	5.47	6.03	6.59	7.15	8.26	9.37	10.5	11.6	12.7
0.10	1.86	2.30	2.80	3.30	3.82	4.32	4.83	5.34	5.84	6.34	6.84	7.84	8.84	9.83	10.8	11.8
0.15	1.83	2.26	2.73	3.21	3.69	4.18	4.66	5.14	5.62	6.10	6.58	7.54	8.51	9.48	10.4	11.4
0.20	1.76	2.18	2.62	3.07	3.53	3.99	4.45	4.91	5.37	5.83	6.30	7.22	8.16	9.11	10.1	11.0
0.25	1.66	2.06	2.48	2.91	3.35	3.79	4.23	4.67	5.11	5.55	6.00	6.90	7.81	8.73	9.67	10.6
0.30	1.55	1.93	2.33	2.74	3.15	3.57	3.99	4.41	4.84	5.27	5.70	6.57	7.46	8.37	9.29	10.2
0.40	1.33	1.67	2.03	2.39	2.77	3.15	3.53	3.92	4.32	4.72	5.12	5.95	6.79	7.66	8.54	9.44
0.50	1.15	1.45	1.75	2.07	2.41	2.76	3.12	3.47	3.84	4.21	4.59	5.37	6.17	7.00	7.86	8.73
0.60	0.999	1.26	1.52	1.81	2.11	2.43	2.77	3.10	3.44	3.79	4.14	4.88	5.65	6.45	7.27	8.11
0.70	0.879	1.11	1.34	1.60	1.88	2.18	2.48	2.80	3.12	3.44	3.78	4.47	5.20	5.96	6.75	7.56
0.80	0.783	0.982	1.20	1.43	1.69	1.96	2.25	2.55	2.84	3.15	3.47	4.12	4.81	5.54	6.29	7.07
0.90	0.704	0.882	1.08	1.30	1.53	1.78	2.05	2.33	2.61	2.90	3.20	3.82	4.47	5.16	5.89	6.64
1.0	0.639	0.800	0.980	1.18	1.40	1.64	1.88	2.14	2.41	2.69	2.97	3.55	4.17	4.83	5.52	6.24
1.2	0.538	0.674	0.829	1.00	1.19	1.40	1.61	1.84	2.08	2.33	2.58	3.11	3.67	4.27	4.90	5.57
1.4	0.464	0.582	0.717	0.869	1.04	1.22	1.41	1.61	1.83	2.05	2.28	2.76	3.27	3.82	4.40	5.01
1.6	0.408	0.511	0.631	0.766	0.915	1.08	1.25	1.43	1.63	1.83	2.04	2.48	2.95	3.45	3.98	4.55
1.8	0.363	0.456	0.563	0.684	0.818	0.964	1.12	1.29	1.46	1.65	1.84	2.24	2.67	3.14	3.63	4.16
2.0	0.328	0.411	0.508	0.618	0.740	0.872	1.01	1.17	1.33	1.49	1.67	2.05	2.45	2.88	3.34	3.82
2.2	0.298	0.375	0.463	0.563	0.675	0.796	0.926	1.06	1.21	1.37	1.53	1.88	2.25	2.65	3.08	3.54
2.4	0.274	0.344	0.425	0.518	0.620	0.732	0.852	0.980	1.11	1.26	1.41	1.73	2.09	2.46	2.86	3.29
2.6	0.253	0.318	0.393	0.479	0.574	0.678	0.789	0.908	1.03	1.16	1.30	1.61	1.94	2.29	2.67	3.07
2.8	0.235	0.295	0.365	0.445	0.534	0.630	0.735	0.845	0.960	1.08	1.21	1.50	1.81	2.15	2.50	2.88
3.0	0.219	0.276	0.341	0.416	0.499	0.589	0.687	0.791	0.897	1.01	1.13	1.40	1.70	2.02	2.35	2.71
x	0.000	0.008	0.029	0.056	0.089	0.125	0.164	0.204	0.246	0.289	0.333	0.424	0.516	0.610	0.704	0.800

Table 8-9 (continued)
Coefficients, C, for Eccentrically Loaded Weld Groups
Angle = 15°

Available strength of a weld group, ϕR_n or R_n/Ω, is determined with
$R_n = CC_1Dl$ ($\phi = 0.75$, $\Omega = 2.00$)

LRFD	ASD
$C_{min} = \dfrac{P_u}{\phi C_1 Dl}$ $D_{min} = \dfrac{P_u}{\phi C C_1 l}$ $l_{min} = \dfrac{P_u}{\phi C C_1 D}$	$C_{min} = \dfrac{\Omega P_a}{C_1 Dl}$ $D_{min} = \dfrac{\Omega P_a}{C C_1 l}$ $l_{min} = \dfrac{\Omega P_a}{C C_1 D}$

where
P = required force, P_u or P_a, kips
D = number of sixteenths-of-an-inch in the fillet weld size
l = characteristic length of weld group, in.
a = e_x/l
e_x = horizontal component of eccentricity of P with respect to centroid of weld group, in.
C = coefficient tabulated below
C_1 = electrode strength coefficient from Table 8-3 (1.0 for E70XX electrodes)

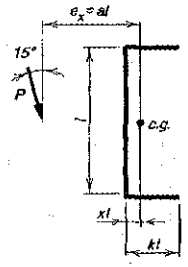

Note: Shaded values indicate the value is based on the greatest available strength permitted by AISC *Specification* Sections J2.4, J2.4(a), J2.4(b) and J2.4(c).

a	k															
	0	0.1	0.2	0.3	0.4	0.5	0.6	0.7	0.8	0.9	1.0	1.2	1.4	1.6	1.8	2.0
0.00	1.98	2.47	3.01	3.56	4.10	4.65	5.19	5.74	6.28	6.83	7.37	8.46	9.55	10.6	11.7	12.8
0.10	1.90	2.36	2.87	3.38	3.88	4.38	4.88	5.38	5.87	6.37	6.86	7.85	8.84	9.84	10.8	11.9
0.15	1.84	2.30	2.78	3.26	3.74	4.21	4.69	5.16	5.63	6.10	6.57	7.52	8.47	9.43	10.4	11.4
0.20	1.76	2.20	2.65	3.11	3.56	4.02	4.47	4.92	5.37	5.82	6.27	7.18	8.10	9.04	9.98	10.9
0.25	1.65	2.07	2.49	2.93	3.37	3.80	4.23	4.66	5.09	5.53	5.96	6.84	7.74	8.65	9.58	10.5
0.30	1.55	1.93	2.33	2.74	3.16	3.58	3.99	4.41	4.82	5.24	5.66	6.52	7.39	8.28	9.19	10.1
0.40	1.34	1.67	2.02	2.38	2.75	3.13	3.52	3.92	4.31	4.70	5.10	5.90	6.74	7.59	8.47	9.37
0.50	1.16	1.45	1.75	2.06	2.39	2.74	3.10	3.47	3.85	4.22	4.60	5.38	6.18	7.00	7.85	8.73
0.60	1.01	1.27	1.53	1.80	2.10	2.42	2.75	3.10	3.46	3.82	4.19	4.92	5.69	6.48	7.30	8.15
0.70	0.895	1.12	1.35	1.60	1.88	2.17	2.48	2.80	3.14	3.48	3.83	4.53	5.26	6.02	6.81	7.62
0.80	0.799	0.997	1.21	1.44	1.69	1.96	2.25	2.55	2.86	3.19	3.52	4.19	4.89	5.61	6.37	7.15
0.90	0.720	0.898	1.09	1.31	1.54	1.79	2.05	2.33	2.63	2.94	3.25	3.89	4.56	5.25	5.97	6.73
1.0	0.654	0.816	0.996	1.20	1.41	1.64	1.89	2.15	2.43	2.72	3.02	3.63	4.26	4.92	5.62	6.34
1.2	0.552	0.689	0.845	1.02	1.21	1.41	1.63	1.86	2.10	2.36	2.63	3.18	3.76	4.37	5.01	5.68
1.4	0.477	0.596	0.733	0.886	1.05	1.23	1.43	1.63	1.85	2.08	2.32	2.83	3.36	3.91	4.50	5.12
1.6	0.420	0.525	0.646	0.782	0.933	1.10	1.27	1.45	1.65	1.86	2.08	2.54	3.03	3.54	4.08	4.66
1.8	0.374	0.468	0.577	0.700	0.836	0.983	1.14	1.31	1.49	1.68	1.88	2.30	2.75	3.23	3.73	4.27
2.0	0.338	0.423	0.522	0.633	0.757	0.891	1.04	1.19	1.35	1.53	1.71	2.10	2.52	2.96	3.43	3.93
2.2	0.308	0.385	0.476	0.578	0.692	0.815	0.948	1.09	1.24	1.40	1.57	1.93	2.32	2.73	3.17	3.64
2.4	0.282	0.354	0.437	0.532	0.636	0.750	0.873	1.00	1.14	1.29	1.45	1.79	2.15	2.54	2.95	3.39
2.6	0.261	0.327	0.404	0.492	0.589	0.695	0.809	0.931	1.06	1.20	1.34	1.66	2.00	2.36	2.75	3.17
2.8	0.242	0.304	0.376	0.458	0.548	0.647	0.754	0.868	0.989	1.12	1.25	1.54	1.87	2.21	2.58	2.97
3.0	0.226	0.284	0.352	0.428	0.513	0.606	0.706	0.812	0.926	1.04	1.17	1.45	1.75	2.08	2.43	2.80
∞	0.000	0.008	0.029	0.056	0.089	0.125	0.164	0.204	0.246	0.289	0.333	0.424	0.516	0.610	0.704	0.800

Table 8-9 (continued)
Coefficients, C, for Eccentrically Loaded Weld Groups
Angle = 30°

Available strength of a weld group, ϕR_n or R_n/Ω, is determined with
$R_n = CC_1Dl$ ($\phi = 0.75$, $\Omega = 2.00$)

LRFD			ASD		
$C_{min} = \frac{P_u}{\phi C_1 Dl}$	$D_{min} = \frac{P_u}{\phi C C_1 l}$	$l_{min} = \frac{P_u}{\phi C C_1 D}$	$C_{min} = \frac{\Omega P_a}{C_1 Dl}$	$D_{min} = \frac{\Omega P_a}{C C_1 l}$	$l_{min} = \frac{\Omega P_a}{C C_1 D}$

where
P = required force, P_u or P_a, kips
D = number of sixteenths-of-an-inch in the fillet weld size
l = characteristic length of weld group, in.
$a = e_x/l$
e_x = horizontal component of eccentricity of P with respect to centroid of weld group, in.
C = coefficient tabulated below
C_1 = electrode strength coefficient from Table 8-3 (1.0 for E70XX electrodes)

Note: Shaded values indicate the value is based on the greatest available strength permitted by AISC *Specification* Sections J2.4, J2.4(a), J2.4(b) and J2.4(c).

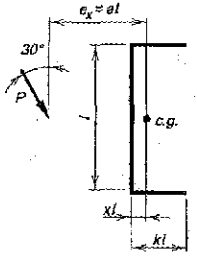

a	k															
	0	0.1	0.2	0.3	0.4	0.5	0.6	0.7	0.8	0.9	1.0	1.2	1.4	1.6	1.8	2.0
0.00	2.18	2.70	3.21	3.73	4.24	4.76	5.27	5.78	6.30	6.81	7.33	8.35	9.38	10.4	11.4	12.5
0.10	2.02	2.56	3.06	3.54	4.02	4.50	4.98	5.46	5.94	6.43	6.92	7.90	8.89	9.89	10.9	11.9
0.15	1.92	2.41	2.90	3.37	3.83	4.28	4.73	5.19	5.65	6.12	6.58	7.54	8.51	9.50	10.5	11.5
0.20	1.82	2.27	2.72	3.16	3.60	4.03	4.46	4.89	5.34	5.78	6.23	7.16	8.11	9.08	10.1	11.1
0.25	1.71	2.13	2.55	2.97	3.37	3.78	4.19	4.60	5.02	5.46	5.90	6.79	7.72	8.68	9.66	10.7
0.30	1.61	1.99	2.38	2.77	3.16	3.55	3.94	4.34	4.75	5.18	5.61	6.48	7.38	8.31	9.27	10.2
0.40	1.41	1.74	2.08	2.43	2.78	3.14	3.50	3.89	4.29	4.70	5.12	5.95	6.81	7.69	8.61	9.54
0.50	1.23	1.52	1.82	2.13	2.45	2.79	3.14	3.51	3.89	4.28	4.69	5.50	6.31	7.16	8.04	8.94
0.60	1.08	1.34	1.60	1.88	2.18	2.50	2.83	3.18	3.54	3.92	4.30	5.09	5.88	6.69	7.53	8.40
0.70	0.964	1.20	1.43	1.69	1.96	2.26	2.57	2.90	3.25	3.60	3.97	4.73	5.48	6.26	7.07	7.91
0.80	0.865	1.07	1.29	1.53	1.79	2.06	2.35	2.66	2.99	3.32	3.67	4.40	5.13	5.88	6.66	7.47
0.90	0.783	0.970	1.17	1.40	1.64	1.89	2.16	2.45	2.76	3.08	3.41	4.11	4.81	5.53	6.29	7.07
1.0	0.714	0.885	1.07	1.28	1.51	1.75	2.00	2.28	2.56	2.87	3.18	3.85	4.53	5.22	5.94	6.70
1.2	0.606	0.753	0.918	1.10	1.30	1.51	1.74	1.98	2.24	2.51	2.80	3.40	4.03	4.67	5.34	6.05
1.4	0.525	0.653	0.800	0.963	1.14	1.33	1.53	1.75	1.98	2.23	2.49	3.04	3.63	4.22	4.84	5.50
1.6	0.463	0.577	0.708	0.854	1.01	1.19	1.37	1.57	1.78	2.00	2.24	2.74	3.29	3.84	4.42	5.03
1.8	0.414	0.516	0.634	0.767	0.913	1.07	1.24	1.42	1.61	1.81	2.03	2.49	3.00	3.51	4.05	4.63
2.0	0.374	0.467	0.574	0.695	0.829	0.974	1.13	1.29	1.47	1.66	1.85	2.28	2.75	3.23	3.74	4.28
2.2	0.341	0.426	0.525	0.636	0.759	0.893	1.04	1.19	1.35	1.52	1.71	2.11	2.54	2.99	3.47	3.97
2.4	0.313	0.392	0.483	0.586	0.699	0.823	0.956	1.10	1.25	1.41	1.58	1.95	2.36	2.78	3.23	3.71
2.6	0.289	0.362	0.447	0.542	0.649	0.764	0.888	1.02	1.16	1.31	1.47	1.82	2.20	2.60	3.02	3.47
2.8	0.269	0.337	0.416	0.505	0.604	0.713	0.829	0.953	1.09	1.23	1.38	1.70	2.06	2.44	2.84	3.27
3.0	0.251	0.315	0.389	0.473	0.566	0.667	0.777	0.894	1.02	1.15	1.29	1.60	1.93	2.29	2.68	3.08
x	0.000	0.008	0.029	0.056	0.089	0.125	0.164	0.204	0.246	0.289	0.333	0.424	0.516	0.610	0.704	0.800

Table 8-9 (continued)
Coefficients, C, for Eccentrically Loaded Weld Groups
Angle = 45°

Available strength of a weld group, ϕR_n or R_n/Ω, is determined with
$R_n = CC_1Dl$ ($\phi = 0.75$, $\Omega = 2.00$)

LRFD	ASD
$C_{min} = \dfrac{P_u}{\phi C_1 Dl}$ $D_{min} = \dfrac{P_u}{\phi C C_1 l}$ $l_{min} = \dfrac{P_u}{\phi C C_1 D}$	$C_{min} = \dfrac{\Omega P_a}{C_1 Dl}$ $D_{min} = \dfrac{\Omega P_a}{C C_1 l}$ $l_{min} = \dfrac{\Omega P_a}{C C_1 D}$

where
P = required force, P_u or P_a, kips
D = number of sixteenths-of-an-inch in the fillet weld size
l = characteristic length of weld group, in.
$a = e_x/l$
e_x = horizontal component of eccentricity of P with respect to centroid of weld group, in.
C = coefficient tabulated below
C_1 = electrode strength coefficient from Table 8-3 (1.0 for E70XX electrodes)

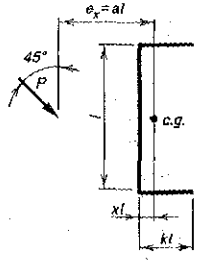

Note: Shaded values indicate the value is based on the greatest available strength permitted by AISC *Specification* Sections J2.4, J2.4(a), J2.4(b) and J2.4(c).

a	k															
	0	0.1	0.2	0.3	0.4	0.5	0.6	0.7	0.8	0.9	1.0	1.2	1.4	1.6	1.8	2.0
0.00	2.41	2.80	3.27	3.74	4.21	4.67	5.14	5.61	6.08	6.54	7.01	7.95	8.88	9.82	10.8	11.7
0.10	2.24	2.72	3.17	3.61	4.05	4.49	4.94	5.41	5.88	6.35	6.82	7.78	8.74	9.71	10.7	11.7
0.15	2.09	2.57	3.00	3.41	3.82	4.24	4.67	5.13	5.59	6.06	6.54	7.51	8.48	9.46	10.4	11.4
0.20	1.96	2.41	2.83	3.21	3.59	3.99	4.41	4.85	5.30	5.77	6.24	7.21	8.19	9.17	10.2	11.2
0.25	1.85	2.27	2.66	3.02	3.38	3.76	4.16	4.59	5.03	5.49	5.95	6.91	7.88	8.87	9.87	10.9
0.30	1.74	2.13	2.50	2.86	3.20	3.57	3.96	4.38	4.81	5.25	5.70	6.64	7.59	8.56	9.55	10.6
0.40	1.55	1.89	2.22	2.55	2.89	3.24	3.62	4.01	4.42	4.84	5.28	6.18	7.11	8.05	8.99	9.95
0.50	1.38	1.68	1.98	2.29	2.61	2.96	3.32	3.69	4.08	4.49	4.91	5.78	6.69	7.60	8.52	9.45
0.60	1.23	1.50	1.77	2.06	2.37	2.71	3.05	3.41	3.78	4.17	4.58	5.42	6.30	7.18	8.08	8.99
0.70	1.11	1.36	1.60	1.88	2.17	2.48	2.81	3.16	3.52	3.89	4.28	5.09	5.94	6.79	7.67	8.57
0.80	1.00	1.23	1.46	1.72	2.00	2.29	2.61	2.93	3.28	3.63	4.01	4.79	5.61	6.43	7.29	8.16
0.90	0.915	1.12	1.34	1.59	1.84	2.12	2.42	2.73	3.06	3.41	3.76	4.51	5.31	6.10	6.93	7.78
1.0	0.839	1.03	1.24	1.47	1.71	1.98	2.26	2.56	2.87	3.20	3.54	4.26	5.03	5.80	6.60	7.43
1.2	0.719	0.886	1.07	1.28	1.50	1.73	1.99	2.26	2.54	2.84	3.16	3.83	4.54	5.26	6.01	6.79
1.4	0.627	0.775	0.943	1.13	1.33	1.54	1.77	2.02	2.28	2.55	2.84	3.46	4.12	4.81	5.50	6.23
1.6	0.555	0.688	0.840	1.01	1.19	1.39	1.60	1.82	2.06	2.31	2.58	3.15	3.77	4.41	5.07	5.75
1.8	0.498	0.618	0.756	0.910	1.08	1.26	1.45	1.66	1.87	2.11	2.36	2.89	3.47	4.07	4.69	5.34
2.0	0.451	0.561	0.687	0.829	0.984	1.15	1.33	1.52	1.72	1.94	2.17	2.66	3.20	3.78	4.36	4.97
2.2	0.412	0.513	0.630	0.760	0.904	1.06	1.22	1.40	1.59	1.79	2.01	2.47	2.97	3.52	4.07	4.65
2.4	0.379	0.473	0.581	0.702	0.836	0.981	1.14	1.30	1.48	1.66	1.86	2.30	2.77	3.29	3.81	4.36
2.6	0.351	0.438	0.539	0.652	0.777	0.913	1.06	1.21	1.38	1.55	1.74	2.15	2.60	3.08	3.58	4.10
2.8	0.327	0.408	0.502	0.608	0.726	0.853	0.990	1.14	1.29	1.46	1.63	2.02	2.44	2.90	3.37	3.87
3.0	0.306	0.382	0.470	0.570	0.680	0.801	0.930	1.07	1.21	1.37	1.54	1.90	2.30	2.74	3.19	3.66
x	0.000	0.008	0.029	0.056	0.089	0.125	0.164	0.204	0.246	0.289	0.333	0.424	0.516	0.610	0.704	0.800

Table 8-9 (continued)
Coefficients, C, for Eccentrically Loaded Weld Groups
Angle = 60°

Available strength of a weld group, ϕR_n or R_n/Ω, is determined with
$R_n = CC_1Dl$ ($\phi = 0.75$, $\Omega = 2.00$)

LRFD	ASD
$C_{min} = \dfrac{P_u}{\phi C_1 Dl}$ $D_{min} = \dfrac{P_u}{\phi C C_1 l}$ $l_{min} = \dfrac{P_u}{\phi C C_1 D}$	$C_{min} = \dfrac{\Omega P_a}{C_1 Dl}$ $D_{min} = \dfrac{\Omega P_a}{C C_1 l}$ $l_{min} = \dfrac{\Omega P_a}{C C_1 D}$

where
P = required force, P_u or P_a, kips
D = number of sixteenths-of-an-inch in the fillet weld size
l = characteristic length of weld group, in.
a = e_x/l
e_x = horizontal component of eccentricity of P with respect to centroid of weld group, in.
C = coefficient tabulated below
C_1 = electrode strength coefficient from Table 8-3 (1.0 for E70XX electrodes)

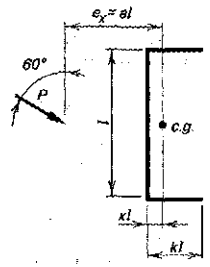

Note: Shaded values indicate the value is based on the greatest available strength permitted by AISC *Specification* Sections J2.4, J2.4(a), J2.4(b) and J2.4(c).

a	k															
	0	0.1	0.2	0.3	0.4	0.5	0.6	0.7	0.8	0.9	1.0	1.2	1.4	1.6	1.8	2.0
0.00	2.60	3.01	3.44	3.88	4.32	4.76	5.19	5.63	6.07	6.50	6.94	7.82	8.69	9.56	10.4	11.3
0.10	2.43	2.84	3.23	3.62	4.04	4.47	4.91	5.36	5.81	6.26	6.71	7.61	8.51	9.40	10.3	11.2
0.15	2.31	2.70	3.07	3.44	3.84	4.26	4.69	5.14	5.59	6.05	6.51	7.43	8.34	9.25	10.2	11.1
0.20	2.18	2.58	2.92	3.27	3.65	4.06	4.48	4.92	5.37	5.83	6.30	7.23	8.16	9.08	9.99	10.9
0.25	2.07	2.46	2.79	3.12	3.49	3.89	4.30	4.73	5.17	5.62	6.08	7.01	7.95	8.89	9.81	10.7
0.30	1.97	2.34	2.67	3.00	3.36	3.75	4.15	4.58	5.01	5.45	5.90	6.81	7.73	8.68	9.62	10.6
0.40	1.79	2.13	2.45	2.78	3.12	3.49	3.89	4.30	4.72	5.16	5.60	6.49	7.39	8.30	9.22	10.1
0.50	1.63	1.95	2.25	2.57	2.91	3.27	3.65	4.05	4.46	4.89	5.33	6.21	7.11	8.01	8.92	9.82
0.60	1.49	1.79	2.08	2.39	2.72	3.06	3.43	3.82	4.22	4.64	5.07	5.95	6.85	7.75	8.65	9.56
0.70	1.37	1.64	1.92	2.22	2.54	2.88	3.23	3.60	4.00	4.40	4.83	5.70	6.59	7.49	8.40	9.30
0.80	1.26	1.52	1.78	2.07	2.38	2.71	3.05	3.41	3.79	4.19	4.60	5.45	6.33	7.23	8.14	9.05
0.90	1.17	1.41	1.66	1.94	2.24	2.55	2.88	3.23	3.60	3.98	4.38	5.22	6.09	6.98	7.89	8.80
1.0	1.08	1.31	1.56	1.82	2.11	2.41	2.73	3.07	3.42	3.79	4.18	5.00	5.85	6.74	7.64	8.54
1.2	0.946	1.15	1.38	1.62	1.88	2.16	2.46	2.78	3.11	3.46	3.82	4.59	5.41	6.27	7.15	8.04
1.4	0.837	1.02	1.23	1.46	1.70	1.96	2.23	2.53	2.84	3.17	3.51	4.24	5.02	5.84	6.69	7.56
1.6	0.748	0.919	1.11	1.32	1.54	1.78	2.04	2.32	2.61	2.91	3.24	3.92	4.66	5.45	6.27	7.10
1.8	0.676	0.832	1.01	1.20	1.41	1.64	1.88	2.13	2.41	2.69	3.00	3.65	4.35	5.09	5.88	6.67
2.0	0.616	0.760	0.924	1.11	1.30	1.51	1.73	1.97	2.23	2.50	2.79	3.40	4.07	4.78	5.52	6.28
2.2	0.565	0.699	0.852	1.02	1.21	1.40	1.61	1.84	2.08	2.33	2.60	3.19	3.82	4.49	5.20	5.93
2.4	0.522	0.647	0.790	0.948	1.12	1.31	1.51	1.72	1.94	2.19	2.44	2.99	3.59	4.24	4.91	5.61
2.6	0.485	0.602	0.735	0.885	1.05	1.22	1.41	1.61	1.82	2.05	2.30	2.82	3.39	4.00	4.65	5.32
2.8	0.453	0.562	0.688	0.829	0.983	1.15	1.33	1.52	1.72	1.94	2.17	2.66	3.21	3.79	4.42	5.05
3.0	0.424	0.528	0.646	0.779	0.926	1.08	1.25	1.43	1.62	1.83	2.05	2.52	3.04	3.60	4.20	4.81
x	0.000	0.008	0.029	0.056	0.089	0.125	0.164	0.204	0.246	0.289	0.333	0.424	0.516	0.610	0.704	0.800

Table 8-9 (continued)
Coefficients, C, for Eccentrically Loaded Weld Groups
Angle = 75°

Available strength of a weld group, ϕR_n or R_n/Ω, is determined with
$R_n = CC_1Dl$ ($\phi = 0.75$, $\Omega = 2.00$)

LRFD	ASD
$C_{min} = \dfrac{P_u}{\phi C_1 Dl} \quad D_{min} = \dfrac{P_u}{\phi C C_1 l} \quad l_{min} = \dfrac{P_u}{\phi C C_1 D}$	$C_{min} = \dfrac{\Omega P_a}{C_1 Dl} \quad D_{min} = \dfrac{\Omega P_a}{C C_1 l} \quad l_{min} = \dfrac{\Omega P_a}{C C_1 D}$

where
P = required force, P_u or P_a, kips
D = number of sixteenths-of-an-inch in the fillet weld size
l = characteristic length of weld group, in.
a = e_x/l
e_x = horizontal component of eccentricity of P with respect to centroid of weld group, in.
C = coefficient tabulated below
C_1 = electrode strength coefficient from Table 8-3 (1.0 for E70XX electrodes)

Note: Shaded values indicate the value is based on the greatest available strength permitted by AISC *Specification* Sections J2.4, J2.4(a), J2.4(b) and J2.4(c).

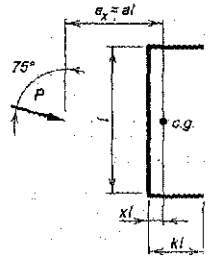

a	k															
	0	0.1	0.2	0.3	0.4	0.5	0.6	0.7	0.8	0.9	1.0	1.2	1.4	1.6	1.8	2.0
0.00	2.74	3.11	3.49	3.88	4.26	4.65	5.03	5.42	5.80	6.19	6.57	7.34	8.11	8.88	9.65	10.4
0.10	2.59	2.94	3.30	3.68	4.07	4.47	4.88	5.28	5.69	6.08	6.48	7.27	8.05	8.83	9.61	10.4
0.15	2.50	2.84	3.19	3.56	3.94	4.34	4.75	5.16	5.57	5.98	6.39	7.19	7.98	8.77	9.55	10.3
0.20	2.43	2.76	3.09	3.46	3.84	4.24	4.63	5.04	5.45	5.86	6.28	7.10	7.90	8.70	9.49	10.3
0.25	2.35	2.68	3.01	3.37	3.76	4.15	4.55	4.95	5.35	5.75	6.16	6.99	7.81	8.62	9.42	10.2
0.30	2.28	2.61	2.93	3.29	3.68	4.07	4.47	4.88	5.28	5.68	6.07	6.88	7.71	8.53	9.34	10.1
0.40	2.16	2.48	2.80	3.15	3.53	3.93	4.33	4.74	5.15	5.55	5.95	6.75	7.54	8.33	9.14	9.97
0.50	2.05	2.37	2.68	3.02	3.40	3.79	4.20	4.61	5.02	5.43	5.84	6.64	7.44	8.22	9.01	9.80
0.60	1.94	2.25	2.57	2.90	3.27	3.66	4.06	4.48	4.89	5.31	5.73	6.55	7.35	8.14	8.92	9.70
0.70	1.85	2.15	2.46	2.79	3.15	3.53	3.93	4.35	4.77	5.19	5.61	6.44	7.26	8.06	8.85	9.63
0.80	1.75	2.05	2.36	2.69	3.03	3.41	3.81	4.22	4.64	5.06	5.49	6.33	7.16	7.98	8.78	9.57
0.90	1.67	1.96	2.26	2.59	2.93	3.29	3.69	4.09	4.51	4.93	5.36	6.22	7.06	7.89	8.70	9.50
1.0	1.59	1.87	2.17	2.49	2.83	3.18	3.57	3.97	4.38	4.81	5.24	6.10	6.95	7.79	8.62	9.43
1.2	1.45	1.72	2.00	2.31	2.64	2.98	3.35	3.74	4.14	4.56	4.99	5.85	6.72	7.59	8.43	9.27
1.4	1.33	1.58	1.86	2.15	2.47	2.80	3.15	3.53	3.92	4.33	4.75	5.61	6.48	7.36	8.23	9.08
1.6	1.22	1.46	1.73	2.01	2.31	2.63	2.97	3.33	3.71	4.11	4.52	5.37	6.24	7.12	8.00	8.87
1.8	1.13	1.36	1.61	1.88	2.17	2.48	2.81	3.15	3.52	3.90	4.30	5.14	6.00	6.88	7.77	8.65
2.0	1.05	1.27	1.51	1.77	2.04	2.34	2.66	2.99	3.34	3.71	4.10	4.92	5.77	6.65	7.53	8.42
2.2	0.975	1.18	1.41	1.66	1.93	2.21	2.52	2.84	3.18	3.54	3.91	4.71	5.54	6.41	7.30	8.19
2.4	0.912	1.11	1.33	1.57	1.82	2.10	2.39	2.70	3.03	3.38	3.74	4.51	5.33	6.18	7.06	7.95
2.6	0.856	1.04	1.26	1.48	1.73	1.99	2.27	2.57	2.89	3.23	3.58	4.32	5.12	5.96	6.83	7.71
2.8	0.806	0.986	1.19	1.41	1.65	1.90	2.17	2.46	2.76	3.09	3.43	4.15	4.93	5.75	6.61	7.48
3.0	0.762	0.933	1.13	1.34	1.57	1.81	2.07	2.35	2.64	2.96	3.29	3.99	4.75	5.55	6.39	7.26
x	0.000	0.008	0.029	0.056	0.089	0.125	0.164	0.204	0.246	0.289	0.333	0.424	0.516	0.610	0.704	0.800

Table 8-10
Coefficients, C, for Eccentrically Loaded Weld Groups
Angle = 0°

Available strength of a weld group, ϕR_n or R_n/Ω, is determined with
$R_n = CC_1Dl$ ($\phi = 0.75$, $\Omega = 2.00$)

LRFD	ASD
$C_{min} = \dfrac{P_u}{\phi C_1 Dl}$ $D_{min} = \dfrac{P_u}{\phi C C_1 l}$ $l_{min} = \dfrac{P_u}{\phi C C_1 D}$	$C_{min} = \dfrac{\Omega P_a}{C_1 Dl}$ $D_{min} = \dfrac{\Omega P_a}{C C_1 l}$ $l_{min} = \dfrac{\Omega P_a}{C C_1 D}$

where
P = required force, P_u or P_a, kips
D = number of sixteenths-of-an-inch in the fillet weld size
l = characteristic length of weld group, in.
$a = e_x/l$
e_x = horizontal component of eccentricity of P with respect to centroid of weld group, in.
C = coefficient tabulated below
C_1 = electrode strength coefficient from Table 8-3 (1.0 for E70XX electrodes)

Note: Shaded values indicate the value is based on the greatest available strength permitted by AISC *Specification* Sections J2.4, J2.4(a), J2.4(b) and J2.4(c).

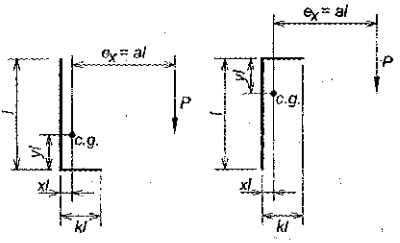

a	k															
	0	0.1	0.2	0.3	0.4	0.5	0.6	0.7	0.8	0.9	1.0	1.2	1.4	1.6	1.8	2.0
0.00	1.86	2.04	2.23	2.41	2.69	2.97	3.25	3.53	3.80	4.08	4.36	4.92	5.47	6.03	6.59	7.15
0.10	1.86	2.04	2.28	2.53	2.78	3.04	3.31	3.57	3.84	4.11	4.38	4.93	5.48	6.00	6.55	7.10
0.15	1.83	2.03	2.25	2.49	2.74	2.99	3.24	3.50	3.75	4.01	4.28	4.81	5.34	5.89	6.44	7.00
0.20	1.76	1.97	2.18	2.40	2.64	2.87	3.11	3.36	3.60	3.85	4.11	4.62	5.14	5.66	6.20	6.73
0.25	1.66	1.86	2.07	2.29	2.50	2.73	2.95	3.19	3.42	3.66	3.90	4.40	4.90	5.42	5.94	6.47
0.30	1.55	1.74	1.94	2.15	2.36	2.57	2.78	3.00	3.22	3.45	3.69	4.17	4.66	5.17	5.68	6.20
0.40	1.33	1.49	1.67	1.85	2.05	2.24	2.44	2.63	2.84	3.05	3.27	3.73	4.20	4.69	5.19	5.70
0.50	1.15	1.29	1.44	1.60	1.77	1.95	2.13	2.31	2.50	2.70	2.90	3.33	3.78	4.25	4.74	5.23
0.60	0.999	1.12	1.25	1.39	1.54	1.70	1.87	2.04	2.21	2.40	2.59	2.99	3.42	3.87	4.34	4.82
0.70	0.879	0.987	1.10	1.22	1.35	1.50	1.66	1.82	1.98	2.15	2.32	2.71	3.11	3.55	4.00	4.47
0.80	0.783	0.878	0.978	1.09	1.20	1.34	1.48	1.63	1.78	1.94	2.11	2.46	2.85	3.27	3.70	4.15
0.90	0.704	0.790	0.879	0.976	1.08	1.20	1.33	1.48	1.62	1.77	1.92	2.26	2.63	3.02	3.43	3.86
1.0	0.639	0.717	0.797	0.885	0.983	1.09	1.21	1.35	1.48	1.62	1.76	2.08	2.43	2.80	3.20	3.61
1.2	0.538	0.603	0.671	0.745	0.828	0.922	1.03	1.14	1.26	1.38	1.51	1.79	2.10	2.44	2.80	3.18
1.4	0.464	0.520	0.579	0.643	0.715	0.796	0.888	0.991	1.10	1.21	1.32	1.57	1.85	2.15	2.48	2.83
1.6	0.408	0.457	0.508	0.564	0.628	0.700	0.783	0.874	0.972	1.07	1.17	1.40	1.65	1.93	2.22	2.54
1.8	0.363	0.407	0.453	0.503	0.560	0.625	0.699	0.782	0.871	0.957	1.05	1.26	1.49	1.74	2.01	2.31
2.0	0.328	0.367	0.408	0.454	0.505	0.564	0.632	0.706	0.788	0.867	0.952	1.14	1.35	1.58	1.84	2.11
2.2	0.298	0.334	0.372	0.413	0.460	0.514	0.576	0.644	0.719	0.792	0.870	1.04	1.24	1.45	1.69	1.94
2.4	0.274	0.306	0.341	0.379	0.422	0.472	0.529	0.592	0.661	0.728	0.801	0.960	1.14	1.34	1.56	1.79
2.6	0.253	0.283	0.315	0.350	0.390	0.437	0.489	0.547	0.611	0.674	0.741	0.890	1.06	1.24	1.45	1.67
2.8	0.235	0.263	0.293	0.325	0.363	0.406	0.455	0.509	0.568	0.628	0.690	0.829	0.986	1.16	1.35	1.56
3.0	0.219	0.246	0.273	0.304	0.339	0.379	0.425	0.475	0.531	0.587	0.645	0.776	0.924	1.09	1.27	1.46
x	0.000	0.005	0.017	0.035	0.057	0.083	0.113	0.144	0.178	0.213	0.250	0.327	0.408	0.492	0.579	0.667
y	0.500	0.455	0.417	0.385	0.357	0.333	0.313	0.294	0.278	0.263	0.250	0.227	0.208	0.192	0.179	0.167

Table 8-10 (continued)
Coefficients, C, for Eccentrically Loaded Weld Groups
Angle = 15°

Available strength of a weld group, ϕR_n or R_n/Ω, is determined with
$R_n = CC_1Dl$ ($\phi = 0.75$, $\Omega = 2.00$)

LRFD	ASD
$C_{min} = \dfrac{P_u}{\phi C_1 Dl}$ $D_{min} = \dfrac{P_u}{\phi C C_1 l}$ $l_{min} = \dfrac{P_u}{\phi C C_1 D}$	$C_{min} = \dfrac{\Omega P_a}{C_1 Dl}$ $D_{min} = \dfrac{\Omega P_a}{C C_1 l}$ $l_{min} = \dfrac{\Omega P_a}{C C_1 D}$

where
P = required force, P_u or P_a, kips
D = number of sixteenths-of-an-inch in the fillet weld size
l = characteristic length of weld group, in.
a = e_x/l
e_x = horizontal component of eccentricity of P with respect to centroid of weld group, in.
C = coefficient tabulated below
C_1 = electrode strength coefficient from Table 8-3 (1.0 for E70XX electrodes)

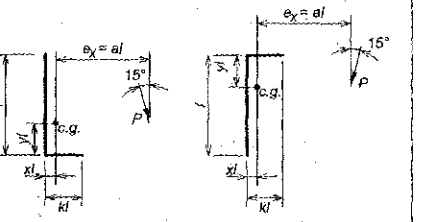

Note: Shaded values indicate the value is based on the greatest available strength permitted by AISC Specification Sections J2.4, J2.4(a), J2.4(b) and J2.4(c).

a	k															
	0	0.1	0.2	0.3	0.4	0.5	0.6	0.7	0.8	0.9	1.0	1.2	1.4	1.6	1.8	2.0
0.00	1.98	2.20	2.47	2.74	3.01	3.29	3.56	3.83	4.10	4.38	4.65	5.19	5.74	6.28	6.83	7.37
0.10	1.90	2.13	2.41	2.68	2.97	3.25	3.53	3.81	4.09	4.36	4.64	5.18	5.73	6.28	6.83	7.37
0.15	1.84	2.10	2.35	2.62	2.88	3.15	3.42	3.69	3.96	4.23	4.50	5.04	5.58	6.12	6.66	7.20
0.20	1.76	1.99	2.26	2.52	2.77	3.02	3.28	3.53	3.79	4.05	4.31	4.84	5.37	5.90	6.44	6.98
0.25	1.65	1.87	2.11	2.37	2.63	2.87	3.11	3.36	3.60	3.85	4.10	4.61	5.13	5.66	6.19	6.72
0.30	1.55	1.75	1.97	2.20	2.45	2.69	2.93	3.16	3.40	3.64	3.88	4.38	4.89	5.41	5.93	6.46
0.40	1.34	1.51	1.69	1.89	2.10	2.33	2.56	2.77	2.99	3.21	3.44	3.91	4.41	4.91	5.42	5.94
0.50	1.16	1.31	1.46	1.63	1.81	2.01	2.21	2.42	2.63	2.83	3.05	3.50	3.97	4.45	4.95	5.46
0.60	1.01	1.14	1.27	1.42	1.58	1.75	1.93	2.13	2.32	2.51	2.71	3.14	3.59	4.06	4.54	5.04
0.70	0.895	1.01	1.12	1.25	1.39	1.54	1.71	1.89	2.07	2.25	2.44	2.84	3.26	3.71	4.18	4.66
0.80	0.799	0.898	1.00	1.11	1.24	1.38	1.53	1.69	1.86	2.03	2.21	2.58	2.99	3.41	3.86	4.32
0.90	0.720	0.809	0.901	1.00	1.11	1.24	1.38	1.53	1.69	1.85	2.01	2.36	2.75	3.15	3.58	4.03
1.0	0.654	0.735	0.818	0.910	1.01	1.13	1.25	1.39	1.54	1.69	1.85	2.18	2.54	2.92	3.33	3.76
1.2	0.552	0.620	0.690	0.767	0.854	0.951	1.06	1.18	1.31	1.45	1.58	1.87	2.20	2.54	2.92	3.31
1.4	0.477	0.535	0.596	0.662	0.737	0.822	0.918	1.03	1.14	1.26	1.38	1.64	1.93	2.25	2.58	2.94
1.6	0.420	0.471	0.524	0.582	0.648	0.724	0.809	0.905	1.01	1.11	1.22	1.46	1.72	2.01	2.32	2.65
1.8	0.374	0.420	0.467	0.519	0.578	0.646	0.723	0.809	0.902	0.997	1.09	1.31	1.55	1.81	2.09	2.40
2.0	0.338	0.378	0.421	0.468	0.522	0.583	0.653	0.731	0.816	0.902	0.991	1.19	1.41	1.65	1.91	2.19
2.2	0.308	0.345	0.383	0.426	0.475	0.532	0.596	0.666	0.744	0.824	0.905	1.08	1.29	1.51	1.75	2.01
2.4	0.282	0.316	0.352	0.391	0.436	0.488	0.547	0.612	0.684	0.757	0.833	0.999	1.19	1.39	1.62	1.86
2.6	0.261	0.292	0.325	0.362	0.403	0.451	0.506	0.566	0.632	0.701	0.771	0.925	1.10	1.29	1.50	1.73
2.8	0.242	0.272	0.302	0.336	0.375	0.420	0.470	0.526	0.588	0.652	0.717	0.862	1.03	1.21	1.40	1.62
3.0	0.226	0.254	0.282	0.314	0.350	0.392	0.439	0.492	0.549	0.610	0.671	0.806	0.960	1.13	1.32	1.52
x	0.000	0.005	0.017	0.035	0.057	0.083	0.113	0.144	0.178	0.213	0.250	0.327	0.408	0.492	0.579	0.667
$\bar{y}$	0.500	0.455	0.417	0.385	0.357	0.333	0.313	0.294	0.278	0.263	0.250	0.227	0.208	0.192	0.179	0.167

Table 8-10 (continued)
Coefficients, C, for Eccentrically Loaded Weld Groups
Angle = 30°

Available strength of a weld group, ϕR_n or R_n/Ω, is determined with
$R_n = CC_1Dl$ ($\phi = 0.75$, $\Omega = 2.00$)

LRFD	ASD
$C_{min} = \frac{P_u}{\phi C_1 Dl}$ $D_{min} = \frac{P_u}{\phi C C_1 l}$ $l_{min} = \frac{P_u}{\phi C C_1 D}$	$C_{min} = \frac{\Omega P_a}{C_1 Dl}$ $D_{min} = \frac{\Omega P_a}{C C_1 l}$ $l_{min} = \frac{\Omega P_a}{C C_1 D}$

where
P = required force, P_u or P_a, kips
D = number of sixteenths-of-an-inch in the fillet weld size
l = characteristic length of weld group, in.
$a = e_x/l$
e_x = horizontal component of eccentricity of P with respect to centroid of weld group, in.
C = coefficient tabulated below
C_1 = electrode strength coefficient from Table 8-3 (1.0 for E70XX electrodes)

Note: Shaded values indicate the value is based on the greatest available strength permitted by AISC *Specification* Sections J2.4, J2.4(a), J2.4(b) and J2.4(c).

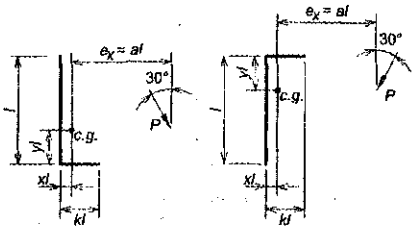

a	k															
	0	0.1	0.2	0.3	0.4	0.5	0.6	0.7	0.8	0.9	1.0	1.2	1.4	1.6	1.8	2.0
0.00	2.18	2.44	2.70	2.96	3.21	3.47	3.73	3.98	4.24	4.50	4.76	5.27	5.78	6.30	6.81	7.33
0.10	2.02	2.35	2.66	2.96	3.24	3.52	3.79	4.06	4.33	4.59	4.86	5.38	5.90	6.43	6.95	7.47
0.15	1.92	2.22	2.53	2.84	3.13	3.41	3.69	3.96	4.23	4.49	4.76	5.29	5.81	6.34	6.86	7.38
0.20	1.82	2.09	2.38	2.67	2.97	3.26	3.53	3.80	4.07	4.33	4.60	5.13	5.65	6.18	6.71	7.23
0.25	1.71	1.96	2.22	2.50	2.78	3.06	3.34	3.60	3.87	4.13	4.39	4.92	5.45	5.98	6.51	7.05
0.30	1.61	1.83	2.07	2.32	2.59	2.86	3.13	3.40	3.65	3.91	4.17	4.70	5.23	5.76	6.30	6.83
0.40	1.41	1.59	1.79	2.01	2.23	2.47	2.72	2.98	3.24	3.48	3.72	4.23	4.75	5.28	5.82	6.37
0.50	1.23	1.39	1.56	1.74	1.94	2.15	2.37	2.61	2.85	3.09	3.32	3.80	4.30	4.83	5.36	5.90
0.60	1.08	1.22	1.37	1.53	1.70	1.89	2.09	2.30	2.53	2.75	2.97	3.43	3.91	4.41	4.94	5.47
0.70	0.964	1.09	1.21	1.35	1.51	1.67	1.86	2.05	2.26	2.48	2.68	3.12	3.58	4.06	4.56	5.07
0.80	0.865	0.974	1.09	1.21	1.35	1.50	1.66	1.84	2.04	2.24	2.44	2.84	3.28	3.74	4.22	4.72
0.90	0.783	0.881	0.983	1.09	1.22	1.36	1.51	1.67	1.85	2.04	2.23	2.61	3.03	3.47	3.93	4.40
1.0	0.714	0.803	0.896	0.997	1.11	1.24	1.38	1.53	1.70	1.88	2.05	2.41	2.80	3.22	3.66	4.12
1.2	0.606	0.681	0.759	0.844	0.940	1.05	1.17	1.30	1.45	1.61	1.76	2.08	2.43	2.81	3.22	3.64
1.4	0.525	0.590	0.657	0.731	0.814	0.908	1.02	1.13	1.26	1.40	1.53	1.82	2.14	2.49	2.86	3.25
1.6	0.463	0.520	0.579	0.644	0.717	0.801	0.897	1.00	1.12	1.24	1.36	1.62	1.91	2.23	2.57	2.92
1.8	0.414	0.464	0.517	0.575	0.641	0.716	0.802	0.897	1.00	1.11	1.22	1.46	1.72	2.01	2.32	2.66
2.0	0.374	0.419	0.467	0.519	0.579	0.647	0.725	0.811	0.905	1.01	1.11	1.32	1.57	1.83	2.12	2.43
2.2	0.341	0.382	0.425	0.473	0.528	0.590	0.661	0.740	0.826	0.919	1.01	1.21	1.44	1.68	1.95	2.24
2.4	0.313	0.351	0.391	0.434	0.485	0.543	0.608	0.680	0.760	0.845	0.930	1.12	1.32	1.55	1.80	2.07
2.6	0.289	0.324	0.361	0.402	0.448	0.502	0.562	0.629	0.703	0.782	0.861	1.03	1.23	1.44	1.67	1.92
2.8	0.269	0.302	0.336	0.373	0.417	0.467	0.523	0.585	0.654	0.727	0.801	0.963	1.15	1.35	1.56	1.80
3.0	0.251	0.282	0.314	0.349	0.389	0.436	0.489	0.547	0.611	0.680	0.749	0.901	1.07	1.26	1.47	1.69
x	0.000	0.005	0.017	0.035	0.057	0.083	0.113	0.144	0.178	0.213	0.250	0.327	0.408	0.492	0.579	0.667
y	0.500	0.455	0.417	0.385	0.357	0.333	0.313	0.294	0.278	0.263	0.250	0.227	0.208	0.192	0.179	0.167

Table 8-10 (continued)
Coefficients, C, for Eccentrically Loaded Weld Groups
Angle = 45°

Available strength of a weld group, ϕR_n or R_n/Ω, is determined with
$R_n = CC_1Dl$ ($\phi = 0.75$, $\Omega = 2.00$)

LRFD	ASD
$C_{min} = \dfrac{P_u}{\phi C_1 Dl}$ $D_{min} = \dfrac{P_u}{\phi C C_1 l}$ $l_{min} = \dfrac{P_u}{\phi C C_1 D}$	$C_{min} = \dfrac{\Omega P_a}{C_1 Dl}$ $D_{min} = \dfrac{\Omega P_a}{C C_1 l}$ $l_{min} = \dfrac{\Omega P_a}{C C_1 D}$

where
P = required force, P_u or P_a, kips
D = number of sixteenths-of-an-inch in the fillet weld size
l = characteristic length of weld group, in.
a = e_x/l
e_x = horizontal component of eccentricity of P with respect to centroid of weld group, in.
C = coefficient tabulated below
C_1 = electrode strength coefficient from Table 8-3 (1.0 for E70XX electrodes)

Note: Shaded values indicate the value is based on the greatest available strength permitted by AISC *Specification* Sections J2.4, J2.4(a), J2.4(b) and J2.4(c).

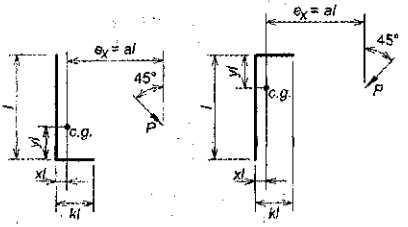

a	k															
	0	0.1	0.2	0.3	0.4	0.5	0.6	0.7	0.8	0.9	1.0	1.2	1.4	1.6	1.8	2.0
0.00	2.41	2.57	2.80	3.04	3.27	3.51	3.74	3.97	4.21	4.44	4.67	5.14	5.61	6.08	6.54	7.01
0.10	2.24	2.54	2.83	3.12	3.40	3.67	3.94	4.20	4.45	4.71	4.95	5.44	5.93	6.41	6.89	7.36
0.15	2.09	2.41	2.71	3.00	3.28	3.57	3.85	4.13	4.40	4.67	4.93	5.43	5.92	6.41	6.90	7.38
0.20	1.96	2.26	2.56	2.84	3.13	3.42	3.71	4.00	4.28	4.56	4.84	5.35	5.85	6.35	6.85	7.34
0.25	1.85	2.12	2.40	2.68	2.96	3.25	3.54	3.83	4.12	4.41	4.69	5.22	5.74	6.25	6.75	7.25
0.30	1.74	1.99	2.25	2.51	2.79	3.07	3.36	3.64	3.93	4.23	4.52	5.06	5.59	6.11	6.63	7.14
0.40	1.55	1.76	1.98	2.21	2.46	2.71	2.98	3.26	3.54	3.83	4.13	4.68	5.23	5.77	6.31	6.84
0.50	1.38	1.56	1.75	1.95	2.17	2.40	2.64	2.90	3.17	3.45	3.74	4.29	4.84	5.40	5.95	6.49
0.60	1.23	1.39	1.56	1.74	1.93	2.14	2.36	2.60	2.85	3.12	3.39	3.92	4.46	5.02	5.58	6.13
0.70	1.11	1.25	1.40	1.56	1.73	1.92	2.13	2.35	2.59	2.84	3.10	3.59	4.12	4.66	5.21	5.77
0.80	1.00	1.13	1.26	1.41	1.57	1.74	1.93	2.14	2.36	2.59	2.84	3.30	3.80	4.33	4.87	5.42
0.90	0.915	1.03	1.15	1.28	1.43	1.59	1.76	1.96	2.16	2.38	2.61	3.06	3.53	4.04	4.56	5.10
1.0	0.839	0.945	1.06	1.18	1.31	1.46	1.62	1.80	2.00	2.20	2.42	2.84	3.29	3.77	4.28	4.80
1.2	0.719	0.809	0.902	1.00	1.12	1.25	1.39	1.55	1.72	1.90	2.10	2.48	2.88	3.32	3.79	4.28
1.4	0.627	0.705	0.786	0.875	0.975	1.09	1.22	1.36	1.51	1.67	1.84	2.19	2.56	2.96	3.39	3.85
1.6	0.555	0.624	0.695	0.774	0.863	0.964	1.08	1.20	1.34	1.49	1.64	1.96	2.30	2.66	3.06	3.48
1.8	0.498	0.559	0.623	0.693	0.773	0.865	0.968	1.08	1.20	1.34	1.48	1.76	2.08	2.42	2.78	3.17
2.0	0.451	0.506	0.564	0.628	0.700	0.783	0.877	0.980	1.09	1.21	1.34	1.61	1.89	2.21	2.55	2.91
2.2	0.412	0.462	0.515	0.573	0.639	0.716	0.801	0.896	0.999	1.11	1.23	1.47	1.74	2.03	2.35	2.69
2.4	0.379	0.425	0.474	0.527	0.588	0.659	0.738	0.825	0.920	1.02	1.13	1.36	1.61	1.88	2.17	2.49
2.6	0.351	0.394	0.438	0.488	0.545	0.610	0.683	0.764	0.853	0.948	1.05	1.26	1.49	1.75	2.03	2.32
2.8	0.327	0.366	0.408	0.454	0.507	0.568	0.636	0.712	0.794	0.883	0.979	1.18	1.39	1.63	1.89	2.18
3.0	0.306	0.343	0.381	0.424	0.474	0.531	0.595	0.666	0.743	0.826	0.916	1.10	1.31	1.53	1.78	2.04
x	0.000	0.005	0.017	0.035	0.057	0.083	0.113	0.144	0.178	0.213	0.250	0.327	0.408	0.492	0.579	0.667
y	0.500	0.455	0.417	0.385	0.357	0.333	0.313	0.294	0.278	0.263	0.250	0.227	0.208	0.192	0.179	0.167

Table 8-10 (continued)
Coefficients, C, for Eccentrically Loaded Weld Groups
Angle = 60°

Available strength of a weld group, ϕR_n or R_n/Ω, is determined with
$R_n = CC_1Dl$ ($\phi = 0.75$, $\Omega = 2.00$)

LRFD	ASD
$C_{min} = \frac{P_u}{\phi C_1 Dl}$ $D_{min} = \frac{P_u}{\phi C C_1 l}$ $l_{min} = \frac{P_u}{\phi C C_1 D}$	$C_{min} = \frac{\Omega P_a}{C_1 Dl}$ $D_{min} = \frac{\Omega P_a}{C C_1 l}$ $l_{min} = \frac{\Omega P_a}{C C_1 D}$

where
P = required force, P_u or P_a, kips
D = number of sixteenths-of-an-inch in the fillet weld size
l = characteristic length of weld group, in.
$a = e_x/l$
e_x = horizontal component of eccentricity of P with respect to centroid of weld group, in.
C = coefficient tabulated below
C_1 = electrode strength coefficient from Table 8-3 (1.0 for E70XX electrodes)

Note: Shaded values indicate the value is based on the greatest available strength permitted by AISC *Specification* Sections J2.4, J2.4(a), J2.4(b) and J2.4(c).

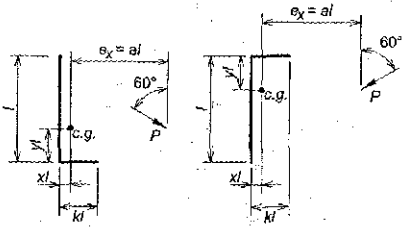

a	k															
	0	0.1	0.2	0.3	0.4	0.5	0.6	0.7	0.8	0.9	1.0	1.2	1.4	1.6	1.8	2.0
0.00	2.60	2.79	3.01	3.23	3.44	3.66	3.88	4.10	4.32	4.54	4.76	5.19	5.63	6.07	6.50	6.94
0.10	2.43	2.70	2.97	3.23	3.48	3.72	3.96	4.19	4.42	4.64	4.87	5.31	5.75	6.18	6.62	7.05
0.15	2.31	2.59	2.86	3.13	3.40	3.66	3.91	4.16	4.40	4.64	4.87	5.32	5.77	6.21	6.64	7.08
0.20	2.18	2.47	2.74	3.01	3.29	3.56	3.83	4.09	4.35	4.59	4.84	5.30	5.76	6.21	6.65	7.09
0.25	2.07	2.35	2.62	2.89	3.16	3.44	3.72	3.99	4.26	4.52	4.77	5.26	5.73	6.19	6.64	7.08
0.30	1.97	2.24	2.50	2.76	3.03	3.31	3.59	3.88	4.16	4.43	4.69	5.20	5.68	6.15	6.61	7.06
0.40	1.79	2.03	2.27	2.52	2.77	3.04	3.32	3.61	3.90	4.19	4.48	5.02	5.54	6.04	6.52	6.98
0.50	1.63	1.84	2.06	2.29	2.53	2.78	3.05	3.34	3.63	3.93	4.22	4.79	5.34	5.87	6.37	6.86
0.60	1.49	1.68	1.88	2.09	2.31	2.55	2.81	3.08	3.37	3.66	3.96	4.55	5.11	5.66	6.19	6.69
0.70	1.37	1.54	1.73	1.92	2.12	2.35	2.59	2.85	3.12	3.41	3.71	4.30	4.87	5.43	5.97	6.50
0.80	1.26	1.42	1.59	1.77	1.96	2.17	2.40	2.64	2.90	3.18	3.47	4.05	4.64	5.20	5.74	6.28
0.90	1.17	1.32	1.47	1.63	1.81	2.01	2.23	2.46	2.71	2.97	3.25	3.82	4.39	4.95	5.50	6.04
1.0	1.08	1.22	1.36	1.52	1.69	1.87	2.08	2.30	2.53	2.78	3.05	3.60	4.15	4.71	5.26	5.80
1.2	0.946	1.07	1.19	1.32	1.47	1.64	1.82	2.02	2.23	2.46	2.70	3.21	3.72	4.26	4.80	5.34
1.4	0.837	0.942	1.05	1.17	1.30	1.45	1.62	1.80	1.99	2.20	2.42	2.88	3.36	3.86	4.38	4.92
1.6	0.748	0.842	0.939	1.04	1.16	1.30	1.45	1.61	1.79	1.98	2.18	2.60	3.04	3.52	4.02	4.53
1.8	0.676	0.760	0.847	0.943	1.05	1.17	1.31	1.46	1.62	1.80	1.98	2.37	2.78	3.23	3.70	4.19
2.0	0.616	0.692	0.772	0.859	0.958	1.07	1.20	1.33	1.48	1.64	1.82	2.18	2.55	2.97	3.42	3.88
2.2	0.565	0.635	0.708	0.788	0.879	0.983	1.10	1.23	1.36	1.51	1.67	2.01	2.36	2.75	3.17	3.61
2.4	0.522	0.586	0.653	0.728	0.812	0.908	1.02	1.13	1.26	1.40	1.55	1.86	2.19	2.56	2.95	3.37
2.6	0.485	0.544	0.607	0.675	0.754	0.844	0.944	1.05	1.17	1.30	1.44	1.74	2.05	2.39	2.76	3.16
2.8	0.453	0.508	0.566	0.630	0.704	0.787	0.881	0.984	1.10	1.22	1.35	1.63	1.92	2.24	2.59	2.97
3.0	0.424	0.476	0.530	0.590	0.659	0.738	0.826	0.923	1.03	1.14	1.26	1.53	1.80	2.11	2.44	2.80
x	0.000	0.005	0.017	0.035	0.057	0.083	0.113	0.144	0.178	0.213	0.250	0.327	0.408	0.492	0.579	0.667
y	0.500	0.455	0.417	0.385	0.357	0.333	0.313	0.294	0.278	0.263	0.250	0.227	0.208	0.192	0.179	0.167

Table 8-10 (continued)
Coefficients, C, for Eccentrically Loaded Weld Groups
Angle = 75°

Available strength of a weld group, ϕR_n or R_n/Ω, is determined with
$R_n = CC_1Dl$ ($\phi = 0.75$, $\Omega = 2.00$)

LRFD	ASD
$C_{min} = \frac{P_u}{\phi C_1 Dl}$ $D_{min} = \frac{P_u}{\phi C C_1 l}$ $l_{min} = \frac{P_u}{\phi C C_1 D}$	$C_{min} = \frac{\Omega P_a}{C_1 Dl}$ $D_{min} = \frac{\Omega P_a}{C C_1 l}$ $l_{min} = \frac{\Omega P_a}{C C_1 D}$

where
P = required force, P_u or P_a, kips
D = number of sixteenths-of-an-inch in the fillet weld size
l = characteristic length of weld group, in.
$a = e_x/l$
e_x = horizontal component of eccentricity of P with respect to centroid of weld group, in.
C = coefficient tabulated below
C_1 = electrode strength coefficient from Table 8-3 (1.0 for E70XX electrodes)

Note: Shaded values indicate the value is based on the greatest available strength permitted by AISC *Specification* Sections J2.4, J2.4(a), J2.4(b) and J2.4(c).

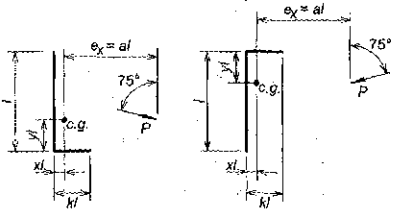

a	k															
	0	0.1	0.2	0.3	0.4	0.5	0.6	0.7	0.8	0.9	1.0	1.2	1.4	1.6	1.8	2.0
0.00	2.74	2.92	3.11	3.30	3.49	3.69	3.88	4.07	4.26	4.46	4.65	5.03	5.42	5.80	6.19	6.57
0.10	2.59	2.86	3.11	3.31	3.50	3.69	3.88	4.07	4.27	4.46	4.65	5.04	5.42	5.81	6.20	6.58
0.15	2.50	2.78	3.04	3.28	3.50	3.70	3.90	4.09	4.28	4.47	4.67	5.05	5.44	5.83	6.21	6.60
0.20	2.43	2.69	2.96	3.22	3.46	3.68	3.89	4.09	4.29	4.48	4.68	5.06	5.45	5.84	6.22	6.61
0.25	2.35	2.62	2.88	3.14	3.40	3.63	3.86	4.07	4.28	4.48	4.68	5.07	5.46	5.84	6.23	6.61
0.30	2.28	2.55	2.80	3.07	3.33	3.58	3.82	4.04	4.26	4.46	4.67	5.06	5.46	5.84	6.23	6.62
0.40	2.16	2.41	2.66	2.92	3.19	3.45	3.71	3.95	4.18	4.41	4.62	5.04	5.44	5.83	6.23	6.61
0.50	2.05	2.29	2.53	2.78	3.05	3.32	3.58	3.84	4.09	4.32	4.55	4.99	5.40	5.81	6.21	6.60
0.60	1.94	2.18	2.41	2.64	2.90	3.18	3.45	3.72	3.97	4.22	4.46	4.92	5.35	5.77	6.17	6.57
0.70	1.85	2.07	2.29	2.52	2.77	3.04	3.31	3.58	3.85	4.11	4.36	4.83	5.28	5.71	6.12	6.53
0.80	1.75	1.97	2.18	2.40	2.64	2.90	3.18	3.45	3.73	3.99	4.25	4.74	5.20	5.64	6.06	6.48
0.90	1.67	1.87	2.08	2.29	2.52	2.77	3.04	3.32	3.60	3.87	4.14	4.65	5.12	5.57	6.00	6.42
1.0	1.59	1.79	1.98	2.19	2.41	2.65	2.92	3.19	3.47	3.75	4.02	4.55	5.04	5.50	5.94	6.37
1.2	1.45	1.63	1.81	2.00	2.21	2.44	2.68	2.95	3.22	3.50	3.78	4.33	4.85	5.34	5.81	6.25
1.4	1.33	1.49	1.66	1.84	2.03	2.24	2.47	2.72	2.99	3.27	3.55	4.11	4.65	5.16	5.65	6.12
1.6	1.22	1.37	1.53	1.69	1.88	2.07	2.29	2.53	2.78	3.05	3.32	3.88	4.43	4.97	5.48	5.96
1.8	1.13	1.27	1.41	1.57	1.74	1.93	2.13	2.35	2.59	2.85	3.11	3.66	4.22	4.76	5.29	5.79
2.0	1.05	1.18	1.31	1.46	1.62	1.79	1.99	2.20	2.42	2.67	2.92	3.46	4.01	4.56	5.09	5.61
2.2	0.975	1.10	1.22	1.36	1.51	1.68	1.86	2.06	2.27	2.50	2.75	3.27	3.81	4.36	4.90	5.42
2.4	0.912	1.03	1.14	1.27	1.41	1.57	1.74	1.93	2.14	2.36	2.59	3.09	3.62	4.16	4.70	5.23
2.6	0.856	0.963	1.07	1.19	1.33	1.48	1.64	1.82	2.02	2.22	2.45	2.93	3.44	3.97	4.50	5.03
2.8	0.806	0.906	1.01	1.12	1.25	1.39	1.55	1.72	1.90	2.10	2.32	2.78	3.28	3.79	4.30	4.83
3.0	0.762	0.856	0.954	1.06	1.18	1.32	1.47	1.63	1.80	2.00	2.20	2.64	3.12	3.61	4.12	4.64
x	0.000	0.005	0.017	0.035	0.057	0.083	0.113	0.144	0.178	0.213	0.250	0.327	0.408	0.492	0.579	0.667
y	0.500	0.455	0.417	0.385	0.357	0.333	0.313	0.294	0.278	0.263	0.250	0.227	0.208	0.192	0.179	0.167

Table 8-10a
Coefficients, C, for Eccentrically Loaded Weld Groups
Angle = 15°

Available strength of a weld group, ϕR_n or R_n/Ω, is determined with
$R_n = CC_1Dl$ ($\phi = 0.75$, $\Omega = 2.00$)

LRFD	ASD
$C_{min} = \dfrac{P_u}{\phi C_1 Dl}$ $D_{min} = \dfrac{P_u}{\phi C C_1 l}$ $l_{min} = \dfrac{P_u}{\phi C C_1 D}$	$C_{min} = \dfrac{\Omega P_a}{C_1 Dl}$ $D_{min} = \dfrac{\Omega P_a}{C C_1 l}$ $l_{min} = \dfrac{\Omega P_a}{C C_1 D}$

where
P = required force, P_u or P_a, kips
D = number of sixteenths-of-an-inch in the fillet weld size
l = characteristic length of weld group, in.
$a = e_x/l$
e_x = horizontal component of eccentricity of P with respect to centroid of weld group, in.
C = coefficient tabulated below
C_1 = electrode strength coefficient from Table 8-3 (1.0 for E70XX electrodes)

Note: Shaded values indicate the value is based on the greatest available strength permitted by AISC *Specification* Sections J2.4, J2.4(a), J2.4(b) and J2.4(c).

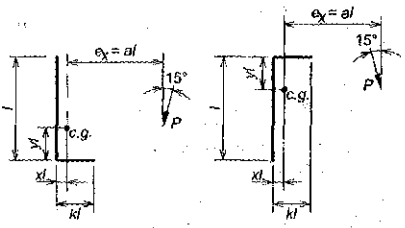

a	k															
	0	0.1	0.2	0.3	0.4	0.5	0.6	0.7	0.8	0.9	1.0	1.2	1.4	1.6	1.8	2.0
0.00	1.98	2.20	2.47	2.74	3.01	3.29	3.56	3.83	4.10	4.38	4.65	5.19	5.74	6.28	6.83	7.37
0.10	1.90	2.08	2.30	2.54	2.97	3.04	3.30	3.57	3.84	4.12	4.41	4.99	5.57	6.15	6.72	7.29
0.15	1.84	2.04	2.25	2.47	2.70	2.94	3.18	3.43	3.68	3.94	4.19	4.72	5.26	5.82	6.38	6.95
0.20	1.76	1.97	2.17	2.38	2.59	2.82	3.04	3.28	3.52	3.76	4.00	4.51	5.02	5.55	6.08	6.63
0.25	1.65	1.86	2.07	2.26	2.46	2.67	2.89	3.11	3.33	3.57	3.80	4.29	4.79	5.30	5.82	6.35
0.30	1.55	1.74	1.95	2.13	2.32	2.52	2.72	2.93	3.15	3.37	3.60	4.07	4.56	5.06	5.57	6.09
0.40	1.34	1.51	1.70	1.87	2.04	2.22	2.40	2.59	2.79	3.00	3.21	3.66	4.12	4.61	5.10	5.61
0.50	1.16	1.31	1.47	1.63	1.79	1.95	2.12	2.29	2.47	2.67	2.87	3.29	3.74	4.20	4.69	5.18
0.60	1.01	1.15	1.29	1.42	1.57	1.72	1.88	2.04	2.21	2.38	2.57	2.97	3.40	3.85	4.32	4.80
0.70	0.895	1.01	1.13	1.25	1.39	1.53	1.68	1.82	1.98	2.15	2.32	2.70	3.11	3.54	3.99	4.46
0.80	0.799	0.906	1.01	1.12	1.24	1.37	1.51	1.65	1.79	1.95	2.11	2.47	2.86	3.27	3.71	4.16
0.90	0.720	0.816	0.909	1.01	1.12	1.24	1.37	1.50	1.63	1.78	1.94	2.27	2.64	3.04	3.45	3.89
1.0	0.654	0.742	0.825	0.915	1.01	1.12	1.25	1.37	1.50	1.64	1.78	2.10	2.45	2.83	3.22	3.64
1.2	0.552	0.626	0.695	0.771	0.856	0.950	1.06	1.17	1.29	1.41	1.54	1.82	2.13	2.47	2.84	3.22
1.4	0.477	0.540	0.600	0.665	0.739	0.822	0.916	1.02	1.12	1.23	1.35	1.60	1.88	2.19	2.52	2.87
1.6	0.420	0.474	0.527	0.585	0.650	0.724	0.808	0.901	0.995	1.09	1.20	1.43	1.68	1.96	2.27	2.59
1.8	0.374	0.422	0.469	0.521	0.580	0.646	0.722	0.806	0.892	0.981	1.08	1.28	1.52	1.78	2.05	2.35
2.0	0.338	0.381	0.423	0.470	0.523	0.584	0.653	0.729	0.809	0.889	0.976	1.17	1.38	1.62	1.88	2.16
2.2	0.308	0.346	0.385	0.428	0.476	0.532	0.595	0.665	0.739	0.813	0.893	1.07	1.27	1.49	1.73	1.99
2.4	0.282	0.318	0.353	0.393	0.437	0.489	0.547	0.612	0.680	0.749	0.822	0.986	1.17	1.37	1.60	1.84
2.6	0.261	0.294	0.326	0.363	0.404	0.452	0.506	0.566	0.630	0.694	0.762	0.914	1.09	1.28	1.49	1.71
2.8	0.242	0.273	0.303	0.337	0.376	0.420	0.470	0.526	0.586	0.646	0.710	0.852	1.01	1.19	1.39	1.60
3.0	0.226	0.255	0.283	0.315	0.351	0.392	0.439	0.492	0.549	0.604	0.664	0.798	0.949	1.12	1.30	1.50
x	0.000	0.005	0.017	0.035	0.057	0.083	0.113	0.144	0.178	0.213	0.250	0.327	0.408	0.492	0.579	0.667
y	0.500	0.455	0.417	0.385	0.357	0.333	0.313	0.294	0.278	0.263	0.250	0.227	0.208	0.192	0.179	0.167

Table 8-10a (continued)
Coefficients, C, for Eccentrically Loaded Weld Groups
Angle = 30°

Available strength of a weld group, ϕR_n or R_n/Ω, is determined with
$R_n = CC_1Dl$ ($\phi = 0.75$, $\Omega = 2.00$)

LRFD	ASD
$C_{min} = \frac{P_u}{\phi C_1 Dl}$ $D_{min} = \frac{P_u}{\phi C C_1 l}$ $l_{min} = \frac{P_u}{\phi C C_1 D}$	$C_{min} = \frac{\Omega P_a}{C_1 Dl}$ $D_{min} = \frac{\Omega P_a}{C C_1 l}$ $l_{min} = \frac{\Omega P_a}{C C_1 D}$

where
P = required force, P_u or P_a, kips
D = number of sixteenths-of-an-inch in the fillet weld size
l = characteristic length of weld group, in.
a = e_x/l
e_x = horizontal component of eccentricity of P with respect to centroid of weld group, in.
C = coefficient tabulated below
C_1 = electrode strength coefficient from Table 8-3 (1.0 for E70XX electrodes)

Note: Shaded values indicate the value is based on the greatest available strength permitted by AISC *Specification Sections J2.4, J2.4(a), J2.4(b) and J2.4(c).*

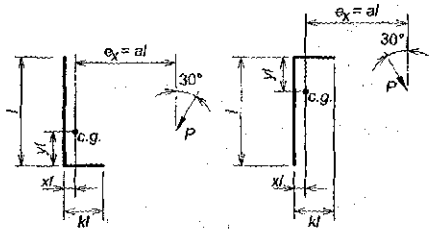

a	k															
	0	0.1	0.2	0.3	0.4	0.5	0.6	0.7	0.8	0.9	1.0	1.2	1.4	1.6	1.8	2.0
0.00	2.18	2.44	2.70	2.96	3.21	3.47	3.73	3.98	4.24	4.50	4.76	5.27	5.78	6.30	6.81	7.33
0.10	2.02	2.24	2.47	2.70	2.94	3.18	3.43	3.69	3.95	4.21	4.48	5.01	5.56	6.11	6.65	7.20
0.15	1.92	2.13	2.34	2.55	2.77	3.00	3.23	3.47	3.71	3.96	4.21	4.73	5.27	5.82	6.37	6.93
0.20	1.82	2.02	2.23	2.43	2.64	2.85	3.07	3.29	3.52	3.76	4.00	4.50	5.01	5.55	6.09	6.64
0.25	1.71	1.91	2.11	2.31	2.50	2.70	2.91	3.12	3.34	3.57	3.80	4.26	4.78	5.30	5.83	6.37
0.30	1.61	1.79	1.98	2.18	2.37	2.56	2.75	2.96	3.17	3.39	3.61	4.08	4.57	5.08	5.60	6.13
0.40	1.41	1.57	1.74	1.92	2.10	2.28	2.45	2.64	2.84	3.04	3.26	3.71	4.18	4.67	5.18	5.69
0.50	1.23	1.38	1.53	1.70	1.87	2.03	2.19	2.36	2.55	2.74	2.94	3.37	3.83	4.30	4.80	5.30
0.60	1.08	1.22	1.36	1.51	1.66	1.81	1.96	2.13	2.30	2.48	2.67	3.08	3.52	3.98	4.46	4.95
0.70	0.964	1.08	1.21	1.35	1.49	1.63	1.77	1.92	2.08	2.26	2.44	2.83	3.25	3.69	4.15	4.64
0.80	0.865	0.974	1.09	1.22	1.34	1.48	1.61	1.75	1.90	2.06	2.23	2.60	3.01	3.44	3.89	4.35
0.90	0.783	0.882	0.989	1.10	1.22	1.34	1.47	1.60	1.74	1.90	2.06	2.41	2.80	3.21	3.64	4.09
1.0	0.714	0.805	0.904	1.01	1.11	1.23	1.35	1.48	1.61	1.75	1.91	2.24	2.61	3.00	3.42	3.86
1.2	0.606	0.684	0.769	0.852	0.944	1.05	1.16	1.27	1.39	1.52	1.66	1.96	2.29	2.65	3.04	3.44
1.4	0.525	0.593	0.665	0.737	0.818	0.908	1.01	1.11	1.22	1.34	1.46	1.73	2.04	2.37	2.72	3.09
1.6	0.463	0.523	0.585	0.649	0.720	0.801	0.892	0.990	1.09	1.19	1.30	1.55	1.83	2.13	2.46	2.80
1.8	0.414	0.468	0.522	0.579	0.644	0.717	0.799	0.890	0.978	1.07	1.18	1.40	1.66	1.93	2.23	2.56
2.0	0.374	0.423	0.471	0.523	0.581	0.648	0.724	0.807	0.889	0.977	1.07	1.28	1.51	1.77	2.05	2.35
2.2	0.341	0.386	0.429	0.476	0.530	0.591	0.661	0.738	0.814	0.895	0.982	1.17	1.39	1.63	1.89	2.17
2.4	0.313	0.354	0.394	0.437	0.487	0.543	0.608	0.679	0.750	0.825	0.906	1.08	1.29	1.51	1.75	2.02
2.6	0.289	0.327	0.364	0.404	0.450	0.503	0.562	0.628	0.696	0.766	0.841	1.01	1.20	1.40	1.63	1.88
2.8	0.269	0.304	0.338	0.376	0.418	0.467	0.523	0.585	0.648	0.714	0.784	0.940	1.12	1.31	1.53	1.76
3.0	0.251	0.284	0.316	0.351	0.391	0.437	0.489	0.547	0.607	0.668	0.734	0.881	1.05	1.23	1.44	1.66
x	0.000	0.005	0.017	0.035	0.057	0.083	0.113	0.144	0.178	0.213	0.250	0.327	0.408	0.492	0.579	0.667
y	0.500	0.455	0.417	0.385	0.357	0.333	0.313	0.294	0.278	0.263	0.250	0.227	0.208	0.192	0.179	0.167

Table 8-10a (continued)
Coefficients, C, for Eccentrically Loaded Weld Groups
Angle = 45°

Available strength of a weld group, ϕR_n or R_n/Ω, is determined with
$R_n = CC_1Dl$ ($\phi = 0.75$, $\Omega = 2.00$)

LRFD	ASD
$C_{min} = \dfrac{P_u}{\phi C_1 Dl}$ $D_{min} = \dfrac{P_u}{\phi C C_1 l}$ $l_{min} = \dfrac{P_u}{\phi C C_1 D}$	$C_{min} = \dfrac{\Omega P_a}{C_1 Dl}$ $D_{min} = \dfrac{\Omega P_a}{C C_1 l}$ $l_{min} = \dfrac{\Omega P_a}{C C_1 D}$

where
P = required force, P_u or P_a, kips
D = number of sixteenths-of-an-inch in the fillet weld size
l = characteristic length of weld group, in.
$a = e_x/l$
e_x = horizontal component of eccentricity of P with respect to centroid of weld group, in.
C = coefficient tabulated below
C_1 = electrode strength coefficient from Table 8-3 (1.0 for E70XX electrodes)

Note: Shaded values indicate the value is based on the greatest available strength permitted by AISC *Specification* Sections J2.4, J2.4(a), J2.4(b) and J2.4(c).

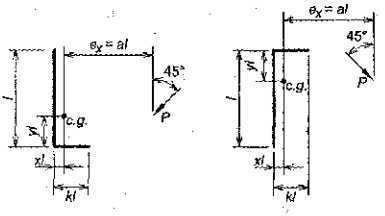

a	k															
	0	0.1	0.2	0.3	0.4	0.5	0.6	0.7	0.8	0.9	1.0	1.2	1.4	1.6	1.8	2.0
0.00	2.41	2.57	2.80	3.04	3.27	3.51	3.74	3.97	4.21	4.44	4.67	5.14	5.61	6.08	6.54	7.01
0.10	2.24	2.44	2.65	2.86	3.07	3.29	3.52	3.76	4.00	4.24	4.49	5.01	5.53	6.06	6.59	7.12
0.15	2.09	2.28	2.48	2.68	2.89	3.11	3.33	3.56	3.79	4.03	4.28	4.79	5.32	5.85	6.40	6.94
0.20	1.96	2.14	2.33	2.54	2.74	2.95	3.16	3.38	3.61	3.84	4.08	4.58	5.10	5.64	6.19	6.74
0.25	1.85	2.02	2.21	2.40	2.61	2.81	3.01	3.22	3.44	3.67	3.90	4.39	4.90	5.43	5.98	6.53
0.30	1.74	1.91	2.09	2.28	2.47	2.67	2.87	3.07	3.29	3.51	3.73	4.21	4.72	5.24	5.78	6.33
0.40	1.55	1.70	1.87	2.04	2.23	2.42	2.60	2.80	3.00	3.21	3.43	3.89	4.38	4.89	5.41	5.95
0.50	1.38	1.52	1.67	1.84	2.01	2.19	2.36	2.55	2.74	2.94	3.15	3.60	4.07	4.57	5.09	5.62
0.60	1.23	1.36	1.50	1.66	1.82	1.99	2.16	2.33	2.51	2.70	2.90	3.33	3.80	4.28	4.79	5.31
0.70	1.11	1.23	1.36	1.50	1.66	1.82	1.97	2.13	2.31	2.49	2.68	3.10	3.55	4.02	4.52	5.03
0.80	1.00	1.12	1.24	1.37	1.52	1.67	1.81	1.97	2.13	2.31	2.49	2.89	3.33	3.79	4.27	4.77
0.90	0.915	1.02	1.13	1.26	1.39	1.54	1.67	1.82	1.98	2.14	2.32	2.71	3.12	3.57	4.04	4.53
1.0	0.839	0.938	1.04	1.16	1.29	1.42	1.55	1.69	1.84	2.00	2.17	2.54	2.94	3.37	3.83	4.30
1.2	0.719	0.805	0.900	1.00	1.12	1.24	1.35	1.48	1.61	1.76	1.91	2.25	2.62	3.02	3.45	3.90
1.4	0.627	0.704	0.788	0.880	0.979	1.08	1.19	1.31	1.43	1.56	1.70	2.01	2.36	2.73	3.13	3.54
1.6	0.555	0.624	0.700	0.783	0.868	0.962	1.07	1.17	1.28	1.40	1.53	1.82	2.14	2.48	2.85	3.24
1.8	0.498	0.560	0.629	0.701	0.778	0.864	0.961	1.06	1.16	1.27	1.39	1.66	1.95	2.27	2.61	2.98
2.0	0.451	0.508	0.571	0.635	0.704	0.784	0.873	0.964	1.06	1.16	1.27	1.52	1.79	2.09	2.41	2.75
2.2	0.412	0.464	0.522	0.579	0.643	0.716	0.799	0.885	0.974	1.07	1.17	1.40	1.65	1.93	2.23	2.55
2.4	0.379	0.428	0.480	0.532	0.592	0.660	0.736	0.818	0.900	0.989	1.08	1.30	1.53	1.79	2.08	2.38
2.6	0.351	0.396	0.444	0.493	0.548	0.611	0.683	0.760	0.837	0.920	1.01	1.21	1.43	1.67	1.94	2.23
2.8	0.327	0.369	0.413	0.458	0.510	0.569	0.636	0.709	0.781	0.859	0.943	1.13	1.34	1.57	1.82	2.10
3.0	0.306	0.345	0.386	0.428	0.477	0.532	0.595	0.665	0.733	0.806	0.885	1.06	1.26	1.48	1.72	1.98
x	0.000	0.005	0.017	0.035	0.057	0.083	0.113	0.144	0.178	0.213	0.250	0.327	0.408	0.492	0.579	0.667
y	0.500	0.455	0.417	0.385	0.357	0.333	0.313	0.294	0.278	0.263	0.250	0.227	0.208	0.192	0.179	0.167

Table 8-10a (continued)
Coefficients, C, for Eccentrically Loaded Weld Groups
Angle = 60°

Available strength of a weld group, ϕR_n or R_n/Ω, is determined with
$R_n = CC_1Dl$ ($\phi = 0.75$, $\Omega = 2.00$)

LRFD	ASD
$C_{min} = \frac{P_u}{\phi C_1 Dl}$ $D_{min} = \frac{P_u}{\phi C C_1 l}$ $l_{min} = \frac{P_u}{\phi C C_1 D}$	$C_{min} = \frac{\Omega P_a}{C_1 Dl}$ $D_{min} = \frac{\Omega P_a}{C C_1 l}$ $l_{min} = \frac{\Omega P_a}{C C_1 D}$

where
P = required force, P_u or P_a, kips
D = number of sixteenths-of-an-inch in the fillet weld size
l = characteristic length of weld group, in.
$a = e_x/l$
e_x = horizontal component of eccentricity of P with respect to centroid of weld group, in.
C = coefficient tabulated below
C_1 = electrode strength coefficient from Table 8-3 (1.0 for E70XX electrodes)

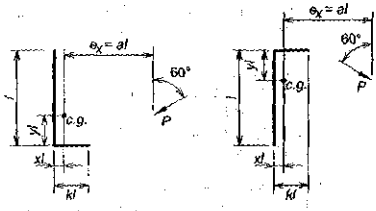

Note: Shaded values indicate the value is based on the greatest available strength permitted by AISC *Specification* Sections J2.4, J2.4(a), J2.4(b) and J2.4(c).

a	k															
	0	0.1	0.2	0.3	0.4	0.5	0.6	0.7	0.8	0.9	1.0	1.2	1.4	1.6	1.8	2.0
0.00	2.60	2.79	3.01	3.23	3.44	3.66	3.88	4.10	4.32	4.54	4.76	5.19	5.63	6.07	6.50	6.94
0.10	2.43	2.59	2.76	2.94	3.14	3.35	3.57	3.80	4.03	4.28	4.52	5.04	5.56	6.07	6.56	7.03
0.15	2.31	2.45	2.62	2.80	3.00	3.21	3.43	3.66	3.89	4.13	4.38	4.89	5.43	5.96	6.48	6.97
0.20	2.18	2.32	2.49	2.67	2.87	3.08	3.30	3.52	3.75	3.99	4.23	4.75	5.28	5.83	6.37	6.88
0.25	2.07	2.21	2.38	2.56	2.75	2.96	3.17	3.40	3.62	3.86	4.10	4.60	5.14	5.69	6.24	6.78
0.30	1.97	2.11	2.27	2.45	2.64	2.84	3.06	3.28	3.50	3.73	3.97	4.47	5.00	5.55	6.11	6.66
0.40	1.79	1.93	2.08	2.25	2.44	2.64	2.84	3.06	3.27	3.50	3.73	4.22	4.74	5.28	5.84	6.41
0.50	1.63	1.76	1.91	2.08	2.26	2.45	2.65	2.86	3.06	3.28	3.51	3.99	4.50	5.03	5.58	6.15
0.60	1.49	1.62	1.76	1.92	2.09	2.28	2.47	2.67	2.87	3.08	3.30	3.77	4.28	4.80	5.35	5.91
0.70	1.37	1.49	1.63	1.78	1.95	2.12	2.31	2.50	2.70	2.90	3.12	3.58	4.07	4.59	5.13	5.68
0.80	1.26	1.38	1.51	1.66	1.82	1.99	2.17	2.35	2.54	2.74	2.95	3.39	3.88	4.39	4.92	5.46
0.90	1.17	1.28	1.41	1.55	1.70	1.86	2.04	2.21	2.39	2.58	2.79	3.23	3.70	4.20	4.72	5.25
1.0	1.08	1.19	1.31	1.45	1.59	1.75	1.92	2.08	2.26	2.45	2.64	3.07	3.53	4.02	4.53	5.05
1.2	0.946	1.05	1.16	1.28	1.41	1.56	1.71	1.87	2.03	2.20	2.39	2.79	3.22	3.69	4.17	4.68
1.4	0.837	0.928	1.03	1.14	1.27	1.40	1.54	1.68	1.83	2.00	2.17	2.54	2.96	3.40	3.86	4.34
1.6	0.748	0.832	0.926	1.03	1.14	1.27	1.40	1.53	1.67	1.82	1.98	2.33	2.72	3.14	3.58	4.04
1.8	0.676	0.754	0.840	0.936	1.04	1.16	1.28	1.40	1.53	1.67	1.82	2.15	2.52	2.91	3.33	3.77
2.0	0.616	0.688	0.768	0.857	0.957	1.07	1.17	1.29	1.41	1.54	1.68	1.99	2.34	2.71	3.11	3.53
2.2	0.565	0.632	0.707	0.790	0.883	0.981	1.08	1.19	1.30	1.43	1.56	1.85	2.18	2.53	2.91	3.31
2.4	0.522	0.585	0.655	0.733	0.818	0.909	1.01	1.11	1.21	1.33	1.46	1.73	2.04	2.37	2.73	3.11
2.6	0.485	0.544	0.609	0.682	0.760	0.845	0.940	1.03	1.13	1.24	1.36	1.62	1.91	2.23	2.57	2.93
2.8	0.453	0.508	0.570	0.638	0.709	0.789	0.879	0.969	1.06	1.17	1.28	1.53	1.80	2.10	2.43	2.78
3.0	0.424	0.476	0.535	0.598	0.665	0.740	0.825	0.911	1.00	1.10	1.21	1.44	1.70	1.99	2.30	2.63
x	0.000	0.005	0.017	0.035	0.057	0.083	0.113	0.144	0.178	0.213	0.250	0.327	0.408	0.492	0.579	0.667
y	0.500	0.455	0.417	0.385	0.357	0.333	0.313	0.294	0.278	0.263	0.250	0.227	0.208	0.192	0.179	0.167

Table 8-10a (continued)
Coefficients, C, for Eccentrically Loaded Weld Groups
Angle = 75°

Available strength of a weld group, ϕR_n or R_n/Ω, is determined with
$R_n = CC_1Dl$ ($\phi = 0.75$, $\Omega = 2.00$)

LRFD	ASD
$C_{min} = \dfrac{P_u}{\phi C_1 Dl}$ $D_{min} = \dfrac{P_u}{\phi C C_1 l}$ $l_{min} = \dfrac{P_u}{\phi C C_1 D}$	$C_{min} = \dfrac{\Omega P_a}{C_1 Dl}$ $D_{min} = \dfrac{\Omega P_a}{C C_1 l}$ $l_{min} = \dfrac{\Omega P_a}{C C_1 D}$

where
P = required force, P_u or P_a, kips
D = number of sixteenths-of-an-inch in the fillet weld size
l = characteristic length of weld group, in.
a = e_x/l
e_x = horizontal component of eccentricity of P with respect to centroid of weld group, in.
C = coefficient tabulated below
C_1 = electrode strength coefficient from Table 8-3 (1.0 for E70XX electrodes)

Note: Shaded values indicate the value is based on the greatest available strength permitted by AISC *Specification* Sections J2.4, J2.4(a), J2.4(b) and J2.4(c).

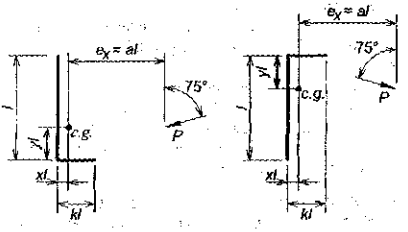

a	k															
	0	0.1	0.2	0.3	0.4	0.5	0.6	0.7	0.8	0.9	1.0	1.2	1.4	1.6	1.8	2.0
0.00	2.74	2.92	3.11	3.30	3.49	3.69	3.88	4.07	4.26	4.46	4.65	5.03	5.42	5.80	6.19	6.57
0.10	2.59	2.68	2.81	2.97	3.16	3.36	3.58	3.82	4.07	4.33	4.58	5.06	5.50	5.91	6.31	6.69
0.15	2.50	2.60	2.74	2.90	3.08	3.29	3.51	3.75	4.00	4.26	4.52	5.02	5.48	5.90	6.30	6.69
0.20	2.43	2.53	2.66	2.83	3.01	3.22	3.44	3.68	3.93	4.19	4.46	4.98	5.45	5.88	6.29	6.69
0.25	2.35	2.46	2.60	2.76	2.94	3.15	3.37	3.61	3.86	4.12	4.39	4.92	5.42	5.86	6.28	6.68
0.30	2.28	2.39	2.53	2.69	2.88	3.09	3.31	3.54	3.79	4.05	4.32	4.86	5.37	5.84	6.26	6.67
0.40	2.16	2.27	2.41	2.57	2.76	2.96	3.18	3.42	3.66	3.92	4.19	4.72	5.27	5.77	6.22	6.64
0.50	2.05	2.16	2.30	2.46	2.64	2.85	3.06	3.30	3.54	3.80	4.06	4.59	5.13	5.66	6.15	6.59
0.60	1.94	2.05	2.19	2.35	2.54	2.73	2.95	3.18	3.42	3.68	3.93	4.46	5.00	5.54	6.06	6.54
0.70	1.85	1.96	2.10	2.25	2.43	2.63	2.84	3.07	3.31	3.56	3.81	4.33	4.87	5.42	5.95	6.45
0.80	1.75	1.87	2.00	2.16	2.34	2.53	2.74	2.97	3.20	3.45	3.69	4.21	4.75	5.30	5.84	6.35
0.90	1.67	1.78	1.92	2.07	2.25	2.44	2.65	2.87	3.10	3.34	3.58	4.09	4.62	5.17	5.72	6.24
1.0	1.59	1.70	1.84	1.99	2.16	2.35	2.55	2.77	3.00	3.24	3.47	3.97	4.50	5.05	5.60	6.13
1.2	1.45	1.56	1.69	1.84	2.00	2.18	2.38	2.60	2.82	3.04	3.27	3.76	4.27	4.81	5.37	5.91
1.4	1.33	1.43	1.56	1.70	1.86	2.04	2.23	2.44	2.65	2.86	3.08	3.55	4.06	4.59	5.13	5.68
1.6	1.22	1.32	1.45	1.58	1.74	1.91	2.09	2.29	2.49	2.69	2.91	3.37	3.86	4.37	4.91	5.46
1.8	1.13	1.23	1.35	1.48	1.63	1.79	1.97	2.16	2.34	2.54	2.75	3.19	3.67	4.17	4.70	5.24
2.0	1.05	1.14	1.26	1.38	1.52	1.68	1.85	2.03	2.21	2.40	2.60	3.03	3.50	3.99	4.50	5.03
2.2	0.975	1.07	1.18	1.30	1.44	1.59	1.75	1.92	2.09	2.27	2.47	2.88	3.33	3.81	4.31	4.83
2.4	0.912	1.00	1.11	1.22	1.35	1.50	1.66	1.82	1.98	2.16	2.34	2.74	3.18	3.64	4.13	4.64
2.6	0.856	0.943	1.04	1.15	1.28	1.42	1.57	1.72	1.88	2.05	2.23	2.62	3.04	3.49	3.96	4.46
2.8	0.806	0.890	0.986	1.09	1.21	1.35	1.49	1.64	1.79	1.95	2.12	2.50	2.91	3.35	3.81	4.29
3.0	0.762	0.842	0.934	1.04	1.15	1.28	1.42	1.56	1.70	1.86	2.03	2.39	2.78	3.21	3.66	4.13
x	0.000	0.005	0.017	0.035	0.057	0.083	0.113	0.144	0.178	0.213	0.250	0.327	0.408	0.492	0.579	0.667
y	0.500	0.455	0.417	0.385	0.357	0.333	0.313	0.294	0.278	0.263	0.250	0.227	0.208	0.192	0.179	0.167

Table 8-11
Coefficients, *C*, for Eccentrically Loaded Weld Groups
Angle = 0°

Available strength of a weld group, ϕR_n or R_n/Ω, is determined with
$R_n = CC_1Dl$ ($\phi = 0.75$, $\Omega = 2.00$)

LRFD	ASD
$C_{min} = \frac{P_u}{\phi C_1 Dl}$ $D_{min} = \frac{P_u}{\phi C C_1 l}$ $l_{min} = \frac{P_u}{\phi C C_1 D}$	$C_{min} = \frac{\Omega P_a}{C_1 Dl}$ $D_{min} = \frac{\Omega P_a}{C C_1 l}$ $l_{min} = \frac{\Omega P_a}{C C_1 D}$

where
P = required force, P_u or P_a, kips
D = number of sixteenths-of-an-inch in the fillet weld size
l = characteristic length of weld group, in.
$a = e_x/l$
e_x = horizontal component of eccentricity of P with respect to centroid of weld group, in.
C = coefficient tabulated below
C_1 = electrode strength coefficient from Table 8-3 (1.0 for E70XX electrodes)

Note: Shaded values indicate the value is based on the greatest available strength permitted by AISC *Specification* Sections J2.4, J2.4(a), J2.4(b) and J2.4(c).

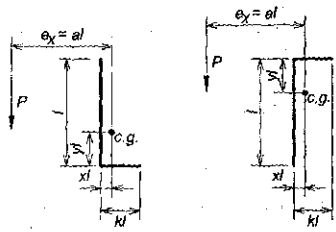

a	k															
	0	0.1	0.2	0.3	0.4	0.5	0.6	0.7	0.8	0.9	1.0	1.2	1.4	1.6	1.8	2.0
0.00	1.86	2.04	2.23	2.41	2.60	2.97	3.25	3.53	3.80	4.08	4.36	4.92	5.47	6.03	6.59	7.15
0.10	1.86	2.06	2.32	2.57	2.83	3.08	3.32	3.55	3.77	3.98	4.19	4.60	5.02	5.45	5.89	6.35
0.15	1.83	2.04	2.27	2.51	2.74	2.97	3.18	3.39	3.58	3.78	3.97	4.37	4.79	5.22	5.66	6.11
0.20	1.76	1.96	2.17	2.38	2.59	2.78	2.98	3.17	3.36	3.56	3.76	4.16	4.57	5.00	5.44	5.89
0.25	1.66	1.85	2.03	2.22	2.40	2.58	2.76	2.95	3.14	3.34	3.55	3.95	4.36	4.78	5.22	5.67
0.30	1.55	1.72	1.89	2.06	2.22	2.39	2.56	2.74	2.94	3.14	3.35	3.76	4.16	4.58	5.02	5.46
0.40	1.33	1.48	1.63	1.76	1.90	2.05	2.22	2.40	2.59	2.78	2.99	3.40	3.80	4.21	4.64	5.08
0.50	1.15	1.28	1.40	1.52	1.65	1.79	1.94	2.11	2.29	2.48	2.68	3.08	3.48	3.88	4.30	4.73
0.60	0.999	1.11	1.22	1.33	1.45	1.58	1.72	1.88	2.05	2.23	2.41	2.81	3.20	3.59	3.99	4.41
0.70	0.879	0.979	1.08	1.18	1.29	1.41	1.54	1.69	1.85	2.01	2.19	2.56	2.95	3.33	3.72	4.12
0.80	0.783	0.871	0.960	1.06	1.16	1.27	1.39	1.53	1.67	1.83	2.00	2.35	2.73	3.10	3.48	3.87
0.90	0.704	0.783	0.865	0.954	1.05	1.15	1.27	1.39	1.53	1.68	1.84	2.17	2.53	2.89	3.26	3.63
1.0	0.639	0.711	0.786	0.869	0.959	1.06	1.16	1.28	1.41	1.55	1.69	2.01	2.36	2.71	3.06	3.42
1.2	0.538	0.599	0.664	0.735	0.814	0.900	0.993	1.09	1.21	1.33	1.46	1.75	2.07	2.40	2.72	3.06
1.4	0.464	0.517	0.574	0.636	0.706	0.782	0.865	0.956	1.06	1.17	1.28	1.54	1.83	2.14	2.44	2.76
1.6	0.408	0.454	0.505	0.560	0.622	0.691	0.766	0.847	0.937	1.04	1.14	1.38	1.64	1.92	2.21	2.51
1.8	0.363	0.405	0.450	0.500	0.556	0.618	0.686	0.760	0.841	0.931	1.03	1.24	1.48	1.75	2.02	2.29
2.0	0.328	0.365	0.406	0.451	0.502	0.559	0.621	0.689	0.763	0.845	0.935	1.13	1.35	1.60	1.85	2.11
2.2	0.298	0.333	0.370	0.411	0.458	0.510	0.567	0.630	0.698	0.773	0.856	1.04	1.24	1.47	1.71	1.95
2.4	0.274	0.305	0.340	0.378	0.421	0.469	0.522	0.580	0.643	0.713	0.789	0.959	1.15	1.36	1.58	1.82
2.6	0.253	0.282	0.314	0.349	0.389	0.434	0.483	0.537	0.596	0.661	0.731	0.890	1.07	1.26	1.47	1.69
2.8	0.235	0.262	0.292	0.324	0.362	0.403	0.450	0.500	0.555	0.615	0.682	0.830	0.997	1.18	1.37	1.58
3.0	0.219	0.245	0.272	0.303	0.338	0.377	0.420	0.468	0.519	0.576	0.638	0.777	0.934	1.10	1.28	1.48
x	0.000	0.005	0.017	0.035	0.057	0.083	0.113	0.144	0.178	0.213	0.250	0.327	0.408	0.492	0.579	0.667
y	0.500	0.455	0.417	0.385	0.357	0.333	0.313	0.294	0.278	0.263	0.250	0.227	0.208	0.192	0.179	0.167

Table 8-11 (continued)
Coefficients, C, for Eccentrically Loaded Weld Groups
Angle = 15°

Available strength of a weld group, ϕR_n or R_n/Ω, is determined with
$R_n = CC_1Dl$ ($\phi = 0.75$, $\Omega = 2.00$)

LRFD	ASD
$C_{min} = \dfrac{P_u}{\phi C_1 Dl}$ $D_{min} = \dfrac{P_u}{\phi C C_1 l}$ $l_{min} = \dfrac{P_u}{\phi C C_1 D}$	$C_{min} = \dfrac{\Omega P_a}{C_1 Dl}$ $D_{min} = \dfrac{\Omega P_a}{C C_1 l}$ $l_{min} = \dfrac{\Omega P_a}{C C_1 D}$

where
P = required force, P_u or P_a, kips
D = number of sixteenths-of-an-inch in the fillet weld size
l = characteristic length of weld group, in.
$a = e_x/l$
e_x = horizontal component of eccentricity of P with respect to centroid of weld group, in.
C = coefficient tabulated below
C_1 = electrode strength coefficient from Table 8-3 (1.0 for E70XX electrodes)

Note: Shaded values indicate the value is based on the greatest available strength permitted by AISC *Specification* Sections J2.4, J2.4(a), J2.4(b) and J2.4(c).

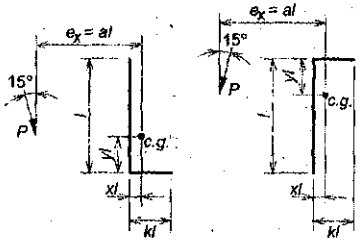

a	k															
	0	0.1	0.2	0.3	0.4	0.5	0.6	0.7	0.8	0.9	1.0	1.2	1.4	1.6	1.8	2.0
0.00	1.98	2.20	2.47	2.74	3.01	3.29	3.56	3.83	4.10	4.38	4.65	5.19	5.74	6.28	6.83	7.37
0.10	1.90	2.09	2.32	2.55	2.79	3.02	3.26	3.49	3.71	3.94	4.16	4.60	5.04	5.49	5.95	6.42
0.15	1.84	2.05	2.26	2.48	2.70	2.92	3.13	3.35	3.56	3.77	3.98	4.40	4.83	5.27	5.72	6.18
0.20	1.76	1.96	2.17	2.38	2.58	2.78	2.99	3.19	3.38	3.58	3.78	4.19	4.61	5.05	5.49	5.95
0.25	1.65	1.85	2.05	2.25	2.44	2.63	2.82	3.01	3.20	3.39	3.58	3.99	4.41	4.84	5.28	5.74
0.30	1.55	1.74	1.92	2.10	2.28	2.46	2.64	2.82	3.01	3.21	3.40	3.81	4.22	4.65	5.09	5.54
0.40	1.34	1.51	1.67	1.82	1.97	2.12	2.29	2.48	2.67	2.87	3.08	3.47	3.88	4.29	4.73	5.17
0.50	1.16	1.31	1.44	1.58	1.71	1.86	2.02	2.19	2.37	2.56	2.77	3.17	3.57	3.97	4.39	4.83
0.60	1.01	1.14	1.26	1.38	1.51	1.65	1.79	1.95	2.12	2.31	2.50	2.91	3.29	3.69	4.09	4.51
0.70	0.895	1.01	1.12	1.23	1.34	1.47	1.61	1.75	1.91	2.09	2.27	2.66	3.04	3.43	3.82	4.23
0.80	0.799	0.897	0.995	1.10	1.21	1.32	1.45	1.59	1.74	1.90	2.07	2.44	2.83	3.19	3.58	3.97
0.90	0.720	0.809	0.897	0.991	1.09	1.20	1.32	1.45	1.59	1.74	1.90	2.26	2.63	2.99	3.36	3.74
1.0	0.654	0.735	0.816	0.902	0.996	1.10	1.21	1.33	1.46	1.60	1.76	2.09	2.45	2.80	3.16	3.53
1.2	0.552	0.621	0.689	0.763	0.845	0.936	1.03	1.14	1.25	1.38	1.52	1.82	2.15	2.48	2.81	3.16
1.4	0.477	0.536	0.595	0.660	0.733	0.813	0.900	0.994	1.10	1.21	1.33	1.60	1.90	2.22	2.53	2.85
1.6	0.420	0.471	0.523	0.581	0.646	0.718	0.796	0.881	0.974	1.08	1.19	1.43	1.70	2.00	2.29	2.59
1.8	0.374	0.420	0.467	0.519	0.577	0.642	0.713	0.790	0.874	0.967	1.07	1.29	1.54	1.81	2.09	2.37
2.0	0.338	0.379	0.421	0.468	0.521	0.580	0.645	0.716	0.793	0.877	0.969	1.18	1.41	1.66	1.92	2.19
2.2	0.308	0.345	0.384	0.426	0.475	0.529	0.589	0.654	0.725	0.803	0.888	1.08	1.29	1.52	1.77	2.02
2.4	0.282	0.317	0.352	0.391	0.436	0.486	0.542	0.602	0.668	0.739	0.818	0.994	1.19	1.41	1.64	1.88
2.6	0.261	0.292	0.325	0.362	0.403	0.450	0.501	0.557	0.619	0.685	0.758	0.923	1.11	1.31	1.52	1.75
2.8	0.242	0.272	0.302	0.336	0.375	0.418	0.466	0.519	0.576	0.638	0.707	0.860	1.03	1.22	1.42	1.64
3.0	0.226	0.254	0.282	0.314	0.350	0.391	0.436	0.485	0.539	0.598	0.662	0.806	0.967	1.14	1.33	1.53
x	0.000	0.005	0.017	0.035	0.057	0.083	0.113	0.144	0.178	0.213	0.250	0.327	0.408	0.492	0.579	0.667
y	0.500	0.455	0.417	0.385	0.357	0.333	0.313	0.294	0.278	0.263	0.250	0.227	0.208	0.192	0.179	0.167

Table 8-11 (continued)
Coefficients, C, for Eccentrically Loaded Weld Groups
Angle = 30°

Available strength of a weld group, ϕR_n or R_n/Ω, is determined with
$R_n = CC_1Dl$ ($\phi = 0.75$, $\Omega = 2.00$)

LRFD	ASD
$C_{min} = \dfrac{P_u}{\phi C_1 Dl}$ $D_{min} = \dfrac{P_u}{\phi CC_1 l}$ $l_{min} = \dfrac{P_u}{\phi CC_1 D}$	$C_{min} = \dfrac{\Omega P_a}{C_1 Dl}$ $D_{min} = \dfrac{\Omega P_a}{CC_1 l}$ $l_{min} = \dfrac{\Omega P_a}{CC_1 D}$

where
P = required force, P_u or P_a, kips
D = number of sixteenths-of-an-inch in the fillet weld size
l = characteristic length of weld group, in.
$a = e_x/l$
e_x = horizontal component of eccentricity of P with respect to centroid of weld group, in.
C = coefficient tabulated below
C_1 = electrode strength coefficient from Table 8-3 (1.0 for E70XX electrodes)

Note: Shaded values indicate the value is based on the greatest available strength permitted by AISC *Specification* Sections J2.4, J2.4(a), J2.4(b) and J2.4(c).

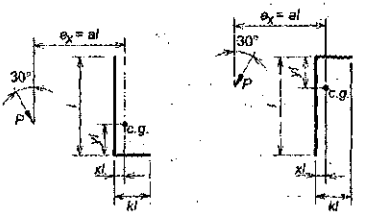

a	k															
	0	0.1	0.2	0.3	0.4	0.5	0.6	0.7	0.8	0.9	1.0	1.2	1.4	1.6	1.8	2.0
0.00	2.18	2.44	2.70	2.96	3.21	3.47	3.73	3.98	4.24	4.50	4.76	5.27	5.78	6.30	6.81	7.33
0.10	2.02	2.24	2.47	2.70	2.93	3.17	3.40	3.63	3.87	4.10	4.34	4.82	5.31	5.80	6.30	6.81
0.15	1.92	2.12	2.33	2.54	2.76	2.98	3.20	3.42	3.64	3.86	4.09	4.55	5.02	5.51	6.01	6.53
0.20	1.82	2.01	2.21	2.41	2.62	2.83	3.03	3.24	3.46	3.67	3.89	4.33	4.79	5.26	5.74	6.24
0.25	1.71	1.90	2.08	2.28	2.47	2.67	2.88	3.08	3.28	3.49	3.70	4.13	4.57	5.03	5.50	5.99
0.30	1.61	1.78	1.96	2.14	2.32	2.52	2.72	2.91	3.11	3.31	3.51	3.93	4.37	4.82	5.29	5.76
0.40	1.41	1.56	1.72	1.87	2.05	2.24	2.43	2.63	2.82	3.01	3.21	3.62	4.04	4.48	4.93	5.39
0.50	1.23	1.37	1.50	1.66	1.82	2.00	2.19	2.37	2.56	2.75	2.95	3.34	3.75	4.18	4.62	5.06
0.60	1.08	1.21	1.33	1.48	1.63	1.80	1.96	2.13	2.31	2.51	2.71	3.10	3.50	3.91	4.33	4.77
0.70	0.964	1.07	1.19	1.33	1.47	1.62	1.77	1.93	2.10	2.28	2.48	2.87	3.26	3.66	4.08	4.50
0.80	0.865	0.965	1.07	1.20	1.33	1.46	1.60	1.75	1.92	2.09	2.27	2.67	3.05	3.44	3.84	4.25
0.90	0.783	0.874	0.976	1.09	1.21	1.33	1.46	1.60	1.76	1.92	2.10	2.47	2.85	3.23	3.62	4.03
1.0	0.714	0.798	0.893	0.997	1.10	1.22	1.34	1.48	1.62	1.77	1.94	2.30	2.68	3.04	3.42	3.81
1.2	0.606	0.678	0.761	0.847	0.938	1.04	1.15	1.27	1.39	1.53	1.68	2.01	2.37	2.71	3.07	3.44
1.4	0.525	0.589	0.661	0.734	0.815	0.904	1.00	1.11	1.22	1.35	1.48	1.78	2.10	2.44	2.77	3.12
1.6	0.463	0.520	0.582	0.647	0.719	0.799	0.887	0.982	1.09	1.20	1.32	1.59	1.89	2.21	2.52	2.85
1.8	0.414	0.465	0.520	0.577	0.642	0.715	0.795	0.882	0.975	1.08	1.19	1.43	1.71	2.01	2.31	2.61
2.0	0.374	0.421	0.469	0.521	0.580	0.647	0.720	0.799	0.885	0.978	1.08	1.31	1.56	1.84	2.12	2.41
2.2	0.341	0.384	0.427	0.475	0.529	0.590	0.657	0.730	0.809	0.895	0.989	1.20	1.44	1.69	1.96	2.24
2.4	0.313	0.353	0.392	0.436	0.486	0.542	0.604	0.672	0.745	0.825	0.912	1.11	1.32	1.56	1.81	2.08
2.6	0.289	0.326	0.363	0.403	0.450	0.502	0.559	0.622	0.690	0.765	0.845	1.03	1.23	1.45	1.68	1.94
2.8	0.269	0.303	0.337	0.375	0.418	0.467	0.520	0.579	0.643	0.712	0.788	0.958	1.15	1.35	1.57	1.81
3.0	0.251	0.283	0.315	0.350	0.391	0.436	0.487	0.542	0.602	0.667	0.738	0.898	1.07	1.26	1.47	1.70
x	0.000	0.005	0.017	0.035	0.057	0.083	0.113	0.144	0.178	0.213	0.250	0.327	0.408	0.492	0.579	0.667
y	0.500	0.455	0.417	0.385	0.357	0.333	0.313	0.294	0.278	0.263	0.250	0.227	0.208	0.192	0.179	0.167

Table 8-11 (continued)
Coefficients, C, for Eccentrically Loaded Weld Groups
Angle = 45°

Available strength of a weld group, ϕR_n or R_n/Ω, is determined with
$R_n = CC_1Dl$ ($\phi = 0.75$, $\Omega = 2.00$)

LRFD	ASD
$C_{min} = \frac{P_u}{\phi C_1 Dl}$ $D_{min} = \frac{P_u}{\phi C C_1 l}$ $l_{min} = \frac{P_u}{\phi C C_1 D}$	$C_{min} = \frac{\Omega P_a}{C_1 Dl}$ $D_{min} = \frac{\Omega P_a}{C C_1 l}$ $l_{min} = \frac{\Omega P_a}{C C_1 D}$

where
P = required force, P_u or P_a, kips
D = number of sixteenths-of-an-inch in the fillet weld size
l = characteristic length of weld group, in.
$a = e_x/l$
e_x = horizontal component of eccentricity of P with respect to centroid of weld group, in.
C = coefficient tabulated below
C_1 = electrode strength coefficient from Table 8-3 (1.0 for E70XX electrodes)

Note: Shaded values indicate the value is based on the greatest available strength permitted by AISC *Specification* Sections J2.4, J2.4(a), J2.4(b) and J2.4(c).

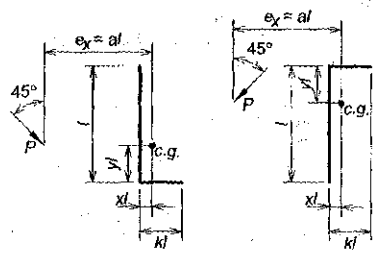

a	k															
	0	0.1	0.2	0.3	0.4	0.5	0.6	0.7	0.8	0.9	1.0	1.2	1.4	1.6	1.8	2.0
0.00	2.41	2.57	2.80	3.04	3.27	3.51	3.74	3.97	4.21	4.44	4.67	5.14	5.61	6.08	6.54	7.01
0.10	2.24	2.44	2.65	2.87	3.09	3.32	3.56	3.79	4.03	4.26	4.50	4.99	5.47	5.96	6.45	6.94
0.15	2.09	2.28	2.48	2.69	2.91	3.14	3.38	3.62	3.85	4.09	4.33	4.83	5.32	5.82	6.31	6.81
0.20	1.96	2.14	2.32	2.51	2.72	2.94	3.17	3.42	3.66	3.90	4.15	4.65	5.15	5.65	6.15	6.65
0.25	1.85	2.02	2.19	2.37	2.56	2.76	2.98	3.21	3.45	3.70	3.95	4.45	4.95	5.46	5.97	6.47
0.30	1.74	1.90	2.06	2.23	2.41	2.61	2.82	3.04	3.26	3.50	3.74	4.24	4.75	5.26	5.77	6.28
0.40	1.55	1.69	1.84	1.99	2.17	2.36	2.56	2.77	2.99	3.22	3.44	3.89	4.36	4.86	5.37	5.88
0.50	1.38	1.51	1.64	1.80	1.97	2.15	2.35	2.56	2.77	2.98	3.20	3.63	4.07	4.54	5.02	5.52
0.60	1.23	1.35	1.48	1.63	1.79	1.97	2.16	2.36	2.57	2.78	2.99	3.41	3.84	4.28	4.74	5.21
0.70	1.11	1.22	1.34	1.48	1.64	1.81	1.99	2.19	2.38	2.59	2.80	3.20	3.62	4.05	4.50	4.95
0.80	1.00	1.11	1.22	1.36	1.51	1.67	1.84	2.03	2.22	2.42	2.62	3.01	3.42	3.84	4.28	4.72
0.90	0.915	1.01	1.12	1.25	1.39	1.54	1.71	1.88	2.07	2.25	2.44	2.84	3.24	3.65	4.07	4.51
1.0	0.839	0.929	1.03	1.15	1.29	1.43	1.59	1.75	1.92	2.10	2.28	2.68	3.07	3.47	3.88	4.31
1.2	0.719	0.799	0.891	0.997	1.12	1.25	1.38	1.52	1.67	1.83	2.00	2.37	2.76	3.14	3.53	3.94
1.4	0.627	0.699	0.782	0.877	0.981	1.09	1.21	1.34	1.47	1.62	1.78	2.11	2.49	2.86	3.23	3.62
1.6	0.555	0.620	0.695	0.781	0.870	0.967	1.07	1.19	1.31	1.45	1.59	1.90	2.24	2.61	2.97	3.34
1.8	0.498	0.557	0.625	0.701	0.780	0.868	0.965	1.07	1.18	1.31	1.44	1.72	2.04	2.38	2.73	3.09
2.0	0.451	0.505	0.568	0.634	0.706	0.786	0.875	0.972	1.08	1.19	1.31	1.57	1.86	2.18	2.53	2.86
2.2	0.412	0.462	0.520	0.579	0.644	0.718	0.800	0.889	0.986	1.09	1.20	1.44	1.72	2.01	2.33	2.67
2.4	0.379	0.426	0.479	0.532	0.593	0.661	0.737	0.819	0.909	1.01	1.11	1.33	1.59	1.87	2.17	2.49
2.6	0.351	0.394	0.443	0.492	0.549	0.612	0.682	0.760	0.843	0.933	1.03	1.24	1.48	1.74	2.02	2.32
2.8	0.327	0.367	0.412	0.458	0.510	0.570	0.635	0.707	0.786	0.870	0.961	1.16	1.38	1.63	1.89	2.18
3.0	0.306	0.344	0.385	0.428	0.477	0.533	0.594	0.662	0.735	0.814	0.900	1.09	1.29	1.53	1.78	2.05
x	0.000	0.005	0.017	0.035	0.057	0.083	0.113	0.144	0.178	0.213	0.250	0.327	0.408	0.492	0.579	0.667
y	0.500	0.455	0.417	0.385	0.357	0.333	0.313	0.294	0.278	0.263	0.250	0.227	0.208	0.192	0.179	0.167

Table 8-11 (continued)
Coefficients, C, for Eccentrically Loaded Weld Groups
Angle = 60°

Available strength of a weld group, ϕR_n or R_n/Ω, is determined with
$R_n = CC_1Dl$ ($\phi = 0.75$, $\Omega = 2.00$)

LRFD	ASD
$C_{min} = \dfrac{P_u}{\phi C_1 Dl}$ $D_{min} = \dfrac{P_u}{\phi C C_1 l}$ $l_{min} = \dfrac{P_u}{\phi C C_1 D}$	$C_{min} = \dfrac{\Omega P_a}{C_1 Dl}$ $D_{min} = \dfrac{\Omega P_a}{C C_1 l}$ $l_{min} = \dfrac{\Omega P_a}{C C_1 D}$

where
P = required force, P_u or P_a, kips
D = number of sixteenths-of-an-inch in the fillet weld size
l = characteristic length of weld group, in.
$a = e_x/l$
e_x = horizontal component of eccentricity of P with respect to centroid of weld group, in.
C = coefficient tabulated below
C_1 = electrode strength coefficient from Table 8-3 (1.0 for E70XX electrodes)

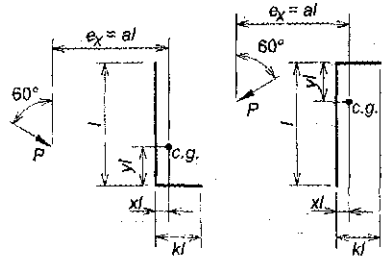

Note: Shaded values indicate the value is based on the greatest available strength permitted by AISC *Specification* Sections J2.4, J2.4(a), J2.4(b) and J2.4(c).

a	k															
	0	0.1	0.2	0.3	0.4	0.5	0.6	0.7	0.8	0.9	1.0	1.2	1.4	1.6	1.8	2.0
0.00	2.60	2.79	3.01	3.23	3.44	3.66	3.88	4.10	4.32	4.54	4.76	5.19	5.63	6.07	6.50	6.94
0.10	2.43	2.59	2.76	2.94	3.14	3.36	3.59	3.83	4.07	4.30	4.54	5.00	5.46	5.92	6.37	6.82
0.15	2.31	2.45	2.61	2.79	2.98	3.20	3.42	3.67	3.91	4.16	4.41	4.89	5.36	5.82	6.28	6.74
0.20	2.18	2.32	2.48	2.64	2.83	3.04	3.27	3.51	3.75	4.00	4.25	4.76	5.24	5.72	6.19	6.65
0.25	2.07	2.21	2.35	2.51	2.70	2.91	3.14	3.38	3.62	3.87	4.11	4.61	5.11	5.60	6.08	6.55
0.30	1.97	2.10	2.24	2.40	2.59	2.79	3.01	3.25	3.50	3.75	3.99	4.48	4.97	5.47	5.96	6.44
0.40	1.79	1.92	2.05	2.21	2.39	2.59	2.81	3.03	3.27	3.52	3.77	4.26	4.75	5.23	5.71	6.20
0.50	1.63	1.75	1.88	2.04	2.22	2.42	2.63	2.85	3.07	3.31	3.55	4.06	4.55	5.04	5.52	5.99
0.60	1.49	1.61	1.74	1.89	2.07	2.26	2.47	2.68	2.90	3.13	3.36	3.85	4.36	4.85	5.34	5.81
0.70	1.37	1.48	1.61	1.76	1.93	2.12	2.32	2.53	2.75	2.97	3.20	3.67	4.16	4.67	5.16	5.64
0.80	1.26	1.37	1.49	1.64	1.81	1.99	2.18	2.39	2.60	2.82	3.04	3.51	3.98	4.48	4.98	5.47
0.90	1.17	1.27	1.39	1.53	1.69	1.87	2.06	2.26	2.46	2.68	2.90	3.35	3.82	4.30	4.79	5.29
1.0	1.08	1.18	1.30	1.44	1.59	1.76	1.94	2.14	2.34	2.55	2.76	3.21	3.67	4.13	4.61	5.11
1.2	0.946	1.04	1.15	1.27	1.41	1.57	1.74	1.92	2.11	2.30	2.49	2.92	3.37	3.83	4.29	4.75
1.4	0.837	0.921	1.02	1.14	1.27	1.41	1.57	1.74	1.90	2.07	2.26	2.66	3.09	3.55	4.00	4.45
1.6	0.748	0.827	0.920	1.03	1.15	1.28	1.43	1.58	1.73	1.89	2.06	2.43	2.84	3.28	3.74	4.17
1.8	0.676	0.749	0.836	0.935	1.05	1.17	1.31	1.44	1.58	1.72	1.88	2.23	2.62	3.04	3.49	3.92
2.0	0.616	0.684	0.765	0.856	0.961	1.08	1.20	1.32	1.45	1.59	1.73	2.06	2.43	2.83	3.25	3.69
2.2	0.565	0.629	0.704	0.790	0.887	0.991	1.10	1.22	1.34	1.47	1.61	1.91	2.26	2.64	3.04	3.46
2.4	0.522	0.582	0.652	0.732	0.822	0.916	1.02	1.13	1.24	1.36	1.49	1.78	2.11	2.47	2.85	3.26
2.6	0.485	0.541	0.607	0.682	0.763	0.851	0.948	1.05	1.16	1.27	1.39	1.67	1.98	2.32	2.68	3.07
2.8	0.453	0.506	0.568	0.638	0.712	0.794	0.885	0.984	1.08	1.19	1.31	1.57	1.86	2.18	2.53	2.90
3.0	0.424	0.475	0.533	0.599	0.667	0.744	0.830	0.923	1.02	1.12	1.23	1.47	1.75	2.06	2.39	2.74
x	0.000	0.005	0.017	0.035	0.057	0.083	0.113	0.144	0.178	0.213	0.250	0.327	0.408	0.492	0.579	0.667
y	0.500	0.455	0.417	0.385	0.357	0.333	0.313	0.294	0.278	0.263	0.250	0.227	0.208	0.192	0.179	0.167

Table 8-11 (continued)
Coefficients, C, for Eccentrically Loaded Weld Groups
Angle = 75°

Available strength of a weld group, ϕR_n or R_n/Ω, is determined with
$R_n = CC_1Dl$ ($\phi = 0.75$, $\Omega = 2.00$)

LRFD			ASD		
$C_{min} = \frac{P_u}{\phi C_1 Dl}$	$D_{min} = \frac{P_u}{\phi C C_1 l}$	$l_{min} = \frac{P_u}{\phi C C_1 D}$	$C_{min} = \frac{\Omega P_a}{C_1 Dl}$	$D_{min} = \frac{\Omega P_a}{C C_1 l}$	$l_{min} = \frac{\Omega P_a}{C C_1 D}$

where
P_u = required force, P_u or P_a, kips
D = number of sixteenths-of-an-inch in the fillet weld size
l = characteristic length of weld group, in.
$a = e_x/l$
e_x = horizontal component of eccentricity of P with respect to centroid of weld group, in.
C = coefficient tabulated below
C_1 = electrode strength coefficient from Table 8-3 (1.0 for E70XX electrodes)

Note: Shaded values indicate the value is based on the greatest available strength permitted by AISC *Specification* Sections J2.4, J2.4(a), J2.4(b) and J2.4(c).

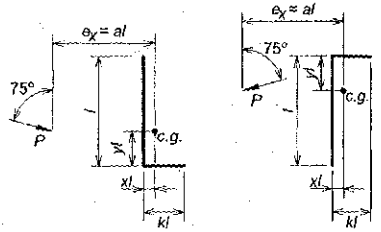

a	k															
	0	0.1	0.2	0.3	0.4	0.5	0.6	0.7	0.8	0.9	1.0	1.2	1.4	1.6	1.8	2.0
0.00	2.74	2.92	3.11	3.30	3.49	3.69	3.88	4.07	4.26	4.46	4.65	5.03	5.42	5.80	6.19	6.57
0.10	2.59	2.67	2.78	2.93	3.12	3.32	3.53	3.75	3.96	4.17	4.38	4.78	5.22	5.64	6.06	6.46
0.15	2.50	2.59	2.70	2.86	3.05	3.26	3.48	3.70	3.92	4.13	4.34	4.74	5.15	5.58	6.01	6.42
0.20	2.43	2.52	2.63	2.79	2.98	3.19	3.42	3.64	3.87	4.09	4.30	4.71	5.11	5.52	5.95	6.37
0.25	2.35	2.44	2.56	2.73	2.92	3.13	3.36	3.59	3.82	4.04	4.26	4.68	5.08	5.48	5.89	6.31
0.30	2.28	2.38	2.50	2.66	2.85	3.07	3.30	3.53	3.77	4.00	4.22	4.65	5.06	5.45	5.85	6.26
0.40	2.16	2.25	2.38	2.55	2.74	2.95	3.17	3.41	3.66	3.90	4.13	4.58	5.00	5.41	5.80	6.19
0.50	2.05	2.14	2.27	2.44	2.63	2.83	3.06	3.30	3.55	3.79	4.04	4.50	4.94	5.35	5.76	6.15
0.60	1.94	2.04	2.17	2.34	2.52	2.73	2.95	3.19	3.43	3.69	3.94	4.42	4.87	5.30	5.71	6.11
0.70	1.85	1.94	2.08	2.24	2.42	2.63	2.85	3.08	3.32	3.58	3.83	4.33	4.80	5.24	5.66	6.07
0.80	1.75	1.85	1.99	2.15	2.33	2.53	2.75	2.98	3.22	3.47	3.73	4.23	4.72	5.17	5.60	6.02
0.90	1.67	1.77	1.90	2.06	2.24	2.44	2.66	2.89	3.12	3.37	3.62	4.14	4.63	5.10	5.54	5.97
1.0	1.59	1.69	1.82	1.98	2.16	2.36	2.57	2.80	3.03	3.27	3.52	4.04	4.54	5.02	5.47	5.91
1.2	1.45	1.55	1.68	1.83	2.00	2.20	2.40	2.62	2.85	3.09	3.33	3.83	4.35	4.85	5.33	5.78
1.4	1.33	1.43	1.55	1.70	1.86	2.05	2.25	2.47	2.69	2.92	3.15	3.64	4.15	4.67	5.16	5.64
1.6	1.22	1.32	1.44	1.58	1.74	1.92	2.11	2.32	2.54	2.76	2.98	3.45	3.96	4.48	4.99	5.48
1.8	1.13	1.22	1.34	1.47	1.63	1.80	1.99	2.19	2.40	2.61	2.82	3.27	3.76	4.28	4.81	5.31
2.0	1.05	1.14	1.25	1.38	1.53	1.69	1.87	2.07	2.27	2.46	2.67	3.11	3.58	4.09	4.61	5.14
2.2	0.975	1.06	1.17	1.30	1.44	1.60	1.77	1.95	2.14	2.33	2.53	2.95	3.41	3.90	4.42	4.95
2.4	0.912	0.998	1.10	1.22	1.36	1.51	1.68	1.85	2.03	2.21	2.40	2.81	3.25	3.73	4.23	4.75
2.6	0.856	0.940	1.04	1.15	1.29	1.43	1.59	1.76	1.92	2.09	2.28	2.67	3.11	3.57	4.06	4.57
2.8	0.806	0.887	0.983	1.09	1.22	1.36	1.51	1.67	1.83	1.99	2.17	2.55	2.97	3.42	3.90	4.40
3.0	0.762	0.839	0.932	1.04	1.16	1.29	1.44	1.59	1.74	1.90	2.07	2.44	2.84	3.28	3.75	4.24
x	0.000	0.005	0.017	0.035	0.057	0.083	0.113	0.144	0.178	0.213	0.250	0.327	0.408	0.492	0.579	0.667
y	0.500	0.455	0.417	0.385	0.357	0.333	0.313	0.294	0.278	0.263	0.250	0.227	0.208	0.192	0.179	0.167

Table 8-11a
Coefficients, C, for Eccentrically Loaded Weld Groups
Angle = 15°

Available strength of a weld group, ϕR_n or R_n/Ω, is determined with
$R_n = CC_1Dl$ ($\phi = 0.75$, $\Omega = 2.00$)

LRFD			ASD		
$C_{min} = \frac{P_u}{\phi C_1 Dl}$	$D_{min} = \frac{P_u}{\phi C C_1 l}$	$l_{min} = \frac{P_u}{\phi C C_1 D}$	$C_{min} = \frac{\Omega P_a}{C_1 Dl}$	$D_{min} = \frac{\Omega P_a}{C C_1 l}$	$l_{min} = \frac{\Omega P_a}{C C_1 D}$

where
P = required force, P_u or P_a, kips
D = number of sixteenths-of-an-inch in the fillet weld size
l = characteristic length of weld group, in.
a = e_x/l
e_x = horizontal component of eccentricity of P with respect to centroid of weld group, in.
C = coefficient tabulated below
C_1 = electrode strength coefficient from Table 8-3 (1.0 for E70XX electrodes)

Note: Shaded values indicate the value is based on the greatest available strength permitted by AISC *Specification* Sections J2.4, J2.4(a), J2.4(b) and J2.4(c).

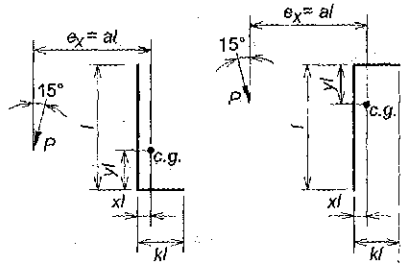

a	k															
	0	0.1	0.2	0.3	0.4	0.5	0.6	0.7	0.8	0.9	1.0	1.2	1.4	1.6	1.8	2.0
0.00	1.98	2.20	2.47	2.74	3.01	3.29	3.56	3.83	4.10	4.38	4.65	5.19	5.74	6.28	6.83	7.37
0.10	1.90	2.15	2.44	2.71	2.97	3.20	3.42	3.62	3.82	4.02	4.22	4.64	5.07	5.52	5.99	6.47
0.15	1.84	2.09	2.34	2.58	2.80	3.00	3.19	3.38	3.57	3.77	3.98	4.40	4.83	5.28	5.75	6.22
0.20	1.76	1.98	2.20	2.41	2.61	2.79	2.97	3.15	3.35	3.55	3.76	4.18	4.61	5.05	5.51	5.99
0.25	1.65	1.85	2.05	2.24	2.42	2.59	2.76	2.94	3.14	3.34	3.55	3.97	4.40	4.84	5.30	5.77
0.30	1.55	1.73	1.90	2.07	2.24	2.40	2.57	2.75	2.94	3.14	3.35	3.78	4.20	4.64	5.09	5.56
0.40	1.34	1.49	1.64	1.77	1.92	2.07	2.24	2.42	2.60	2.80	3.00	3.42	3.84	4.27	4.71	5.17
0.50	1.16	1.29	1.41	1.54	1.67	1.81	1.97	2.14	2.32	2.50	2.70	3.11	3.52	3.94	4.37	4.81
0.60	1.01	1.13	1.24	1.35	1.47	1.60	1.75	1.91	2.08	2.26	2.44	2.83	3.25	3.65	4.06	4.50
0.70	0.895	0.998	1.10	1.20	1.31	1.43	1.57	1.72	1.88	2.05	2.22	2.60	3.00	3.39	3.79	4.21
0.80	0.799	0.889	0.980	1.08	1.18	1.29	1.42	1.56	1.71	1.87	2.03	2.39	2.77	3.16	3.55	3.95
0.90	0.720	0.801	0.885	0.975	1.07	1.18	1.29	1.42	1.56	1.71	1.87	2.21	2.58	2.95	3.33	3.71
1.0	0.654	0.728	0.806	0.889	0.980	1.08	1.19	1.31	1.44	1.58	1.73	2.05	2.40	2.77	3.13	3.50
1.2	0.552	0.615	0.682	0.755	0.835	0.921	1.02	1.12	1.24	1.36	1.50	1.79	2.11	2.45	2.79	3.14
1.4	0.477	0.532	0.590	0.654	0.725	0.803	0.887	0.980	1.08	1.20	1.32	1.58	1.87	2.19	2.51	2.83
1.6	0.420	0.468	0.520	0.577	0.640	0.710	0.786	0.870	0.963	1.07	1.17	1.42	1.68	1.97	2.27	2.58
1.8	0.374	0.417	0.464	0.515	0.573	0.636	0.706	0.781	0.866	0.958	1.06	1.28	1.52	1.79	2.07	2.36
2.0	0.338	0.377	0.419	0.465	0.518	0.576	0.639	0.709	0.786	0.870	0.962	1.16	1.39	1.64	1.91	2.17
2.2	0.308	0.343	0.382	0.424	0.472	0.526	0.584	0.648	0.719	0.797	0.882	1.07	1.28	1.51	1.76	2.01
2.4	0.282	0.315	0.350	0.390	0.434	0.483	0.538	0.597	0.662	0.735	0.813	0.987	1.18	1.40	1.63	1.87
2.6	0.261	0.291	0.324	0.360	0.401	0.447	0.498	0.553	0.614	0.681	0.754	0.917	1.10	1.30	1.51	1.74
2.8	0.242	0.271	0.301	0.335	0.373	0.416	0.464	0.516	0.572	0.635	0.703	0.856	1.03	1.21	1.41	1.63
3.0	0.226	0.253	0.281	0.313	0.349	0.389	0.434	0.483	0.536	0.594	0.659	0.802	0.963	1.14	1.32	1.53
x	0.000	0.005	0.017	0.035	0.057	0.083	0.113	0.144	0.178	0.213	0.250	0.327	0.408	0.492	0.579	0.667
y	0.500	0.455	0.417	0.385	0.357	0.333	0.313	0.294	0.278	0.263	0.250	0.227	0.208	0.192	0.179	0.167

Table 8-11a (continued)
Coefficients, C, for Eccentrically Loaded Weld Groups
Angle = 30°

Available strength of a weld group, ϕR_n or R_n/Ω, is determined with
$R_n = CC_1Dl$ ($\phi = 0.75$, $\Omega = 2.00$)

LRFD	ASD
$C_{min} = \frac{P_u}{\phi C_1 Dl}$ $D_{min} = \frac{P_u}{\phi C C_1 l}$ $l_{min} = \frac{P_u}{\phi C C_1 D}$	$C_{min} = \frac{\Omega P_n}{C_1 Dl}$ $D_{min} = \frac{\Omega P_a}{C C_1 l}$ $l_{min} = \frac{\Omega P_a}{C C_1 D}$

where
P = required force, P_u or P_a, kips
D = number of sixteenths-of-an-inch in the fillet weld size
l = characteristic length of weld group, in.
$a = e_x/l$
e_x = horizontal component of eccentricity of P with respect to centroid of weld group, in.
C = coefficient tabulated below
C_1 = electrode strength coefficient from Table 8-3 (1.0 for E70XX electrodes)

Note: Shaded values indicate the value is based on the greatest available strength permitted by AISC *Specification* Sections J2.4, J2.4(a), J2.4(b) and J2.4(c).

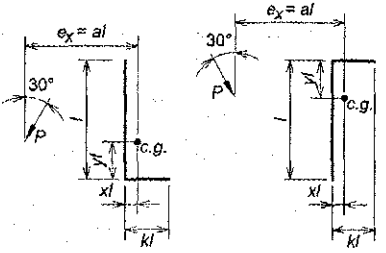

a	k															
	0	0.1	0.2	0.3	0.4	0.5	0.6	0.7	0.8	0.9	1.0	1.2	1.4	1.6	1.8	2.0
0.00	2.18	2.44	2.70	2.96	3.21	3.47	3.73	3.98	4.24	4.50	4.76	5.27	5.78	6.30	6.81	7.33
0.10	2.02	2.34	2.61	2.86	3.08	3.27	3.46	3.66	3.86	4.08	4.31	4.78	5.27	5.76	6.26	6.77
0.15	1.92	2.20	2.46	2.68	2.88	3.05	3.23	3.42	3.63	3.85	4.07	4.54	5.03	5.52	6.02	6.52
0.20	1.82	2.07	2.30	2.50	2.68	2.85	3.02	3.21	3.41	3.63	3.86	4.33	4.81	5.30	5.79	6.29
0.25	1.71	1.93	2.14	2.33	2.50	2.66	2.83	3.02	3.22	3.43	3.65	4.12	4.61	5.09	5.58	6.07
0.30	1.61	1.81	1.99	2.16	2.32	2.49	2.66	2.84	3.04	3.25	3.47	3.93	4.41	4.89	5.38	5.87
0.40	1.41	1.57	1.72	1.87	2.02	2.18	2.35	2.53	2.72	2.92	3.13	3.58	4.05	4.53	5.01	5.49
0.50	1.23	1.37	1.50	1.63	1.78	1.93	2.09	2.26	2.45	2.64	2.84	3.27	3.73	4.20	4.67	5.14
0.60	1.08	1.21	1.33	1.45	1.57	1.72	1.88	2.04	2.21	2.40	2.59	3.00	3.45	3.91	4.36	4.82
0.70	0.964	1.08	1.18	1.29	1.41	1.54	1.69	1.85	2.01	2.19	2.37	2.77	3.19	3.64	4.08	4.53
0.80	0.865	0.965	1.06	1.17	1.28	1.40	1.54	1.68	1.84	2.01	2.18	2.56	2.97	3.40	3.83	4.27
0.90	0.783	0.873	0.964	1.06	1.16	1.28	1.40	1.54	1.69	1.85	2.02	2.38	2.77	3.19	3.60	4.03
1.0	0.714	0.796	0.881	0.971	1.07	1.17	1.29	1.42	1.56	1.71	1.87	2.22	2.59	2.99	3.39	3.81
1.2	0.606	0.676	0.749	0.828	0.914	1.01	1.11	1.23	1.35	1.49	1.63	1.95	2.29	2.66	3.04	3.42
1.4	0.525	0.586	0.650	0.720	0.797	0.881	0.974	1.08	1.19	1.31	1.44	1.73	2.04	2.38	2.74	3.10
1.6	0.463	0.516	0.574	0.636	0.706	0.782	0.865	0.958	1.06	1.17	1.29	1.55	1.84	2.15	2.49	2.82
1.8	0.414	0.462	0.513	0.570	0.633	0.702	0.778	0.862	0.955	1.06	1.17	1.41	1.67	1.96	2.27	2.59
2.0	0.374	0.417	0.464	0.515	0.573	0.637	0.706	0.783	0.868	0.961	1.06	1.28	1.53	1.80	2.09	2.39
2.2	0.341	0.380	0.423	0.470	0.523	0.582	0.646	0.717	0.795	0.881	0.974	1.18	1.41	1.66	1.93	2.21
2.4	0.313	0.349	0.389	0.432	0.481	0.536	0.595	0.661	0.733	0.813	0.900	1.09	1.30	1.54	1.79	2.06
2.6	0.289	0.323	0.360	0.400	0.445	0.496	0.552	0.613	0.680	0.755	0.836	1.01	1.21	1.44	1.67	1.92
2.8	0.269	0.300	0.334	0.372	0.415	0.462	0.514	0.571	0.634	0.704	0.780	0.947	1.14	1.34	1.56	1.80
3.0	0.251	0.281	0.313	0.348	0.388	0.432	0.481	0.535	0.594	0.659	0.731	0.889	1.07	1.26	1.47	1.69
x	0.000	0.005	0.017	0.035	0.057	0.083	0.113	0.144	0.178	0.213	0.250	0.327	0.408	0.492	0.579	0.667
y	0.500	0.455	0.417	0.385	0.357	0.333	0.313	0.294	0.278	0.263	0.250	0.227	0.208	0.192	0.179	0.167

Table 8-11a (continued)
Coefficients, C, for Eccentrically Loaded Weld Groups
Angle = 45°

Available strength of a weld group, ϕR_n or R_n/Ω, is determined with
$R_n = CC_1Dl$ ($\phi = 0.75$, $\Omega = 2.00$)

LRFD	ASD
$C_{min} = \frac{P_u}{\phi C_1 Dl}$ $D_{min} = \frac{P_u}{\phi C C_1 l}$ $l_{min} = \frac{P_u}{\phi C C_1 D}$	$C_{min} = \frac{\Omega P_a}{C_1 Dl}$ $D_{min} = \frac{\Omega P_a}{C C_1 l}$ $l_{min} = \frac{\Omega P_a}{C C_1 D}$

where
P = required force, P_u or P_a, kips
D = number of sixteenths-of-an-inch in the fillet weld size
l = characteristic length of weld group, in.
$a = e_x/l$
e_x = horizontal component of eccentricity of P with respect to centroid of weld group, in.
C = coefficient tabulated below
C_1 = electrode strength coefficient from Table 8-3 (1.0 for E70XX electrodes)

Note: Shaded values indicate the value is based on the greatest available strength permitted by AISC *Specification* Sections J2.4, J2.4(a), J2.4(b) and J2.4(c).

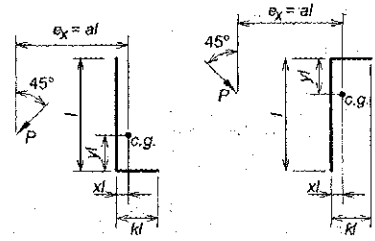

a	k															
	0	0.1	0.2	0.3	0.4	0.5	0.6	0.7	0.8	0.9	1.0	1.2	1.4	1.6	1.8	2.0
0.00	2.41	2.57	2.80	3.04	3.27	3.51	3.74	3.97	4.21	4.44	4.67	5.14	5.61	6.08	6.54	7.01
0.10	2.24	2.52	2.76	2.97	3.17	3.37	3.58	3.80	4.02	4.25	4.49	4.98	5.47	5.96	6.45	6.94
0.15	2.09	2.38	2.61	2.80	2.98	3.17	3.37	3.58	3.81	4.04	4.28	4.77	5.27	5.77	6.27	6.77
0.20	1.96	2.23	2.45	2.63	2.80	2.98	3.18	3.39	3.61	3.84	4.08	4.57	5.06	5.57	6.08	6.59
0.25	1.85	2.10	2.30	2.47	2.63	2.81	3.00	3.21	3.44	3.67	3.90	4.39	4.88	5.38	5.88	6.39
0.30	1.74	1.97	2.16	2.33	2.49	2.65	2.84	3.05	3.27	3.50	3.73	4.22	4.71	5.21	5.71	6.22
0.40	1.55	1.73	1.90	2.06	2.22	2.38	2.56	2.76	2.97	3.19	3.43	3.91	4.40	4.90	5.41	5.91
0.50	1.38	1.54	1.68	1.83	1.99	2.15	2.32	2.51	2.71	2.92	3.15	3.62	4.12	4.62	5.12	5.62
0.60	1.23	1.38	1.51	1.64	1.79	1.95	2.11	2.29	2.48	2.69	2.90	3.36	3.85	4.34	4.84	5.35
0.70	1.11	1.24	1.36	1.48	1.62	1.77	1.93	2.10	2.28	2.48	2.68	3.13	3.60	4.09	4.59	5.09
0.80	1.00	1.12	1.23	1.35	1.48	1.62	1.77	1.94	2.11	2.29	2.49	2.92	3.38	3.85	4.34	4.84
0.90	0.915	1.02	1.13	1.24	1.36	1.49	1.64	1.79	1.96	2.13	2.32	2.73	3.17	3.64	4.12	4.60
1.0	0.839	0.937	1.04	1.14	1.25	1.38	1.51	1.66	1.82	1.99	2.17	2.56	2.99	3.44	3.90	4.38
1.2	0.719	0.802	0.889	0.982	1.08	1.19	1.31	1.45	1.59	1.75	1.91	2.27	2.66	3.09	3.53	3.98
1.4	0.627	0.700	0.777	0.860	0.950	1.05	1.16	1.28	1.41	1.55	1.70	2.03	2.40	2.79	3.20	3.64
1.6	0.555	0.620	0.689	0.764	0.846	0.935	1.03	1.14	1.27	1.40	1.53	1.84	2.17	2.54	2.93	3.34
1.8	0.498	0.556	0.618	0.686	0.761	0.843	0.933	1.03	1.14	1.26	1.39	1.67	1.98	2.32	2.69	3.08
2.0	0.451	0.504	0.560	0.622	0.691	0.766	0.849	0.942	1.04	1.15	1.27	1.53	1.82	2.14	2.48	2.85
2.2	0.412	0.460	0.512	0.569	0.632	0.702	0.779	0.864	0.959	1.06	1.17	1.41	1.69	1.98	2.30	2.65
2.4	0.379	0.423	0.471	0.524	0.583	0.648	0.719	0.798	0.886	0.982	1.08	1.31	1.57	1.84	2.15	2.47
2.6	0.351	0.392	0.436	0.485	0.540	0.601	0.668	0.741	0.823	0.913	1.01	1.22	1.46	1.72	2.01	2.31
2.8	0.327	0.365	0.406	0.452	0.503	0.560	0.623	0.692	0.768	0.852	0.943	1.14	1.37	1.62	1.88	2.17
3.0	0.306	0.341	0.380	0.423	0.471	0.525	0.584	0.649	0.720	0.799	0.885	1.07	1.29	1.52	1.77	2.04
x	0.000	0.005	0.017	0.035	0.057	0.083	0.113	0.144	0.178	0.213	0.250	0.327	0.408	0.492	0.579	0.667
y	0.500	0.455	0.417	0.385	0.357	0.333	0.313	0.294	0.278	0.263	0.250	0.227	0.208	0.192	0.179	0.167

Table 8-11a (continued)
Coefficients, C, for Eccentrically Loaded Weld Groups
Angle = 60°

Available strength of a weld group, ϕR_n or R_n/Ω, is determined with
$R_n = CC_1Dl$ ($\phi = 0.75$, $\Omega = 2.00$)

LRFD	ASD
$C_{min} = \frac{P_u}{\phi C_1 Dl}$ $D_{min} = \frac{P_u}{\phi C C_1 l}$ $l_{min} = \frac{P_u}{\phi C C_1 D}$	$C_{min} = \frac{\Omega P_a}{C_1 Dl}$ $D_{min} = \frac{\Omega P_a}{C C_1 l}$ $l_{min} = \frac{\Omega P_a}{C C_1 D}$

where
P = required force, P_u or P_a, kips
D = number of sixteenths-of-an-inch in the fillet weld size
l = characteristic length of weld group, in.
a = e_x/l
e_x = horizontal component of eccentricity of P with respect to centroid of weld group, in.
C = coefficient tabulated below
C_1 = electrode strength coefficient from Table 8-3 (1.0 for E70XX electrodes)

Note: Shaded values indicate the value is based on the greatest available strength permitted by AISC *Specification* Sections J2.4, J2.4(a), J2.4(b) and J2.4(c).

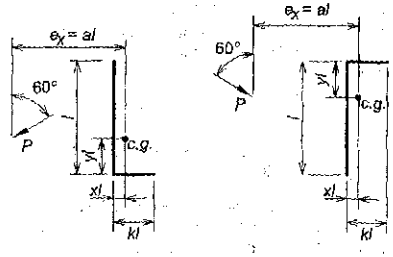

a	k															
	0	0.1	0.2	0.3	0.4	0.5	0.6	0.7	0.8	0.9	1.0	1.2	1.4	1.6	1.8	2.0
0.00	2.60	2.79	3.01	3.23	3.44	3.66	3.88	4.10	4.32	4.54	4.76	5.19	5.63	6.07	6.50	6.94
0.10	2.43	2.68	2.91	3.12	3.34	3.56	3.79	4.01	4.24	4.46	4.69	5.14	5.58	6.02	6.47	6.91
0.15	2.31	2.56	2.77	2.97	3.18	3.40	3.62	3.85	4.08	4.32	4.55	5.01	5.47	5.93	6.38	6.83
0.20	2.18	2.44	2.63	2.82	3.02	3.24	3.46	3.69	3.92	4.15	4.39	4.87	5.34	5.81	6.27	6.73
0.25	2.07	2.32	2.50	2.68	2.88	3.09	3.31	3.54	3.77	4.01	4.24	4.71	5.19	5.67	6.15	6.61
0.30	1.97	2.21	2.39	2.56	2.75	2.96	3.18	3.41	3.64	3.88	4.11	4.58	5.05	5.53	6.01	6.49
0.40	1.79	2.00	2.19	2.35	2.53	2.72	2.94	3.16	3.40	3.64	3.88	4.35	4.83	5.29	5.76	6.23
0.50	1.63	1.82	1.99	2.16	2.33	2.51	2.72	2.94	3.17	3.41	3.65	4.14	4.62	5.10	5.57	6.03
0.60	1.49	1.67	1.82	1.99	2.15	2.33	2.52	2.74	2.97	3.20	3.44	3.94	4.43	4.91	5.39	5.86
0.70	1.37	1.53	1.68	1.83	2.00	2.17	2.35	2.55	2.77	3.01	3.24	3.74	4.23	4.73	5.21	5.69
0.80	1.26	1.41	1.55	1.70	1.85	2.02	2.20	2.39	2.60	2.83	3.06	3.55	4.04	4.54	5.03	5.52
0.90	1.17	1.30	1.44	1.57	1.73	1.89	2.06	2.24	2.44	2.66	2.89	3.37	3.86	4.36	4.86	5.35
1.0	1.08	1.21	1.34	1.47	1.61	1.77	1.93	2.11	2.30	2.51	2.73	3.20	3.69	4.18	4.68	5.18
1.2	0.946	1.06	1.17	1.29	1.42	1.56	1.71	1.88	2.06	2.25	2.45	2.89	3.36	3.85	4.35	4.84
1.4	0.837	0.935	1.04	1.15	1.26	1.39	1.53	1.69	1.85	2.03	2.22	2.63	3.08	3.55	4.04	4.53
1.6	0.748	0.837	0.929	1.03	1.13	1.25	1.38	1.53	1.68	1.85	2.02	2.41	2.83	3.28	3.75	4.23
1.8	0.676	0.756	0.840	0.931	1.03	1.14	1.26	1.39	1.54	1.69	1.85	2.21	2.61	3.04	3.49	3.96
2.0	0.616	0.689	0.766	0.850	0.941	1.04	1.15	1.28	1.41	1.56	1.71	2.05	2.42	2.83	3.26	3.71
2.2	0.565	0.632	0.703	0.781	0.866	0.960	1.06	1.18	1.30	1.44	1.58	1.90	2.26	2.64	3.05	3.49
2.4	0.522	0.584	0.650	0.722	0.802	0.889	0.986	1.09	1.21	1.34	1.47	1.77	2.11	2.48	2.87	3.28
2.6	0.485	0.542	0.604	0.671	0.746	0.828	0.918	1.02	1.13	1.25	1.38	1.66	1.98	2.33	2.70	3.10
2.8	0.453	0.506	0.563	0.626	0.697	0.774	0.859	0.954	1.06	1.17	1.29	1.56	1.86	2.19	2.55	2.93
3.0	0.424	0.474	0.528	0.587	0.653	0.727	0.807	0.896	0.995	1.10	1.22	1.47	1.76	2.07	2.41	2.77
x	0.000	0.005	0.017	0.035	0.057	0.083	0.113	0.144	0.178	0.213	0.250	0.327	0.408	0.492	0.579	0.667
y	0.500	0.455	0.417	0.385	0.357	0.333	0.313	0.294	0.278	0.263	0.250	0.227	0.208	0.192	0.179	0.167

Table 8-11a (continued)
Coefficients, C, for Eccentrically Loaded Weld Groups
Angle = 75°

Available strength of a weld group, ϕR_n or R_n/Ω, is determined with
$R_n = CC_1Dl$ ($\phi = 0.75$, $\Omega = 2.00$)

LRFD	ASD
$C_{min} = \dfrac{P_u}{\phi C_1 Dl}$ $D_{min} = \dfrac{P_u}{\phi C C_1 l}$ $l_{min} = \dfrac{P_u}{\phi C C_1 D}$	$C_{min} = \dfrac{\Omega P_a}{C_1 Dl}$ $D_{min} = \dfrac{\Omega P_a}{C C_1 l}$ $l_{min} = \dfrac{\Omega P_a}{C C_1 D}$

where
P = required force, P_u or P_a, kips
D = number of sixteenths-of-an-inch in the fillet weld size
l = characteristic length of weld group, in.
a = e_x/l
e_x = horizontal component of eccentricity of P with respect to centroid of weld group, in.
C = coefficient tabulated below
C_1 = electrode strength coefficient from Table 8-3 (1.0 for E70XX electrodes)

Note: Shaded values indicate the value is based on the greatest available strength permitted by AISC *Specification* Sections J2.4, J2.4(a), J2.4(b) and J2.4(c).

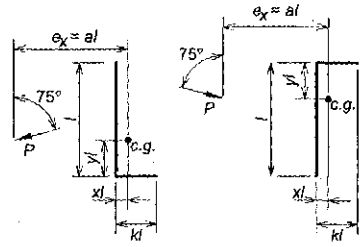

a	k															
	0	0.1	0.2	0.3	0.4	0.5	0.6	0.7	0.8	0.9	1.0	1.2	1.4	1.6	1.8	2.0
0.00	2.74	2.92	3.11	3.30	3.49	3.69	3.88	4.07	4.26	4.46	4.65	5.03	5.42	5.80	6.19	6.57
0.10	2.59	2.86	3.11	3.30	3.49	3.69	3.88	4.07	4.26	4.46	4.65	5.03	5.42	5.80	6.19	6.57
0.15	2.50	2.76	3.02	3.26	3.48	3.68	3.88	4.07	4.26	4.45	4.65	5.03	5.42	5.80	6.19	6.57
0.20	2.43	2.67	2.92	3.17	3.40	3.63	3.84	4.05	4.25	4.45	4.64	5.03	5.41	5.80	6.18	6.57
0.25	2.35	2.59	2.83	3.07	3.30	3.53	3.76	3.97	4.19	4.39	4.59	4.99	5.39	5.78	6.17	6.56
0.30	2.28	2.52	2.74	2.97	3.21	3.44	3.67	3.89	4.10	4.32	4.53	4.93	5.34	5.73	6.13	6.52
0.40	2.16	2.39	2.59	2.81	3.04	3.27	3.50	3.73	3.95	4.16	4.37	4.79	5.21	5.62	6.02	6.42
0.50	2.05	2.27	2.46	2.67	2.89	3.13	3.36	3.60	3.82	4.04	4.25	4.67	5.07	5.48	5.90	6.31
0.60	1.94	2.16	2.35	2.54	2.76	2.99	3.23	3.47	3.70	3.93	4.15	4.58	4.99	5.38	5.78	6.18
0.70	1.85	2.05	2.24	2.43	2.64	2.86	3.10	3.34	3.58	3.82	4.05	4.49	4.91	5.32	5.71	6.11
0.80	1.75	1.95	2.14	2.32	2.52	2.74	2.98	3.22	3.46	3.71	3.95	4.40	4.84	5.25	5.66	6.05
0.90	1.67	1.86	2.04	2.22	2.41	2.63	2.86	3.10	3.35	3.59	3.84	4.31	4.76	5.19	5.60	6.00
1.0	1.59	1.77	1.95	2.13	2.31	2.52	2.75	2.98	3.23	3.48	3.73	4.21	4.67	5.11	5.54	5.95
1.2	1.45	1.62	1.78	1.95	2.13	2.32	2.54	2.77	3.01	3.26	3.51	4.01	4.49	4.96	5.40	5.83
1.4	1.33	1.48	1.64	1.80	1.97	2.15	2.35	2.57	2.81	3.05	3.30	3.81	4.31	4.79	5.25	5.70
1.6	1.22	1.36	1.51	1.66	1.82	2.00	2.19	2.40	2.62	2.86	3.11	3.61	4.12	4.61	5.09	5.55
1.8	1.13	1.26	1.40	1.54	1.69	1.86	2.04	2.24	2.45	2.68	2.92	3.42	3.93	4.43	4.92	5.40
2.0	1.05	1.17	1.30	1.43	1.58	1.74	1.91	2.10	2.30	2.52	2.75	3.24	3.75	4.25	4.75	5.23
2.2	0.975	1.09	1.21	1.34	1.48	1.63	1.80	1.97	2.17	2.38	2.60	3.07	3.57	4.07	4.58	5.07
2.4	0.912	1.02	1.13	1.26	1.39	1.53	1.69	1.86	2.05	2.25	2.46	2.92	3.41	3.91	4.41	4.90
2.6	0.856	0.959	1.07	1.18	1.31	1.44	1.59	1.76	1.94	2.13	2.33	2.78	3.25	3.74	4.24	4.74
2.8	0.806	0.903	1.00	1.11	1.23	1.36	1.51	1.67	1.84	2.02	2.21	2.64	3.11	3.59	4.08	4.58
3.0	0.762	0.853	0.949	1.05	1.17	1.29	1.43	1.58	1.74	1.92	2.11	2.52	2.97	3.44	3.93	4.42
x	0.000	0.005	0.017	0.035	0.057	0.083	0.113	0.144	0.178	0.213	0.250	0.327	0.408	0.492	0.579	0.667
y	0.500	0.455	0.417	0.385	0.357	0.333	0.313	0.294	0.278	0.263	0.250	0.227	0.208	0.192	0.179	0.167

Table 8-12
Approximate Number of Passes for Welds

Weld Size* in.	Fillet Welds	Single-Bevel Groove Welds (Back-Up Weld Not Included)		Single-V Groove Welds (Back-Up Weld Not Included)		
		30° Bevel	45° Bevel	30° Groove Angle	60° Groove Angle	90° Groove Angle
3/16	1	—	—	—	—	—
1/4	1	1	1	2	3	3
5/16	1	1	1	2	3	3
3/8	3	2	2	3	4	6
7/16	4	2	2	3	4	6
1/2	4	2	2	4	5	7
5/8	6	3	3	4	6	8
3/4	8	4	5	4	7	9
7/8	—	5	8	5	10	10
1	—	5	11	5	13	22
1 1/8	—	7	11	9	15	27
1 1/4	—	8	11	12	16	32
1 3/8	—	9	15	13	21	36
1 1/2	—	9	18	13	25	40
1 3/4	—	11	21	13	25	40

*Plate thickness for groove welds.

PART 9

DESIGN OF CONNECTING ELEMENTS

SCOPE 9–3

GROSS AREA, EFFECTIVE NET AREA, AND WHITMORE SECTION 9–3

Gross Area 9–3

Effective Net Area 9–3

Whitmore Section (Effective Width) 9–3

CONNECTING ELEMENTS SUBJECT TO COMBINED LOADING 9–3

CONNECTING ELEMENTS SUBJECT TO TENSION 9–4

CONNECTING ELEMENTS SUBJECT TO SHEAR 9–4

CONNECTING ELEMENTS SUBJECT TO BLOCK SHEAR RUPTURE 9–5

CONNECTING ELEMENT RUPTURE STRENGTH AT WELDS 9–5

CONNECTING ELEMENTS SUBJECT TO COMPRESSION YIELDING AND BUCKLING 9–5

AFFECTED AND CONNECTING ELEMENTS SUBJECT TO FLEXURE 9–6

Yielding, Lateral-Torsional Buckling, and Local Buckling 9–6

Rupture 9–6

Coped Beam Strength 9–6

BEARING LIMIT STATES 9–10

Bearing Strength at Bolt Holes 9–10

Steel-on-Steel Bearing Strength (Other Than at Bolt Holes) 9–10

Bearing Strength on Concrete or Masonry 9–10

OTHER SPECIFICATION REQUIREMENTS AND DESIGN CONSIDERATIONS 9–10

Prying Action 9–10

Rotational Ductility 9–14

Concentrated Forces 9–15

Shims and Fillers 9–15

Copes, Blocks and Cuts 9–16

Web Reinforcement of Coped Beams 9–17

DESIGN TABLE DISCUSSION 9–19
PART 9 REFERENCES 9–22
DESIGN TABLES 9–23
Table 9-1. Reduction in Area for Holes 9–23
Table 9-2. Elastic Section Modulus for Coped W-Shapes 9–24
Table 9-3. Block Shear Rupture 9–33
Table 9-4. Beam Bearing Constants 9–40

SCOPE

The specification requirements and other design considerations summarized in this Part apply to the design of connecting elements (angles, plates, tees, gussets, etc.) used to transfer load from one structural member to another, as well as the affected elements of the connected members (beam webs, beam flanges, column webs, column flanges, etc.). For design considerations for bolts and welds, see Parts 7 and 8, respectively. For design provisions specific to particular connection configurations, see Parts 10 through 15.

GROSS AREA, EFFECTIVE NET AREA, AND WHITMORE SECTION

In the determination of the available strength of connecting elements, the gross area, A_g, is used for the yielding limit states, and the net area, A_n, is used for the rupture limit states. In either case, the Whitmore section may limit the effective width to less than the overall dimension of a connecting element.

Gross Area

The gross area, A_g, is determined as specified in AISC *Specification* Section B4.3, subject to the limitations given below for the Whitmore section.

Effective Net Area

The effective net area, A_e, is determined as specified in AISC *Specification* Section J4.1, subject to the limitations given below for the Whitmore section. The reduction in area for bolt holes can be determined using Table 9-1.

Whitmore Section (Effective Width)

When connecting elements are large in comparison to the bolted or welded joints within them, the Whitmore section may limit the gross and net areas of the connecting element to less than the full area (Whitmore, 1952). As illustrated in Figure 9-1, the width of the Whitmore section, l_w, is determined at the end of the joint by spreading the force from the start of the joint 30° to each side in the connecting element along the line of force. The Whitmore section may spread across the joint between connecting elements, but cannot spread beyond an unconnected edge.

CONNECTING ELEMENTS SUBJECT TO COMBINED LOADING

Connection design has traditionally been based on simple stresses, such as shear, tension, compression or flexure, not taken in combination. This simplification is adequate because connection elements are usually small or short enough that an interaction-type distribution cannot form. Even a theoretical combination analysis using the von Mises criterion for plane stress is not any more refined. To illustrate this point, von Mises criterion is expressed as

$$f_e = \sqrt{f_x^2 - f_x f_y + f_y^2 + 3f_{xy}^2} \le F_y \qquad (9\text{-}1)$$

where

f_x and f_y = normal stresses, ksi
f_{xy} = shear stress, ksi
F_y = specified minimum yield stress, ksi

This formulation requires three stresses at any one point. Assuming f_{xy} and f_x are known for any one cut section, f_y on the perpendicular cut section is still undefined and must be assumed, thereby bringing inaccuracy into the formulation. Compounding this dilemma, f_y could be assumed as equal to zero, equal to and having the same sign as f_x, or equal to and having the opposite sign of f_x. Thus, what might appear to be a more sophisticated approach to the analysis and design of a connection does not necessarily add any reliability to the resulting design.

Though shear and normal stress interaction is generally not included in AISC design procedures, it is explicitly considered in the design of the extended configuration of the single plate shear connection in Part 10 (Muir and Hewitt, 2009). The intent is to prevent other limit states from controlling.

CONNECTING ELEMENTS SUBJECT TO TENSION

The available strength due to tension yielding and tension rupture, ϕR_n or R_n/Ω, which must equal or exceed the required tensile strength, R_u or R_a, respectively, is determined in accordance with AISC *Specification* Section J4.1.

CONNECTING ELEMENTS SUBJECT TO SHEAR

The available strength due to shear yielding and shear rupture, ϕR_n or R_n/Ω, which must equal or exceed the required shear strength, R_u or R_a, respectively, are determined in accordance with AISC *Specification* Section J4.2.

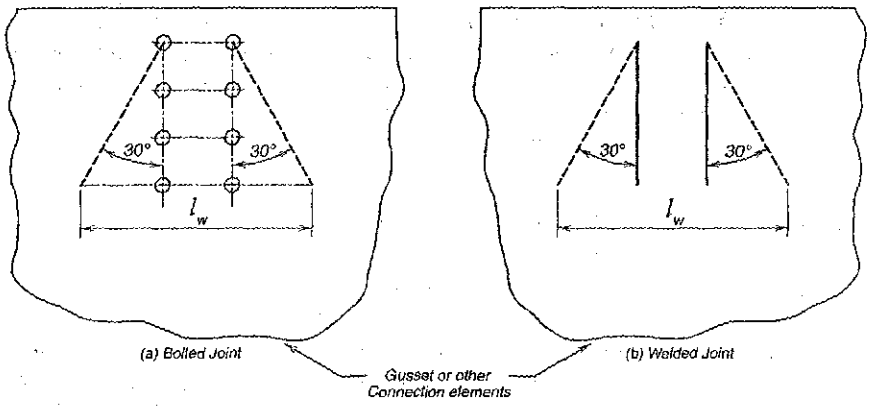

Fig. 9-1. Illustration of the width of the Whitmore section.

CONNECTING ELEMENTS SUBJECT TO BLOCK SHEAR RUPTURE

The available strength due to block shear rupture, ϕR_n or R_n/Ω, which must equal or exceed the required strength, R_u or R_a, respectively, is determined in accordance with AISC *Specification* Section J4.3. The values tabulated in Table 9-3 are used to calculate the available block shear rupture strength.

CONNECTING ELEMENT RUPTURE STRENGTH AT WELDS

In many cases, the load path from a weld to the connecting element is such that the strength of the connecting element can be evaluated directly. However, in some cases, the available strength of the connecting element is not directly calculable. For example, while the strength of the beam-web welds for a double-angle connection can be directly calculated, the strength of the beam web at this weld cannot. In cases such as these, it is often convenient to calculate the minimum base metal thickness that will match the available shear rupture strength of the base metal to the available shear rupture strength of the weld(s).

For fillet welds with $F_{EXX} = 70$ ksi on one side of the connection, the minimum base metal thickness required to match the shear rupture strength of the connecting element to the shear rupture strength of the base metal is

$$t_{min} = \frac{0.60F_{EXX}\left(\frac{\sqrt{2}}{2}\right)\left(\frac{D}{16}\right)}{0.6F_u} = \frac{3.09D}{F_u} \tag{9-2}$$

For fillet welds with $F_{EXX} = 70$ ksi on both sides of the connecting element, the minimum base metal thickness required to match the shear rupture strength of the connecting element to the shear rupture strength of the base metal is 2 times Equation 9-2:

$$t_{min} = \frac{6.19D}{F_u} \tag{9-3}$$

where

D = number of sixteenths of an inch in the weld size on each side of the connecting element

F_u = specified minimum tensile strength of the connecting element, ksi

CONNECTING ELEMENTS SUBJECT TO COMPRESSION YIELDING AND BUCKLING

When connecting elements are subject to compression, the available strength, ϕP_n or P_n/Ω, which must equal or exceed the required compressive strength, P_u or P_a, respectively, is determined in accordance with AISC *Specification* Section J4.4.

AFFECTED AND CONNECTING ELEMENTS SUBJECT TO FLEXURE

Affected and connecting elements are normally short enough and thick enough that flexural effects, if present at all, do not impact the design. When such elements are long enough and thin enough that flexural effects must be considered, the following provisions are used for determining the available strength.

Yielding, Lateral-Torsional Buckling, and Local Buckling

Generally, the available flexural strength, ϕM_n or M_n/Ω, which must equal or exceed the required flexural strength of affected and connecting elements, M_u or M_a, respectively, is determined in accordance with AISC *Specification* Section J4.5 and Chapter F. Section F1.1 provides guidance based upon cross-section shape for the applicable Chapter F section.

Treatment of coped beams is provided in the following.

Rupture

For beams and rolled girders with bolt holes in the tension flange, see AISC *Specification* Section F13.1. For affected and connecting elements, the available flexural rupture strength, $\phi_b M_n$ or M_n/Ω_b, is

$$M_n = F_u Z_{net} \tag{9-4}$$

$$\phi_b = 0.75 \qquad \Omega_b = 2.00$$

where

Z_{net} = net plastic section modulus of the affected or connecting element, in.^{3}

Coped Beam Strength

For beam ends with short copes no greater than the length of the connection angle(s), plate, or tee, flexural local web buckling will generally not occur. Otherwise, the end reaction for a coped beam may be limited by the flexural limit states of yielding, rupture, flexural local buckling, or lateral-torsional buckling. The strength of coped beams with bolted shear connections as shown in Part 10 will rarely be governed by flexural rupture. Other limit states, such as block shear rupture, bolt shear rupture, and bolt bearing will generally limit the strength of the connection.

For a coped beam, the required flexural strength is

LRFD		ASD	
$M_u = R_u e$	(9-5a)	$M_a = R_a e$	(9-5b)

where

R_u or R_a = beam end reaction (LRFD or ASD), kips

e = distance from the face of the cope to the point of inflection of the beam, in. It is usually assumed that the point of inflection is located at the face of the supporting member and e is as shown in Figure 9-2. However, depending upon the connection type and stiffness and support condition, the point of inflection may move away from the face of the supporting member; when this is the

case, a lesser value of e may be justified, and the use of e shown in Figure 9-2 is conservative.

The available flexural local buckling strength of a beam coped at the top flange or both the top and bottom flanges must equal or exceed the required strength. The available strength, $\phi_b M_n$ or M_n/Ω_b, is

$$M_n = F_{cr} S_{net} \tag{9-6}$$

$$\phi_b = 0.90 \qquad \Omega_b = 1.67$$

where

F_{cr} = flexural local buckling stress, determined according to the following, ksi

S_{net} = net section modulus, in.^{3} Values of S_{net} for beams coped at the top flange only are tabulated in Table 9-2.

1. When a beam is coped at the top flange only, the flexural local buckling stress is based upon the classical plate buckling formula with buckling coefficient, k, corresponding to the condition with three edges simply supported and one free edge. An additional plate buckling model adjustment factor, f, is applied to account for stress concentrations at the cope and to correlate the solution with experimental results (Cheng and Yura, 1986).

   The flexural local buckling stress for a beam coped at the top flange only when $c \le 2d$ and $d_c \le d/2$ (see Figure 9-2) is

$$F_{cr} = \frac{\pi^2 E}{12\left(1-\nu^2\right)}\left(\frac{t_w}{h_o}\right)^2 fk \le F_y$$

$$= 26{,}210\left(\frac{t_w}{h_o}\right)^2 fk \le F_y (\text{ksi}) \tag{9-7}$$

where

E = 29,000 ksi = modulus of elasticity of steel

F_y = specified minimum yield stress of beam web material, ksi

ν = 0.3 = Poisson's ratio

f = plate buckling model adjustment factor determined as follows

When $\frac{c}{d} \le 1.0$

$$f = \frac{2c}{d} \tag{9-8}$$

When $\frac{c}{d} > 1.0$

$$f = 1 + \frac{c}{d} \tag{9-9}$$

t_w = thickness of web, in.

k = plate buckling coefficient determined as follows

When $\frac{c}{h_o} \le 1.0$

$$k = 2.2\left(\frac{h_o}{c}\right)^{1.65} \tag{9-10}$$

When $\frac{c}{h_o} > 1.0$

$$k = \frac{2.2h_o}{c} \tag{9-11}$$

$h_o = d - d_c$, reduced beam depth, in. Note that, for convenience, the dimension h_o, as illustrated in Figure 9-2, is used in these calculations instead of the more precise dimension h_1 to eliminate the detailed calculation required to locate the neutral axis of the coped beam. Alternatively, the dimension h_1 may be substituted for h_o in the local buckling calculations.

c = cope length as illustrated in Figure 9-2, in.

d = beam depth, in.

d_c = cope depth as illustrated in Figure 9-2, in.

2. For a beam with the same cope length at both flanges, the flexural local buckling stress when $c \le 2d$ and $d_c \le 0.2d$ (see Figure 9-3) is (Cheng and Yura, 1986)

$$F_{cr} = 0.62\pi E\frac{t_w^2}{ch_o}f_d \le F_y \tag{9-12}$$

where

$$f_d = 3.5 - 7.5\left(\frac{d_{ci}}{d}\right) \tag{9-13}$$

d_{ci} = cope depth at the compression flange as illustrated in Figure 9-3, in.

h_o = reduced beam depth as illustrated in Figure 9-3, in.

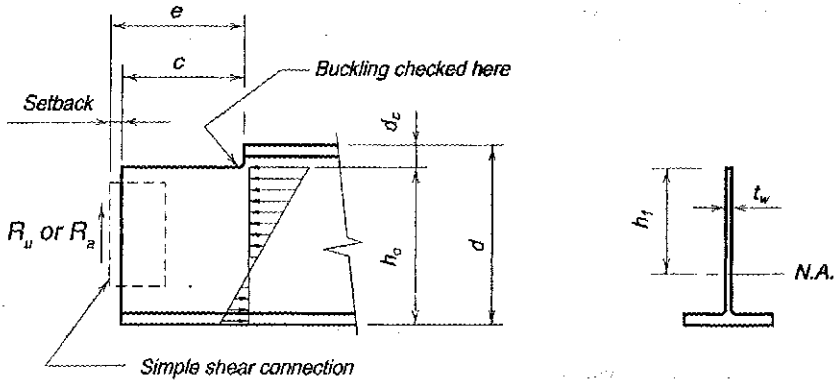

Fig. 9-2. Flexural local buckling of beam web coped at top flange only.

3. For all other conditions, a conservative procedure also based upon the classical plate buckling equation can be used. Including both elastic and inelastic buckling, the available buckling stress, ϕF_{cr} or F_{cr}/Ω, is

$$F_{cr} = QF_y \tag{9-14}$$

When $\lambda \le 0.7$

$$Q = 1 \tag{9-15}$$

When $0.7 < \lambda \le 1.41$

$$Q = (1.34 - 0.486\lambda) \tag{9-16}$$

When $\lambda > 1.41$

$$Q = \frac{1.30}{\lambda^2} \tag{9-17}$$

where

$$\lambda = \frac{h_o\sqrt{F_y}}{10t_w\sqrt{475 + 280\left(\frac{h_o}{c}\right)^2}} \tag{9-18}$$

h_o = reduced beam depth as illustrated in Figure 9-3, in.

4. When the tension flange cope is longer than the compression flange cope, flexural yielding should be checked at the end of the tension flange cope. The available strength, $\phi_b M_n$ or M_n/Ω_b, is

$$M_n = F_y S_{net} \tag{9-19}$$

$$\phi_b = 0.90 \qquad \Omega_b = 1.67$$

where

S_{net} = net elastic section modulus at the end of the tension flange cope, in.^{3}

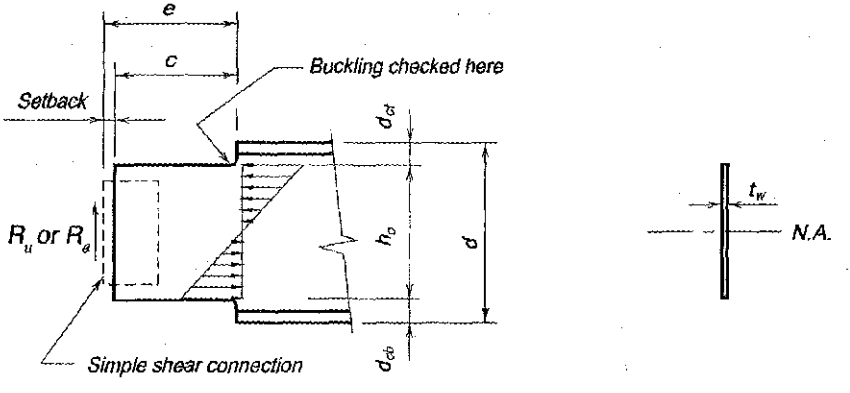

Fig. 9-3. Flexural local buckling of beam web coped at both flanges.

BEARING LIMIT STATES

Bearing Strength at Bolt Holes

For available bearing strength at bolt holes, see Part 7.

Steel-on-Steel Bearing Strength (Other Than at Bolt Holes)

Bearing strength for applications other than at bolt holes is determined as given in AISC *Specification* Section J7. The fabrication and erection requirements in AISC *Specification* Sections M2.6, M2.8 and M4.4 are applicable to connecting elements that transfer load by contact bearing on steel.

Bearing Strength on Concrete or Masonry

The bearing strength of concrete is determined as given in AISC *Specification* Section J8. For bearing on masonry, see *Building Code Requirements for Masonry Structures*, ACI 530/ASCE 5/TMS 402 (ACI/ASCE/TMS, 2005a) and *Specification for Masonry Structures*, ACI 530.1/ASCE 6/TMS 602 (ACI/ASCE/TMS, 2005b). The fabrication and erection requirements in AISC *Specification* Sections M2.8 and M4.1 are applicable to connecting elements that transfer load by contact bearing on concrete or masonry.

OTHER SPECIFICATION REQUIREMENTS AND DESIGN CONSIDERATIONS

The following other specification requirements and design considerations apply to the design of connecting elements:

Prying Action

Prying action is a phenomenon whereby the deformation of a connecting element under a tensile force increases the tensile force in the bolt above that due to the applied tensile force alone. Design for prying action includes the selection of bolt diameter and fitting thickness such that there is sufficient strength in the connecting element and the bolt. The following discussion of prying action is similar to what has been considered prior to the 13th Edition *Steel Construction Manual*, except that the design is based on F_u, which provides better correlation with available test data than previous design methods. For the development of the prying action equations presented here, see Thornton (1992) and Swanson (2002).

Consider the tee or angle used in a hanger connection as shown in Figure 9-4. The deformation of the connected tee flange or angle leg is assumed to be in double curvature, as shown in Figure 9-4. The dimension p identifies the tributary length for each bolt shown. Note that p may be limited by the edge of the plate for the bolt closest to the edge.

The thickness required to eliminate prying action, t_{min}, is determined as

LRFD	ASD
$t_{min} = \sqrt{\dfrac{4Tb'}{\phi p F_u}}$ (9-20a)	$t_{min} = \sqrt{\dfrac{\Omega 4Tb'}{pF_u}}$ (9-20b)
$\phi = 0.90$	$\Omega = 1.67$

where

F_u = specified minimum tensile strength of connecting element, ksi

T = required strength, r_{ut} or r_{at}, per bolt, kips

$$b' = \left(b - \frac{d_b}{2}\right) \tag{9-21}$$

b = for a tee-type connecting element, the distance from bolt centerline to the face of the tee stem, in.; for an angle-type connecting element, the distance from bolt centerline to centerline of angle leg, in.

d_b = bolt diameter, in.

p = tributary length; maximum = $2b$, but $\le s$, unless tests indicate larger lengths can be used. See Dowswell (2011) and Wheeler et al. (1998).

s = bolt spacing, in.

When the fitting thickness, t, is greater than or equal to t_{min}, no further check of prying action is necessary. In this solution, the additional force in the bolt due to prying action, q, is essentially zero.

Alternatively, it is usually possible to determine a lesser required thickness by designing the connecting element and bolted joint for the actual effects of prying action with q greater

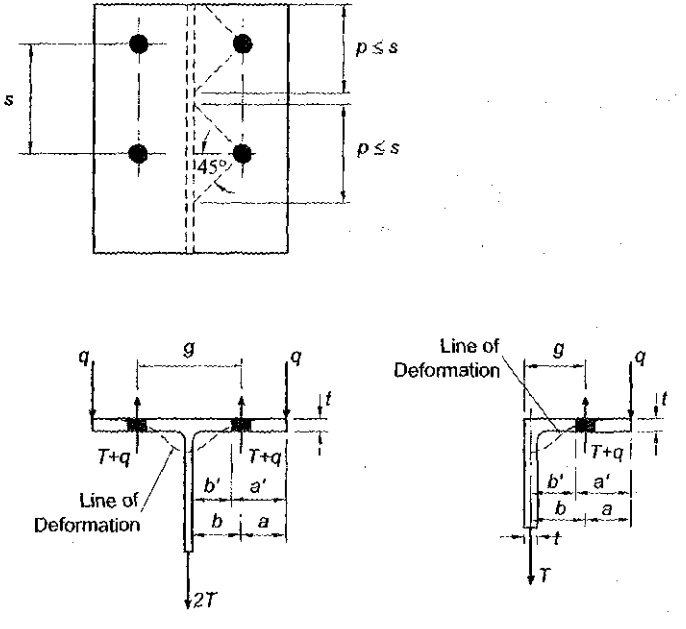

(a) Prying forces in tee *(b) Prying forces in angle*

Fig. 9-4. Illustration of variables in prying action calculations.

than zero. To do so, a preliminary fitting thickness, t, can be selected based upon flexural yielding such that

LRFD	ASD
$T \le \frac{\phi F_u t^2 p}{2b}$ (9-22a)	$T \le \frac{F_u t^2 p}{\Omega 2b}$ (9-22b)
$\phi = 0.90$	$\Omega = 1.67$

Table 15-1 can be used to select the preliminary fitting thickness. Subsequently, the thickness required to ensure an acceptable combination of fitting strength and stiffness and bolt strength, t_{min}, can be determined as

LRFD	ASD
$t_{min} = \sqrt{\frac{4Tb'}{\phi p F_u (1+\delta\alpha')}}$ (9-23a)	$t_{min} = \sqrt{\frac{\Omega 4Tb'}{p F_u (1+\delta\alpha')}}$ (9-23b)
$\phi = 0.90$	$\Omega = 1.67$

where

$$\delta = 1 - \frac{d'}{p} \quad (9\text{-}24)$$

= ratio of the net length at bolt line to gross length at the face of the stem or leg of angle

$\alpha' = 1.0$ if $\beta \ge 1$

= the lesser of 1 and $\frac{1}{\delta}\left(\frac{\beta}{1-\beta}\right)$ if $\beta < 1$

d' = width of the hole along the length of the fitting, in.

$$\beta = \frac{1}{\rho}\left(\frac{B}{T} - 1\right) \quad (9\text{-}25)$$

$$\rho = \frac{b'}{a'} \quad (9\text{-}26)$$

$$a' = \left(a + \frac{d_b}{2}\right) \le \left(1.25b + \frac{d_b}{2}\right) \quad (9\text{-}27)$$

a = distance from the bolt centerline to the edge of the fitting, in.

B = available tension per bolt, ϕr_n or r_n/Ω, kips

If $t_{min} \le t$, the preliminary fitting thickness is satisfactory. Otherwise, a fitting with a thicker flange, or a change in geometry (i.e., b and p) is required.

Although it is not necessary to do so, if desired, the prying force per bolt, q, can be determined as

$$q = B\left[\delta\alpha\rho\left(\frac{t}{t_c}\right)^2\right] \quad (9\text{-}28)$$

$$\alpha = \frac{1}{\delta}\left[\frac{T}{B}\left(\frac{t_c}{t}\right)^2 - 1\right] \text{ where } 0 \le \alpha \le 1.0 \tag{9-29}$$

The parameter α is the ratio of the moment at the face of the tee stem or at the center of the unconnected angle leg thickness, to the moment at the bolt line. When $\alpha = 0$, the connection is strong enough to prevent prying action. When $\alpha > 1$ the connection is not adequate.

LRFD	ASD
$t_c = \sqrt{\frac{4Bb'}{\phi p F_u}}$ (9-30a)	$t_c = \sqrt{\frac{\Omega 4Bb'}{pF_u}}$ (9-30b)

t_c = flange or angle thickness required to develop the available strength of the bolt, B, with no prying action, in.

The total force per bolt including the effects of prying action is then $T + q$.

Alternatively, when the fitting geometry is known, the available tensile strength per bolt, B, determined per AISC *Specification* Sections J3.6 or J3.7, can be multiplied by Q to determine the available tensile strength including the effects of prying action, T_{avail}, as follows:

$$T_{avail} = BQ \tag{9-31}$$

When $\alpha' < 0$, which means that the fitting has sufficient strength and stiffness to develop the full bolt available tensile strength,

$$Q = 1 \tag{9-32}$$

When $0 \le \alpha' \le 1$, which means that the fitting has sufficient strength to develop the full bolt available tensile strength, but insufficient stiffness to prevent prying action,

$$Q = \left(\frac{t}{t_c}\right)^2 (1 + \delta\alpha') \tag{9-33}$$

When $\alpha' > 1$, which means that the fitting has insufficient strength to develop the full bolt available tensile strength,

$$Q = \left(\frac{t}{t_c}\right)^2 (1 + \delta) \tag{9-34}$$

where

$$\alpha' = \frac{1}{\delta(1+\rho)}\left[\left(\frac{t_c}{t}\right)^2 - 1\right] \tag{9-35}$$

= value of α that either maximizes the bolt available tensile strength for a given thickness or minimizes the thickness required for a given bolt available tensile strength

Rotational Ductility

Simple shear connections provide for the rotational ductility required by AISC *Specification* Section J1.2 as follows:

1. For double-angle, shear end-plate, single-angle, and tee shear connections, the geometry and thickness of the connecting elements attached to the support (angle legs, plate, or tee flange) are configured so that flexing of those connecting elements accommodates the simple-beam end rotation.
2. For unstiffened and stiffened seated connections, the geometry and thickness of the top or side stability angle is configured so that flexing of that connecting element accommodates the simple-beam end rotation.
3. For single-plate connections, the geometry and thickness of the plate are configured so that the plate will yield, bolt group will rotate, and/or the bolt holes will elongate at failure prior to the failure of the welds or bolts.

For each of the simple-shear connections in Part 10, except tee shear connections, prescriptive guidance is provided to ensure adequate rotational ductility. Rotational ductility can be ensured for tee shear connections as follows. Note that this approach can also be used to demonstrate adequate rotational ductility in other simple shear connections that flex to accommodate the simple beam end rotation, but with configurations that differ from those prescribed in Part 10.

When the flanges of the tee stub are welded to the support and bolted to the supported beam, weld size, w, with $F_{EXX} = 70$ ksi, must be such that the minimum weld size, w_{min}, is

$$w_{min} = 0.0155\frac{F_y t_f^2}{b}\left(\frac{b^2}{L^2}+2\right) \tag{9-36}$$

but need not exceed $(5/8)t_s$ (Thornton, 1996), where

b = flexible width in connecting element as illustrated in Figure 9-5, in.
t_f = thickness of the tee flange, in.
t_s = thickness of the tee stem, in.
L = depth of connecting element as illustrated in Figure 9-5, in.

For a tee bolted to the support and bolted or welded to the supported beam, the minimum diameter for bolts through the tee flange for ductility is

$$d_{min} = 0.163 t_f \sqrt{\frac{F_y}{b}\left(\frac{b^2}{L^2}+2\right)} \tag{9-37}$$

but need not exceed $0.69\sqrt{t_s}$. Additionally, to provide for rotational ductility when the tee stem is bolted to the supported beam, the maximum tee stem thickness is

$$t_{s\,max} = \frac{d}{2} + {}^1/_{16} \text{ in.} \tag{9-38}$$

where

d = bolt diameter, in.

When the tee stem is welded to the supported beam, there is no perceived ductility problem for this weld.

Concentrated Forces

If the connecting element delivers a concentrated force to a member or other connecting element, see AISC *Specification* Section J10 or Section K1, as appropriate. See also AISC Design Guide 13, *Stiffening of Wide-Flange Columns at Moment Connections: Wind and Seismic Applications* (Carter, 1999).

Shims and Fillers

Shims are furnished to the erector for use in filling the spaces allowed for field clearance which might be present at connections such as simple shear connections, PR and FR moment connections, column base plates, and column splices. These shims, illustrated in Figure 9-6, may be either strip shims, with round punched holes, or finger shims, with slots cut through the edge. Whereas strip shims are less expensive to fabricate, finger shims may be laterally inserted and eliminate the need to remove erection bolts or pins already in place.

Finger shims, when inserted fully against the bolt shank, are acceptable for slip-critical connections and are not to be considered as an internal ply with the slotted hole determining

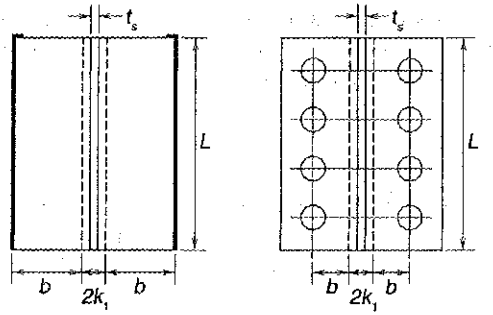

Fig. 9-5. Illustration of variables in shear connection ductility checks.

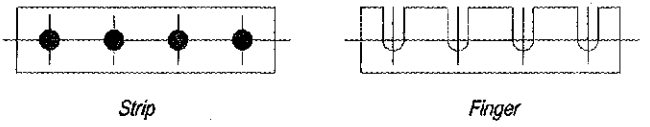

Fig. 9-6. Shims.

the available strength of the connection. This is because less than 25% of the contact surface is lost, which is not enough to affect the performance of the joint.

A filler is furnished to occupy spaces which will be present because of dimensional separations between elements of a connection across which load transfer occurs. Examples where fillers might be used are beams framing off center on a column and raised beams.

For the effect of fillers and shims on available joint strength, see AISC *Specification* Sections J3.8 and J5.2.

Copes, Blocks and Cuts

When structural members frame together, a minimum clearance of ½ in. should be provided, when possible. In cases where material removal is necessary to provide such a clearance, material may be removed by coping, blocking or cutting as illustrated in Figure 9-7.

Material removal is costly and should be avoided when possible. In some cases, it may be possible to do so by setting the elevations of the tops of infill beams a sufficient distance below the tops of girders to clear the girder fillet radius. Alternatively, a connection such as that illustrated in Figure 9-8 could be used.

When material removal is necessary, coping is usually the most economical method to remove material. The recommended practices for coping are illustrated in Figure 9-9. The potential notch left by the first cut will occur in waste material and subsequently be removed by the second cut. All re-entrant corners must be shaped notch-free per AWS D1.1/D1.1M (AWS, 2010) to a radius. An approximate minimum radius to which this corner must be shaped is ½ in. Copes, blocks and cuts can significantly reduce the available strengths of members and may require web reinforcement; it may be more economical to use a heavier member than to provide such reinforcement.

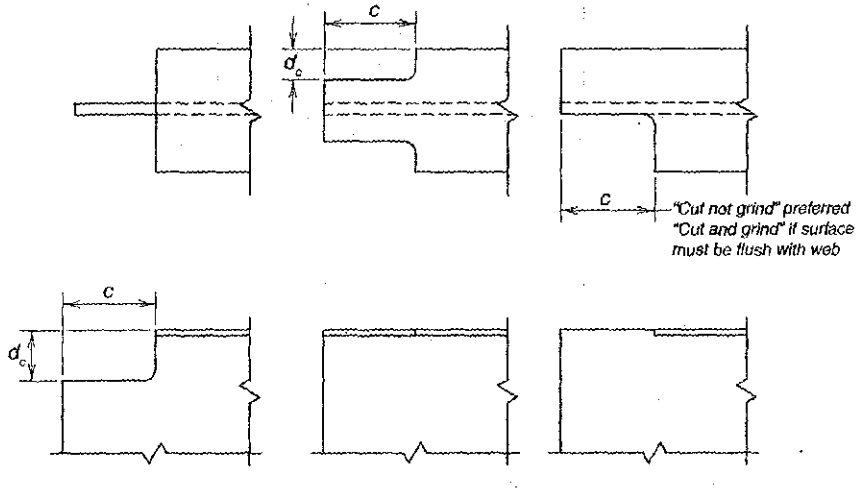

Fig. 9-7. Copes, blocks and cuts.

Web Reinforcement of Coped Beams

When the strength of a coped beam is inadequate, either a different beam with a thicker web can be selected to eliminate the need for reinforcement, or reinforcement can be provided to increase the strength. In spite of the increase in material cost, the former solution may be the most economical option due to the appreciable labor cost associated with adding stiffeners and/or doubler plates. When the latter solution is required, some typical reinforcing details are illustrated in Figure 9-10.

The doubler plate illustrated in Figure 9-10(a) and the longitudinal stiffener illustrated in Figure 9-10b are used with rolled sections where $h/t_w \leq 60$. When a doubler plate is used, the required doubler-plate thickness, $t_{d\ req}$, is determined by substituting the quantity $(t_w + t_{d\ req})$ for t_w in the available strength calculations for flexural yielding and local web buckling. To prevent local crippling of the beam web, the doubler plate must be extended at least a distance d_c (depth of cope) beyond the cope as illustrated in Figure 9-10(a). When longitudinal stiffening is used, the stiffening elements must be proportioned to meet the width-to-thickness ratios specified in AISC *Specification* Table B4.1b. The stiffened cross section must then be checked for flexural yielding, but web local buckling need not be

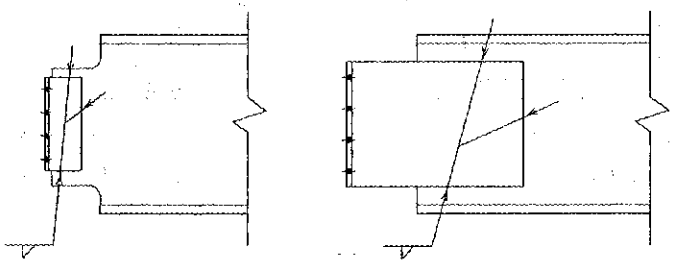

(a) Coping Required *(b) Coping Eliminated*

Fig. 9-8. Eliminating coping requirements.

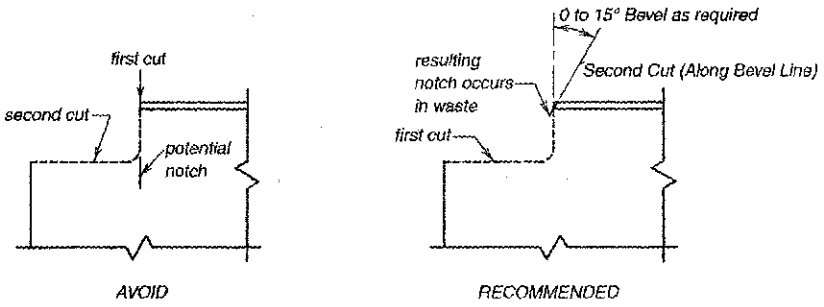

Fig. 9-9. Recommended coping practices.

checked. To prevent local crippling of the beam web, the longitudinal stiffening must be extended a distance d_c beyond the cope as illustrated in Figure 9-10(b).

The combination of longitudinal and transverse stiffeners shown in Figure 9-10(c) may be required for thin-web plate girders, where $h/t_w > 60$. When longitudinal and transverse stiffening is used, the stiffening elements must be proportioned to meet the width-to-thickness ratios specified in AISC *Specification* Table B4.1b. The stiffened cross section must then be checked for flexural yielding, but web local buckling need not be checked. To prevent local crippling of the beam web, longitudinal stiffeners must be extended a distance $c/3$ beyond the cope, as illustrated in Figure 9-10(c).

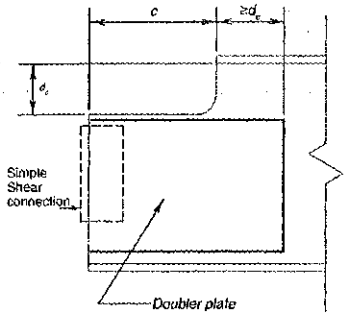

(a) Doubler plate

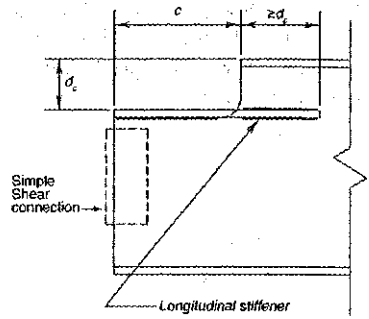

(b) Longitudinal stiffener

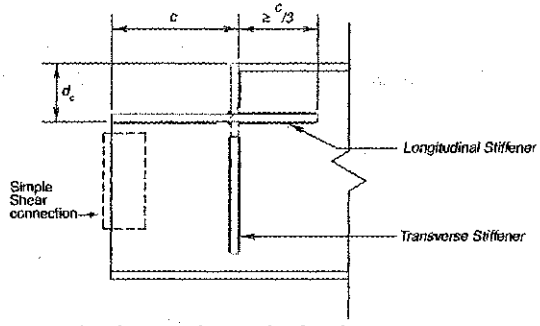

(c) Combination longitudinal and transverse stiffeners

Fig. 9-10. Web reinforcement of coped beams.

DESIGN TABLE DISCUSSION

Table 9-1. Reduction in Area for Hole

Area reduction for standard, oversized, short-slotted and long-slotted holes in material thicknesses from 3/16 in. to 1 in. are given in Table 9-1. For material thicknesses not listed, the tabular value for 1-in. thickness can be multiplied by the actual thickness. The table is based on a net area using a width that is 1/16 in. greater than the actual hole width.

Table 9-2. Elastic Section Modulus for Coped W-Shapes

Values are given for the gross and net elastic section modulus for coped W-shapes, as illustrated in the table header.

Tables 9-3. Block Shear Rupture

The terms in AISC *Specification* Equation J4-5 are tabulated in Tables 9-3a, 9-3b and 9-3c. The indicated values are given per inch of material thickness. Note that when the stress distribution is nonuniform, the tension component from Table 9-3a must be reduced by a factor of 0.5 to account for U_{bs}.

Table 9-4. Beam Bearing Constants

At beam ends and at any location on beams or columns where concentrated loads occur, the available strength for web local yielding and web local crippling, ϕR_n or R_n/Ω, at concentrated loads is determined per AISC *Specification* Sections J10.2 and J10.3. Values of R_n are given for a bearing length, $l_b = 3\frac{1}{4}$ in. The web local yielding (Equations J10-2 and J10-3) and web local crippling (Equations J10-4, J10-5a and J10-5b) equations can be simplified using the bearing length, l_b, and the constants R_1 through R_6 as follows.

$$R_1 = 2.5kF_{yw}t_w \tag{9-39}$$

$$R_2 = F_{yw}t_w \tag{9-40}$$

$$R_3 = 0.40t_w^2\sqrt{\frac{EF_{yw}t_f}{t_w}} \tag{9-41}$$

$$R_4 = 0.40t_w^2\left(\frac{3}{d}\right)\left(\frac{t_w}{t_f}\right)^{1.5}\sqrt{\frac{EF_{yw}t_f}{t_w}} \tag{9-42}$$

$$R_5 = 0.40t_w^2\left(1-0.2\left(\frac{t_w}{t_f}\right)^{1.5}\right)\sqrt{\frac{EF_{yw}t_f}{t_w}} \tag{9-43}$$

$$R_6 = 0.40t_w^2\left(\frac{4}{d}\right)\left(\frac{t_w}{t_f}\right)^{1.5}\sqrt{\frac{EF_{yw}t_f}{t_w}} \tag{9-44}$$

Web Local Yielding

The available strength for web local yielding, ϕR_n or R_n/Ω, is determined per AISC *Specification* Section J10.2 using Equations J10-2 or J10-3, which can be simplified using the constants R_1 and R_2 from Table 9-4 as follows, where $\phi = 1.00$ and $\Omega = 1.50$.

When the compressive force to be resisted is applied at a distance, x, from the member end that is less than or equal to the depth of the member ($x \le d$),

LRFD		ASD	
$\phi R_n = \phi R_1 + l_b(\phi R_2)$	(9-45a)	$R_n/\Omega = R_1/\Omega + l_b(R_2/\Omega)$	(9-45b)

When the compressive force to be resisted is applied at a distance, x, from the member end that is greater than the depth of the member ($x > d$),

LRFD		ASD	
$\phi R_n = 2(\phi R_1) + l_b(\phi R_2)$	(9-46a)	$R_n/\Omega = 2(R_1/\Omega) + l_b(R_2/\Omega)$	(9-46b)

Note that the minimum length of bearing, l_b, is k, per AISC *Specification* Section J10.2 for end beam reactions, where $k = k_{des}$ for W-shapes.

Web Local Crippling

The available strength for web local crippling, ϕR_n or R_n/Ω, is determined per AISC *Specification* Section J10.3 using Equations J10-4, J10-5a or J10-5b, which can be simplified using constants R_3, R_4, R_5 and R_6 from Table 9-4 as follows, where $\phi = 0.75$ and $\Omega = 2.00$.

When the compressive force to be resisted is applied at a distance, x, from the member end that is less than one-half of the depth of the member ($x < d/2$),

For $l_b/d \le 0.2$:

LRFD		ASD	
$\phi R_n = \phi R_3 + l_b(\phi R_4)$	(9-47a)	$R_n/\Omega = R_3/\Omega + l_b(R_4/\Omega)$	(9-47b)

For $l_b/d > 0.2$:

LRFD		ASD	
$\phi R_n = \phi R_5 + l_b(\phi R_6)$	(9-48a)	$R_n/\Omega = R_5/\Omega + l_b(R_6/\Omega)$	(9-48b)

When the compressive force to be resisted is applied at a distance, x, from the member end that is greater than or equal to one-half of the depth of the member ($x \geq d/2$),

LRFD		ASD	
$\phi R_n = 2[(\phi R_3) + l_b(\phi R_4)]$	(9-49a)	$R_n/\Omega = 2[(R_3/\Omega) + l_b(R_4/\Omega)]$	(9-49b)

PART 9 REFERENCES

ACI/ASCE/TMS (2005a), *Building Code Requirements for Masonry Structures*, ACI 530/ASCE 5/TMS 402, Farmington Hills, MI.

ACI/ASCE/TMS (2005b), *Specification for Masonry Structures*, ACI 530.1/ASCE 6/TMS 602, Farmington Hills, MI.

AWS (2010), *Structural Welding Code—Steel*, AWS D1.1/D1.1M, American Welding Society, Miami, FL.

Carter, C.J. (1999), *Stiffening of Wide-Flange Columns at Moment Connections: Wind and Seismic Applications*, Design Guide 13, AISC, Chicago, IL.

Cheng J.J. and Yura, J.A. (1986), "Local Web Buckling of Coped Beams," *Journal of Structural Engineering*, ASCE Vol. 112, No. 10, pp. 2,314–2,331.

Dowswell, R.S. (2011), "A Yield Line Component Method for Bolted Flange Connections," *Engineering Journal*, AISC, Vol. 48, No. 2, 2nd Quarter, Chicago, IL.

Muir, L.S. and Hewitt, C.M. (2009), "Design of Unstiffened Extended Single-Plate Shear Connections," *Engineering Journal*, AISC, Vol. 46, No. 2, 2nd Quarter, pp. 67–79, Chicago, IL.

Swanson, J.A. (2002), "Ultimate Strength Prying Models for Bolted T-Stub Connections," *Engineering Journal*, Vol. 39, No. 3, 3rd Quarter, pp. 136–147, AISC, Chicago, IL.

Thornton, W.A. (1992), "Strength and Serviceability of Hanger Connections," *Engineering Journal*, AISC, Vol. 29, No. 4, 4th Quarter, pp. 145–149, Chicago, IL. See also ERRATA, *Engineering Journal*, Vol. 33, No. 1, 1st Quarter, 1996, pp. 39, 40.

Thornton, W.A. (1996), "Rational Design of Tee Shear Connections," *Engineering Journal*, AISC, Vol. 33, No.1, 1st Quarter, pp. 34–37, Chicago, IL.

Wheeler, A.T., Clarke, M.J., Hancock, G.J. and Murray, T.M. (1998), "Design Model for Bolted Moment End-Plate Connections Joining Rectangular Hollow Sections," *Journal of Structural Engineering*, ASCE, Vol. 124, No. 2.

Whitmore, R.E. (1952), "Experimental Investigation of Stresses in Gusset Plates," *Bulletin No. 16*, Civil Engineering, The University of Tennessee Engineering Experiment Station, Knoxville, TN.

Table 9-1
Reduction in Area for Holes, in.[2]

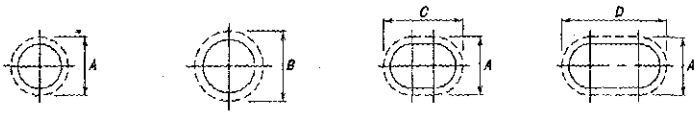

STD *Standard Hole* | *OVS* *Oversized Hole* | *SSL* *Short-Slotted Hole* | *LSL* *Long-Slotted Hole*

Thickness t, in.	$A \times t$ — Bolt Diameter, d, in.							$B \times t$ — Bolt Diameter, d, in.						
	3/4	7/8	1	1 1/8	1 1/4	1 3/8	1 1/2	3/4	7/8	1	1 1/8	1 1/4	1 3/8	1 1/2
3/16	0.164	0.188	0.211	0.234	0.258	0.281	0.305	0.188	0.211	0.246	0.281	0.305	0.328	0.352
1/4	0.219	0.250	0.281	0.313	0.344	0.375	0.406	0.250	0.281	0.328	0.375	0.406	0.438	0.469
5/16	0.273	0.313	0.352	0.391	0.430	0.469	0.508	0.313	0.352	0.410	0.469	0.508	0.547	0.586
3/8	0.328	0.375	0.422	0.469	0.516	0.563	0.609	0.375	0.422	0.492	0.563	0.609	0.656	0.703
7/16	0.383	0.438	0.492	0.547	0.602	0.656	0.711	0.438	0.492	0.574	0.656	0.711	0.766	0.820
1/2	0.438	0.500	0.563	0.625	0.688	0.750	0.813	0.500	0.563	0.656	0.750	0.813	0.875	0.938
9/16	0.492	0.563	0.633	0.703	0.773	0.844	0.914	0.563	0.633	0.738	0.844	0.914	0.984	1.05
5/8	0.547	0.625	0.703	0.781	0.859	0.938	1.02	0.625	0.703	0.820	0.938	1.02	1.09	1.17
11/16	0.602	0.688	0.773	0.859	0.945	1.03	1.12	0.688	0.773	0.902	1.03	1.12	1.20	1.29
3/4	0.656	0.750	0.844	0.938	1.03	1.13	1.22	0.750	0.844	0.984	1.13	1.22	1.31	1.41
13/16	0.711	0.813	0.914	1.02	1.12	1.22	1.32	0.813	0.914	1.07	1.22	1.32	1.42	1.52
7/8	0.766	0.875	0.984	1.09	1.20	1.31	1.42	0.875	0.984	1.15	1.31	1.42	1.53	1.64
15/16	0.820	0.938	1.05	1.17	1.29	1.41	1.52	0.938	1.05	1.23	1.41	1.52	1.64	1.76
1	0.875	1.00	1.13	1.25	1.38	1.50	1.63	1.00	1.13	1.31	1.50	1.63	1.75	1.88

Thickness t, in.	$C \times t$ — Bolt Diameter, d, in.							$D \times t$ — Bolt Diameter, d, in.						
	3/4	7/8	1	1 1/8	1 1/4	1 3/8	1 1/2	3/4	7/8	1	1 1/8	1 1/4	1 3/8	1 1/2
3/16	0.199	0.223	0.258	0.293	0.316	0.340	0.363	0.363	0.422	0.480	0.539	0.598	0.656	0.715
1/4	0.266	0.297	0.344	0.391	0.422	0.453	0.484	0.484	0.563	0.641	0.719	0.797	0.875	0.953
5/16	0.332	0.371	0.430	0.488	0.527	0.566	0.605	0.605	0.703	0.801	0.898	0.996	1.09	1.19
3/8	0.398	0.445	0.516	0.586	0.633	0.680	0.727	0.727	0.844	0.961	1.08	1.20	1.31	1.43
7/16	0.465	0.520	0.602	0.684	0.738	0.793	0.848	0.848	0.984	1.12	1.26	1.39	1.53	1.67
1/2	0.531	0.594	0.688	0.781	0.844	0.906	0.969	0.969	1.13	1.28	1.44	1.59	1.75	1.91
9/16	0.598	0.668	0.773	0.879	0.949	1.02	1.09	1.09	1.27	1.44	1.62	1.79	1.97	2.14
5/8	0.664	0.742	0.859	0.977	1.05	1.13	1.21	1.21	1.41	1.60	1.80	1.99	2.19	2.38
11/16	0.730	0.816	0.945	1.07	1.16	1.25	1.33	1.33	1.55	1.76	1.98	2.19	2.41	2.62
3/4	0.797	0.891	1.03	1.17	1.27	1.36	1.45	1.45	1.69	1.92	2.16	2.39	2.63	2.86
13/16	0.863	0.965	1.12	1.27	1.37	1.47	1.57	1.57	1.83	2.08	2.34	2.59	2.84	3.10
7/8	0.930	1.04	1.20	1.37	1.48	1.59	1.70	1.70	1.97	2.24	2.52	2.79	3.06	3.34
15/16	0.996	1.11	1.29	1.46	1.58	1.70	1.82	1.82	2.11	2.40	2.70	2.99	3.28	3.57
1	1.06	1.19	1.38	1.56	1.69	1.81	1.94	1.94	2.25	2.56	2.88	3.19	3.50	3.81

Table 9-2
Elastic Section Modulus for Coped W-Shapes

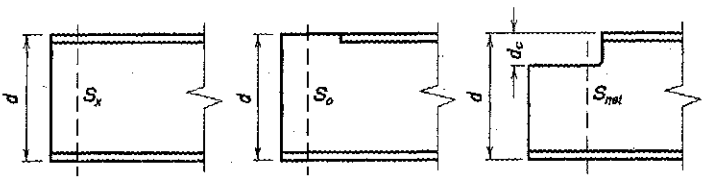

Shape	d, in.	t_f, in.	S_x, in.^{3}	S_o, in.^{3}	S_{net}, in.^{3}								
					d_c, in.								
					2	3	4	5	6	7	8	9	10
W44×335	44.0	1.77	1410	494	453	433	413	394	375	357	339	321	304
×290	43.6	1.58	1240	415	380	363	346	330	314	298	283	268	254
×262	43.3	1.42	1110	372	340	325	310	295	281	267	253	240	227
×230	42.9	1.22	971	330	301	288	274	261	249	236	224	212	200
W40×593	43.0	3.23	2340	810	—	—	671	639	607	575	545	515	486
×503	42.1	2.75	1980	671	—	582	554	527	500	473	448	423	398
×431	41.3	2.36	1690	567	—	491	467	444	421	398	376	355	334
×397	41.0	2.20	1560	512	—	444	422	400	379	359	339	319	300
×372	40.6	2.05	1460	480	—	415	394	374	354	335	316	298	280
×362	40.6	2.01	1420	463	—	400	380	361	342	323	305	287	270
×324	40.2	1.81	1280	408	371	352	335	317	300	284	268	252	237
×297	39.8	1.65	1170	374	339	323	306	290	275	259	245	230	216
×277	39.7	1.58	1100	335	304	289	274	260	246	232	219	206	193
×249	39.4	1.42	993	299	271	258	245	232	219	207	195	183	172
×215	39.0	1.22	859	256	231	220	208	197	186	176	166	156	146
×199	38.7	1.07	770	247	224	213	202	191	180	170	160	150	141
W40×392	41.6	2.52	1440	579	—	503	478	454	431	408	386	364	343
×331	40.8	2.13	1210	483	—	419	398	378	358	339	320	302	284
×327	40.8	2.13	1200	470	—	407	387	367	348	329	311	293	276
×294	40.4	1.93	1080	417	379	360	342	325	308	291	275	259	243
×278	40.2	1.81	1020	397	361	344	326	310	293	277	262	246	232
×264	40.0	1.73	971	371	337	321	305	289	274	259	244	230	216
×235	39.7	1.58	875	320	291	276	262	249	235	222	210	197	185
×211	39.4	1.42	786	286	259	246	234	221	209	198	186	175	165
×183	39.0	1.20	675	243	221	210	199	188	178	168	158	149	140
×167	38.6	1.03	600	234	212	201	191	181	171	161	152	143	134
×149	38.2	0.830	513	217	196	186	177	167	158	149	140	132	123

—Indicates that cope depth is less than flange thickness.

Table 9-2 (continued)
Elastic Section Modulus for Coped W-Shapes

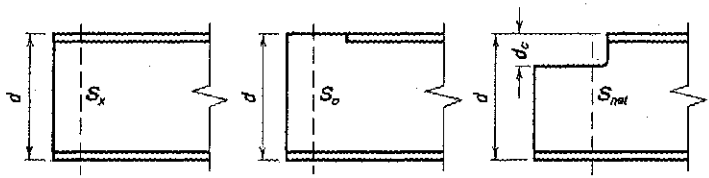

Shape	d, in.	t_f, in.	S_x, in.^{3}	S_o, in.^{3}	S_{net}, in.^{3}								
					d_c, in.								
					2	3	4	5	6	7	8	9	10
W36×652	41.1	3.54	2460	816	—	—	669	635	601	568	536	505	475
×529	39.8	2.91	1990	636	—	547	519	491	464	438	413	388	364
×487	39.3	2.68	1830	581	—	499	473	448	423	399	375	352	330
×441	38.9	2.44	1650	518	—	444	420	398	375	354	332	312	292
×395	38.4	2.20	1490	457	—	391	370	350	330	311	292	274	256
×361	38.0	2.01	1350	412	—	352	333	315	297	279	262	246	230
×330	37.7	1.85	1240	371	335	317	300	283	267	251	235	220	206
×302	37.3	1.68	1130	338	305	289	273	258	243	228	214	200	187
×282	37.1	1.57	1050	314	283	268	253	239	225	211	198	185	173
×262	36.9	1.44	972	294	264	250	236	223	210	197	185	172	161
×247	36.7	1.35	913	277	249	236	223	210	198	185	174	162	151
×231	36.5	1.26	854	260	234	222	209	197	186	174	163	152	142
W36×256	37.4	1.73	895	329	297	281	266	251	237	223	209	196	183
×232	37.1	1.57	809	295	266	251	238	224	211	199	186	174	163
×210	36.7	1.36	719	272	245	232	219	207	195	183	172	161	150
×194	36.5	1.26	664	249	224	212	201	189	178	167	157	146	137
×182	36.3	1.18	623	234	211	199	188	178	167	157	147	137	128
×170	36.2	1.10	581	218	196	185	175	165	155	146	137	128	119
×160	36.0	1.02	542	206	185	175	165	156	147	138	129	120	112
×150	35.9	0.940	504	195	176	166	157	148	139	130	122	114	106
×135	35.6	0.790	439	181	163	154	145	137	129	121	113	105	98.1
W33×387	36.0	2.28	1350	413	—	349	329	310	291	272	254	237	220
×354	35.6	2.09	1240	373	—	315	297	279	262	245	229	213	198
×318	35.2	1.89	1110	330	295	278	262	246	230	216	201	187	173
×291	34.8	1.73	1020	300	268	253	238	223	209	195	182	169	157
×263	34.5	1.57	919	268	239	226	212	199	186	174	162	151	139
×241	34.2	1.40	831	250	223	210	197	185	173	162	150	140	129
×221	33.9	1.28	759	230	205	193	181	170	159	148	138	128	118
×201	33.7	1.15	686	209	186	175	165	154	144	135	125	116	107

—Indicates that cope depth is less than flange thickness.

Table 9-2 (continued)
Elastic Section Modulus for Coped W-Shapes

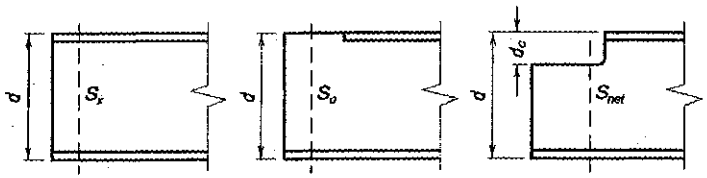

Shape	d, in.	t_f, in.	S_x, in.^{3}	S_o, in.^{3}	S_{net}, in.^{3}								
					d_c, in.								
					2	3	4	5	6	7	8	9	10
W33×169	33.8	1.22	549	191	170	161	151	141	132	124	115	107	98.6
×152	33.5	1.06	487	176	157	148	139	130	122	114	106	97.9	90.5
×141	33.3	0.960	448	165	147	139	130	122	114	106	98.8	91.6	84.6
×130	33.1	0.855	406	155	138	130	122	114	107	99.6	92.5	85.7	79.2
×118	32.9	0.740	359	143	128	120	113	106	98.6	91.9	85.4	79.1	73.0
W30×391	33.2	2.44	1250	378	—	315	295	276	257	239	222	205	188
×357	32.8	2.24	1140	339	—	282	264	246	230	213	197	182	167
×326	32.4	2.05	1040	305	—	254	237	221	206	191	177	163	150
×292	32.0	1.85	930	269	238	223	208	194	180	167	155	142	130
×261	31.6	1.65	829	240	212	198	185	172	160	148	137	126	115
×235	31.3	1.50	748	211	186	174	163	152	141	130	120	110	101
×211	30.9	1.32	665	192	170	159	148	138	128	118	109	99.8	91.2
×191	30.7	1.19	600	174	153	143	133	124	115	106	97.7	89.6	81.8
×173	30.4	1.07	541	158	139	130	121	112	104	96.1	88.4	81.0	73.9
W30×148	30.7	1.18	436	152	134	125	117	109	101	93.3	86.0	78.9	72.1
×132	30.3	1.00	380	139	123	115	107	99.3	92.1	85.1	78.3	71.8	65.5
×124	30.2	0.930	355	131	115	108	100	93.4	86.5	79.9	73.6	67.4	61.5
×116	30.0	0.850	329	124	109	102	95.3	88.6	82.1	75.8	69.7	63.9	58.2
×108	29.8	0.760	299	118	103	96.5	89.9	83.6	77.4	71.4	65.7	60.1	54.8
×99	29.7	0.670	269	110	96.4	90.0	83.9	77.9	72.1	66.5	61.1	56.0	51.0
×90	29.5	0.610	245	98.7	86.7	80.9	75.4	70.0	64.8	59.7	54.9	50.2	45.7
W27×539	32.5	3.54	1570	509	—	—	394	367	341	316	292	269	247
×368	30.4	2.48	1060	321	—	262	244	226	209	193	177	162	147
×336	30.0	2.28	972	287	—	234	218	202	186	172	157	143	130
×307	29.6	2.09	887	259	—	211	196	181	167	154	141	128	116
×281	29.3	1.93	814	233	203	189	176	162	150	137	126	114	104
×258	29.0	1.77	745	212	185	172	159	147	136	124	114	103	93.3
×235	28.7	1.61	677	193	168	156	145	134	123	113	103	93.2	84.2
×217	28.4	1.50	627	174	152	141	130	120	111	101	92.3	83.7	75.5
×194	28.1	1.34	559	155	134	125	115	106	97.6	89.3	81.3	73.6	66.3
×178	27.8	1.19	505	145	126	117	108	99.7	91.5	83.6	76.1	68.8	61.9
×161	27.6	1.08	458	131	113	105	97.2	89.5	82.0	74.9	68.1	61.5	55.3
×146	27.4	0.975	414	118	102	95.0	87.7	80.7	74.0	67.5	61.3	55.3	49.7

—Indicates that cope depth is less than flange thickness.

Table 9-2 (continued)
Elastic Section Modulus for Coped W-Shapes

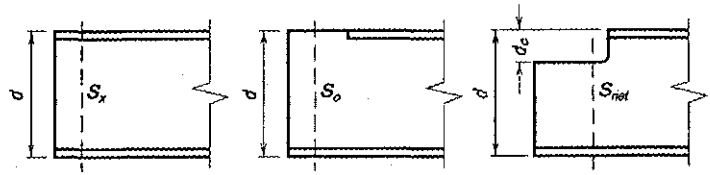

Shape	d, in.	t_f, in.	S_x, in.^{3}	S_o, in.^{3}	S_{net}, in.^{3} d_c, in. 2	3	4	5	6	7	8	9	10
W27×129	27.6	1.10	345	117	101	94.0	86.9	80.1	73.5	67.2	61.1	55.3	49.7
×114	27.3	0.930	299	106	91.6	84.9	78.4	72.2	66.2	60.5	54.9	49.6	44.6
×102	27.1	0.830	267	94.2	81.6	75.6	69.8	64.2	58.9	53.7	48.8	44.0	39.5
×94	26.9	0.745	243	88.0	76.2	70.6	65.1	59.9	54.9	50.1	45.4	41.0	36.8
×84	26.7	0.640	213	80.5	69.7	64.5	59.5	54.7	50.1	45.7	41.4	37.4	33.5
W24×370	28.0	2.72	957	295	—	237	219	201	184	168	153	138	124
×335	27.5	2.48	864	261	—	209	193	177	162	147	133	120	108
×306	27.1	2.28	789	234	—	186	172	157	144	131	118	106	94.9
×279	26.7	2.09	718	210	—	167	154	141	128	116	105	94.3	84.0
×250	26.3	1.89	644	184	158	146	134	123	112	101	91.2	81.7	72.6
×229	26.0	1.73	588	167	143	132	121	111	101	91.0	81.8	73.1	64.9
×207	25.7	1.57	531	149	127	117	107	98.0	89.0	80.4	72.2	64.4	57.0
×192	25.5	1.46	491	136	117	107	98.2	89.5	81.2	73.3	65.8	58.6	51.8
×176	25.2	1.34	450	124	106	97.6	89.4	81.4	73.8	66.5	59.6	53.0	46.8
×162	25.0	1.22	414	115	98.0	90.0	82.3	74.9	67.9	61.1	54.7	48.6	42.8
×146	24.7	1.09	371	104	88.5	81.2	74.2	67.5	61.1	54.9	49.1	43.6	38.3
×131	24.5	0.960	329	94.4	80.3	73.7	67.3	61.1	55.3	49.7	44.3	39.3	34.5
×117	24.3	0.850	291	84.4	71.7	65.7	60.0	54.5	49.2	44.2	39.4	34.8	30.5
×104	24.1	0.750	258	75.4	64.1	58.7	53.5	48.6	43.8	39.3	35.0	30.9	27.1
W24×103	24.5	0.980	245	82.9	70.7	64.9	59.3	53.9	48.8	43.9	39.2	34.8	30.6
×94	24.3	0.875	222	76.2	64.9	59.5	54.3	49.4	44.6	40.1	35.8	31.7	27.9
×84	24.1	0.770	196	68.3	58.0	53.2	48.6	44.1	39.8	35.8	31.9	28.2	24.8
×76	23.9	0.680	176	62.6	53.2	48.7	44.5	40.4	36.4	32.7	29.1	25.8	22.6
×68	23.7	0.585	154	57.5	48.8	44.7	40.8	37.0	33.4	29.9	26.6	23.5	20.6
W24×62	23.7	0.590	131	56.9	48.3	44.3	40.4	36.7	33.1	29.7	26.5	23.4	20.5
×55	23.6	0.505	114	51.1	43.4	39.7	36.2	32.9	29.7	26.6	23.7	20.9	18.3
W21×201	23.0	1.63	461	125	105	95.2	86.2	77.6	69.4	61.6	54.2	47.3	40.8
×182	22.7	1.48	417	111	93.3	84.8	76.6	68.8	61.4	54.4	47.8	41.6	35.8
×166	22.5	1.36	380	99.3	83.0	75.3	68.0	61.0	54.4	48.1	42.2	36.6	31.4
×147	22.1	1.15	329	91.2	76.1	68.9	62.1	55.7	49.5	43.7	38.2	33.1	28.2
×132	21.8	1.04	295	81.0	67.5	61.1	55.0	49.2	43.7	38.5	33.6	29.0	24.7
×122	21.7	0.960	273	74.1	61.6	55.7	50.2	44.8	39.8	35.0	30.5	26.3	22.4
×111	21.5	0.875	249	67.1	55.7	50.4	45.3	40.4	35.9	31.5	27.4	23.6	20.1
×101	21.4	0.800	227	60.4	50.1	45.3	40.7	36.3	32.1	28.2	24.5	21.1	17.9

—Indicates that cope depth is less than flange thickness.

Table 9-2 (continued)
Elastic Section Modulus for Coped W-Shapes

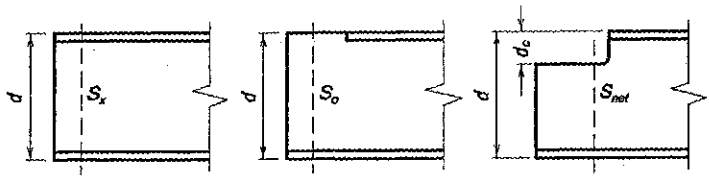

Shape	d, in.	t_f, in.	S_x, in.^{3}	S_o, in.^{3}	S_{net}, in.^{3} d_c, in. 2	3	4	5	6	7	8	9	10
W21×93	21.6	0.930	192	67.2	56.0	50.7	45.7	40.9	36.3	32.0	27.9	24.1	20.5
×83	21.4	0.835	171	59.0	49.1	44.4	40.0	35.7	31.7	27.9	24.3	20.9	17.8
×73	21.2	0.740	151	51.5	42.7	38.7	34.8	31.0	27.5	24.2	21.0	18.1	15.3
×68	21.1	0.685	140	48.1	39.9	36.1	32.4	29.0	25.6	22.5	19.6	16.8	14.2
×62	21.0	0.615	127	44.1	36.5	33.0	29.7	26.5	23.4	20.5	17.8	15.3	12.9
×55	20.8	0.522	110	40.1	33.2	30.0	26.9	24.0	21.2	18.6	16.1	13.8	11.7
×48	20.6	0.430	93.0	36.2	30.0	27.0	24.2	21.6	19.1	16.7	14.5	12.4	10.4
W21×57	21.1	0.650	111	43.4	36.1	32.6	29.3	26.2	23.2	20.4	17.7	15.2	12.9
×50	20.8	0.535	94.5	39.2	32.5	29.4	26.4	23.6	20.8	18.3	15.9	13.6	11.5
×44	20.7	0.450	81.6	35.2	29.1	26.3	23.6	21.0	18.6	16.3	14.1	12.1	10.2
W18×311	22.3	2.74	624	186	—	140	126	113	100	88.2	77.0	66.5	56.8
×283	21.9	2.50	565	166	—	124	111	99.3	87.8	77.1	67.0	57.6	48.9
×258	21.5	2.30	514	148	—	110	98.3	87.4	77.2	67.5	58.5	50.0	42.3
×234	21.1	2.11	466	130	—	96.1	85.9	76.2	67.1	58.5	50.4	43.0	36.1
×211	20.7	1.91	419	115	94.5	84.8	75.6	66.9	58.7	51.0	43.8	37.1	31.0
×192	20.4	1.75	380	102	83.4	74.7	66.5	58.7	51.4	44.5	38.1	32.1	26.7
×175	20.0	1.59	344	92.1	75.1	67.2	59.7	52.6	45.9	39.6	33.8	28.4	23.5
×158	19.7	1.44	310	81.7	66.4	59.3	52.6	46.2	40.2	34.6	29.4	24.6	
×143	19.5	1.32	282	72.5	58.8	52.4	46.4	40.7	35.4	30.4	25.7	21.5	
×130	19.3	1.20	256	65.2	52.8	47.0	41.5	36.4	31.5	27.0	22.8	19.0	
×119	19.0	1.06	231	61.7	49.8	44.3	39.1	34.2	29.5	25.2	21.2	17.6	
×106	18.7	0.940	204	54.4	43.8	38.9	34.3	29.9	25.8	22.0	18.5	15.2	
×97	18.6	0.870	188	48.9	39.3	34.9	30.7	26.8	23.1	19.6	16.4	13.5	
×86	18.4	0.770	166	43.1	34.6	30.6	26.9	23.4	20.2	17.1	14.3	11.7	
×76	18.2	0.680	146	37.6	30.1	26.7	23.4	20.3	17.5	14.8	12.3	10.1	
W18×71	18.5	0.810	127	42.4	34.1	30.3	26.7	23.3	20.1	17.1	14.3	11.8	
×65	18.4	0.750	117	38.3	30.8	27.3	24.0	20.9	18.0	15.3	12.8	10.5	
×60	18.2	0.695	108	35.0	28.1	24.9	21.9	19.1	16.4	13.9	11.6	9.53	
×55	18.1	0.630	98.3	32.4	26.0	23.0	20.2	17.6	15.1	12.8	10.7	8.72	
×50	18.0	0.570	88.9	29.1	23.4	20.7	18.2	15.8	13.5	11.5	9.54		
W18×46	18.1	0.605	78.8	28.9	23.2	20.6	18.1	15.7	13.5	11.5	9.56	7.81	
×40	17.9	0.525	68.4	24.9	20.0	17.7	15.5	13.5	11.6	9.80	8.16		
×35	17.7	0.425	57.6	22.7	18.2	16.1	14.1	12.3	10.5	8.88	7.37		

—Indicates that cope depth is less than flange thickness.
Note: Values are omitted when cope depth exceeds $d/2$.

Table 9-2 (continued)
Elastic Section Modulus for Coped W-Shapes

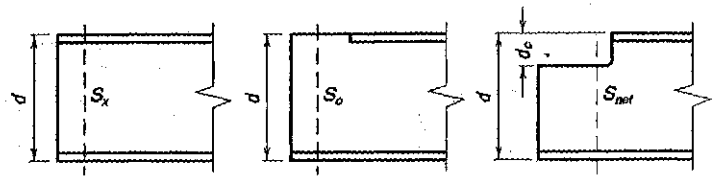

Shape	d, in.	t_f, in.	S_x, in.^{3}	S_o, in.^{3}	S_{net}, in.^{3} d_c, in.								
					2	3	4	5	6	7	8	9	10
W16×100	17.0	0.985	175	44.4	34.9	30.5	26.4	22.6	19.0	15.7	12.8		
×89	16.8	0.875	155	39.0	30.6	26.7	23.1	19.7	16.5	13.6	11.0		
×77	16.5	0.760	134	33.1	25.9	22.6	19.4	16.5	13.8	11.4	9.13		
×67	16.3	0.665	117	28.3	22.1	19.2	16.5	14.0	11.7	9.58	7.66		
W16×57	16.4	0.715	92.2	29.4	23.0	20.1	17.3	14.8	12.4	10.2	8.17		
×50	16.3	0.630	81.0	25.6	20.0	17.4	15.0	12.7	10.7	8.74	6.99		
×45	16.1	0.565	72.7	22.9	17.9	15.5	13.4	11.3	9.47	7.75	6.19		
×40	16.0	0.505	64.7	20.1	15.6	13.6	11.7	9.89	8.24	6.73	5.35		
×36	15.9	0.430	56.5	18.8	14.6	12.7	10.9	9.21	7.67	6.25			
W16×31	15.9	0.440	47.2	17.1	13.3	11.6	9.96	8.44	7.03	5.73			
×26	15.7	0.345	38.4	14.9	11.6	10.1	8.64	7.31	6.08	4.95			
W14×730	22.4	4.91	1280	365	—	—	—	220	195	172	151	132	114
×665	21.6	4.52	1150	317	—	—	—	187	165	144	126	109	93.3
×605	20.9	4.16	1040	275	—	—	—	158	139	121	105	89.6	76.2
×550	20.2	3.82	931	238	—	—	153	134	117	101	86.9	73.8	62.1
×500	19.6	3.50	838	208	—	—	131	115	99.4	85.3	72.5	60.9	
×455	19.0	3.21	756	182	—	—	113	98.2	84.6	72.1	60.7	50.6	
×426	18.7	3.04	706	164	—	—	101	87.6	75.2	63.8	53.4	44.2	
×398	18.3	2.85	656	150	—	104	91.1	78.7	67.2	56.7	47.2	38.7	
×370	17.9	2.66	607	135	—	93.7	81.4	70.1	59.6	50.0	41.3		
×342	17.5	2.47	558	122	—	83.4	72.3	61.9	52.3	43.6	35.8		
×311	17.1	2.26	506	107	—	72.7	62.7	53.5	44.9	37.2	30.2		
×283	16.7	2.07	459	94.4	—	63.6	54.6	46.3	38.7	31.8	25.6		
×257	16.4	1.89	415	83.1	64.1	55.5	47.4	40.0	33.3	27.1	21.6		
×233	16.0	1.72	375	73.2	56.1	48.4	41.3	34.6	28.6	23.2	18.3		
×211	15.7	1.56	338	64.9	49.5	42.6	36.1	30.2	24.8	19.9			
×193	15.5	1.44	310	57.6	43.8	37.5	31.7	26.4	21.6	17.3			
×176	15.2	1.31	281	52.2	39.5	33.8	28.5	23.6	19.2	15.2			
×159	15.0	1.19	254	45.7	34.5	29.4	24.7	20.4	16.5	13.0			
×145	14.8	1.09	232	40.9	30.7	26.1	21.9	18.0	14.5	11.4			

—Indicates that cope depth is less than flange thickness.
Note: Values are omitted when cope depth exceeds $d/2$.

Table 9-2 (continued)
Elastic Section Modulus for Coped W-Shapes

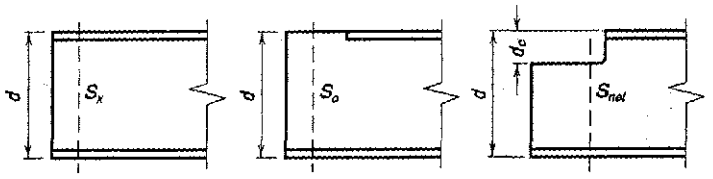

Shape	d, in.	t_f, in.	S_x, in.^{3}	S_o, in.^{3}	S_{net}, in.^{3} at d_c, in.								
					2	3	4	5	6	7	8	9	10
W14×132	14.7	1.03	209	38.1	28.6	24.3	20.3	16.7	13.4	10.5			
×120	14.5	0.940	190	34.2	25.5	21.7	18.1	14.8	11.8	9.20			
×109	14.3	0.860	173	30.0	22.3	18.9	15.7	12.8	10.2	7.91			
×99	14.2	0.780	157	27.2	20.2	17.0	14.2	11.5	9.15	7.04			
×90	14.0	0.710	143	24.3	18.0	15.2	12.6	10.2	8.07	6.18			
W14×82	14.3	0.855	123	28.0	20.9	17.7	14.8	12.1	9.64	7.46			
×74	14.2	0.785	112	24.4	18.2	15.4	12.8	10.4	8.31	6.40			
×68	14.0	0.720	103	22.2	16.5	13.9	11.6	9.41	7.46	5.72			
×61	13.9	0.645	92.1	19.7	14.6	12.3	10.2	8.28	6.54				
W14×53	13.9	0.660	77.8	19.1	14.2	12.0	9.93	8.07	6.39				
×48	13.8	0.595	70.2	17.3	12.8	10.8	8.93	7.23	5.71				
×43	13.7	0.530	62.6	15.3	11.3	9.49	7.84	6.34	4.99				
W14×38	14.1	0.515	54.6	16.0	12.0	10.2	8.48	6.94	5.54	4.28			
×34	14.0	0.455	48.6	14.4	10.8	9.14	7.62	6.22	4.95				
×30	13.8	0.385	42.0	13.2	9.88	8.37	6.96	5.68	4.51				
W14×26	13.9	0.420	35.3	12.3	9.20	7.80	6.50	5.31	4.23				
×22	13.7	0.335	29.0	10.7	7.97	6.75	5.62	4.58	3.64				
W12×336	16.8	2.96	483	123	—	83.1	71.4	60.6	50.8	41.9	34.1		
×305	16.3	2.71	435	108	—	71.4	61.0	51.4	42.7	34.9	28.0		
×279	15.9	2.47	393	96.1	—	63.1	53.5	44.8	36.9	29.8			
×252	15.4	2.25	353	83.7	—	54.2	45.7	38.0	31.0	24.8			
×230	15.1	2.07	321	74.2	—	47.5	39.9	32.9	26.7	21.1			
×210	14.7	1.90	292	65.6	49.0	41.6	34.7	28.5	22.9	17.9			
×190	14.4	1.74	263	57.0	42.3	35.7	29.7	24.2	19.3	14.9			
×170	14.0	1.56	235	49.6	36.5	30.7	25.3	20.5	16.2	12.4			
×152	13.7	1.40	209	43.3	31.6	26.5	21.7	17.5	13.7				
×136	13.4	1.25	186	37.9	27.5	22.9	18.7	14.9	11.6				
×120	13.1	1.11	163	32.8	23.7	19.7	16.0	12.6	9.70				
×106	12.9	0.990	145	27.6	19.8	16.3	13.2	10.4	7.91				
×96	12.7	0.900	131	24.3	17.4	14.3	11.5	9.03	6.83				
×87	12.5	0.810	118	22.2	15.8	13.0	10.4	8.11	6.09				
×79	12.4	0.735	107	19.9	14.1	11.5	9.23	7.16	5.35				
×72	12.3	0.670	97.4	17.9	12.6	10.3	8.24	6.37	4.73				
×65	12.1	0.605	87.9	16.0	11.2	9.16	7.28	5.61	4.14				

—Indicates that cope depth is less than flange thickness.
Note: Values are omitted when cope depth exceeds $d/2$.

Table 9-2 (continued)
Elastic Section Modulus for Coped W-Shapes

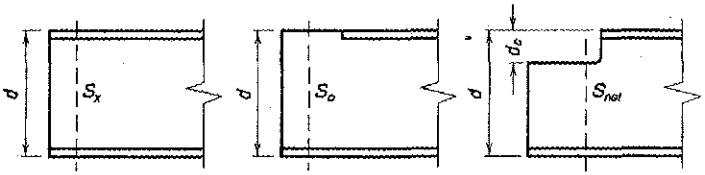

Shape	d, in.	t_f, in.	S_x, in.^{3}	S_o, in.^{3}	S_{net}, in.^{3} d_c, in.								
					2	3	4	5	6	7	8	9	10
W12×58	12.2	0.640	78.0	14.8	10.4	8.52	6.79	5.24	3.88				
×53	12.1	0.575	70.6	13.9	9.75	7.94	6.31	4.85	3.58				
W12×50	12.2	0.640	64.2	14.8	10.4	8.54	6.82	5.27	3.91				
×45	12.1	0.575	57.7	13.1	9.27	7.56	6.02	4.63	3.42				
×40	11.9	0.515	51.5	11.4	8.03	6.54	5.19	3.98					
W12×35	12.5	0.520	45.6	12.3	8.85	7.30	5.89	4.61	3.48				
×30	12.3	0.440	38.6	10.5	7.47	6.15	4.94	3.86	2.90				
×26	12.2	0.380	33.4	9.08	6.47	5.32	4.27	3.32	2.48				
W12×22	12.3	0.425	25.4	9.60	6.89	5.69	4.59	3.59	2.71				
×19	12.2	0.350	21.3	8.39	6.01	4.95	3.98	3.11	2.33				
×16	12.0	0.265	17.1	7.43	5.30	4.36	3.50	2.72					
×14	11.9	0.225	14.9	6.61	4.71	3.86	3.10	2.41					
W10×112	11.4	1.25	126	25.7	17.5	13.9	10.8	8.02					
×100	11.1	1.12	112	22.3	15.0	11.9	9.12	6.72					
×88	10.8	0.990	98.5	19.1	12.8	10.0	7.62	5.54					
×77	10.6	0.870	85.9	16.2	10.7	8.35	6.29	4.52					
×68	10.4	0.770	75.7	13.9	9.13	7.10	5.30	3.77					
×60	10.2	0.680	66.7	12.1	7.88	6.09	4.52	3.18					
×54	10.1	0.615	60.0	10.5	6.78	5.22	3.85	2.69					
×49	10.0	0.560	54.6	9.49	6.13	4.71	3.46	2.40					
W10×45	10.1	0.620	49.1	9.75	6.33	4.88	3.61	2.52					
×39	9.92	0.530	42.1	8.49	5.48	4.20	3.08						
×33	9.73	0.435	35.0	7.49	4.80	3.67	2.67						
W10×30	10.5	0.510	32.4	8.64	5.75	4.51	3.41	2.45					
×26	10.3	0.440	27.9	7.33	4.86	3.80	2.85	2.04					
×22	10.2	0.360	23.2	6.51	4.29	3.34	2.50	1.77					
W10×19	10.2	0.395	18.8	6.52	4.33	3.39	2.55	1.82					
×17	10.1	0.330	16.2	6.01	3.98	3.10	2.33	1.65					
×15	9.99	0.270	13.8	5.53	3.65	2.84	2.12	1.50					
×12	9.87	0.210	10.9	4.43	2.91	2.26	1.68						

Note: Values are omitted when cope depth exceeds $d/2$.

Table 9-2 (continued)
Elastic Section Modulus for Coped W-Shapes

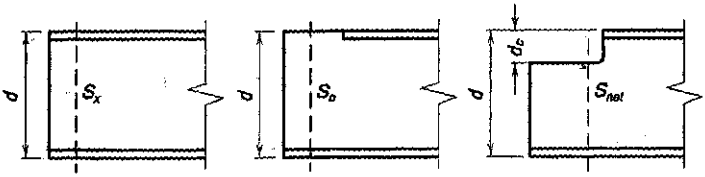

Shape	d, in.	t_f, in.	S_x, in.^{3}	S_o, in.^{3}	S_{net}, in.^{3}								
					d_c, in.								
					2	3	4	5	6	7	8	9	10
W8×67	9.00	0.935	60.4	12.2	7.42	5.44	3.77						
×58	8.75	0.810	52.0	10.4	6.24	4.52	3.08						
×48	8.50	0.685	43.2	7.89	4.63	3.32	2.21						
×40	8.25	0.560	35.5	6.71	3.89	2.74	1.80						
×35	8.12	0.495	31.2	5.66	3.24	2.28	1.47						
×31	8.00	0.435	27.5	5.06	2.88	2.01	1.28						
W8×28	8.06	0.465	24.3	5.04	2.89	2.02	1.30						
×24	7.93	0.400	20.9	4.23	2.40	1.67							
W8×21	8.28	0.400	18.2	4.55	2.67	1.91	1.26						
×18	8.14	0.330	15.2	4.02	2.35	1.66	1.09						
W8×15	8.11	0.315	11.8	4.03	2.36	1.68	1.10						
×13	7.99	0.255	9.91	3.61	2.10	1.49							
×10	7.89	0.205	7.81	2.65	1.54	1.08							

Note: Values are omitted when cope depth exceeds $d/2$.

Table 9-3a
Block Shear Tension Rupture Component
per inch of thickness, kips/in.

U_{bs} = 1.0

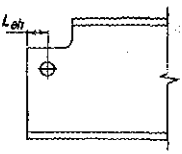

F_u	58 ksi					
	Bolt diameter, d, in.					
	3/4		7/8		1	
L_{eh}, in.	$\frac{F_uA_{nt}}{\Omega}$	$\frac{\phi F_uA_{nt}}{t}$	$\frac{F_uA_{nt}}{\Omega}$	$\frac{\phi F_uA_{nt}}{t}$	$\frac{F_uA_{nt}}{\Omega}$	$\frac{\phi F_uA_{nt}}{t}$
	ASD	LRFD	ASD	LRFD	ASD	LRFD
1	16.3	24.5	14.5	21.8	12.7	19.0
1 1/8	19.9	29.9	18.1	27.2	16.3	24.5
1 1/4	23.6	35.3	21.8	32.6	19.9	29.9
1 3/8	27.2	40.8	25.4	38.1	23.6	35.3
1 1/2	30.8	46.2	29.0	43.5	27.2	40.8
1 5/8	34.4	51.7	32.6	48.9	30.8	46.2
1 3/4	38.1	57.1	36.3	54.4	34.4	51.7
1 7/8	41.7	62.5	39.9	59.8	38.1	57.1
2	45.3	68.0	43.5	65.3	41.7	62.5
2 1/4	52.6	78.8	50.7	76.1	48.9	73.4
2 1/2	59.8	89.7	58.0	87.0	56.2	84.3
2 3/4	67.1	101	65.3	97.9	63.4	95.2
3	74.3	111	72.5	109	70.7	106

F_u	65 ksi					
	Bolt diameter, d, in.					
	3/4		7/8		1	
L_{eh}, in.	$\frac{F_uA_{nt}}{\Omega}$	$\frac{\phi F_uA_{nt}}{t}$	$\frac{F_uA_{nt}}{\Omega}$	$\frac{\phi F_uA_{nt}}{t}$	$\frac{F_uA_{nt}}{\Omega}$	$\frac{\phi F_uA_{nt}}{t}$
	ASD	LRFD	ASD	LRFD	ASD	LRFD
1	18.3	27.4	16.3	24.4	14.2	21.3
1 1/8	22.3	33.5	20.3	30.5	18.3	27.4
1 1/4	26.4	39.6	24.4	36.6	22.3	33.5
1 3/8	30.5	45.7	28.4	42.7	26.4	39.6
1 1/2	34.5	51.8	32.5	48.8	30.5	45.7
1 5/8	38.6	57.9	36.6	54.8	34.5	51.8
1 3/4	42.7	64.0	40.6	60.9	38.6	57.9
1 7/8	46.7	70.1	44.7	67.0	42.7	64.0
2	50.8	76.2	48.8	73.1	46.7	70.1
2 1/4	58.9	88.4	56.9	85.3	54.8	82.3
2 1/2	67.0	101	65.0	97.5	63.0	94.5
2 3/4	75.2	113	73.1	110	71.1	107
3	83.3	125	81.3	122	79.2	119

ASD	LRFD
Ω = 2.00	ϕ = 0.75

Table 9-3b
Block Shear
Shear Yielding
Component
per inch of thickness, kips/in.

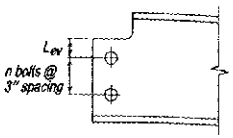

L_{ev}, in.	n	F_y, ksi: 36		50		n	F_y, ksi: 36		50	
		$\frac{0.6F_yA_{gv}}{t\Omega}$	$\frac{\phi 0.6F_yA_{gv}}{t}$	$\frac{0.6F_yA_{gv}}{t\Omega}$	$\frac{\phi 0.6F_yA_{gv}}{t}$		$\frac{0.6F_yA_{gv}}{t\Omega}$	$\frac{\phi 0.6F_yA_{gv}}{t}$	$\frac{0.6F_yA_{gv}}{t\Omega}$	$\frac{\phi 0.6F_yA_{gv}}{t}$
		ASD	LRFD	ASD	LRFD		ASD	LRFD	ASD	LRFD
1¼		370	555	514	771		273	409	379	568
1⅜		371	557	516	773		274	411	381	571
1½		373	559	518	776		275	413	383	574
1⅝		374	561	519	779		277	415	384	577
1¾		375	563	521	782		278	417	386	579
1⅞	12	377	565	523	785	9	279	419	388	582
2		378	567	525	788		281	421	390	585
2¼		381	571	529	793		284	425	394	591
2½		383	575	533	799		286	429	398	596
2¾		386	579	536	804		289	433	401	602
3		389	583	540	810		292	437	405	608
1¼		337	506	469	703		240	360	334	501
1⅜		339	508	471	706		242	362	336	503
1½		340	510	473	709		243	364	338	506
1⅝		342	512	474	712		244	367	339	509
1¾		343	514	476	714		246	369	341	512
1⅞	11	344	516	478	717	8	247	371	343	515
2		346	518	480	720		248	373	345	518
2¼		348	522	484	726		251	377	349	523
2½		351	526	488	731		254	381	353	529
2¾		354	531	491	737		257	385	356	534
3		356	535	495	743		259	389	360	540
1¼		305	458	424	636		208	312	289	433
1⅜		306	460	426	638		209	314	291	436
1½		308	462	428	641		211	316	293	439
1⅝		309	464	429	644		212	318	294	442
1¾		310	466	431	647		213	320	296	444
1⅞	10	312	468	433	650	7	215	322	298	447
2		313	470	435	653		216	324	300	450
2¼		316	474	439	658		219	328	304	456
2½		319	478	443	664		221	332	308	461
2¾		321	482	446	669		224	336	311	467
3		324	486	450	675		227	340	315	473

ASD	LRFD
$\Omega = 2.00$	$\phi = 0.75$

Table 9-3b (continued)
Block Shear
Shear Yielding Component
per inch of thickness, kips/in.

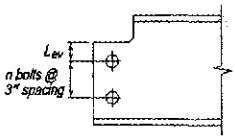

L_{ev}, in.	n	F_y, ksi: 36		50		n	F_y, ksi: 36		50	
		$\frac{0.6F_yA_{gv}}{t\Omega}$	$\frac{\phi 0.6F_yA_{gv}}{t}$	$\frac{0.6F_yA_{gv}}{t\Omega}$	$\frac{\phi 0.6F_yA_{gv}}{t}$		$\frac{0.6F_yA_{gv}}{t\Omega}$	$\frac{\phi 0.6F_yA_{gv}}{t}$	$\frac{0.6F_yA_{gv}}{t\Omega}$	$\frac{\phi 0.6F_yA_{gv}}{t}$
		ASD	LRFD	ASD	LRFD		ASD	LRFD	ASD	LRFD
1¼		175	263	244	366		78.3	117	109	163
1⅜		177	265	246	368		79.6	119	111	166
1½		178	267	248	371		81.0	121	113	169
1⅝		180	269	249	374		82.3	124	114	172
1¾		181	271	251	377		83.7	126	116	174
1⅞	6	182	273	253	380	3	85.0	128	118	177
2		184	275	255	383		86.4	130	120	180
2¼		186	279	259	388		89.1	134	124	186
2½		189	283	263	394		91.8	138	128	191
2¾		192	288	266	399		94.5	142	131	197
3		194	292	270	405		97.2	146	135	203
1¼		143	215	199	298		45.9	68.8	63.8	95.6
1⅜		144	217	201	301		47.2	70.9	65.6	98.4
1½		146	219	203	304		48.6	72.9	67.5	101
1⅝		147	221	204	307		49.9	74.9	69.4	104
1¾		148	223	206	309		51.3	76.9	71.3	107
1⅞	5	150	225	208	312	2	52.7	79.0	73.1	110
2		151	227	210	315		54.0	81.0	75.0	113
2¼		154	231	214	321		56.7	85.0	78.8	118
2½		157	235	218	326		59.4	89.1	82.5	124
2¾		159	239	221	332		62.1	93.1	86.3	129
3		162	243	225	338		64.8	97.2	90.0	135
1¼		111	166	154	231					
1⅜		112	168	156	233					
1½		113	170	158	236					
1⅝		115	172	159	239					
1¾		116	174	161	242					
1⅞	4	117	176	163	245					
2		119	178	165	248					
2¼		121	182	169	253					
2½		124	186	173	259					
2¾		127	190	176	264					
3		130	194	180	270					

ASD	LRFD
$\Omega = 2.00$	$\phi = 0.75$

Table 9-3c
Block Shear Shear Rupture Component
per inch of thickness, kips/in.

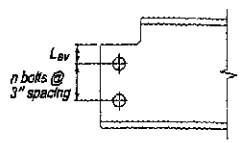

F_u, ksi		58						65					
		Bolt diameter, d, in.											
		3/4		7/8		1		3/4		7/8		1	
n	L_{ev}, in.	$\frac{0.6F_uA_{nv}}{t\Omega}$	$\frac{\phi 0.6F_uA_{nv}}{t}$	$\frac{0.6F_uA_{nv}}{t\Omega}$	$\frac{\phi 0.6F_uA_{nv}}{t}$	$\frac{0.6F_uA_{nv}}{t\Omega}$	$\frac{\phi 0.6F_uA_{nv}}{t}$	$\frac{0.6F_uA_{nv}}{t\Omega}$	$\frac{\phi 0.6F_uA_{nv}}{t}$	$\frac{0.6F_uA_{nv}}{t\Omega}$	$\frac{\phi 0.6F_uA_{nv}}{t}$	$\frac{0.6F_uA_{nv}}{t\Omega}$	$\frac{\phi 0.6F_uA_{nv}}{t}$
		ASD	LRFD	ASD	LRFD	ASD	LRFD	ASD	LRFD	ASD	LRFD	ASD	LRFD
12	1 1/4	421	631	396	594	371	556	472	707	444	665	416	623
	1 3/8	423	635	398	597	373	560	474	711	446	669	418	627
	1 1/2	425	638	400	600	375	563	477	715	449	673	420	631
	1 5/8	427	641	402	604	377	566	479	718	451	676	423	634
	1 3/4	430	644	405	607	380	569	481	722	453	680	425	638
	1 7/8	432	648	407	610	382	573	484	726	456	684	428	642
	2	434	651	409	613	384	576	486	729	458	687	430	645
	2 1/4	438	657	413	620	388	582	491	737	463	695	435	653
	2 1/2	443	664	418	626	393	589	496	744	468	702	440	660
	2 3/4	447	670	422	633	397	595	501	751	473	709	445	667
	3	451	677	426	639	401	602	506	759	478	717	450	675
11	1 1/4	384	576	361	542	338	507	430	645	405	607	379	569
	1 3/8	386	579	363	545	340	511	433	649	407	611	381	572
	1 1/2	388	582	365	548	343	514	435	653	410	614	384	576
	1 5/8	390	586	368	551	345	517	438	656	412	618	386	580
	1 3/4	393	589	370	555	347	520	440	660	414	622	389	583
	1 7/8	395	592	372	558	349	524	442	664	417	625	391	587
	2	397	595	374	561	351	527	445	667	419	629	394	590
	2 1/4	401	602	378	568	356	533	450	675	424	636	399	598
	2 1/2	406	608	383	574	360	540	455	682	429	644	403	605
	2 3/4	410	615	387	581	364	546	459	689	434	651	408	612
	3	414	622	391	587	369	553	464	697	439	658	413	620
10	1 1/4	347	520	326	489	306	458	389	583	366	548	342	514
	1 3/8	349	524	328	493	308	462	391	587	368	552	345	517
	1 1/2	351	527	331	496	310	465	394	590	371	556	347	521
	1 5/8	353	530	333	499	312	468	396	594	373	559	350	525
	1 3/4	356	533	335	502	314	471	399	598	375	563	352	528
	1 7/8	358	537	337	506	316	475	401	601	378	567	355	532
	2	360	540	339	509	319	478	403	605	380	570	357	536
	2 1/4	364	546	344	515	323	484	408	612	385	578	362	543
	2 1/2	369	553	348	522	327	491	413	620	390	585	367	550
	2 3/4	373	560	352	529	332	498	418	627	395	592	372	558
	3	377	566	357	535	336	504	423	634	400	600	377	565

ASD	LRFD
$\Omega = 2.00$	$\phi = 0.75$

Table 9-3c (continued)
Block Shear
Shear Rupture
Component
per inch of thickness, kips/in.

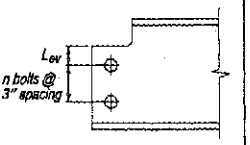

F_u, ksi		58						65					
		Bolt diameter, d, in.											
		3/4		7/8		1		3/4		7/8		1	
n	L_{ev}, in.	$\frac{0.6F_uA_{nv}}{t\Omega}$	$\frac{\phi 0.6F_uA_{nv}}{t}$	$\frac{0.6F_uA_{nv}}{t\Omega}$	$\frac{\phi 0.6F_uA_{nv}}{t}$	$\frac{0.6F_uA_{nv}}{t\Omega}$	$\frac{\phi 0.6F_uA_{nv}}{t}$	$\frac{0.6F_uA_{nv}}{t\Omega}$	$\frac{\phi 0.6F_uA_{nv}}{t}$	$\frac{0.6F_uA_{nv}}{t\Omega}$	$\frac{\phi 0.6F_uA_{nv}}{t}$	$\frac{0.6F_uA_{nv}}{t\Omega}$	$\frac{\phi 0.6F_uA_{nv}}{t}$
		ASD	LRFD	ASD	LRFD	ASD	LRFD	ASD	LRFD	ASD	LRFD	ASD	LRFD
9	1¼	310	465	291	437	273	409	347	521	327	490	306	459
	1⅜	312	468	294	440	275	413	350	525	329	494	308	463
	1½	314	471	296	444	277	416	352	528	332	497	311	466
	1⅝	316	475	298	447	279	419	355	532	334	501	313	470
	1¾	319	478	300	450	282	422	357	536	336	505	316	473
	1⅞	321	481	302	453	284	426	360	539	339	508	318	477
	2	323	484	305	457	286	429	362	543	341	512	321	481
	2¼	327	491	309	463	290	436	367	550	346	519	325	488
	2½	332	498	313	470	295	442	372	558	351	527	330	495
	2¾	336	504	318	476	299	449	377	565	356	534	335	503
	3	340	511	322	483	303	455	381	572	361	541	340	510
8	1¼	273	409	257	385	240	361	306	459	288	431	269	404
	1⅜	275	413	259	388	243	364	308	463	290	435	272	408
	1½	277	416	261	392	245	367	311	466	293	439	274	411
	1⅝	279	419	263	395	247	370	313	470	295	442	277	415
	1¾	282	422	265	398	249	374	316	473	297	446	279	419
	1⅞	284	426	268	401	251	377	318	477	300	450	282	422
	2	286	429	270	405	253	380	321	481	302	453	284	426
	2¼	290	436	274	411	258	387	325	488	307	461	289	433
	2½	295	442	278	418	262	393	330	495	312	468	294	441
	2¾	299	449	283	424	266	400	335	503	317	475	299	448
	3	303	455	287	431	271	406	340	510	322	483	303	455
7	1¼	236	354	222	333	208	312	264	397	249	373	233	349
	1⅜	238	357	224	336	210	315	267	400	251	377	235	353
	1½	240	361	226	339	212	318	269	404	254	380	238	356
	1⅝	243	364	228	343	214	321	272	408	256	384	240	360
	1¾	245	367	231	346	216	325	274	411	258	388	243	364
	1⅞	247	370	233	349	219	328	277	415	261	391	245	367
	2	249	374	235	352	221	331	279	419	263	395	247	371
	2¼	253	380	239	359	225	338	284	426	268	402	252	378
	2½	258	387	244	365	229	344	289	433	273	410	257	386
	2¾	262	393	248	372	234	351	294	441	278	417	262	393
	3	266	400	252	378	238	357	299	448	283	424	267	400

ASD	LRFD
$\Omega = 2.00$	$\phi = 0.75$

Table 9-3c (continued)
Block Shear
Shear Rupture
Component
per inch of thickness, kips/in.

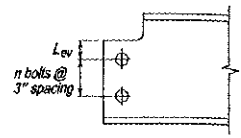

F_u, ksi		58						65					
		Bolt diameter, d, in.											
		3/4		7/8		1		3/4		7/8		1	
n	L_{ev}, in.	$\frac{0.6F_uA_{nv}}{t\Omega}$	$\frac{\phi 0.6F_uA_{nv}}{t}$	$\frac{0.6F_uA_{nv}}{t\Omega}$	$\frac{\phi 0.6F_uA_{nv}}{t}$	$\frac{0.6F_uA_{nv}}{t\Omega}$	$\frac{\phi 0.6F_uA_{nv}}{t}$	$\frac{0.6F_uA_{nv}}{t\Omega}$	$\frac{\phi 0.6F_uA_{nv}}{t}$	$\frac{0.6F_uA_{nv}}{t\Omega}$	$\frac{\phi 0.6F_uA_{nv}}{t}$	$\frac{0.6F_uA_{nv}}{t\Omega}$	$\frac{\phi 0.6F_uA_{nv}}{t}$
		ASD	LRFD	ASD	LRFD	ASD	LRFD	ASD	LRFD	ASD	LRFD	ASD	LRFD
6	1¼	199	299	187	281	175	263	223	335	210	314	196	294
	1⅜	201	302	189	284	177	266	225	338	212	318	199	298
	1½	203	305	191	287	179	269	228	342	215	322	201	302
	1⅝	206	308	194	290	182	272	230	346	217	325	204	305
	1¾	208	312	196	294	184	276	233	349	219	329	206	309
	1⅞	210	315	198	297	186	279	235	353	222	333	208	313
	2	212	318	200	300	188	282	238	356	224	336	211	316
	2¼	216	325	204	307	192	289	243	364	229	344	216	324
	2½	221	331	209	313	197	295	247	371	234	351	221	331
	2¾	225	338	213	320	201	302	252	378	239	358	225	338
	3	229	344	217	326	206	308	257	386	244	366	230	346
5	1¼	162	243	152	228	142	214	182	272	171	256	160	239
	1⅜	164	246	154	232	145	217	184	276	173	260	162	243
	1½	166	250	157	235	147	220	186	280	176	263	165	247
	1⅝	169	253	159	238	149	223	189	283	178	267	167	250
	1¾	171	256	161	241	151	227	191	287	180	271	169	254
	1⅞	173	259	163	245	153	230	194	291	183	274	172	258
	2	175	263	165	248	156	233	196	294	185	278	174	261
	2¼	179	269	170	254	160	240	201	302	190	285	179	269
	2½	184	276	174	261	164	246	206	309	195	293	184	276
	2¾	188	282	178	268	169	253	211	316	200	300	189	283
	3	192	289	183	274	173	259	216	324	205	307	194	291
4	1¼	125	188	117	176	110	165	140	210	132	197	123	185
	1⅜	127	191	120	179	112	168	143	214	134	201	126	188
	1½	129	194	122	183	114	171	145	218	137	205	128	192
	1⅝	132	197	124	186	116	175	147	221	139	208	130	196
	1¾	134	201	126	189	119	178	150	225	141	212	133	199
	1⅞	136	204	128	192	121	181	152	229	144	216	135	203
	2	138	207	131	196	123	184	155	232	146	219	138	207
	2¼	142	214	135	202	127	191	160	239	151	227	143	214
	2½	147	220	139	209	132	197	165	247	156	234	147	221
	2¾	151	227	144	215	136	204	169	254	161	241	152	229
	3	156	233	148	222	140	210	174	261	166	249	157	236

ASD	LRFD
$\Omega = 2.00$	$\phi = 0.75$

Table 9-3c (continued)
Block Shear
Shear Rupture
Component
per inch of thickness, kips/in.

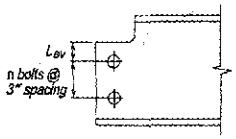

F_u, ksi		58						65					
		Bolt diameter, d, in.											
		3/4		7/8		1		3/4		7/8		1	
n	L_{ev}, in.	$\frac{0.6F_uA_{nv}}{t\Omega}$	$\frac{\phi 0.6F_uA_{nv}}{t}$	$\frac{0.6F_uA_{nv}}{t\Omega}$	$\frac{\phi 0.6F_uA_{nv}}{t}$	$\frac{0.6F_uA_{nv}}{t\Omega}$	$\frac{\phi 0.6F_uA_{nv}}{t}$	$\frac{0.6F_uA_{nv}}{t\Omega}$	$\frac{\phi 0.6F_uA_{nv}}{t}$	$\frac{0.6F_uA_{nv}}{t\Omega}$	$\frac{\phi 0.6F_uA_{nv}}{t}$	$\frac{0.6F_uA_{nv}}{t\Omega}$	$\frac{\phi 0.6F_uA_{nv}}{t}$
		ASD	LRFD	ASD	LRFD	ASD	LRFD	ASD	LRFD	ASD	LRFD	ASD	LRFD
3	1¼	88.1	132	82.6	124	77.2	116	98.7	148	92.6	139	86.5	130
	1⅜	90.3	135	84.8	127	79.4	119	101	152	95.1	143	89.0	133
	1½	92.4	139	87.0	131	81.6	122	104	155	97.5	146	91.4	137
	1⅝	94.6	142	89.2	134	83.7	126	106	159	99.9	150	93.8	141
	1¾	96.8	145	91.4	137	85.9	129	108	163	102	154	96.3	144
	1⅞	99.0	148	93.5	140	88.1	132	111	166	105	157	98.7	148
	2	101	152	95.7	144	90.3	135	113	170	107	161	101	152
	2¼	105	158	100	150	94.6	142	118	177	112	168	106	159
	2½	110	165	104	157	99.0	148	123	185	117	176	111	166
	2¾	114	171	109	163	103	155	128	192	122	183	116	174
	3	119	178	113	170	108	161	133	199	127	190	121	181
2	1¼	51.1	76.7	47.8	71.8	44.6	66.9	57.3	85.9	53.6	80.4	50.0	75.0
	1⅜	53.3	79.9	50.0	75.0	46.8	70.1	59.7	89.6	56.1	84.1	52.4	78.6
	1½	55.5	83.2	52.2	78.3	48.9	73.4	62.2	93.2	58.5	87.8	54.8	82.3
	1⅝	57.6	86.5	54.4	81.6	51.1	76.7	64.6	96.9	60.9	91.4	57.3	85.9
	1¾	59.8	89.7	56.6	84.8	53.3	79.9	67.0	101	63.4	95.1	59.7	89.6
	1⅞	62.0	93.0	58.7	88.1	55.5	83.2	69.5	104	65.8	98.7	62.2	93.2
	2	64.2	96.2	60.9	91.4	57.6	86.5	71.9	108	68.3	102	64.6	96.9
	2¼	68.5	103	65.3	97.9	62.0	93.0	76.8	115	73.1	110	69.5	104
	2½	72.9	109	69.6	104	66.3	99.5	81.7	122	78.0	117	74.3	112
	2¾	77.2	116	73.9	111	70.7	106	86.5	130	82.9	124	79.2	119
	3	81.6	122	78.3	117	75.0	113	91.4	137	87.8	132	84.1	126

ASD	LRFD
$\Omega = 2.00$	$\phi = 0.75$

Table 9-4
Beam Bearing Constants

F_y = 50 ksi

Shape	R_1/Ω kips ASD	ϕR_1 kips LRFD	R_2/Ω kips/in. ASD	ϕR_2 kips/in. LRFD	R_3/Ω kips ASD	ϕR_3 kips LRFD	R_4/Ω kips/in. ASD	ϕR_4 kips/in. LRFD
W44×335	220	330	34.3	51.5	335	502	10.1	15.2
×290	170	255	28.8	43.3	244	365	6.79	10.2
×262	144	216	26.2	39.3	200	299	5.68	8.53
×230	119	178	23.7	35.5	159	239	4.94	7.41
W40×593	658	987	59.7	89.5	1040	1550	29.8	44.8
×503	506	758	51.3	77.0	765	1150	22.7	34.1
×431	395	593	44.7	67.0	574	861	17.8	26.8
×397	344	515	40.7	61.0	481	722	14.5	21.8
×372	312	468	38.7	58.0	431	646	13.5	20.3
×362	298	447	37.3	56.0	405	607	12.4	18.7
×324	249	374	33.3	50.0	324	486	9.93	14.9
×297	219	329	31.0	46.5	277	416	8.85	13.3
×277	191	286	27.7	41.5	229	343	6.59	9.88
×249	163	244	25.0	37.5	186	280	5.45	8.17
×215	130	195	21.7	32.5	139	209	4.17	6.26
×199	122	183	21.7	32.5	131	196	4.79	7.19
W40×392	438	657	47.3	71.0	647	970	19.7	29.6
×331	337	505	40.7	61.0	474	710	15.1	22.6
×327	325	488	39.3	59.0	451	676	13.7	20.5
×294	275	412	35.3	53.0	365	548	11.0	16.6
×278	257	385	34.3	51.5	339	508	10.9	16.3
×264	233	349	32.0	48.0	298	447	9.24	13.9
×235	191	286	27.7	41.5	229	343	6.59	9.88
×211	163	244	25.0	37.5	186	280	5.45	8.17
×183	129	193	21.7	32.5	138	207	4.24	6.36
×167	120	180	21.7	32.5	128	192	4.99	7.49
×149	106	158	21.0	31.5	110	165	5.70	8.55
W36×652	737	1110	65.7	98.5	1250	1880	38.0	56.9
×529	518	777	53.7	80.5	839	1260	26.0	39.1
×487	454	681	50.0	75.0	724	1090	23.2	34.7
×441	384	576	45.3	68.0	597	895	19.1	28.7
×395	320	480	40.7	61.0	481	722	15.5	23.3
×361	276	414	37.3	56.0	405	607	13.3	19.9
×330	238	357	34.0	51.0	337	506	11.0	16.5
×302	207	311	31.5	47.3	287	430	9.73	14.6
×282	186	279	29.5	44.3	251	377	8.60	12.9
×262	167	251	28.0	42.0	222	334	8.06	12.1
×247	153	230	26.7	40.0	200	300	7.47	11.2
×231	140	210	25.3	38.0	179	269	6.90	10.3

For R_1 and R_2		For R_3, R_4, R_5, R_6	
ASD	LRFD	ASD	LRFD
$\Omega = 1.50$	$\phi = 1.00$	$\Omega = 2.00$	$\phi = 0.75$

Table 9-4 (continued)
Beam Bearing Constants

F_y = 50 ksi

Nominal Wt.	R_5/Ω	ϕR_5	R_6/Ω	ϕR_6	(l_b = 3¼ in.) $x < d/2$		$d/2 \le x \le d$		$x > d$		V_{nx}/Ω_v	$\phi_v V_{nx}$
					R_n/Ω	ϕR_n	R_n/Ω	ϕR_n	R_n/Ω	ϕR_n		
	kips	kips	kips/in.	kips/in.	kips	kips	kips	kips	kips	kips	kips	kips
lb/ft	ASD	LRFD	ASD	LRFD	ASD	LRFD	ASD	LRFD	ASD	LRFD	ASD	LRFD
335	305	458	13.5	20.3	331	497	331	497	551	827	906	1360
290	224	336	9.05	13.6	264	396	264	396	434	651	754	1130
262	183	275	7.56	11.4	218	327	229	344	373	560	680	1020
230	145	218	6.59	9.88	175	263	196	293	315	471	547	822
593	951	1430	39.8	59.7	—	—	—	—	1510	2260	1540	2310
503	701	1050	30.3	45.4	—	—	—	—	1180	1770	1300	1950
431	525	787	23.8	35.7	—	—	—	—	935	1400	1110	1660
397	442	662	19.4	29.1	—	—	—	—	820	1230	1000	1500
372	394	591	18.1	27.1	438	657	438	657	750	1120	942	1410
362	371	557	16.6	24.9	419	629	419	629	717	1080	909	1360
324	297	446	13.2	19.9	356	534	357	537	606	911	804	1210
297	254	381	11.8	17.7	306	459	320	480	539	809	740	1110
277	211	317	8.78	13.2	250	375	281	421	472	707	659	989
249	172	258	7.26	10.9	204	307	244	366	407	610	591	887
215	129	193	5.56	8.34	153	229	201	301	305	459	507	761
199	118	177	6.39	9.58	147	219	193	289	293	439	503	755
392	592	888	26.3	39.5	—	—	—	—	1030	1540	1180	1770
331	433	649	20.1	30.2	—	—	—	—	806	1210	996	1490
327	413	620	18.2	27.3	—	—	—	—	778	1170	963	1440
294	335	503	14.7	22.1	390	584	390	584	665	996	856	1280
278	310	464	14.5	21.7	368	552	368	552	625	937	828	1240
264	273	410	12.3	18.5	328	492	337	505	570	854	768	1150
235	211	317	8.78	13.2	250	375	281	421	472	707	659	989
211	172	258	7.26	10.9	204	307	244	366	407	610	591	887
183	127	191	5.65	8.48	152	228	200	299	304	455	507	761
167	115	173	6.65	9.98	144	216	191	286	288	433	502	753
149	95.2	143	7.60	11.4	129	193	174	260	257	386	432	650
652	1150	1720	50.6	75.9	—	—	—	—	1690	2540	1620	2430
529	770	1160	34.7	52.1	—	—	—	—	1210	1820	1280	1920
487	664	995	30.9	46.3	—	—	—	—	1070	1610	1180	1770
441	547	820	25.5	38.3	—	—	—	—	915	1370	1060	1590
395	442	662	20.7	31.1	452	678	452	678	772	1160	937	1410
361	371	557	17.7	26.6	397	596	397	596	673	1010	851	1280
330	310	465	14.7	22.0	349	523	349	523	587	880	769	1150
302	263	394	13.0	19.5	309	465	309	465	516	776	705	1060
282	230	345	11.5	17.2	279	419	282	423	468	702	657	985
262	203	304	10.7	16.1	248	373	258	388	425	639	620	930
247	182	273	9.96	14.9	224	336	240	360	393	590	587	881
231	162	243	9.19	13.8	201	302	222	334	362	544	555	832

—Indicates that 3¼-in. bearing length is insufficient for end beam reactions since $l_b < k$.
l_b = length of bearing, in.
x = location of concentrated force with respect to the member end, in.

Table 9-4 (continued)
Beam Bearing Constants

F_y = 50 ksi

Shape	R_1/Ω kips ASD	ϕR_1 kips LRFD	R_2/Ω kips/in. ASD	ϕR_2 kips/in. LRFD	R_3/Ω kips ASD	ϕR_3 kips LRFD	R_4/Ω kips/in. ASD	ϕR_4 kips/in. LRFD
W36×256	198	298	32.0	48.0	298	447	9.88	14.8
×232	168	252	29.0	43.5	245	367	8.17	12.3
×210	146	219	27.7	41.5	212	319	8.28	12.4
×194	128	192	25.5	38.3	181	271	7.03	10.5
×182	117	175	24.2	36.3	161	242	6.43	9.64
×170	105	157	22.7	34.0	142	212	5.71	8.56
×160	95.9	144	21.7	32.5	127	191	5.40	8.11
×150	88.0	132	20.8	31.3	115	173	5.23	7.84
×135	77.0	116	20.0	30.0	99.5	149	5.55	8.32
W33×387	322	484	42.0	63.0	514	771	17.6	26.4
×354	278	418	38.7	58.0	435	652	15.2	22.7
×318	232	348	34.7	52.0	351	527	12.2	18.3
×291	202	302	32.0	48.0	298	447	10.6	15.9
×263	171	257	29.0	43.5	245	367	8.78	13.2
×241	151	227	27.7	41.5	215	323	8.63	12.9
×221	133	200	25.8	38.8	186	279	7.75	11.6
×201	116	173	23.8	35.8	156	234	6.81	10.2
W33×169	107	161	22.3	33.5	146	219	5.27	7.90
×152	93.1	140	21.2	31.8	125	188	5.21	7.81
×141	83.7	126	20.2	30.3	111	167	5.00	7.51
×130	75.4	113	19.3	29.0	98.4	148	4.98	7.47
×118	66.0	99.0	18.3	27.5	84.5	127	4.94	7.41
W30×391	366	549	45.3	68.0	597	895	22.4	33.7
×357	313	470	41.3	62.0	498	747	18.7	28.1
×326	270	405	38.0	57.0	420	630	16.1	24.2
×292	224	337	34.0	51.0	337	506	13.0	19.4
×261	189	284	31.0	46.5	277	416	11.1	16.7
×235	158	238	27.7	41.5	223	335	8.80	13.2
×211	136	203	25.8	38.8	189	283	8.25	12.4
×191	117	175	23.7	35.5	157	236	7.08	10.6
×173	101	151	21.8	32.8	132	198	6.24	9.36
W30×148	99.1	149	21.7	32.5	137	206	5.48	8.22
×132	84.6	127	20.5	30.8	116	174	5.55	8.32
×124	77.0	116	19.5	29.3	104	156	5.15	7.73
×116	70.6	106	18.8	28.3	94.3	141	5.11	7.67
×108	64.0	96.1	18.2	27.3	84.5	127	5.16	7.75
×99	57.2	85.8	17.3	26.0	73.9	111	5.11	7.66
×90	49.4	74.0	15.7	23.5	60.6	90.9	4.17	6.25

For R_1 and R_2		For R_3, R_4, R_5, R_6	
ASD	LRFD	ASD	LRFD
$\Omega = 1.50$	$\phi = 1.00$	$\Omega = 2.00$	$\phi = 0.75$

Table 9-4 (continued)
Beam Bearing Constants

F_y = 50 ksi

Nominal Wt.	R_5/Ω	ϕR_5	R_6/Ω	ϕR_6	(l_b = 3¼ in.) $x < d/2$		$d/2 \le x \le d$		$x > d$		V_{nx}/Ω_v	$\phi_v V_{nx}$
					R_n/Ω	ϕR_n	R_n/Ω	ϕR_n	R_n/Ω	ϕR_n		
	kips	kips	kips/in.	kips/in.	kips	kips	kips	kips	kips	kips	kips	kips
lb/ft	ASD	LRFD	ASD	LRFD	ASD	LRFD	ASD	LRFD	ASD	LRFD	ASD	LRFD
256	273	410	13.2	19.8	302	454	302	454	500	752	718	1080
232	225	337	10.9	16.3	262	393	262	393	430	645	646	968
210	192	288	11.0	16.6	236	354	236	354	382	573	609	914
194	164	246	9.38	14.1	204	305	211	316	339	508	558	838
182	146	219	8.57	12.9	182	273	196	293	313	468	526	790
170	128	192	7.61	11.4	161	240	179	268	284	425	492	738
160	114	172	7.20	10.8	145	217	166	250	262	394	468	702
150	103	154	6.97	10.5	132	198	156	234	244	366	449	673
135	86.3	129	7.40	11.1	118	176	142	214	219	330	384	577
387	472	708	23.5	35.2	459	689	459	689	781	1170	907	1360
354	399	599	20.2	30.3	404	607	404	607	682	1020	826	1240
318	322	484	16.3	24.4	345	517	345	517	577	865	732	1100
291	273	410	14.2	21.2	306	458	306	458	508	760	668	1000
263	225	337	11.7	17.6	265	398	265	398	436	655	600	900
241	196	294	11.5	17.3	241	362	241	362	392	589	568	852
221	168	253	10.3	15.5	211	317	217	326	350	526	525	788
201	141	211	9.09	13.6	178	267	193	289	309	462	482	723
169	134	201	7.03	10.5	163	245	179	270	286	431	453	679
152	114	171	6.95	10.4	142	213	162	243	255	383	425	638
141	99.9	150	6.67	10.0	127	191	149	224	233	350	403	604
130	87.4	131	6.64	9.96	115	172	138	207	214	320	384	576
118	73.7	111	6.58	9.87	101	151	125	188	191	287	325	489
391	547	820	29.9	44.9	513	770	513	770	879	1320	903	1350
357	457	685	25.0	37.5	447	672	447	672	760	1140	813	1220
326	385	577	21.5	32.2	394	590	394	590	664	995	739	1110
292	310	465	17.3	25.9	335	503	335	503	559	840	653	979
261	254	381	14.9	22.3	290	435	290	435	479	719	588	882
235	205	307	11.7	17.6	248	373	248	373	406	611	520	779
211	172	258	11.0	16.5	216	323	220	329	356	532	479	718
191	143	214	9.44	14.2	180	270	194	290	311	465	436	654
173	119	179	8.32	12.5	152	228	172	258	273	409	398	597
148	126	189	7.30	11.0	155	233	170	255	269	404	399	599
132	105	157	7.40	11.1	134	201	151	227	236	354	373	559
124	93.5	140	6.87	10.3	121	181	140	211	217	327	353	530
116	84.1	126	6.81	10.2	111	166	132	198	202	304	339	509
108	74.2	111	6.89	10.3	101	152	123	185	187	281	325	487
99	63.8	95.7	6.81	10.2	90.5	136	113	170	171	256	309	463
90	52.4	78.6	5.56	8.34	74.2	111	100	150	148	222	249	374

—Indicates that 3¼-in. bearing length is insufficient for end beam reactions since $l_b < k$.
l_b = length of bearing, in.
x = location of concentrated force with respect to the member end, in.

Table 9-4 (continued)
Beam Bearing Constants

F_y = 50 ksi

Shape	R_1/Ω kips ASD	ϕR_1 kips LRFD	R_2/Ω kips/in. ASD	ϕR_2 kips/in. LRFD	R_3/Ω kips ASD	ϕR_3 kips LRFD	R_4/Ω kips/in. ASD	ϕR_4 kips/in. LRFD
W27×539	711	1070	65.7	98.5	1250	1880	48.0	72.0
×368	376	564	46.0	69.0	615	922	25.2	37.8
×336	322	484	42.0	63.0	514	771	21.1	31.7
×307	278	418	38.7	58.0	435	652	18.2	27.3
×281	240	360	35.3	53.0	365	548	15.2	22.8
×258	209	314	32.7	49.0	311	466	13.2	19.9
×235	182	273	30.3	45.5	265	398	11.8	17.7
×217	158	238	27.7	41.5	223	335	9.70	14.5
×194	133	200	25.0	37.5	181	272	8.09	12.1
×178	120	179	24.2	36.3	162	243	8.32	12.5
×161	103	154	22.0	33.0	134	201	6.97	10.5
×146	88.7	133	20.2	30.3	112	168	5.99	8.98
W27×129	86.4	130	20.3	30.5	120	181	5.40	8.10
×114	72.7	109	19.0	28.5	99.9	150	5.27	7.91
×102	61.4	92.1	17.2	25.8	81.1	122	4.39	6.58
×94	54.7	82.1	16.3	24.5	71.3	107	4.24	6.36
×84	47.5	71.3	15.3	23.0	60.1	90.2	4.12	6.17
W24×370	408	612	50.7	76.0	744	1120	33.3	50.0
×335	343	514	46.0	69.0	615	922	27.8	41.8
×306	292	438	42.0	63.0	514	771	23.4	35.1
×279	250	376	38.7	58.0	435	652	20.2	30.3
×250	207	311	34.7	52.0	351	527	16.3	24.5
×229	178	268	32.0	48.0	298	447	14.2	21.3
×207	150	225	29.0	43.5	245	367	11.8	17.7
×192	132	198	27.0	40.5	212	318	10.3	15.5
×176	115	173	25.0	37.5	181	272	9.03	13.5
×162	101	152	23.5	35.3	157	236	8.30	12.5
×146	86.1	129	21.7	32.5	132	198	7.37	11.1
×131	73.6	110	20.2	30.3	111	167	6.80	10.2
×117	61.9	92.8	18.3	27.5	90.6	136	5.82	8.73
×104	52.1	78.1	16.7	25.0	73.7	111	5.00	7.49
W24×103	67.8	102	18.3	27.5	97.2	146	5.01	7.51
×94	59.2	88.8	17.2	25.8	83.3	125	4.64	6.96
×84	49.7	74.6	15.7	23.5	68.1	102	4.04	6.06
×76	43.3	64.9	14.7	22.0	58.0	86.9	3.79	5.68
×68	37.7	56.5	13.8	20.8	49.2	73.9	3.72	5.59
×62	39.1	58.6	14.3	21.5	52.2	78.2	4.11	6.16
×55	33.2	49.9	13.2	19.8	42.5	63.7	3.74	5.60

For R_1 and R_2		For R_3, R_4, R_5, R_6	
ASD	LRFD	ASD	LRFD
$\Omega = 1.50$	$\phi = 1.00$	$\Omega = 2.00$	$\phi = 0.75$

Table 9-4 (continued)
Beam Bearing Constants

F_y = 50 ksi

Nominal Wt.	R_5/Ω	ϕR_5	R_6/Ω	ϕR_6	(l_b = 3¼ in.)						V_{nx}/Ω_v	$\phi_v V_{nx}$
					$x < d/2$		$d/2 \le x \le d$		$x > d$			
					R_n/Ω	ϕR_n	R_n/Ω	ϕR_n	R_n/Ω	ϕR_n		
	kips	kips	kips/in.	kips/in.	kips	kips	kips	kips	kips	kips	kips	kips
lb/ft	ASD	LRFD	ASD	LRFD	ASD	LRFD	ASD	LRFD	ASD	LRFD	ASD	LRFD
539	1150	1720	64.0	96.0	—	—	—	—	1640	2460	1280	1920
368	564	846	33.6	50.4	—	—	—	—	902	1350	839	1260
336	472	708	28.2	42.3	459	689	459	689	781	1170	756	1130
307	399	599	24.3	36.5	404	607	404	607	682	1020	687	1030
281	335	503	20.3	30.4	355	532	355	532	595	892	621	932
258	285	428	17.7	26.5	315	473	315	473	524	787	568	853
235	243	364	15.7	23.6	280	421	280	421	462	694	522	784
217	205	307	12.9	19.4	248	373	248	373	406	611	471	707
194	166	249	10.8	16.2	207	311	214	322	347	522	422	632
178	147	220	11.1	16.6	189	284	199	297	319	476	403	605
161	121	182	9.29	13.9	157	235	175	261	278	415	364	546
146	101	151	7.99	12.0	131	197	154	231	243	364	332	497
129	110	166	7.20	10.8	138	207	152	229	239	359	337	505
114	90.4	136	7.03	10.5	117	176	134	202	207	311	311	467
102	73.2	110	5.85	8.77	95.4	143	117	176	179	268	279	419
94	63.7	95.5	5.66	8.48	85.1	128	108	162	162	244	264	395
84	52.8	79.2	5.49	8.23	73.5	110	97.2	146	145	217	246	368
370	682	1020	44.4	66.6	573	859	573	859	981	1470	851	1280
335	564	846	37.1	55.7	493	738	493	738	836	1250	759	1140
306	472	708	31.2	46.8	429	643	429	643	721	1080	683	1020
279	399	599	26.9	40.4	376	565	376	565	626	941	619	929
250	322	484	21.8	32.7	320	480	320	480	527	791	547	821
229	273	410	18.9	28.4	282	424	282	424	460	692	499	749
207	225	337	15.7	23.6	244	366	244	366	394	591	447	671
192	195	292	13.8	20.6	220	330	220	330	352	528	413	620
176	166	249	12.0	18.1	196	295	196	295	311	468	378	567
162	144	215	11.1	16.6	177	267	177	267	278	419	353	529
146	120	179	9.83	14.7	156	234	157	235	243	364	321	482
131	99.9	150	9.07	13.6	133	200	139	208	213	318	296	445
117	81.1	122	7.76	11.6	110	164	121	182	183	275	267	401
104	65.7	98.6	6.66	9.99	90.0	135	106	159	158	237	241	362
103	89.1	134	6.68	10.0	113	170	127	191	195	293	270	404
94	75.7	114	6.19	9.28	98.4	148	115	173	174	261	250	375
84	61.6	92.4	5.39	8.08	81.2	122	101	151	150	226	227	340
76	51.9	77.9	5.05	7.57	70.3	105	91.1	136	134	201	210	315
68	43.4	65.0	4.97	7.45	61.3	92.1	82.6	124	120	181	197	295
62	45.7	68.5	5.48	8.22	65.6	98.2	85.6	128	125	187	204	306
55	36.6	54.9	4.98	7.47	54.7	81.9	76.1	114	109	164	167	252

—Indicates that 3¼-in. bearing length is insufficient for end beam reactions since $l_b < k$.
l_b = length of bearing, in.
x = location of concentrated force with respect to the member end, in.

Table 9-4 (continued)
Beam Bearing Constants

F_y = 50 ksi

Shape	R_1/Ω kips ASD	ϕR_1 kips LRFD	R_2/Ω kips/in. ASD	ϕR_2 kips/in. LRFD	R_3/Ω kips ASD	ϕR_3 kips LRFD	R_4/Ω kips/in. ASD	ϕR_4 kips/in. LRFD
W21×201	162	242	30.3	45.5	267	400	14.5	21.8
×182	137	205	27.7	41.5	222	332	12.3	18.4
×166	116	174	25.0	37.5	182	274	9.96	14.9
×147	99.0	149	24.0	36.0	158	237	10.6	15.9
×132	83.4	125	21.7	32.5	129	193	8.75	13.1
×122	73.0	110	20.0	30.0	110	165	7.49	11.2
×111	63.3	94.9	18.3	27.5	91.9	138	6.39	9.58
×101	54.2	81.3	16.7	25.0	76.2	114	5.28	7.91
W21×93	69.1	104	19.3	29.0	103	154	7.02	10.5
×83	57.5	86.3	17.2	25.8	81.3	122	5.52	8.28
×73	47.0	70.5	15.2	22.8	63.6	95.4	4.34	6.51
×68	42.6	64.0	14.3	21.5	56.2	84.3	3.97	5.96
×62	37.3	56.0	13.3	20.0	47.8	71.7	3.58	5.37
×55	31.9	47.8	12.5	18.8	40.0	59.9	3.51	5.26
×48	27.1	40.7	11.7	17.5	32.7	49.1	3.50	5.25
W21×57	38.8	58.2	13.5	20.3	50.0	75.1	3.50	5.25
×50	32.9	49.4	12.7	19.0	41.3	61.9	3.56	5.34
×44	27.7	41.6	11.7	17.5	33.5	50.2	3.33	4.99
W18×311	410	616	50.7	76.0	747	1120	41.5	62.3
×283	350	525	46.7	70.0	631	946	36.2	54.3
×258	288	432	42.7	64.0	529	793	30.6	46.0
×234	243	364	38.7	58.0	437	656	25.3	38.0
×211	204	306	35.3	53.0	363	545	21.8	32.6
×192	172	258	32.0	48.0	300	450	17.9	26.9
×175	148	221	29.7	44.5	255	382	16.0	24.0
×158	124	186	27.0	40.5	211	316	13.5	20.3
×143	105	157	24.3	36.5	173	259	10.9	16.4
×130	89.3	134	22.3	33.5	145	217	9.38	14.1
×119	79.7	120	21.8	32.8	131	197	10.1	15.1
×106	65.9	98.8	19.7	29.5	106	159	8.44	12.7
×97	56.6	84.9	17.8	26.8	87.9	132	6.84	10.3
×86	46.8	70.2	16.0	24.0	70.3	105	5.64	8.46
×76	38.3	57.4	14.2	21.3	55.0	82.5	4.48	6.72
W18×71	49.9	74.9	16.5	24.8	75.5	113	5.85	8.77
×65	43.1	64.7	15.0	22.5	63.0	94.4	4.77	7.16
×60	38.0	57.1	13.8	20.8	53.7	80.5	4.08	6.12
×55	33.5	50.2	13.0	19.5	46.6	69.8	3.76	5.64
×50	28.8	43.1	11.8	17.8	38.5	57.7	3.15	4.73

For R_1 and R_2		For R_3, R_4, R_5, R_6	
ASD	LRFD	ASD	LRFD
$\Omega = 1.50$	$\phi = 1.00$	$\Omega = 2.00$	$\phi = 0.75$

Table 9-4 (continued)
Beam Bearing Constants

F_y = 50 ksi

Nominal Wt.	R_6/Ω	ϕR_5	R_6/Ω	ϕR_6	(l_b = 3¼ in.)						V_{nx}/Ω_v	$\phi_v V_{nx}$
					$x < d/2$		$d/2 \le x \le d$		$x > d$			
					R_n/Ω	ϕR_n	R_n/Ω	ϕR_n	R_n/Ω	ϕR_n		
	kips	kips	kips/in.	kips/in.	kips	kips	kips	kips	kips	kips	kips	kips
lb/ft	ASD	LRFD	ASD	LRFD	ASD	LRFD	ASD	LRFD	ASD	LRFD	ASD	LRFD
201	245	367	19.4	29.0	260	390	260	390	422	632	419	628
182	203	304	16.4	24.6	227	340	227	340	364	545	377	565
166	167	251	13.3	19.9	197	296	197	296	313	470	338	506
147	142	213	14.1	21.2	177	266	177	266	276	415	318	477
132	116	174	11.7	17.5	154	231	154	231	237	356	283	425
122	98.8	148	9.99	15.0	134	201	138	208	211	318	260	391
111	82.7	124	8.52	12.8	113	169	123	184	186	279	237	355
101	68.6	103	7.03	10.6	93.4	140	108	163	163	244	214	321
93	92.5	139	9.36	14.0	126	188	132	198	201	302	251	376
83	73.5	110	7.36	11.0	99.2	149	113	170	171	256	220	331
73	57.5	86.2	5.78	8.68	77.7	117	96.4	145	143	215	193	289
68	50.6	75.9	5.30	7.95	69.1	104	89.1	134	132	198	181	272
62	42.8	64.2	4.77	7.16	59.4	89.2	80.5	121	118	177	168	252
55	35.1	52.6	4.68	7.02	51.4	77.0	72.5	109	103	154	156	234
48	27.9	41.8	4.66	6.99	44.1	66.2	65.1	97.6	88.2	132	144	216
57	45.1	67.7	4.67	7.00	61.4	92.2	82.7	124	121	182	171	256
50	36.3	54.5	4.75	7.13	52.9	79.3	74.2	111	106	159	158	237
44	28.9	43.3	4.43	6.65	44.3	66.4	65.7	98.5	88.6	133	145	217
311	685	1030	55.4	83.1	575	863	575	863	985	1480	678	1020
283	578	867	48.3	72.4	502	753	502	753	852	1280	613	920
258	485	728	40.9	61.3	427	640	427	640	715	1070	550	826
234	401	602	33.8	50.7	369	553	369	553	612	917	490	734
211	333	500	29.0	43.5	319	478	319	478	523	784	439	658
192	275	413	23.9	35.8	276	414	276	414	448	672	392	588
175	234	350	21.4	32.0	245	366	245	366	393	587	356	534
158	193	289	18.0	27.1	212	318	212	318	336	504	319	479
143	158	238	14.6	21.8	184	276	184	276	289	433	285	427
130	133	199	12.5	18.8	162	243	162	243	251	377	259	388
119	119	178	13.4	20.2	151	227	151	227	230	347	249	373
106	95.3	143	11.3	16.9	130	195	130	195	196	293	221	331
97	79.4	119	9.12	13.7	110	165	114	172	171	257	199	299
86	63.4	95.0	7.52	11.3	88.6	132	98.8	148	146	218	177	265
76	49.6	74.4	5.98	8.96	69.6	104	84.5	127	123	184	155	232
71	68.3	102	7.80	11.7	94.5	142	104	156	153	230	183	275
65	57.1	85.7	6.36	9.54	78.5	118	91.9	138	135	203	166	248
60	48.7	73.1	5.44	8.16	67.0	100	82.9	125	121	182	151	227
55	42.0	63.0	5.01	7.52	58.8	88.1	75.8	114	109	164	141	212
50	34.7	52.0	4.20	6.30	48.7	73.1	67.2	101	96.0	144	128	192

l_b = length of bearing, in.
x = location of concentrated force with respect to the member end, in.

F_y = 50 ksi

Table 9-4 (continued)
Beam Bearing Constants

Shape	R_1/Ω kips ASD	ϕR_1 kips LRFD	R_2/Ω kips/in. ASD	ϕR_2 kips/in. LRFD	R_3/Ω kips ASD	ϕR_3 kips LRFD	R_4/Ω kips/in. ASD	ϕR_4 kips/in. LRFD
W18×46	30.3	45.5	12.0	18.0	40.5	60.7	3.08	4.62
×40	24.3	36.5	10.5	15.8	30.9	46.3	2.40	3.60
×35	20.7	31.0	10.0	15.0	25.8	38.7	2.59	3.89
W16×100	67.8	102	19.5	29.3	107	160	8.64	13.0
×89	56.0	84.0	17.5	26.3	85.7	129	7.11	10.7
×77	44.0	66.0	15.2	22.8	64.4	96.7	5.43	8.14
×67	35.2	52.8	13.2	19.8	48.8	73.1	4.11	6.16
W16×57	40.1	60.2	14.3	21.5	57.4	86.1	4.90	7.35
×50	32.6	48.9	12.7	19.0	44.8	67.2	3.86	5.79
×45	27.8	41.7	11.5	17.3	36.7	55.0	3.26	4.89
×40	23.1	34.6	10.2	15.3	28.8	43.2	2.54	3.81
×36	20.5	30.7	9.83	14.8	25.3	38.0	2.71	4.07
W16×31	19.3	28.9	9.17	13.8	23.0	34.6	2.15	3.22
×26	15.6	23.3	8.33	12.5	17.7	26.5	2.08	3.13
W14×730	1410	2110	102	154	2870	4310	190	285
×665	1210	1810	94.3	142	2440	3660	168	252
×605	1030	1550	86.7	130	2060	3090	146	219
×550	877	1310	79.3	119	1730	2590	126	189
×500	748	1120	73.0	110	1460	2190	111	166
×455	641	962	67.3	101	1240	1860	97.6	146
×426	569	853	62.7	94.0	1080	1620	84.4	127
×398	507	761	59.0	88.5	957	1440	76.8	115
×370	451	676	55.3	83.0	840	1260	69.4	104
×342	394	591	51.3	77.0	723	1090	61.0	91.6
×311	336	504	47.0	70.5	606	909	52.4	78.6
×283	287	431	43.0	64.5	508	762	44.9	67.3
×257	245	367	39.3	59.0	424	637	38.3	57.4
×233	207	310	35.7	53.5	350	524	32.2	48.2
×211	176	265	32.7	49.0	292	438	27.8	41.6
×193	151	227	29.7	44.5	243	364	22.8	34.2
×176	132	198	27.7	41.5	208	313	20.7	31.1
×159	111	167	24.8	37.3	169	253	16.7	25.1
×145	95.8	144	22.7	34.0	141	211	14.1	21.1
W14×132	87.6	131	21.5	32.3	127	190	12.8	19.2
×120	75.7	114	19.7	29.5	106	159	10.9	16.3
×109	63.9	95.8	17.5	26.3	85.0	127	8.50	12.8
×99	55.8	83.7	16.2	24.3	71.8	108	7.44	11.2
×90	48.0	72.1	14.7	22.0	59.2	88.8	6.19	9.29

For R_1 and R_2		For R_3, R_4, R_5, R_6	
ASD	LRFD	ASD	LRFD
$\Omega = 1.50$	$\phi = 1.00$	$\Omega = 2.00$	$\phi = 0.75$

Table 9-4 (continued)
Beam Bearing Constants

F_y = 50 ksi

Nominal Wt.	R_5/Ω	ϕR_5	R_6/Ω	ϕR_6	(l_b = 3¼ in.) $x < d/2$		$d/2 \le x \le d$		$x > d$		V_{nx}/Ω_v	$\phi_v V_{nx}$
					R_n/Ω	ϕR_n	R_n/Ω	ϕR_n	R_n/Ω	ϕR_n		
	kips	kips	kips/in.	kips/in.	kips	kips	kips	kips	kips	kips	kips	kips
lb/ft	ASD	LRFD	ASD	LRFD	ASD	LRFD	ASD	LRFD	ASD	LRFD	ASD	LRFD
46	36.7	55.1	4.10	6.16	50.5	75.7	69.3	104	99.6	150	130	195
40	28.0	42.0	3.20	4.81	38.7	58.0	58.4	87.9	77.4	116	113	169
35	22.7	34.1	3.46	5.19	34.2	51.3	53.2	79.8	68.4	103	106	159
100	97.2	146	11.5	17.3	131	197	131	197	199	299	199	298
89	77.7	117	9.48	14.2	109	164	113	169	169	253	176	265
77	58.5	87.7	7.24	10.9	82.0	123	93.4	140	137	206	150	225
67	44.3	66.4	5.48	8.22	62.2	93.1	78.1	117	113	170	129	193
57	52.1	78.1	6.53	9.80	73.3	110	86.6	130	127	190	141	212
50	40.6	60.9	5.15	7.72	57.3	86.0	73.9	111	106	160	124	186
45	33.2	49.8	4.35	6.52	47.3	71.0	65.2	97.9	93.0	140	111	167
40	26.1	39.2	3.38	5.07	37.1	55.7	56.3	84.3	74.1	111	97.6	146
36	22.4	33.6	3.62	5.43	34.2	51.2	52.4	78.8	68.2	102	93.8	141
31	20.8	31.1	2.86	4.30	30.1	45.1	49.1	73.8	60.0	90.1	87.5	131
26	15.5	23.3	2.78	4.17	24.5	36.9	42.7	63.9	48.9	73.3	70.5	106
730	2590	3880	253	380	—	—	—	—	3150	4720	1380	2060
665	2200	3290	224	335	—	—	—	—	2730	4080	1220	1830
605	1860	2780	195	292	—	—	—	—	2340	3520	1090	1630
550	1560	2340	168	252	—	—	—	—	2010	3010	962	1440
500	1320	1970	147	221	—	—	—	—	1730	2600	858	1290
455	1120	1670	130	195	—	—	—	—	1500	2250	768	1150
426	977	1470	113	169	—	—	—	—	1340	2010	703	1050
398	864	1300	102	154	—	—	—	—	1210	1810	648	972
370	757	1140	92.5	139	—	—	—	—	1080	1620	594	891
342	652	978	81.4	122	561	841	561	841	955	1430	539	809
311	546	820	69.9	105	489	733	489	733	825	1240	482	723
283	458	687	59.8	89.7	427	641	427	641	714	1070	431	646
257	383	574	51.1	76.6	373	559	373	559	618	926	387	581
233	315	473	42.9	64.3	323	484	323	484	530	794	342	514
211	263	394	37.0	55.5	282	424	282	424	458	689	308	462
193	219	329	30.4	45.6	248	372	248	372	399	599	276	414
176	187	281	27.7	41.5	222	333	222	333	354	531	252	378
159	152	228	22.3	33.5	192	288	192	288	303	455	224	335
145	127	191	18.8	28.2	170	255	170	255	265	399	201	302
132	114	171	17.1	25.6	157	236	157	236	245	367	190	284
120	95.3	143	14.5	21.8	140	210	140	210	215	324	171	257
109	76.9	115	11.3	17.0	114	170	121	181	185	277	150	225
99	64.8	97.2	9.92	14.9	97.0	146	108	163	164	246	138	207
90	53.4	80.2	8.26	12.4	80.2	121	95.8	144	144	216	123	185

—Indicates that 3¼-in. bearing length is insufficient for end beam reactions since $l_b < k$.
l_b = length of bearing, in.
x = location of concentrated force with respect to the member end, in.

Table 9-4 (continued)
Beam Bearing Constants

F_y = 50 ksi

Shape	R_1/Ω kips ASD	ϕR_1 kips LRFD	R_2/Ω kips/in. ASD	ϕR_2 kips/in. LRFD	R_3/Ω kips ASD	ϕR_3 kips LRFD	R_4/Ω kips/in. ASD	ϕR_4 kips/in. LRFD
W14×82	61.6	92.4	17.0	25.5	81.1	122	7.84	11.8
×74	51.8	77.6	15.0	22.5	64.4	96.6	5.91	8.86
×68	45.3	68.0	13.8	20.8	54.6	81.9	5.12	7.68
×61	38.8	58.1	12.5	18.8	44.4	66.6	4.25	6.37
W14×53	38.5	57.8	12.3	18.5	44.0	66.1	3.99	5.98
×48	33.7	50.6	11.3	17.0	36.8	55.2	3.46	5.19
×43	28.5	42.7	10.2	15.3	29.5	44.3	2.82	4.23
W14×38	23.6	35.5	10.3	15.5	29.8	44.7	2.96	4.45
×34	20.3	30.5	9.50	14.3	24.7	37.1	2.63	3.94
×30	17.7	26.5	9.00	13.5	21.0	31.4	2.68	4.01
W14×26	17.4	26.1	8.50	12.8	20.1	30.1	2.05	3.08
×22	14.1	21.1	7.67	11.5	15.4	23.1	1.92	2.87
W12×336	527	790	59.3	89.0	984	1480	81.9	123
×305	448	672	54.3	81.5	825	1240	70.8	106
×279	391	587	51.0	76.5	716	1070	65.9	98.8
×252	333	499	46.7	70.0	598	898	57.2	85.8
×230	287	431	43.0	64.5	508	762	49.6	74.4
×210	246	369	39.3	59.0	426	638	42.5	63.8
×190	206	309	35.3	53.0	347	520	34.3	51.5
×170	173	259	32.0	48.0	283	424	29.3	43.9
×152	145	218	29.0	43.5	231	347	24.8	37.2
×136	122	183	26.3	39.5	189	284	21.3	31.9
×120	101	151	23.7	35.5	152	228	17.8	26.7
×106	80.8	121	20.3	30.5	114	171	12.8	19.3
×96	68.8	103	18.3	27.5	93.2	140	10.5	15.8
×87	60.5	90.8	17.2	25.8	80.1	120	9.75	14.6
×79	52.1	78.1	15.7	23.5	66.5	99.8	8.23	12.3
×72	45.5	68.3	14.3	21.5	55.6	83.4	6.97	10.5
×65	39.0	58.5	13.0	19.5	45.6	68.4	5.85	8.78
W12×58	37.2	55.8	12.0	18.0	41.6	62.4	4.32	6.48
×53	33.9	50.9	11.5	17.3	37.0	55.5	4.26	6.40
W12×50	35.2	52.7	12.3	18.5	43.4	65.0	4.69	7.03
×45	30.2	45.2	11.2	16.8	35.4	53.1	3.90	5.86
×40	25.1	37.6	9.83	14.8	27.7	41.5	3.03	4.54
W12×35	20.5	30.8	10.0	15.0	28.5	42.8	3.00	4.50
×30	16.0	24.1	8.67	13.0	21.2	31.8	2.35	3.52
×26	13.0	19.6	7.67	11.5	16.4	24.6	1.90	2.84

For R_1 and R_2		For R_3, R_4, R_5, R_6	
ASD	LRFD	ASD	LRFD
$\Omega = 1.50$	$\phi = 1.00$	$\Omega = 2.00$	$\phi = 0.75$

Table 9-4 (continued)
Beam Bearing Constants

F_y = 50 ksi

Nominal Wt.	R_5/Ω	ϕR_5	R_6/Ω	ϕR_6	(l_b = 3 1/4 in.) $x < d/2$		$d/2 \le x \le d$		$x > d$		V_{nx}/Ω_v	$\phi_v V_{nx}$
					R_n/Ω	ϕR_n	R_n/Ω	ϕR_n	R_n/Ω	ϕR_n		
	kips	kips	kips/in.	kips/in.	kips	kips	kips	kips	kips	kips	kips	kips
lb/ft	ASD	LRFD	ASD	LRFD	ASD	LRFD	ASD	LRFD	ASD	LRFD	ASD	LRFD
82	73.6	110	10.5	15.7	108	161	117	175	178	268	146	219
74	58.8	88.2	7.88	11.8	84.4	127	101	151	152	228	128	192
68	49.9	74.8	6.83	10.2	72.1	108	90.2	136	135	204	116	174
61	40.5	60.7	5.67	8.50	58.9	88.3	79.4	119	116	175	104	156
53	40.3	60.5	5.32	7.98	57.6	86.4	78.5	118	114	171	103	154
48	33.6	50.5	4.61	6.92	48.6	73.0	70.4	106	96.1	144	93.8	141
43	27.0	40.4	3.76	5.65	39.2	58.8	61.7	92.4	77.3	116	83.6	125
38	27.0	40.6	3.95	5.93	39.8	59.9	57.1	85.9	78.8	118	87.4	131
34	22.3	33.4	3.50	5.25	33.7	50.5	51.2	77.0	66.5	99.8	79.8	120
30	18.5	27.8	3.57	5.35	30.1	45.2	47.0	70.4	59.4	88.9	74.5	112
26	18.2	27.3	2.74	4.10	27.1	40.6	45.0	67.7	53.5	80.2	70.9	106
22	13.6	20.4	2.55	3.83	21.9	32.8	39.0	58.5	43.3	64.9	63.0	94.5
336	892	1340	109	164	—	—	—	—	1250	1870	598	897
305	748	1120	94.4	142	—	—	—	—	1070	1610	531	797
279	646	970	87.9	132	557	836	557	836	948	1420	487	730
252	540	809	76.3	114	485	727	485	727	818	1230	431	647
230	458	687	66.2	99.2	427	641	427	641	714	1070	390	584
210	384	576	56.7	85.0	374	561	374	561	620	930	347	520
190	314	471	45.8	68.7	321	481	321	481	527	790	305	458
170	256	383	39.0	58.5	277	415	277	415	450	674	269	403
152	209	313	33.1	49.6	239	359	239	359	384	577	238	358
136	170	255	28.4	42.5	207	311	207	311	329	494	212	318
120	136	204	23.7	35.6	178	266	178	266	279	417	186	279
106	103	155	17.1	25.7	147	220	147	220	228	341	157	236
96	84.3	126	14.0	21.0	128	192	128	192	197	295	140	210
87	72.0	108	13.0	19.5	114	171	116	175	177	265	129	193
79	59.7	89.6	11.0	16.5	95.5	143	103	154	155	233	117	175
72	49.9	74.8	9.29	13.9	80.1	120	92.0	138	137	206	106	159
65	40.9	61.4	7.81	11.7	66.3	99.4	81.3	122	120	180	94.4	142
58	38.1	57.2	5.76	8.63	56.8	85.2	76.2	114	111	167	87.8	132
53	33.6	50.3	5.69	8.53	52.1	78.0	71.3	107	102	153	83.5	125
50	39.5	59.3	6.25	9.37	59.8	89.8	75.2	113	110	166	90.3	135
45	32.3	48.4	5.21	7.81	49.2	73.8	66.6	99.8	96.2	144	81.1	122
40	25.3	37.9	4.04	6.05	38.4	57.6	57.0	85.7	75.1	113	70.2	105
35	26.0	39.1	4.00	6.00	39.0	58.6	53.0	79.6	73.5	110	75.0	113
30	19.3	28.9	3.13	4.69	29.5	44.1	44.2	66.4	57.7	86.5	64.0	95.9
26	14.8	22.3	2.53	3.79	23.0	34.6	37.9	57.0	45.2	67.7	56.1	84.2

—Indicates that 3 1/4-in. bearing length is insufficient for end beam reactions since $l_b < k$.
l_b = length of bearing, in.
x = location of concentrated force with respect to the member end, in.

Table 9-4 (continued)
Beam Bearing Constants

F_y = 50 ksi

Shape	R_1/Ω kips ASD	ϕR_1 kips LRFD	R_2/Ω kips/in. ASD	ϕR_2 kips/in. LRFD	R_3/Ω kips ASD	ϕR_3 kips LRFD	R_4/Ω kips/in. ASD	ϕR_4 kips/in. LRFD
W12×22	15.7	23.6	8.67	13.0	20.8	31.2	2.43	3.64
×19	12.7	19.1	7.83	11.8	16.2	24.3	2.20	3.29
×16	10.4	15.5	7.33	11.0	12.8	19.2	2.42	3.63
×14	8.75	13.1	6.67	10.0	10.2	15.3	2.16	3.24
W10×112	110	165	25.2	37.8	177	265	21.8	32.7
×100	91.8	138	22.7	34.0	143	214	18.3	27.4
×88	75.1	113	20.2	30.3	113	169	15.0	22.4
×77	60.5	90.8	17.7	26.5	86.7	130	11.7	17.5
×68	49.7	74.6	15.7	23.5	68.1	102	9.37	14.1
×60	41.3	62.0	14.0	21.0	54.1	81.1	7.72	11.6
×54	34.5	51.8	12.3	18.5	42.5	63.8	5.89	8.84
×49	30.0	45.1	11.3	17.0	35.7	53.6	5.07	7.61
W10×45	32.7	49.0	11.7	17.5	39.3	58.9	4.95	7.42
×39	27.0	40.6	10.5	15.8	31.0	46.5	4.30	6.44
×33	22.6	33.9	9.67	14.5	24.8	37.2	4.16	6.24
W10×30	20.3	30.4	10.0	15.0	28.3	42.4	3.64	5.46
×26	16.0	24.1	8.67	13.0	21.2	31.8	2.80	4.20
×22	13.2	19.8	8.00	12.0	17.0	25.5	2.72	4.08
W10×19	14.5	21.7	8.33	12.5	18.9	28.4	2.80	4.20
×17	12.6	18.9	8.00	12.0	16.3	24.4	3.00	4.49
×15	10.9	16.4	7.67	11.5	13.8	20.7	3.26	4.89
×12	8.08	12.1	6.33	9.50	9.14	13.7	2.39	3.59
W8×67	63.2	94.8	19.0	28.5	100	150	15.9	23.9
×58	51.0	76.5	17.0	25.5	78.9	118	13.5	20.3
×48	36.0	54.0	13.3	20.0	50.4	75.6	7.94	11.9
×40	28.6	42.9	12.0	18.0	38.9	58.4	7.30	10.9
×35	23.0	34.4	10.3	15.5	29.2	43.9	5.35	8.03
×31	19.7	29.5	9.50	14.3	24.2	36.3	4.81	7.21
W8×28	20.4	30.6	9.50	14.3	25.0	37.5	4.46	6.69
×24	16.2	24.3	8.17	12.3	18.5	27.7	3.35	5.02
W8×21	14.6	21.9	8.33	12.5	19.0	28.6	3.41	5.11
×18	12.1	18.1	7.67	11.5	15.3	22.9	3.27	4.91
W8×15	12.6	18.8	8.17	12.3	16.4	24.6	4.16	6.24
×13	10.6	16.0	7.67	11.5	13.4	20.1	4.31	6.47
×10	7.15	10.7	5.67	8.50	7.64	11.5	2.19	3.29

For R_1 and R_2		For R_3, R_4, R_5, R_6	
ASD	LRFD	ASD	LRFD
$\Omega = 1.50$	$\phi = 1.00$	$\Omega = 2.00$	$\phi = 0.75$

Table 9-4 (continued)
Beam Bearing Constants

F_y = 50 ksi

Nominal Wt.	R_5/Ω	ϕR_5	R_6/Ω	ϕR_6	(l_b = 3¼ in.) $x < d/2$		$d/2 \le x \le d$		$x > d$		V_{nx}/Ω_v	$\phi_v V_{nx}$
					R_n/Ω	ϕR_n	R_n/Ω	ϕR_n	R_n/Ω	ϕR_n		
	kips	kips	kips/in.	kips/in.	kips	kips	kips	kips	kips	kips	kips	kips
lb/ft	ASD	LRFD	ASD	LRFD	ASD	LRFD	ASD	LRFD	ASD	LRFD	ASD	LRFD
22	18.8	28.2	3.24	4.86	29.3	44.0	43.9	65.9	57.4	86.1	64.0	95.9
19	14.4	21.7	2.93	4.39	23.9	36.0	38.1	57.5	46.7	70.0	57.3	86.0
16	10.9	16.3	3.23	4.84	21.4	32.0	34.2	51.3	41.3	62.0	52.8	79.2
14	8.51	12.8	2.88	4.32	17.9	26.8	30.4	45.6	34.4	51.7	42.8	64.3
112	160	240	29.1	43.6	192	288	192	288	302	453	172	258
100	129	194	24.4	36.5	166	249	166	249	257	387	151	226
88	102	153	20.0	29.9	141	211	141	211	216	324	131	196
77	78.4	118	15.6	23.3	118	177	118	177	179	268	112	169
68	61.6	92.4	12.5	18.7	101	151	101	151	150	226	97.8	147
60	48.8	73.2	10.3	15.4	82.3	123	86.8	130	128	192	85.7	129
54	38.5	57.8	7.86	11.8	64.0	96.2	74.5	112	109	164	74.7	112
49	32.3	48.5	6.76	10.1	54.3	81.3	66.7	100	96.7	145	68.0	102
45	35.9	53.9	6.60	9.89	57.4	86.0	70.7	106	103	155	70.7	106
39	28.2	42.2	5.73	8.59	46.8	70.1	61.1	92.0	88.1	133	62.5	93.7
33	22.1	33.2	5.55	8.33	40.1	60.3	54.0	81.0	76.6	115	56.4	84.7
30	25.7	38.6	4.86	7.29	41.5	62.3	52.8	79.2	73.1	110	63.0	94.5
26	19.3	28.9	3.74	5.60	31.5	47.1	44.2	66.4	60.2	90.5	53.6	80.3
22	15.1	22.7	3.63	5.44	26.9	40.4	39.2	58.8	51.7	77.5	49.0	73.4
19	17.0	25.5	3.74	5.60	29.2	43.7	41.6	62.3	56.0	84.0	51.0	76.5
17	14.2	21.4	4.00	5.99	27.2	40.9	38.6	57.9	51.2	76.8	48.5	72.7
15	11.6	17.4	4.35	6.52	25.7	38.6	35.8	53.8	46.7	70.2	46.0	68.9
12	7.57	11.4	3.19	4.78	17.9	26.9	28.7	43.0	33.8	50.7	37.5	56.3
67	90.7	136	21.2	31.8	125	187	125	187	188	282	103	154
58	71.1	107	18.0	27.0	106	159	106	159	157	236	89.3	134
48	45.9	68.9	10.6	15.9	79.2	119	79.2	119	115	173	68.0	102
40	34.9	52.4	9.73	14.6	66.5	99.9	67.6	101	96.2	144	59.4	89.1
35	26.3	39.5	7.14	10.7	49.5	74.3	56.5	84.8	79.5	119	50.3	75.5
31	21.6	32.4	6.41	9.61	42.4	63.6	50.6	76.0	70.3	105	45.6	68.4
28	22.6	33.9	5.95	8.93	41.9	62.9	51.3	77.1	71.7	108	45.9	68.9
24	16.7	25.1	4.47	6.70	31.2	46.9	42.8	64.3	58.8	88.0	38.9	58.3
21	17.2	25.7	4.54	6.82	32.0	47.9	41.7	62.5	56.3	84.4	41.4	62.1
18	13.5	20.2	4.36	6.55	27.7	41.5	37.0	55.5	49.1	73.6	37.4	56.2
15	14.1	21.2	5.55	8.32	32.1	48.2	39.2	58.8	51.8	77.6	39.7	59.6
13	11.1	16.7	5.75	8.63	29.8	44.7	35.5	53.4	46.1	69.4	36.8	55.1
10	6.49	9.73	2.93	4.39	16.0	24.0	25.6	38.3	29.5	44.4	26.8	40.2

l_b = length of bearing, in.
x = location of concentrated force with respect to the member end, in.

PART 10

DESIGN OF SIMPLE SHEAR CONNECTIONS

SCOPE 10–4
FORCE TRANSFER 10–4
COMPARING CONNECTION ALTERNATIVES 10–5
Two-Sided Connections 10–5
Seated Connections 10–5
One-Sided Connections 10–5
CONSTRUCTABILITY CONSIDERATIONS 10–5
Double Connections 10–6
Accessibility in Column Webs 10–7
Field-Welded Connections 10–7
Riding the Fillet 10–7
DOUBLE-ANGLE CONNECTIONS 10–7
Available Strength 10–9
Recommended Angle Length and Thickness 10–9
Shop and Field Practices 10–9
DESIGN TABLE DISCUSSION (TABLES 10-1, 10-2 AND 10-3) 10–9
Table 10-1. All-Bolted Double-Angle Connections 10–13
Table 10-2. Available Weld Strength of Bolted/Welded Double-Angle Connections 10–46
Table 10-3. Available Weld Strength of All-Welded Double-Angle Connections 10–47
SHEAR END-PLATE CONNECTIONS 10–49
Design Checks 10–49
Recommended End-Plate Dimensions and Thickness 10–49
Shop and Field Practices 10–49
DESIGN TABLE DISCUSSION (TABLE 10-4) 10–50
Table 10-4. Bolted/Welded Shear End-Plate Connections 10–51
UNSTIFFENED SEATED CONNECTIONS 10–84
Design Checks 10–85
Shop and Field Practices 10–85
Bolted/Welded Unstiffened Seated Connections 10–85

DESIGN TABLE DISCUSSION (TABLES 10-5 AND 10-6) 10–85
Table 10-5. All-Bolted Unstiffened Seated Connections 10–89
Table 10-6. All-Welded Unstiffened Seated Connections 10–91
STIFFENED SEATED CONNECTIONS 10–93
Design Checks 10–94
Shop and Field Practices 10–95
DESIGN TABLE DISCUSSION (TABLES 10-7 AND 10-8) 10–95
Table 10-7. All-Bolted Stiffened Seated Connections 10–97
Table 10-8. Bolted/Welded Stiffened Seated Connections 10–98
SINGLE-PLATE CONNECTIONS 10–102
Design Checks 10–102
Conventional Configuration 10–102
Dimensional Limitations 10–102
Design Checks 10–103
Table 10-9. Design Values for Conventional Single-Plate Shear Connections 10–103
Extended Configuration 10–103
Dimensional Limitations 10–104
Design Checks 10–104
Requirement for Stabilizer Plates 10–105
Recommended Plate Length 10–106
Shop and Field Practices 10–106
DESIGN TABLE DISCUSSION (TABLE 10-10) 10–107
Table 10-10. Single-Plate Connections 10–108
SINGLE-ANGLE CONNECTIONS 10–132
Design Checks 10–133
Recommended Angle Length and Thickness 10–133
Shop and Field Practices 10–133
DESIGN TABLE DISCUSSION (TABLES 10-11 AND 10-12) 10–134
Table 10-11. All-Bolted Single-Angle Connections 10–135
Table 10-12. Bolted/Welded Single-Angle Connections 10–136
TEE CONNECTIONS 10–138
Design Checks 10–138
Recommended Tee Length and Flange and Web Thicknesses 10–139
Shop and Field Practices 10–139
SHEAR SPLICES 10–139

SPECIAL CONSIDERATIONS FOR SIMPLE SHEAR CONNECTIONS 10–141
Simple Shear Connections Subject to Axial Forces 10–141
Simple Shear Connections at Stiffened Column-Web Locations 10–141
Eccentric Effect of Extended Gages 10–143
Column-Web Supports 10–143
Girder-Web Supports 10–146
Alternative Treatment of Eccentric Moment 10–147
Double Connections 10–147
Supported Beams of Different Nominal Depths 10–147
Supported Beams Offset Laterally 10–147
Beams Offset from Column Centerline 10–147
Framing to the Column Flange from the Strong Axis 10–147
Framing to the Column Flange from the Weak Axis 10–150
Framing to the Column Web 10–153
Connections for Raised Beams 10–153
Non-Rectangular Simple Shear Connections 10–157
Skewed Connections 10–159
Sloped Connections 10–162
Canted Connections 10–164
Inclines in Two or More Directions (Hip and Valley Framing) 10–166
DESIGN CONSIDERATIONS FOR SIMPLE SHEAR CONNECTIONS TO HSS COLUMNS 10–167
Double-Angle Connections to HSS 10–167
Single-Plate Connections to HSS 10–167
Unstiffened Seated Connections to HSS 10–167
Stiffened Seated Connections to HSS 10–168
Through-Plate Connections 10–168
Single-Angle Connections 10–169
DESIGN TABLE DISCUSSION (TABLES 10-13, 10-14A, 10-14B, 10-14C AND 10-15) 10–169
Table 10-13. Minimum Inside Radius for Cold-Blending 10–172
Table 10-14A. Clearances for All-Bolted Skewed Connections 10–173
Table 10-14B. Clearances for Bolted/Welded Skewed Connections 10–174
Table 10-14C. Welding Details for Skewed Single-Plate Connections 10–176
Table 10-15. Required Length and Thickness for Stiffened Seated Connections to HSS 10–178
PART 10 REFERENCES 10–181

SCOPE

The specification requirements and other design considerations summarized in this Part apply to the design of simple shear connections. For the design of partially restrained moment connections, see Part 11. For the design of fully restrained (FR) moment connections, see Part 12.

FORCE TRANSFER

The required strength (end reaction), R_u or R_a, is determined by analysis as indicated in AISC *Specification* Section B3.6a. Per AISC *Specification* Section J1.2, the ends of members with simple shear connections are normally assumed to be free to rotate under load. While simple shear connections do actually possess some rotational restraint (see curve A in Figure 10-1), this small amount can be neglected and the connection idealized as completely flexible. The simple shear connections shown in this Manual are suitable to accommodate the end rotations required per AISC *Specification* Section J1.2.

Support rotation is acceptably limited for most framing details involving simple shear connections without explicit consideration. The case of a bare spandrel girder supporting infill beams, however, may require consideration to verify that an acceptable level of support rotational stiffness is present. Sumner (2003) showed that a nominal interconnection between

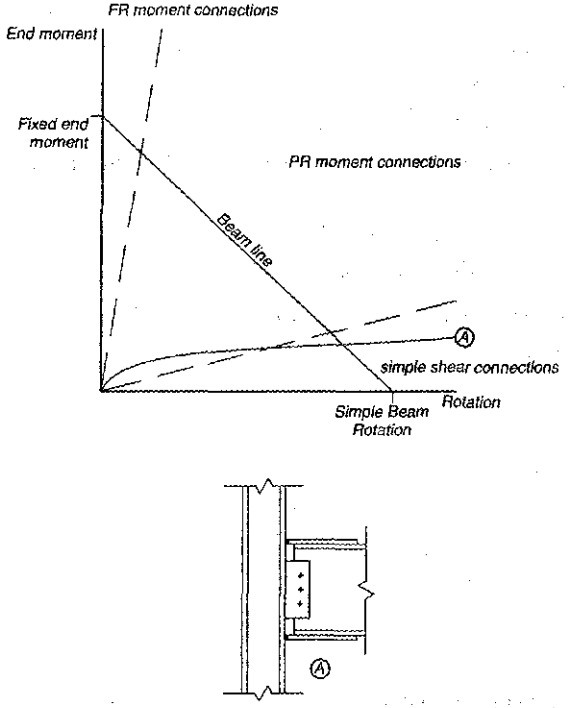

Fig. 10-1. Illustration of typical moment rotation curve for simple shear connection.

the top flange of the girder and the top flange of the framing beam is sufficient to limit support rotation.

COMPARING CONNECTION ALTERNATIVES

Two-Sided Connections

Two-sided connections, such as double-angle and shear end-plate connections, offer the following advantages:

1. suitability for use when the end reaction is large;
2. compact connections (usually, the entire connection is contained within the flanges of the supported beam); and,
3. eccentricity perpendicular to the beam axis need not be considered for workable gages (see Table 1-7A).

Note that two-sided connections may require additional consideration for erectability, as discussed in "Constructability Considerations" below.

Seated Connections

Unstiffened and stiffened seated connections offer the following advantages:

1. seats can be shop attached to the support, simplifying erection;
2. ample erection clearance is provided;
3. excellent safety during erection since double connections often can be eliminated; and,
4. the bay length of the structure is easily maintained (seated connections may be preferable when maintaining bay length is a concern for repetitive bays of framing).

One-Sided Connections

One-sided connections such as single-plate, single-angle and tee connections offer the following advantages:

1. shop attachment of connection elements to the support, simplifying shop fabrication and erection;
2. reduced material and shop labor requirements;
3. ample erection clearance is provided; and,
4. excellent safety during erection since double connections often can be eliminated.

CONSTRUCTABILITY CONSIDERATIONS

Double Connections

A double connection occurs in field-bolted construction when beams or girders frame opposite each other. Double connections are a safety concern when they occur in the web of a column (see Figure 10-2) or the web of a beam that frames continuously over the top of a column[1] and all field bolts take the same open holes. A positive connection must be made

[1]This requirement applies only at the location of the column, not at locations away from the column.

and maintained for the first member to be erected while the second member to be erected is brought into its final position. Conditions requiring the connector to hang one beam temporarily on a partially inserted bolt or drift pin are not allowed by OSHA.

Framing details can be configured using staggered angles or other similar details to provide a means to make a positive connection for the first member while the second member is brought into its final position. Alternatively, a temporary erection seat, as shown in Figure 10-2, can be provided. The erection seat, usually an angle, is sized and attached to the column web to support the dead weight of the member, unless additional loading is indicated in the contract documents. It is located to clear the bottom flange of the supported member by approximately $^3/_8$ in. to accommodate mill, fabrication and erection tolerances.

The sequence of erection is most important in determining the need for erection seats. If the erection sequence is known, the erection seat is provided on the side needing the support. If the erection sequence is not known, a seat can be provided on both sides of the column web. Temporary erection seats may be reused at other locations after the connection(s) are made, but need not be removed unless they create an interference or removal is required in the contract documents.

See also the discussion under "Special Considerations for Simple Shear Connections."

Accessibility in Column Webs

Because of bolting and welding clearances, double-angle, shear end-plate, single-plate, single-angle, and tee shear connections may not be suitable for connections to the webs of W-shape and similar columns, particularly for W8 columns, unless gages are reduced. Such connections may be impossible for W6, W5 and W4 columns.

There is also an accessibility concern for entering and tightening the field bolts when the connection material is shop-attached to the supporting column web and contained within the column flanges.

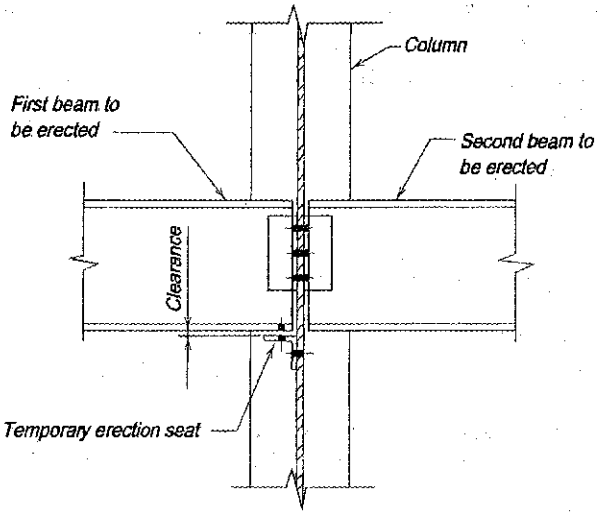

Fig. 10-2. Erection seat.

Field-Welded Connections

In field-welded connections, temporary erection bolts are usually provided to support the member until final welding is performed. A minimum of two bolts (one bolt in bracing members) must be placed for erection safety per OSHA requirements. Additional erection bolts may be required for loads during erection, to assist in pulling the connection angles up tightly against the web of the supporting beam prior to welding or for other reasons. Temporary erection bolts may be reused at other locations after final welding, but need not be removed unless they create an interference or removal is required in the contract documents.

Riding the Fillet

The detailed dimensions of connection elements must be compatible with the *T*-dimension of an uncoped beam and the remaining web depth of a coped beam. Note that the element may encroach upon the fillet(s), as given in Figure 10-3.

DOUBLE-ANGLE CONNECTIONS

A double-angle connection is made with two angles, one on each side of the web of the beam to be supported, as illustrated in Figure 10-4. These angles may be bolted or welded to the supported beam as well as to the supporting member.

When the angles are welded to the support, adequate flexibility must be provided in the connection. As illustrated in Figure 10-4(c), line welds are placed along the toes of the angles with a return at the top per AISC *Specification* Section J2.2b. Note that welding across the entire top of the angles must be avoided as it inhibits the flexibility and, therefore, the necessary end rotation of the connection. The performance of the resulting connection would not be as intended for simple shear connections.

Available Strength

The available strength of a double-angle connection is determined from the applicable limit states for bolts (see Part 7), welds (see Part 8), and connecting elements (see Part 9). In all cases, the available strength, ϕR_n or R_n/Ω, must equal or exceed the required strength, R_u or R_a.

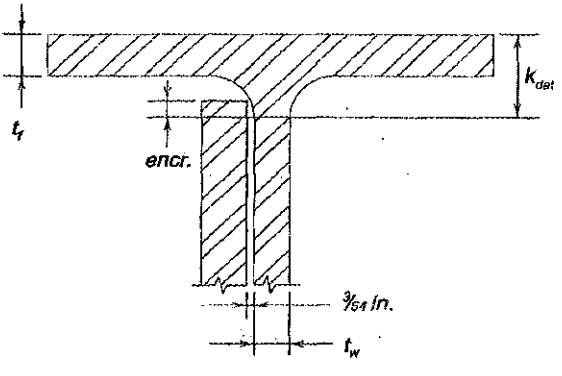

$k_{det} - t_f$	Encr.
in.	in.
5/16	1/8
3/8 to 1/2	3/16
9/16 to 13/16	1/4
7/8 to 1 1/4	5/16
1 5/16 and 1 3/8	3/8

Fig. 10-3. Fillet encroachment (riding the fillet).

For standard or short-slotted holes, eccentricity on the supported side of double angle connections may be neglected for gages [distance from the face of the outstanding angle legs to the centerline of the vertical bolt row, shown as dimension a in Figure 10-4(a)] not exceeding 3 in., except in the case of a double vertical row of bolts through the web of the supported beam. Eccentricity should always be considered in the design of welds for double-angle connections.

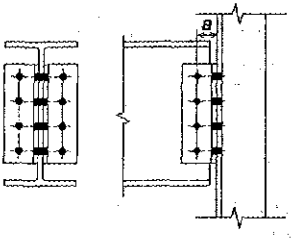

(a) All-bolted

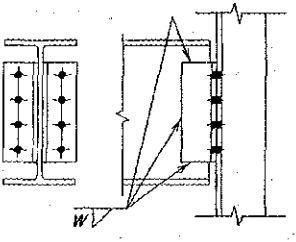

(b) Bolted/welded, angles welded to support beam

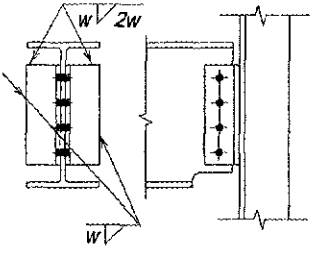

Note: weld returns on top of angles per Specification Section J2.2b.

(c) Bolted/welded, angles welded to support

Fig. 10-4. Double-angle connections.

Recommended Angle Length and Thickness

To provide for stability during erection, it is recommended that the minimum angle length be one-half the T-dimension of the beam to be supported. The maximum length of the connection angles must be compatible with the T-dimension of an uncoped beam and the remaining web depth of a coped beam. Note that the element may encroach upon the fillet(s), as given in Figure 10-3.

To provide for flexibility, the maximum angle thickness for use with workable gages should be limited to $^5/_8$ in. Alternatively, the shear-connection ductility checks illustrated in Part 9 can be used to justify other combinations of gage and angle thickness.

Shop and Field Practices

When framing to a girder web, both angles are usually shop-attached to the web of the supported beam. When framing to a column web, both angles should be shop-attached to the supported beam, when possible, and the associated constructability considerations should be addressed (see the preceding discussion under "Constructability Considerations").

When framing to a column flange, both angles can be shop-attached to the column flange or the supported beam. In the former case, this is a knifed connection, as illustrated in Figure 10-4(c), which requires an erection clearance, as illustrated in Figure 10-5(a), and that the bottom flange be coped. Also, provision must be made for possible mill variation in the depth of the columns, particularly in fairly long runs (i.e., six or more bays of framing). If both angles are shop-attached to the beam web, the beam length can be shortened to provide for mill overrun with shims furnished at the appropriate intervals to fill the resulting gaps or to provide for mill underrun. If both angles are shop-attached to the column flange, the erected beam is knifed into place and play in the open holes is normally sufficient to provide for the necessary adjustment. Alternatively, short-slotted holes can also be used.

When special requirements preclude the use of any of the foregoing practices, one angle could be shop-attached to the support and the other shipped loose. In this case, the spread between the outstanding legs should equal the decimal beam web thickness plus a clearance that will produce an opening to the next higher $^1/_{16}$-in. increment, as illustrated in Figure 10-5(b). Alternatively, short-slotted holes in the support leg of the angle eliminate the need to provide for variations in web thickness. Note that the practice of shipping one angle loose is not desirable because it requires additional material handling as well as added erection costs and complexity.

DESIGN TABLE DISCUSSION (TABLES 10-1, 10-2 AND 10-3)

Table 10-1. All-Bolted Double-Angle Connections

Table 10-1 is a design aid for all-bolted double-angle connections. Available strengths are tabulated for supported and supporting member material with $F_y = 50$ ksi and $F_u = 65$ ksi and angle material with $F_y = 36$ ksi and $F_u = 58$ ksi. Eccentricity effects on the supported (beam) side of the connections are neglected, as discussed previously for gages not exceeding 3 in. All values, including slip-critical bolt available strengths, are for comparison with the governing LRFD or ASD load combination.

Tabulated bolt and angle available strengths consider the limit states of bolt shear, bolt bearing on the angles, shear yielding of the angles, shear rupture of the angles, and block

shear rupture of the angles. Values are tabulated for 2 through 12 rows of $^3/_4$-in.-, $^7/_8$-in.- and 1-in.-diameter Group A and Group B bolts (as defined in AISC *Specification* Section J3.1) at 3-in. spacing. For calculation purposes, angle edge distances, L_{ev} and L_{eh}, are assumed to be $1^1/_4$ in.

Tabulated beam web available strengths, per in. of web thickness, consider the limit state of bolt bearing on the beam web. For beams coped at the top flange only, the limit state of block shear rupture is also considered. Additionally, for beams coped at both the top and bottom flanges, the tabulated values consider the limit states of shear yielding and shear rupture of the beam web. Values are tabulated for beam web edge distances, L_{ev}, from $1^1/_4$ in. to 3 in. and for beam end distances, L_{eh}, of $1^1/_2$ in. and $1^3/_4$ in. For calculation purposes, these end distances have been reduced to $1^1/_4$ in. and $1^1/_2$ in., respectively, to account for possible underrun in beam length. For coped members, the limit states of flexural yielding and local buckling must be checked independently per Part 9. When required, web reinforcement of coped members is treated as in Part 9.

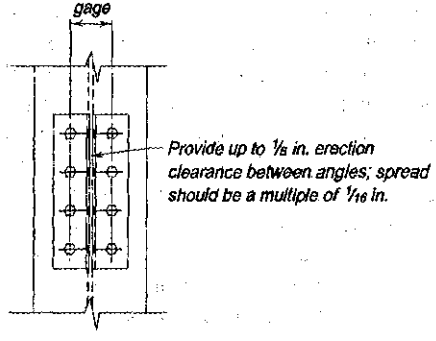

(a) Both angles shop attached to the column flange (beam knifed into place)

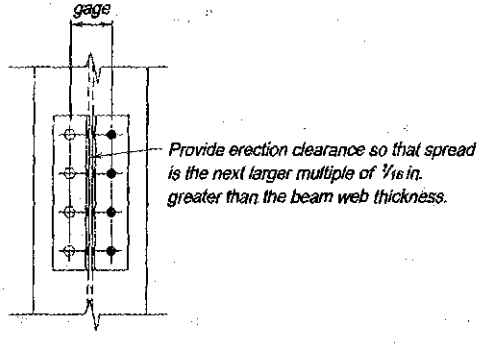

(b) One shop attached to the column flange, other shipped loose

Fig. 10-5. Erection clearances for double-angle connections.

Tabulated supporting member available strengths, per in. of flange or web thickness, consider the limit state of bolt bearing on the support. Note that resistance and safety factors are not noted in these tables, as they vary by limit state.

Table 10-2. Available Weld Strength of Bolted/Welded Double-Angle Connections

Table 10-2 is a design aid arranged to permit substitution of welds for bolts in connections designed with Table 10-1. Electrode strength is assumed to be 70 ksi. Holes for erection bolts may be placed as required in angle legs that are to be field-welded.

Welds A may be used in place of bolts through the supported-beam web legs of the double angles or welds B may be used in place of bolts through the support legs of the double angles. Although it is permissible to use welds A and B from Table 10-2 in combination to obtain all-welded connections, it is recommended that such connections be selected from Table 10-3. This table will allow increased flexibility in the selection of angle lengths and connection strengths because Table 10-2 conforms to the bolt spacing and edge distance requirements for the all-bolted double-angle connections of Table 10-1.

Weld available strengths are tabulated for the limit state of weld shear. Available strengths for welds A are determined by the instantaneous center of rotation method using Table 8-8 with $\theta = 0°$. Available strengths for welds B are determined by the elastic method. With the neutral axis assumed at one-sixth the depth of the angles measured downward and the tops of the angles in compression against each other through the beam web, the available strength, ϕR_n or R_n/Ω, of these welds is determined by

LRFD	ASD
$\phi R_n = 2\left(\frac{1.392DL}{\sqrt{1+\frac{12.96e^2}{L^2}}}\right)$ (10-1a)	$\frac{R_n}{\Omega} = 2\left(\frac{0.928DL}{\sqrt{1+\frac{12.96e^2}{L^2}}}\right)$ (10-1b)

where

D = number of sixteenths-of-an-inch in the weld size

L = length of the connection angles, in.

e = width of the leg of the connection angle attached to the support, in.

Note that $\phi = 0.75$ is included in the right hand side of Equation 10-1a and $\Omega = 2.00$ is included in the right hand side of Equation 10-1b.

The tabulated minimum thicknesses of the supported beam web for welds A and the support for welds B match the shear rupture strength of these elements with the strength of the weld metal. As derived in Part 9, the minimum supported beam web thickness for welds A (two lines of weld) is

$$t_{min} = \frac{6.19D}{F_u} \qquad (9\text{-}3)$$

and the minimum supporting flange or web thickness for welds B (one line of weld) is

$$t_{min} = \frac{3.09D}{F_u} \tag{9-2}$$

When welds B line up on opposite sides of the support, the minimum thickness is the sum of the thicknesses required for each weld. In either case, when less than the minimum material thickness is present, the tabulated weld available strength must be reduced by the ratio of the thickness provided to the minimum thickness.

When Table 10-2 is used, the minimum angle thickness is the weld size plus $^1/_{16}$ in., but not less than the angle thickness determined from Table 10-1. The angle length, L, must be as tabulated in Table 10-2. In general, 2L4×3$^1/_2$ will accommodate workable gages, with the 4-in. leg attached to the supporting member. The width of web legs in Case I (web legs welded and outstanding legs bolted) may be optionally reduced from 3$^1/_2$ in. to 3 in. The width of outstanding legs in Case II (web legs bolted and outstanding legs welded) may be optionally reduced from 4 in. to 3 in. for values of L from 5$^1/_2$ through 17$^1/_2$ in.

Table 10-3. Available Weld Strength of All-Welded Double-Angle Connections

Table 10-3 is a design aid for all-welded double-angle connections. Electrode strength is assumed to be 70 ksi. Holes for erection bolts may be placed as required in angle legs that are to be field-welded.

Weld available strengths are tabulated for the limit state of weld shear. Available strengths for welds A are determined by the instantaneous center of rotation method using Table 8-8 with $\theta = 0°$. Available strengths for welds B are determined by the elastic method as discussed previously for bolted/welded double-angle connections.

The tabulated minimum thicknesses of the supported beam web for welds A and the support for welds B match the shear rupture strength of these elements with the strength of the weld metal and are determined as discussed previously for Table 10-2. When welds B line up on opposite sides of the support, the minimum thickness is the sum of the thicknesses required for each weld. When less than the minimum material thickness is present, the tabulated weld available strength must be reduced by the ratio of the thickness provided to the minimum thickness.

When Table 10-3 is used, the minimum angle thickness must be equal to the weld size plus $^1/_{16}$ in. The angle length, L, must be as tabulated in Table 10-3. 2L4×3$^1/_2$ should be used for angle lengths equal to or greater than 18 in. For angle length less than 18 in., the 4-in. leg can be reduced to 3 in.

Beam F_y = 50 ksi, F_u = 65 ksi
Angle F_y = 36 ksi, F_u = 58 ksi

Table 10-1
All-Bolted Double-Angle Connections

3/4-in. Bolts

Bolt and Angle Available Strength, kips

12 Rows W44	Bolt Group	Thread Cond.	Hole Type	Angle Thickness, in. 1/4 ASD	1/4 LRFD	5/16 ASD	5/16 LRFD	3/8 ASD	3/8 LRFD	1/2 ASD	1/2 LRFD
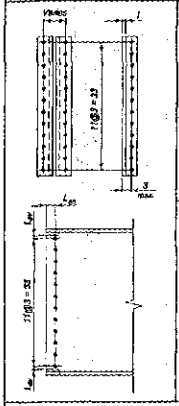	Group A	N	STD	197	295	246	369	286	430	286	430
		X	STD	197	295	246	369	295	443	361	541
		SC Class A	STD	152	228	152	228	152	228	152	228
			OVS	129	194	129	194	129	194	129	194
			SSLT	152	228	152	228	152	228	152	228
		SC Class B	STD	197	295	246	369	253	380	253	380
			OVS	196	294	216	323	216	323	216	323
			SSLT	195	293	244	366	253	380	253	380
	Group B	N	STD	197	295	246	369	295	443	361	541
		X	STD	197	295	246	369	295	443	393	590
		SC Class A	STD	190	285	190	285	190	285	190	285
			OVS	162	242	162	242	162	242	162	242
			SSLT	190	285	190	285	190	285	190	285
		SC Class B	STD	197	295	246	369	295	443	316	475
			OVS	196	294	245	367	270	403	270	403
			SSLT	195	293	244	366	293	440	316	475

Beam Web Available Strength per Inch Thickness, kips/in.

Hole Type	L_{ev}, in.	STD L_{eh}*, in. 1 1/2 ASD	1 1/2 LRFD	1 3/4 ASD	1 3/4 LRFD	OVS L_{eh}*, in. 1 1/2 ASD	1 1/2 LRFD	1 3/4 ASD	1 3/4 LRFD	SSLT L_{eh}*, in. 1 1/2 ASD	1 1/2 LRFD	1 3/4 ASD	1 3/4 LRFD
Coped at Top Flange Only	1 1/4	498	747	506	759	468	702	476	714	495	743	503	755
	1 3/8	501	751	509	763	470	706	479	718	497	746	506	758
	1 1/2	503	754	511	767	473	709	481	722	500	750	508	762
	1 5/8	505	758	514	770	475	713	483	725	502	753	510	766
	2	513	769	521	781	483	724	491	736	510	764	518	777
	3	532	798	540	810	502	753	510	765	529	794	537	806
Coped at Both Flanges	1 1/4	488	731	488	731	458	687	458	687	488	731	488	731
	1 3/8	492	739	492	739	463	695	463	695	492	739	492	739
	1 1/2	497	746	497	746	468	702	468	702	497	746	497	746
	1 5/8	502	753	502	753	473	709	473	709	502	753	502	753
	2	513	769	517	775	483	724	488	731	510	764	517	775
	3	532	798	540	810	502	753	510	765	529	794	537	806
Uncoped		702	1050	702	1050	702	1050	702	1050	702	1050	702	1050

Support Available Strength per Inch Thickness, kips/in.

Hole Type	ASD	LRFD
STD/ OVS/ SSLT	1400	2110

Notes:
STD = Standard holes
OVS = Oversized holes
SSLT = Short-slotted holes transverse to direction of load
N = Threads included
X = Threads excluded
SC = Slip critical

* Tabulated values include 1/4-in. reduction in end distance, L_{eh}, to account for possible underrun in beam length.

Note: Slip-critical bolt values assume no more than one filler has been provided or bolts have been added to distribute loads in the fillers.

Beam F_y = 50 ksi, F_u = 65 ksi
Angle F_y = 36 ksi, F_u = 58 ksi

Table 10-1 (continued)
All-Bolted Double-Angle Connections

3/4-in. Bolts

Bolt and Angle Available Strength, kips

11 Rows W44, 40	Bolt Group	Thread Cond.	Hole Type	Angle Thickness, in. 1/4 ASD	1/4 LRFD	3/16 ASD	3/16 LRFD	3/8 ASD	3/8 LRFD	1/2 ASD	1/2 LRFD
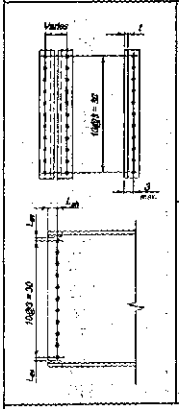	Group A	N	STD	181	271	226	338	263	394	263	394
		X	STD	181	271	226	338	271	406	331	496
		SC Class A	STD	139	209	139	209	139	209	139	209
			OVS	119	178	119	178	119	178	119	178
			SSLT	139	209	139	209	139	209	139	209
		SC Class B	STD	181	271	226	338	232	348	232	348
			OVS	180	269	198	296	198	296	198	296
			SSLT	179	269	224	336	232	348	232	348
	Group B	N	STD	181	271	226	338	271	406	331	496
		X	STD	181	271	226	338	271	406	361	542
		SC Class A	STD	174	261	174	261	174	261	174	261
			OVS	148	222	148	222	148	222	148	222
			SSLT	174	261	174	261	174	261	174	261
		SC Class B	STD	181	271	226	338	271	406	290	435
			OVS	180	269	225	337	247	370	247	370
			SSLT	179	269	224	336	269	403	290	435

Beam Web Available Strength per Inch Thickness, kips/in.

Hole Type	L_{ev}, in.	STD L_{eh}*, in. 1 1/2 ASD	1 1/2 LRFD	1 3/4 ASD	1 3/4 LRFD	OVS L_{eh}*, in. 1 1/2 ASD	1 1/2 LRFD	1 3/4 ASD	1 3/4 LRFD	SSLT L_{eh}*, in. 1 1/2 ASD	1 1/2 LRFD	1 3/4 ASD	1 3/4 LRFD
Coped at Top Flange Only	1 1/4	457	685	465	697	429	644	437	656	454	680	462	693
	1 3/8	459	689	467	701	431	647	440	659	456	684	464	696
	1 1/2	462	692	470	704	434	651	442	663	458	688	467	700
	1 5/8	464	696	472	708	436	654	444	667	461	691	469	704
	2	471	707	479	719	444	665	452	678	468	702	476	714
	3	491	736	499	748	463	695	471	707	488	732	496	744
Coped at Both Flanges	1 1/4	446	669	446	669	419	629	419	629	446	669	446	669
	1 3/8	451	676	451	676	424	636	424	636	451	676	451	676
	1 1/2	456	684	456	684	429	644	429	644	456	684	456	684
	1 5/8	461	691	461	691	434	651	434	651	461	691	461	691
	2	471	707	475	713	444	665	449	673	468	702	475	713
	3	491	736	499	748	463	695	471	707	488	732	496	744
Uncoped		644	965	644	965	644	965	644	965	644	965	644	965

Support Available Strength per Inch Thickness, kips/in.

Hole Type	ASD	LRFD
STD/ OVS/ SSLT	1290	1930

Notes:
STD = Standard holes
OVS = Oversized holes
SSLT = Short-slotted holes transverse to direction of load
N = Threads included
X = Threads excluded
SC = Slip critical

* Tabulated values include 1/4-in. reduction in end distance, L_{eh}, to account for possible underrun in beam length.

Note: Slip-critical bolt values assume no more than one filler has been provided or bolts have been added to distribute loads in the fillers.

Beam F_y = 50 ksi, F_u = 65 ksi
Angle F_y = 36 ksi, F_u = 58 ksi

Table 10-1 (continued)
All-Bolted Double-Angle Connections

3/4-in. Bolts

Bolt and Angle Available Strength, kips

10 Rows W44, 40, 36	Bolt Group	Thread Cond.	Hole Type	Angle Thickness, in. 1/4 ASD	1/4 LRFD	5/16 ASD	5/16 LRFD	3/8 ASD	3/8 LRFD	1/2 ASD	1/2 LRFD
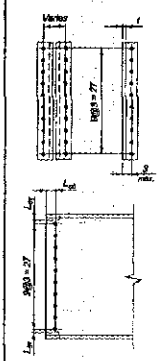	Group A	N	STD	164	246	205	308	239	358	239	358
		X	STD	164	246	205	308	246	370	301	451
		SC Class A	STD	127	190	127	190	127	190	127	190
			OVS	108	161	108	161	108	161	108	161
			SSLT	127	190	127	190	127	190	127	190
		SC Class B	STD	164	246	205	308	211	316	211	316
			OVS	163	245	180	269	180	269	180	269
			SSLT	163	244	204	306	211	316	211	316
	Group B	N	STD	164	246	205	308	246	370	301	451
		X	STD	164	246	205	308	246	370	329	493
		SC Class A	STD	158	237	158	237	158	237	158	237
			OVS	135	202	135	202	135	202	135	202
			SSLT	158	237	158	237	158	237	158	237
		SC Class B	STD	164	246	205	308	246	370	264	396
			OVS	163	245	204	306	225	336	225	336
			SSLT	163	244	204	306	244	367	264	396

Beam Web Available Strength per Inch Thickness, kips/in.

Hole Type	L_{ev}, in.	STD L_{eh}*, in. 1 1/2 ASD	1 1/2 LRFD	1 3/4 ASD	1 3/4 LRFD	OVS 1 1/2 ASD	1 1/2 LRFD	1 3/4 ASD	1 3/4 LRFD	SSLT 1 1/2 ASD	1 1/2 LRFD	1 3/4 ASD	1 3/4 LRFD
Coped at Top Flange Only	1 1/4	415	623	423	635	390	585	398	597	412	618	420	630
	1 3/8	418	626	426	639	392	589	401	601	415	622	423	634
	1 1/2	420	630	428	642	395	592	403	605	417	626	425	638
	1 5/8	423	634	431	646	397	596	405	608	419	629	428	641
	2	430	645	438	657	405	607	413	619	427	640	435	652
	3	449	674	457	686	424	636	432	648	446	669	454	682
Coped at Both Flanges	1 1/4	405	607	405	607	380	570	380	570	405	607	405	607
	1 3/8	410	614	410	614	385	578	385	578	410	614	410	614
	1 1/2	414	622	414	622	390	585	390	585	414	622	414	622
	1 5/8	419	629	419	629	395	592	395	592	419	629	419	629
	2	430	645	434	651	405	607	410	614	427	640	434	651
	3	449	674	457	686	424	636	432	648	446	669	454	682
Uncoped		585	878	585	878	585	878	585	878	585	878	585	878

Support Available Strength per Inch Thickness, kips/in.

Hole Type	ASD	LRFD
STD/ OVS/ SSLT	1170	1760

Notes:
STD = Standard holes
OVS = Oversized holes
SSLT = Short-slotted holes transverse to direction of load
N = Threads included
X = Threads excluded
SC = Slip critical

* Tabulated values include 1/4-in. reduction in end distance, L_{eh}, to account for possible underrun in beam length.

Note: Slip-critical bolt values assume no more than one filler has been provided or bolts have been added to distribute loads in the fillers.

Beam F_y = 50 ksi, F_u = 65 ksi
Angle F_y = 36 ksi, F_u = 58 ksi

Table 10-1 (continued)
All-Bolted Double-Angle Connections

3/4-in. Bolts

Bolt and Angle Available Strength, kips

9 Rows W44, 40, 36, 33	Bolt Group	Thread Cond.	Hole Type	Angle Thickness, in. 1/4 ASD	1/4 LRFD	5/16 ASD	5/16 LRFD	3/8 ASD	3/8 LRFD	1/2 ASD	1/2 LRFD
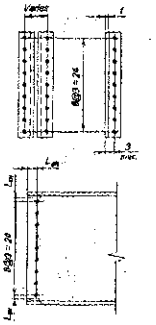	Group A	N	STD	148	222	185	278	215	322	215	322
		X	STD	148	222	185	278	222	333	271	406
		SC Class A	STD	114	171	114	171	114	171	114	171
			OVS	97.1	145	97.1	145	97.1	145	97.1	145
			SSLT	114	171	114	171	114	171	114	171
		SC Class B	STD	148	222	185	278	190	285	190	285
			OVS	147	221	162	242	162	242	162	242
			SSLT	147	220	183	275	190	285	190	285
	Group B	N	STD	148	222	185	278	222	333	271	406
		X	STD	148	222	185	278	222	333	296	444
		SC Class A	STD	142	214	142	214	142	214	142	214
			OVS	121	182	121	182	121	182	121	182
			SSLT	142	214	142	214	142	214	142	214
		SC Class B	STD	148	222	185	278	222	333	237	356
			OVS	147	221	184	276	202	303	202	303
			SSLT	147	220	183	275	220	330	237	356

Beam Web Available Strength per Inch Thickness, kips/in.

Hole Type	L_{ev}, in.	STD L_{eh}*, in. 1 1/2 ASD	1 1/2 LRFD	1 3/4 ASD	1 3/4 LRFD	OVS 1 1/2 ASD	1 1/2 LRFD	1 3/4 ASD	1 3/4 LRFD	SSLT 1 1/2 ASD	1 1/2 LRFD	1 3/4 ASD	1 3/4 LRFD
Coped at Top Flange Only	1 1/4	374	561	382	573	351	527	359	539	371	556	379	568
	1 3/8	376	564	384	576	353	530	362	542	373	560	381	572
	1 1/2	379	568	387	580	356	534	364	546	376	563	384	576
	1 5/8	381	572	389	584	358	537	366	550	378	567	386	579
	2	388	583	397	595	366	548	374	561	385	578	393	590
	3	408	612	416	624	385	578	393	590	405	607	413	619
Coped at Both Flanges	1 1/4	363	545	363	545	341	512	341	512	363	545	363	545
	1 3/8	368	552	368	552	346	519	346	519	368	552	368	552
	1 1/2	373	559	373	559	351	527	351	527	373	559	373	559
	1 5/8	378	567	378	567	356	534	356	534	378	567	378	567
	2	388	583	392	589	366	548	371	556	385	578	392	589
	3	408	612	416	624	385	578	393	590	405	607	413	619
Uncoped		527	790	527	790	527	790	527	790	527	790	527	790

Support Available Strength per Inch Thickness, kips/in.

Hole Type	ASD	LRFD
STD/ OVS/ SSLT	1050	1580

Notes:
STD = Standard holes
OVS = Oversized holes
SSLT = Short-slotted holes transverse to direction of load
N = Threads included
X = Threads excluded
SC = Slip critical

* Tabulated values include 1/4-in. reduction in end distance, L_{eh}, to account for possible underrun in beam length.

Note: Slip-critical bolt values assume no more than one filler has been provided or bolts have been added to distribute loads in the fillers.

Beam F_y = 50 ksi, F_u = 65 ksi
Angle F_y = 36 ksi, F_u = 58 ksi

Table 10-1 (continued)
All-Bolted Double-Angle Connections

3/4-in. Bolts

Bolt and Angle Available Strength, kips

8 Rows W44, 40, 36, 33, 30	Bolt Group	Thread Cond.	Hole Type	Angle Thickness, in. 1/4 ASD	1/4 LRFD	5/16 ASD	5/16 LRFD	3/8 ASD	3/8 LRFD	1/2 ASD	1/2 LRFD
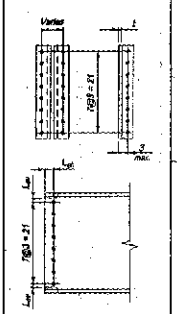	Group A	N	STD	132	198	165	247	191	286	191	286
		X	STD	132	198	165	247	198	297	240	361
		SC Class A	STD	101	152	101	152	101	152	101	152
			OVS	86.3	129	86.3	129	86.3	129	86.3	129
			SSLT	101	152	101	152	101	152	101	152
		SC Class B	STD	132	198	165	247	169	253	169	253
			OVS	131	197	144	215	144	215	144	215
			SSLT	131	196	163	245	169	253	169	253
	Group B	N	STD	132	198	165	247	198	297	240	361
		X	STD	132	198	165	247	198	297	264	396
		SC Class A	STD	127	190	127	190	127	190	127	190
			OVS	108	161	108	161	108	161	108	161
			SSLT	127	190	127	190	127	190	127	190
		SC Class B	STD	132	198	165	247	198	297	211	316
			OVS	131	197	164	246	180	269	180	269
			SSLT	131	196	163	245	196	294	211	316

Beam Web Available Strength per Inch Thickness, kips/in.

Hole Type	L_{ev}, in.	STD L_{eh}*, in. 1 1/2 ASD	1 1/2 LRFD	1 3/4 ASD	1 3/4 LRFD	OVS L_{eh}*, in. 1 1/2 ASD	1 1/2 LRFD	1 3/4 ASD	1 3/4 LRFD	SSLT L_{eh}*, in. 1 1/2 ASD	1 1/2 LRFD	1 3/4 ASD	1 3/4 LRFD
Coped at Top Flange Only	1 1/4	332	498	340	511	312	468	320	480	329	494	337	506
	1 3/8	335	502	343	514	314	472	323	484	332	498	340	510
	1 1/2	337	506	345	518	317	475	326	488	334	501	342	513
	1 5/8	340	509	348	522	319	479	327	491	337	505	345	517
	2	347	520	355	533	327	490	335	502	344	516	352	528
	3	366	550	375	562	346	519	354	531	363	545	372	557
Coped at Both Flanges	1 1/4	322	483	322	483	302	453	302	453	322	483	322	483
	1 3/8	327	490	327	490	307	461	307	461	327	490	327	490
	1 1/2	332	497	332	497	312	468	312	468	332	497	332	497
	1 5/8	336	505	336	505	317	475	317	475	336	505	336	505
	2	347	520	351	527	327	490	332	497	344	516	351	527
	3	366	550	375	562	346	519	354	531	363	545	372	557
Uncoped		468	702	468	702	468	702	468	702	468	702	468	702

Support Available Strength per Inch Thickness, kips/in.

Hole Type	ASD	LRFD
STD/ OVS/ SSLT	936	1400

Notes:
STD = Standard holes
OVS = Oversized holes
SSLT = Short-slotted holes transverse to direction of load
N = Threads included
X = Threads excluded
SC = Slip critical

* Tabulated values include 1/4-in. reduction in end distance, L_{eh}, to account for possible underrun in beam length.

Note: Slip-critical bolt values assume no more than one filler has been provided or bolts have been added to distribute loads in the fillers.

Beam $F_y = 50$ ksi, $F_u = 65$ ksi
Angle $F_y = 36$ ksi, $F_u = 58$ ksi

Table 10-1 (continued)
All-Bolted Double-Angle Connections

3/4-in. Bolts

Bolt and Angle Available Strength, kips

7 Rows W44, 40, 36, 33, 30, 27, 24	Bolt Group	Thread Cond.	Hole Type	Angle Thickness, in. 1/4 ASD	1/4 LRFD	5/16 ASD	5/16 LRFD	3/8 ASD	3/8 LRFD	1/2 ASD	1/2 LRFD
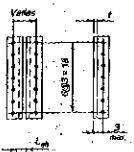	Group A	N	STD	116	174	145	217	167	251	167	251
		X	STD	116	174	145	217	174	260	210	316
		SC Class A	STD	88.6	133	88.6	133	88.6	133	88.6	133
			OVS	75.5	113	75.5	113	75.5	113	75.5	113
			SSLT	88.6	133	88.6	133	88.6	133	88.6	133
		SC Class B	STD	116	174	145	217	148	221	148	221
			OVS	115	172	126	188	126	188	126	188
			SSLT	114	172	143	214	148	221	148	221
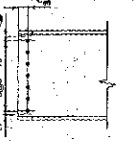	Group B	N	STD	116	174	145	217	174	260	210	316
		X	STD	116	174	145	217	174	260	231	347
		SC Class A	STD	111	166	111	166	111	166	111	166
			OVS	94.4	141	94.4	141	94.4	141	94.4	141
			SSLT	111	166	111	166	111	166	111	166
		SC Class B	STD	116	174	145	217	174	260	185	277
			OVS	115	172	144	215	157	235	157	235
			SSLT	114	172	143	214	172	257	185	277

Beam Web Available Strength per Inch Thickness, kips/in.

Hole Type	L_{ev}, in.	STD L_{eh}*, in. 1 1/2 ASD	1 1/2 LRFD	1 3/4 ASD	1 3/4 LRFD	OVS L_{eh}*, in. 1 1/2 ASD	1 1/2 LRFD	1 3/4 ASD	1 3/4 LRFD	SSLT L_{eh}*, in. 1 1/2 ASD	1 1/2 LRFD	1 3/4 ASD	1 3/4 LRFD
Coped at Top Flange Only	1 1/4	291	436	299	449	273	410	281	422	288	432	296	444
	1 3/8	293	440	301	452	275	413	284	425	290	435	298	448
	1 1/2	296	444	304	456	278	417	286	429	293	439	301	451
	1 5/8	298	447	306	459	280	420	288	433	295	443	303	455
	2	306	458	314	470	288	431	296	444	302	454	311	466
	3	325	488	333	500	307	461	315	473	322	483	330	495
Coped at Both Flanges	1 1/4	280	420	280	420	263	395	263	395	280	420	280	420
	1 3/8	285	428	285	428	268	402	268	402	285	428	285	428
	1 1/2	290	435	290	435	273	410	273	410	290	435	290	435
	1 5/8	295	442	295	442	278	417	278	417	295	442	295	442
	2	306	458	310	464	288	431	293	439	302	454	310	464
	3	325	488	333	500	307	461	315	473	322	483	330	495
Uncoped		410	614	410	614	410	614	410	614	410	614	410	614

Support Available Strength per Inch Thickness, kips/in.

Hole Type	ASD	LRFD
STD/ OVS/ SSLT	819	1230

Notes:
STD = Standard holes
OVS = Oversized holes
SSLT = Short-slotted holes transverse to direction of load
N = Threads included
X = Threads excluded
SC = Slip critical

* Tabulated values include 1/4-in. reduction in end distance, L_{eh}, to account for possible underrun in beam length.

Note: Slip-critical bolt values assume no more than one filler has been provided or bolts have been added to distribute loads in the fillers.

Beam F_y = 50 ksi, F_u = 65 ksi
Angle F_y = 36 ksi, F_u = 58 ksi

Table 10-1 (continued)
All-Bolted Double-Angle Connections

$^3/_4$-in. Bolts

Bolt and Angle Available Strength, kips

6 Rows W40, 36, 33, 30, 27, 24, 21	Bolt Group	Thread Cond.	Hole Type	Angle Thickness, in. $^1/_4$ ASD	$^1/_4$ LRFD	$^5/_{16}$ ASD	$^5/_{16}$ LRFD	$^3/_8$ ASD	$^3/_8$ LRFD	$^1/_2$ ASD	$^1/_2$ LRFD
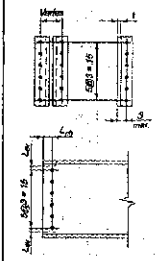	Group A	N	STD	99.5	149	124	187	143	215	143	215
		X	STD	99.5	149	124	187	149	224	180	271
		SC Class A	STD	75.9	114	75.9	114	75.9	114	75.9	114
			OVS	64.7	96.8	64.7	96.8	64.7	96.8	64.7	96.8
			SSLT	75.9	114	75.9	114	75.9	114	75.9	114
		SC Class B	STD	99.5	149	124	187	127	190	127	190
			OVS	98.6	148	108	161	108	161	108	161
			SSLT	98.2	147	123	184	127	190	127	190
	Group B	N	STD	99.5	149	124	187	149	224	180	271
		X	STD	99.5	149	124	187	149	224	199	299
		SC Class A	STD	94.9	142	94.9	142	94.9	142	94.9	142
			OVS	80.9	121	80.9	121	80.9	121	80.9	121
			SSLT	94.9	142	94.9	142	94.9	142	94.9	142
		SC Class B	STD	99.5	149	124	187	149	224	158	237
			OVS	98.6	148	123	185	135	202	135	202
			SSLT	98.2	147	123	184	147	221	158	237

Beam Web Available Strength per Inch Thickness, kips/in.

Hole Type	L_{ev}, in.	STD L_{eh}*, in. $1^1/_2$ ASD	STD $1^1/_2$ LRFD	STD $1^3/_4$ ASD	STD $1^3/_4$ LRFD	OVS $1^1/_2$ ASD	OVS $1^1/_2$ LRFD	OVS $1^3/_4$ ASD	OVS $1^3/_4$ LRFD	SSLT $1^1/_2$ ASD	SSLT $1^1/_2$ LRFD	SSLT $1^3/_4$ ASD	SSLT $1^3/_4$ LRFD
Coped at Top Flange Only	$1^1/_4$	249	374	258	386	234	351	242	363	246	370	255	382
	$1^3/_8$	252	378	260	390	236	355	245	367	249	373	257	385
	$1^1/_2$	254	381	262	394	239	358	247	371	251	377	259	389
	$1^5/_8$	257	385	265	397	241	362	249	374	254	381	262	393
	2	264	396	272	408	249	373	257	385	261	392	269	404
	3	284	425	292	438	268	402	276	414	281	421	289	433
Coped at Both Flanges	$1^1/_4$	239	358	239	358	224	336	224	336	239	358	239	358
	$1^3/_8$	244	366	244	366	229	344	229	344	244	366	244	366
	$1^1/_2$	249	373	249	373	234	351	234	351	249	373	249	373
	$1^5/_8$	254	380	254	380	239	358	239	358	254	380	254	380
	2	264	396	268	402	249	373	254	380	261	392	268	402
	3	284	425	292	438	268	402	276	414	281	421	289	433
Uncoped		351	527	351	527	351	527	351	527	351	527	351	527

Support Available Strength per Inch Thickness, kips/in.

Hole Type	ASD	LRFD
STD/ OVS/ SSLT	702	1050

Notes:
STD = Standard holes
OVS = Oversized holes
SSLT = Short-slotted holes transverse to direction of load
N = Threads included
X = Threads excluded
SC = Slip critical

* Tabulated values include $^1/_4$-in. reduction in end distance, L_{eh}, to account for possible underrun in beam length.

Note: Slip-critical bolt values assume no more than one filler has been provided or bolts have been added to distribute loads in the fillers.

Beam F_y = 50 ksi, F_u = 65 ksi
Angle F_y = 36 ksi, F_u = 58 ksi

Table 10-1 (continued)
All-Bolted Double-Angle Connections

3/4-in. Bolts

Bolt and Angle Available Strength, kips

5 Rows W30, 27, 24, 21, 18	Bolt Group	Thread Cond.	Hole Type	Angle Thickness, in. 1/4 ASD	1/4 LRFD	5/16 ASD	5/16 LRFD	3/8 ASD	3/8 LRFD	1/2 ASD	1/2 LRFD
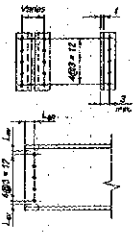	Group A	N	STD	83.3	125	104	156	119	179	119	179
		X	STD	83.3	125	104	156	125	187	150	225
		SC Class A	STD	63.3	94.9	63.3	94.9	63.3	94.9	63.3	94.9
			OVS	53.9	80.7	53.9	80.7	53.9	80.7	53.9	80.7
			SSLT	63.3	94.9	63.3	94.9	63.3	94.9	63.3	94.9
		SC Class B	STD	83.3	125	104	156	105	158	105	158
			OVS	82.4	124	89.9	134	89.9	134	89.9	134
			SSLT	82.0	123	102	154	105	158	105	158
	Group B	N	STD	83.3	125	104	156	125	187	150	225
		X	STD	83.3	125	104	156	125	187	167	250
		SC Class A	STD	79.1	119	79.1	119	79.1	119	79.1	119
			OVS	67.4	101	67.4	101	67.4	101	67.4	101
			SSLT	79.1	119	79.1	119	79.1	119	79.1	119
		SC Class B	STD	83.3	125	104	156	126	187	132	198
			OVS	82.4	124	103	155	112	168	112	168
			SSLT	82.0	123	102	154	123	184	132	198

Beam Web Available Strength per Inch Thickness, kips/in.

Hole Type	L_{ev}, in.	STD L_{eh}*, in. 1 1/2 ASD	1 1/2 LRFD	1 3/4 ASD	1 3/4 LRFD	OVS L_{eh}*, in. 1 1/2 ASD	1 1/2 LRFD	1 3/4 ASD	1 3/4 LRFD	SSLT L_{eh}*, in. 1 1/2 ASD	1 1/2 LRFD	1 3/4 ASD	1 3/4 LRFD
Coped at Top Flange Only	1 1/4	208	312	216	324	195	293	203	305	205	307	213	320
	1 3/8	210	316	219	328	197	296	206	308	207	311	216	323
	1 1/2	213	319	221	332	200	300	208	312	210	315	218	327
	1 5/8	215	323	223	335	202	303	210	316	212	318	220	331
	2	223	334	231	346	210	314	218	327	220	329	228	342
	3	242	363	250	375	229	344	237	356	239	359	247	371
Coped at Both Flanges	1 1/4	197	296	197	296	185	278	185	278	197	296	197	296
	1 3/8	202	303	202	303	190	285	190	285	202	303	202	303
	1 1/2	207	311	207	311	195	293	195	293	207	311	207	311
	1 5/8	212	318	212	318	200	300	200	300	212	318	212	318
	2	223	334	227	340	210	314	215	322	220	329	227	340
	3	242	363	250	375	229	344	237	356	239	359	247	371
Uncoped		293	439	293	439	293	439	293	439	293	439	293	439

Support Available Strength per Inch Thickness, kips/in.

Hole Type	ASD	LRFD
STD/ OVS/ SSLT	585	878

Notes:
STD = Standard holes
OVS = Oversized holes
SSLT = Short-slotted holes transverse to direction of load
N = Threads included
X = Threads excluded
SC = Slip critical

* Tabulated values include 1/4-in. reduction in end distance, L_{eh}, to account for possible underrun in beam length.

Note: Slip-critical bolt values assume no more than one filler has been provided or bolts have been added to distribute loads in the fillers.

Beam F_y = 50 ksi, F_u = 65 ksi
Angle F_y = 36 ksi, F_u = 58 ksi

Table 10-1 (continued)
All-Bolted Double-Angle Connections

3/4-in. Bolts

Bolt and Angle Available Strength, kips

4 Rows W24,.21, 18, 16	Bolt Group	Thread Cond.	Hole Type	Angle Thickness, in. 1/4 ASD	1/4 LRFD	5/16 ASD	5/16 LRFD	3/8 ASD	3/8 LRFD	1/2 ASD	1/2 LRFD
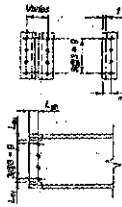	Group A	N	STD	67.1	101	83.9	126	95.5	143	95.5	143
		X	STD	67.1	101	83.9	126	101	151	120	180
		SC Class A	STD	50.6	75.9	50.6	75.9	50.6	75.9	50.6	75.9
			OVS	43.1	64.5	43.1	64.5	43.1	64.5	43.1	64.5
			SSLT	50.6	75.9	50.6	75.9	50.6	75.9	50.6	75.9
		SC Class B	STD	67.1	101	83.9	126	84.4	127	84.4	127
			OVS	65.3	97.9	71.9	108	71.9	108	71.9	108
			SSLT	65.8	98.7	82.2	123	84.4	127	84.4	127
	Group B	N	STD	67.1	101	83.9	126	101	151	120	180
		X	STD	67.1	101	83.9	126	101	151	134	201
		SC Class A	STD	63.3	94.9	63.3	94.9	63.3	94.9	63.3	94.9
			OVS	53.9	80.7	53.9	80.7	53.9	80.7	53.9	80.7
			SSLT	63.3	94.9	63.3	94.9	63.3	94.9	63.3	94.9
		SC Class B	STD	67.1	101	83.9	126	101	151	105	158
			OVS	65.3	97.9	81.6	122	89.9	134	89.9	134
			SSLT	65.8	98.7	82.2	123	98.7	148	105	158

Beam Web Available Strength per Inch Thickness, kips/in.

Hole Type		STD				OVS				SSLT			
		L_{eh}*, in.											
L_{ev}, in.		1 1/2		1 3/4		1 1/2		1 3/4		1 1/2		1 3/4	
		ASD	LRFD	ASD	LRFD	ASD	LRFD	ASD	LRFD	ASD	LRFD	ASD	LRFD
Coped at Top Flange Only	1 1/4	167	250	175	262	156	234	164	246	164	245	172	257
	1 3/8	169	254	177	266	158	238	167	250	166	249	174	261
	1 1/2	171	257	180	269	161	241	169	254	168	253	177	265
	1 5/8	174	261	182	273	163	245	171	257	171	256	179	268
	2	181	272	189	284	171	256	179	268	178	267	186	279
	3	201	301	209	313	190	285	198	297	198	296	206	309
Coped at Both Flanges	1 1/4	156	234	156	234	146	219	146	219	156	234	156	234
	1 3/8	161	241	161	241	151	227	151	227	161	241	161	241
	1 1/2	166	249	166	249	156	234	156	234	166	249	166	249
	1 5/8	171	256	171	256	161	241	161	241	171	256	171	256
	2	181	272	185	278	171	256	176	263	178	267	185	278
	3	201	301	209	313	190	285	198	297	198	296	206	309
Uncoped		234	351	234	351	234	351	234	351	234	351	234	351

Support Available Strength per Inch Thickness, kips/in.

Hole Type	ASD	LRFD
STD/ OVS/ SSLT	468	702

Notes:
STD = Standard holes
OVS = Oversized holes
SSLT = Short-slotted holes transverse to direction of load
N = Threads included
X = Threads excluded
SC = Slip critical

* Tabulated values include 1/4-in. reduction in end distance, L_{eh}, to account for possible underrun in beam length.

Note: Slip-critical bolt values assume no more than one filler has been provided or bolts have been added to distribute loads in the fillers.

Beam F_y = 50 ksi, F_u = 65 ksi
Angle F_y = 36 ksi, F_u = 58 ksi

Table 10-1 (continued)
All-Bolted Double-Angle Connections

3/4-in. Bolts

Bolt and Angle Available Strength, kips

3 Rows
W18, 16, 14, 12, 10* *Ltd. to W10x12, 15, 17, 19, 22, 26, 30

Bolt Group	Thread Cond.	Hole Type	Angle Thickness, in. 1/4 ASD	1/4 LRFD	5/16 ASD	5/16 LRFD	3/8 ASD	3/8 LRFD	1/2 ASD	1/2 LRFD
Group A	N	STD	50.9	76.4	63.7	95.5	71.6	107	71.6	107
	X	STD	50.9	76.4	63.7	95.5	76.4	115	90.2	135
	SC Class A	STD	38.0	57.0	38.0	57.0	38.0	57.0	38.0	57.0
		OVS	32.4	48.4	32.4	48.4	32.4	48.4	32.4	48.4
		SSLT	38.0	57.0	38.0	57.0	38.0	57.0	38.0	57.0
	SC Class B	STD	50.9	76.4	63.3	94.9	63.3	94.9	63.3	94.9
		OVS	47.9	71.8	53.9	80.7	53.9	80.7	53.9	80.7
		SSLT	49.6	74.4	62.0	92.9	63.3	94.9	63.3	94.9
Group B	N	STD	50.9	76.4	63.7	95.5	76.4	115	90.2	135
	X	STD	50.9	76.4	63.7	95.5	76.4	115	102	153
	SC Class A	STD	47.5	71.2	47.5	71.2	47.5	71.2	47.5	71.2
		OVS	40.4	60.5	40.4	60.5	40.4	60.5	40.4	60.5
		SSLT	47.5	71.2	47.5	71.2	47.5	71.2	47.5	71.2
	SC Class B	STD	50.9	76.4	63.7	95.5	76.4	115	79.1	119
		OVS	47.9	71.8	59.8	89.7	67.4	101	67.4	101
		SSLT	49.6	74.4	62.0	92.9	74.4	112	79.1	119

Beam Web Available Strength per Inch Thickness, kips/in.

Hole Type	L_{ev}, in.	STD L_{eh}*, in. 1 1/2 ASD	1 1/2 LRFD	1 3/4 ASD	1 3/4 LRFD	OVS L_{eh}*, in. 1 1/2 ASD	1 1/2 LRFD	1 3/4 ASD	1 3/4 LRFD	SSLT L_{eh}*, in. 1 1/2 ASD	1 1/2 LRFD	1 3/4 ASD	1 3/4 LRFD
Coped at Top Flange Only	1 1/4	125	188	133	200	117	176	125	188	122	183	130	195
	1 3/8	128	191	136	204	119	179	128	191	125	187	133	199
	1 1/2	130	195	138	207	122	183	130	195	127	190	135	203
	1 5/8	132	199	141	211	124	186	132	199	129	194	138	206
	2	140	210	148	222	132	197	140	210	137	205	145	217
	3	159	239	167	251	151	227	159	239	156	234	164	246
Coped at Both Flanges	1 1/4	115	172	115	172	107	161	107	161	115	172	115	172
	1 3/8	119	179	119	179	112	168	112	168	119	179	119	179
	1 1/2	124	186	124	186	117	176	117	176	124	186	124	186
	1 5/8	129	194	129	194	122	183	122	183	129	194	129	194
	2	140	210	144	216	132	197	137	205	137	205	144	216
	3	159	239	167	251	151	227	159	239	156	234	164	246
Uncoped		176	263	176	263	176	263	176	263	176	263	176	263

Support Available Strength per Inch Thickness, kips/in.

Hole Type	ASD	LRFD
STD/ OVS/ SSLT	351	526

Notes:
STD = Standard holes
OVS = Oversized holes
SSLT = Short-slotted holes transverse to direction of load
N = Threads included
X = Threads excluded
SC = Slip critical

* Tabulated values include 1/4-in. reduction in end distance, L_{eh}, to account for possible underrun in beam length.

Note: Slip-critical bolt values assume no more than one filler has been provided or bolts have been added to distribute loads in the fillers.

Beam F_y = 50 ksi, F_u = 65 ksi
Angle F_y = 36 ksi, F_u = 58 ksi

Table 10-1 (continued)
All-Bolted Double-Angle Connections

3/4-in. Bolts

Bolt and Angle Available Strength, kips

2 Rows W12, 10, 8	Bolt Group	Thread Cond.	Hole Type	Angle Thickness, in. 1/4 ASD	1/4 LRFD	5/16 ASD	5/16 LRFD	3/8 ASD	3/8 LRFD	1/2 ASD	1/2 LRFD
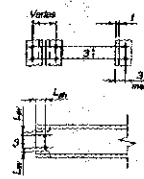	Group A	N	STD	32.6	48.9	40.8	61.2	47.7	71.6	47.7	71.6
		X	STD	32.6	48.9	40.8	61.2	48.9	73.4	60.1	90.2
		SC Class A	STD	25.3	38.0	25.3	38.0	25.3	38.0	25.3	38.0
			OVS	21.6	32.3	21.6	32.3	21.6	32.3	21.6	32.3
			SSLT	25.3	38.0	25.3	38.0	25.3	38.0	25.3	38.0
		SC Class B	STD	32.6	48.9	40.8	61.2	42.2	63.3	42.2	63.3
			OVS	30.5	45.7	36.0	53.8	36.0	53.8	36.0	53.8
			SSLT	32.6	48.9	40.8	61.2	42.2	63.3	42.2	63.3
	Group B	N	STD	32.6	48.9	40.8	61.2	48.9	73.4	60.1	90.2
		X	STD	32.6	48.9	40.8	61.2	48.9	73.4	68.3	97.9
		SC Class A	STD	31.6	47.5	31.6	47.5	31.6	47.5	31.6	47.5
			OVS	27.0	40.3	27.0	40.3	27.0	40.3	27.0	40.3
			SSLT	31.6	47.5	31.6	47.5	31.6	47.5	31.6	47.5
		SC Class B	STD	32.6	48.9	40.8	61.2	48.9	73.4	52.7	79.1
			OVS	30.5	45.7	38.1	57.1	44.9	67.2	44.9	67.2
			SSLT	32.6	48.9	40.8	61.2	48.9	73.4	52.7	79.1

Beam Web Available Strength per Inch Thickness, kips/in.

Hole Type	L_{ev}, in.	STD L_{eh}*, in. 1 1/2 ASD	1 1/2 LRFD	1 3/4 ASD	1 3/4 LRFD	OVS L_{eh}*, in. 1 1/2 ASD	1 1/2 LRFD	1 3/4 ASD	1 3/4 LRFD	SSLT L_{eh}*, in. 1 1/2 ASD	1 1/2 LRFD	1 3/4 ASD	1 3/4 LRFD
Coped at Top Flange Only	1 1/4	83.7	126	91.4	137	78.0	117	86.1	129	80.6	121	88.8	133
	1 3/8	86.1	129	94.3	141	80.4	121	88.6	133	83.1	125	91.2	137
	1 1/2	88.6	133	96.7	145	82.9	124	91.0	137	85.5	128	93.6	140
	1 5/8	91.0	137	99.1	149	85.3	128	93.4	140	88.0	132	96.1	144
	2	98.3	147	106	160	92.6	139	101	151	95.3	143	103	155
	3	116	175	117	176	112	168	117	176	113	170	117	176
Coped at Both Flanges	1 1/4	73.1	110	73.1	110	68.3	102	68.3	102	73.1	110	73.1	110
	1 3/8	78.0	117	78.0	117	73.1	110	73.1	110	78.0	117	78.0	117
	1 1/2	82.9	124	82.9	124	78.0	117	78.0	117	82.9	124	82.9	124
	1 5/8	87.8	132	87.8	132	82.9	124	82.9	124	87.8	132	87.8	132
	2	98.3	147	102	154	92.6	139	97.5	146	95.3	143	102	154
	3	116	175	117	176	112	168	117	176	113	170	117	176
Uncoped		117	176	117	176	117	176	117	176	117	176	117	176

Support Available Strength per Inch Thickness, kips/in.

Hole Type	ASD	LRFD
STD/ OVS/ SSLT	234	351

Notes:
STD = Standard holes
OVS = Oversized holes
SSLT = Short-slotted holes transverse to direction of load
N = Threads included
X = Threads excluded
SC = Slip critical

* Tabulated values include 1/4-in. reduction in end distance, L_{eh}, to account for possible underrun in beam length.

Note: Slip-critical bolt values assume no more than one filler has been provided or bolts have been added to distribute loads in the fillers.

Beam F_y = 50 ksi, F_u = 65 ksi
Angle F_y = 36 ksi, F_u = 58 ksi

Table 10-1 (continued)
All-Bolted Double-Angle Connections

7/8-in. Bolts

Bolt and Angle Available Strength, kips

12 Rows W44	Bolt Group	Thread Cond.	Hole Type	Angle Thickness, in. 1/4 ASD	1/4 LRFD	5/16 ASD	5/16 LRFD	3/8 ASD	3/8 LRFD	1/2 ASD	1/2 LRFD
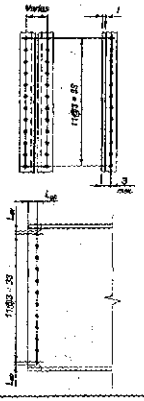	Group A	N	STD	196	294	245	367	294	441	389	584
		X	STD	196	294	245	367	294	441	392	587
		SC Class A	STD	196	294	212	317	212	317	212	317
			OVS	180	270	180	270	180	270	180	270
			SSLT	194	292	212	317	212	317	212	317
		SC Class B	STD	196	294	245	367	294	441	353	529
			OVS	191	287	239	359	287	431	300	450
			SSLT	194	292	243	365	292	438	353	529
	Group B	N	STD	196	294	245	367	294	441	392	587
		X	STD	196	294	245	367	294	441	392	587
		SC Class A	STD	196	294	245	367	266	399	266	399
			OVS	191	287	227	339	227	339	227	339
			SSLT	194	292	243	365	266	399	266	399
		SC Class B	STD	196	294	245	367	294	441	392	587
			OVS	191	287	239	359	287	431	378	565
			SSLT	194	292	243	365	292	438	389	583

Beam Web Available Strength per Inch Thickness, kips/in.

Hole Type	L_{ev}, in.	STD L_{eh}*, in. 1 1/2 ASD	1 1/2 LRFD	1 3/4 ASD	1 3/4 LRFD	OVS L_{eh}*, in. 1 1/2 ASD	1 1/2 LRFD	1 3/4 ASD	1 3/4 LRFD	SSLT L_{eh}*, in. 1 1/2 ASD	1 1/2 LRFD	1 3/4 ASD	1 3/4 LRFD
Coped at Top Flange Only	1 1/4	468	702	476	714	438	657	446	669	465	697	473	710
	1 3/8	470	706	479	718	440	661	449	673	467	701	476	713
	1 1/2	473	709	481	722	443	664	451	676	470	705	478	717
	1 5/8	475	713	483	725	445	668	453	680	472	708	480	721
	2	483	724	491	736	453	679	461	691	480	719	488	732
	3	502	753	510	765	472	708	480	720	499	749	507	761
Coped at Both Flanges	1 1/4	458	687	458	687	429	644	429	644	458	687	458	687
	1 3/8	463	695	463	695	434	651	434	651	463	695	463	695
	1 1/2	468	702	468	702	439	658	439	658	468	702	468	702
	1 5/8	473	709	473	709	444	665	444	665	472	708	473	709
	2	483	724	488	731	453	679	458	687	480	719	488	731
	3	502	753	510	765	472	708	480	720	499	749	507	761
Uncoped		819	1230	819	1230	819	1230	819	1230	819	1230	819	1230

Support Available Strength per Inch Thickness, kips/in.

Hole Type	ASD	LRFD
STD/ OVS/ SSLT	1640	2460

Notes:
STD = Standard holes
OVS = Oversized holes
SSLT = Short-slotted holes transverse to direction of load
N = Threads included
X = Threads excluded
SC = Slip critical

* Tabulated values include 1/4-in. reduction in end distance, L_{eh}, to account for possible underrun in beam length.

Note: Slip-critical bolt values assume no more than one filler has been provided or bolts have been added to distribute loads in the fillers.

Beam F_y = 50 ksi, F_u = 65 ksi
Angle F_y = 36 ksi, F_u = 58 ksi

Table 10-1 (continued)
All-Bolted Double-Angle Connections

7/8-in. Bolts

Bolt and Angle Available Strength, kips

11 Rows W44, 40	Bolt Group	Thread Cond.	Hole Type	Angle Thickness, in. 1/4 ASD	1/4 LRFD	5/16 ASD	5/16 LRFD	3/8 ASD	3/8 LRFD	1/2 ASD	1/2 LRFD
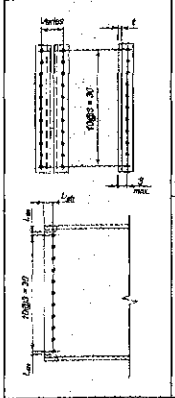	Group A	N	STD	180	269	225	337	269	404	357	535
		X	STD	180	269	225	337	269	404	359	539
		SC Class A	STD	180	269	194	291	194	291	194	291
			OVS	165	247	165	247	165	247	165	247
			SSLT	178	267	194	291	194	291	194	291
		SC Class B	STD	180	269	225	337	269	404	323	485
			OVS	175	263	219	328	263	394	275	412
			SSLT	178	267	223	334	267	401	323	485
	Group B	N	STD	180	269	225	337	269	404	359	539
		X	STD	180	269	225	337	269	404	359	539
		SC Class A	STD	180	269	225	337	244	365	244	365
			OVS	175	263	208	311	208	311	208	311
			SSLT	178	267	223	334	244	365	244	365
		SC Class B	STD	180	269	225	337	269	404	359	539
			OVS	175	263	219	328	263	394	346	518
			SSLT	178	267	223	334	267	401	357	535

Beam Web Available Strength per Inch Thickness, kips/in.

Hole Type	L_{ev}, in.	STD L_{eh}*, in. 1 1/2 ASD	1 1/2 LRFD	STD 1 3/4 ASD	1 3/4 LRFD	OVS 1 1/2 ASD	1 1/2 LRFD	OVS 1 3/4 ASD	1 3/4 LRFD	SSLT 1 1/2 ASD	1 1/2 LRFD	SSLT 1 3/4 ASD	1 3/4 LRFD
Coped at Top Flange Only	1 1/4	429	644	437	656	401	602	410	614	426	639	434	651
	1 3/8	431	647	440	659	404	606	412	618	428	643	437	655
	1 1/2	434	651	442	663	406	609	414	622	431	646	439	658
	1 5/8	436	654	444	667	409	613	417	625	433	650	441	662
	2	444	665	452	678	416	624	424	636	441	661	449	673
	3	463	695	471	707	436	653	444	665	460	690	468	702
Coped at Both Flanges	1 1/4	419	629	419	629	392	589	392	589	419	629	419	629
	1 3/8	424	636	424	636	397	596	397	596	424	636	424	636
	1 1/2	429	644	429	644	402	603	402	603	429	644	429	644
	1 5/8	434	651	434	651	407	611	407	611	433	650	434	651
	2	444	665	449	673	416	624	422	633	441	661	449	673
	3	463	695	471	707	436	653	444	665	460	690	468	702
Uncoped		751	1130	751	1130	751	1130	751	1130	751	1130	751	1130

Support Available Strength per Inch Thickness, kips/in.

Hole Type	ASD	LRFD
STD/ OVS/ SSLT	1500	2250

Notes:
STD = Standard holes
OVS = Oversized holes
SSLT = Short-slotted holes transverse to direction of load
N = Threads included
X = Threads excluded
SC = Slip critical

* Tabulated values include 1/4-in. reduction in end distance, L_{eh}, to account for possible underrun in beam length.

Note: *Slip-critical bolt values assume no more than one filler has been provided or bolts have been added to distribute loads in the fillers.*

Beam F_y = 50 ksi, F_u = 65 ksi
Angle F_y = 36 ksi, F_u = 58 ksi

Table 10-1 (continued)
All-Bolted Double-Angle Connections

7/8-in. Bolts

Bolt and Angle Available Strength, kips

10 Rows W44, 40, 36	Bolt Group	Thread Cond.	Hole Type	Angle Thickness, in. 1/4 ASD	1/4 LRFD	5/16 ASD	5/16 LRFD	3/8 ASD	3/8 LRFD	1/2 ASD	1/2 LRFD
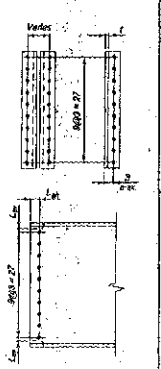	Group A	N	STD	163	245	204	306	245	368	325	487
		X	STD	163	245	204	306	245	368	327	490
		SC Class A	STD	163	245	176	264	176	264	176	264
			OVS	150	225	150	225	150	225	150	225
			SSLT	162	243	176	264	176	264	176	264
		SC Class B	STD	163	245	204	306	245	368	294	441
			OVS	159	238	198	298	238	357	250	375
			SSLT	162	243	203	304	243	365	294	441
	Group B	N	STD	163	245	204	306	245	368	327	490
		X	STD	163	245	204	306	245	368	327	490
		SC Class A	STD	163	245	204	306	221	332	221	332
			OVS	159	238	189	282	189	282	189	282
			SSLT	162	243	203	304	221	332	221	332
		SC Class B	STD	163	245	204	306	245	368	327	490
			OVS	159	238	198	298	238	357	315	471
			SSLT	162	243	203	304	243	365	324	486

Beam Web Available Strength per Inch Thickness, kips/in.

Hole Type	L_{ev}, in.	STD L_{eh}*, in. 1 1/2 ASD	1 1/2 LRFD	1 3/4 ASD	1 3/4 LRFD	OVS L_{eh}*, in. 1 1/2 ASD	1 1/2 LRFD	1 3/4 ASD	1 3/4 LRFD	SSLT L_{eh}*, in. 1 1/2 ASD	1 1/2 LRFD	1 3/4 ASD	1 3/4 LRFD
Coped at Top Flange Only	1 1/4	390	585	398	597	365	547	373	559	387	580	395	593
	1 3/8	392	589	401	601	367	551	375	563	389	584	398	596
	1 1/2	395	592	403	605	370	555	378	567	392	588	400	600
	1 5/8	397	596	405	608	372	558	380	570	394	591	402	604
	2	405	607	413	619	379	569	388	581	402	602	410	615
	3	424	636	432	648	399	598	407	611	421	632	429	644
Coped at Both Flanges	1 1/4	380	570	380	570	356	534	356	534	380	570	380	570
	1 3/8	385	578	385	578	361	541	361	541	385	578	385	578
	1 1/2	390	585	390	585	366	548	366	548	390	585	390	585
	1 5/8	395	592	395	592	371	556	371	556	394	591	395	592
	2	405	607	410	614	379	569	385	578	402	602	410	614
	3	424	636	432	648	399	598	407	611	421	632	429	644
Uncoped		683	1020	683	1020	683	1020	683	1020	683	1020	683	1020

Support Available Strength per Inch Thickness, kips/in.

Hole Type	ASD	LRFD
STD/ OVS/ SSLT	1370	2050

Notes:
STD = Standard holes
OVS = Oversized holes
SSLT = Short-slotted holes transverse to direction of load
N = Threads included
X = Threads excluded
SC = Slip critical

* Tabulated values include 1/4-in. reduction in end distance, L_{eh}, to account for possible underrun in beam length.

Note: Slip-critical bolt values assume no more than one filler has been provided or bolts have been added to distribute loads in the fillers.

Beam F_y = 50 ksi, F_u = 65 ksi
Angle F_y = 36 ksi, F_u = 58 ksi

Table 10-1 (continued)
All-Bolted Double-Angle Connections

7/8-in. Bolts

Bolt and Angle Available Strength, kips

9 Rows W44, 40, 36, 33	Bolt Group	Thread Cond.	Hole Type	Angle Thickness, in. 1/4 ASD	1/4 LRFD	5/16 ASD	5/16 LRFD	3/8 ASD	3/8 LRFD	1/2 ASD	1/2 LRFD
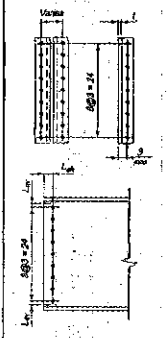	Group A	N	STD	147	221	184	276	221	331	292	438
		X	STD	147	221	184	276	221	331	294	442
		SC Class A	STD	147	221	159	238	159	238	159	238
			OVS	135	202	135	202	135	202	135	202
			SSLT	146	219	159	238	159	238	159	238
		SC Class B	STD	147	221	184	276	221	331	264	397
			OVS	142	214	178	267	214	321	225	337
			SSLT	146	219	182	273	219	328	264	397
	Group B	N	STD	147	221	184	276	221	331	294	442
		X	STD	147	221	184	276	221	331	294	442
		SC Class A	STD	147	221	184	276	199	299	199	299
			OVS	142	214	170	254	170	254	170	254
			SSLT	146	219	182	273	199	299	199	299
		SC Class B	STD	147	221	184	276	221	331	294	442
			OVS	142	214	178	267	214	321	283	424
			SSLT	146	219	182	273	219	328	292	438

Beam Web Available Strength per Inch Thickness, kips/in.

Hole Type	L_{ev}, in.	STD L_{eh}*, in. 1 1/2 ASD	1 1/2 LRFD	1 3/4 ASD	1 3/4 LRFD	OVS L_{eh}*, in. 1 1/2 ASD	1 1/2 LRFD	1 3/4 ASD	1 3/4 LRFD	SSLT L_{eh}*, in. 1 1/2 ASD	1 1/2 LRFD	1 3/4 ASD	1 3/4 LRFD
Coped at Top Flange Only	1 1/4	351	527	359	539	328	492	336	505	348	522	356	534
	1 3/8	353	530	362	542	331	496	339	508	350	526	359	538
	1 1/2	356	534	364	546	333	500	341	512	353	529	361	541
	1 5/8	358	537	366	550	336	503	344	516	355	533	363	545
	2	366	548	374	561	343	514	351	527	363	544	371	556
	3	385	578	393	590	362	544	371	556	382	573	390	585
Coped at Both Flanges	1 1/4	341	512	341	512	319	479	319	479	341	512	341	512
	1 3/8	346	519	346	519	324	486	324	486	346	519	346	519
	1 1/2	351	527	351	527	329	494	329	494	351	527	351	527
	1 5/8	356	534	356	534	334	501	334	501	355	533	356	534
	2	366	548	371	556	343	514	349	523	363	544	371	556
	3	385	578	393	590	362	544	371	556	382	573	390	585
Uncoped		614	921	614	921	614	921	614	921	614	921	614	921

Support Available Strength per Inch Thickness, kips/in.

Hole Type	ASD	LRFD
STD/ OVS/ SSLT	1230	1840

Notes:
STD = Standard holes
OVS = Oversized holes
SSLT = Short-slotted holes transverse to direction of load
N = Threads included
X = Threads excluded
SC = Slip critical

* Tabulated values include 1/4-in. reduction in end distance, L_{eh}, to account for possible underrun in beam length.

Note: Slip-critical bolt values assume no more than one filler has been provided or bolts have been added to distribute loads in the fillers.

Beam F_y = 50 ksi, F_u = 65 ksi
Angle F_y = 36 ksi, F_u = 58 ksi

Table 10-1 (continued)
All-Bolted Double-Angle Connections

7/8-in. Bolts

Bolt and Angle Available Strength, kips

8 Rows W44, 40, 36, 33, 30	Bolt Group	Thread Cond.	Hole Type	Angle Thickness, in. 1/4 ASD	1/4 LRFD	5/16 ASD	5/16 LRFD	3/8 ASD	3/8 LRFD	1/2 ASD	1/2 LRFD
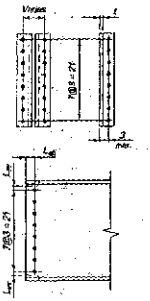	Group A	N	STD	131	197	164	246	197	295	260	389
		X	STD	131	197	164	246	197	295	262	393
		SC Class A	STD	131	197	141	212	141	212	141	212
			OVS	120	180	120	180	120	180	120	180
			SSLT	130	194	141	212	141	212	141	212
		SC Class B	STD	131	197	164	246	197	295	235	353
			OVS	126	189	158	237	189	284	200	300
			SSLT	130	194	162	243	194	292	235	353
	Group B	N	STD	131	197	164	246	197	295	262	393
		X	STD	131	197	164	246	197	295	262	393
		SC Class A	STD	131	197	164	246	177	266	177	266
			OVS	126	189	151	226	151	226	151	226
			SSLT	130	194	162	243	177	266	177	266
		SC Class B	STD	131	197	164	246	197	295	262	393
			OVS	126	189	158	237	189	284	252	377
			SSLT	130	194	162	243	194	292	259	389

Beam Web Available Strength per Inch Thickness, kips/in.

Hole Type	L_{ev}, in.	STD L_{eh}*, in. 1 1/2 ASD	1 1/2 LRFD	1 3/4 ASD	1 3/4 LRFD	OVS L_{eh}*, in. 1 1/2 ASD	1 1/2 LRFD	1 3/4 ASD	1 3/4 LRFD	SSLT L_{eh}*, in. 1 1/2 ASD	1 1/2 LRFD	1 3/4 ASD	1 3/4 LRFD
Coped at Top Flange Only	1 1/4	312	468	320	480	292	438	300	450	309	463	317	476
	1 3/8	314	472	323	484	294	441	302	453	311	467	320	479
	1 1/2	317	475	325	488	297	445	305	457	314	471	322	483
	1 5/8	319	479	327	491	299	449	307	461	316	474	324	487
	2	327	490	335	502	306	459	314	472	324	485	332	498
	3	346	519	354	531	326	489	334	501	343	515	351	527
Coped at Both Flanges	1 1/4	302	453	302	453	283	424	283	424	302	453	302	453
	1 3/8	307	461	307	461	288	431	288	431	307	461	307	461
	1 1/2	312	468	312	468	293	439	293	439	312	468	312	468
	1 5/8	317	475	317	475	297	446	297	446	316	474	317	475
	2	327	490	332	497	306	459	312	468	324	485	332	497
	3	346	519	354	531	326	489	334	501	343	515	351	527
Uncoped		546	819	546	819	546	819	546	819	546	819	546	819

Support Available Strength per Inch Thickness, kips/in.

Hole Type	ASD	LRFD
STD/ OVS/ SSLT	1090	1640

Notes:
STD = Standard holes
OVS = Oversized holes
SSLT = Short-slotted holes transverse to direction of load
N = Threads included
X = Threads excluded
SC = Slip critical

* Tabulated values include 1/4-in. reduction in end distance, L_{eh}, to account for possible underrun in beam length.

Note: Slip-critical bolt values assume no more than one filler has been provided or bolts have been added to distribute loads in the fillers.

Beam F_y = 50 ksi, F_u = 65 ksi
Angle F_y = 36 ksi, F_u = 58 ksi

Table 10-1 (continued)
All-Bolted Double-Angle Connections

7/8-in. Bolts

Bolt and Angle Available Strength, kips

7 Rows W44, 40, 36, 33, 30, 27, 24	Bolt Group	Thread Cond.	Hole Type	Angle Thickness, in. 1/4 ASD	1/4 LRFD	5/16 ASD	5/16 LRFD	3/8 ASD	3/8 LRFD	1/2 ASD	1/2 LRFD
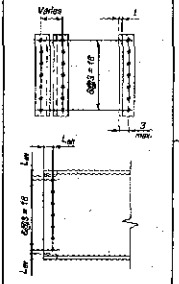	Group A	N	STD	115	172	144	215	172	258	227	341
		X	STD	115	172	144	215	172	258	230	344
		SC Class A	STD	115	172	123	185	123	185	123	185
			OVS	105	157	105	157	105	157	105	157
			SSLT	113	170	123	185	123	185	123	185
		SC Class B	STD	115	172	144	215	172	258	206	308
			OVS	110	165	137	206	165	247	175	262
			SSLT	113	170	142	213	170	255	206	308
	Group B	N	STD	115	172	144	215	172	258	230	344
		X	STD	115	172	144	215	172	258	230	344
		SC Class A	STD	115	172	144	215	155	233	155	233
			OVS	110	165	132	198	132	198	132	198
			SSLT	113	170	142	213	155	233	155	233
		SC Class B	STD	115	172	144	215	172	258	230	344
			OVS	110	165	137	206	165	247	220	329
			SSLT	113	170	142	213	170	255	227	340

Beam Web Available Strength per Inch Thickness, kips/in.

Hole Type	L_{ev}, in.	STD L_{eh}*, in. 1 1/2 ASD	1 1/2 LRFD	1 3/4 ASD	1 3/4 LRFD	OVS L_{eh}*, in. 1 1/2 ASD	1 1/2 LRFD	1 3/4 ASD	1 3/4 LRFD	SSLT L_{eh}*, in. 1 1/2 ASD	1 1/2 LRFD	1 3/4 ASD	1 3/4 LRFD
Coped at Top Flange Only	1 1/4	273	410	281	422	255	383	263	395	270	405	278	417
	1 3/8	275	413	284	425	258	386	266	399	272	409	281	421
	1 1/2	278	417	286	429	260	390	268	402	275	412	283	424
	1 5/8	280	420	288	433	262	394	271	406	277	416	285	428
	2	288	431	296	444	270	405	278	417	285	427	293	439
	3	307	461	315	473	289	434	297	446	304	456	312	468
Coped at Both Flanges	1 1/4	263	395	263	395	246	369	246	369	263	395	263	395
	1 3/8	268	402	268	402	251	377	251	377	268	402	268	402
	1 1/2	273	410	273	410	256	384	256	384	273	410	273	410
	1 5/8	278	417	278	417	261	391	261	391	277	416	278	417
	2	288	431	293	439	270	405	275	413	285	427	293	439
	3	307	461	315	473	289	434	297	446	304	456	312	468
Uncoped		478	717	478	717	478	717	478	717	478	717	478	717

Support Available Strength per Inch Thickness, kips/in.

Hole Type	ASD	LRFD
STD/ OVS/ SSLT	956	1430

Notes:
STD = Standard holes
OVS = Oversized holes
SSLT = Short-slotted holes transverse to direction of load
N = Threads included
X = Threads excluded
SC = Slip critical

* Tabulated values include 1/4-in. reduction in end distance, L_{eh}, to account for possible underrun in beam length.

Note: Slip-critical bolt values assume no more than one filler has been provided or bolts have been added to distribute loads in the fillers.

Beam F_y = 50 ksi, F_u = 65 ksi
Angle F_y = 36 ksi, F_u = 58 ksi

Table 10-1 (continued)
All-Bolted Double-Angle Connections

7/8-in. Bolts

6 Rows
W40, 36, 33, 30, 27, 24, 21

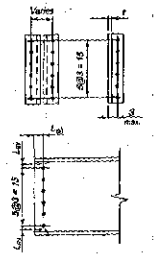

Bolt and Angle Available Strength, kips

Bolt Group	Thread Cond.	Hole Type	Angle Thickness, in. 1/4 ASD	1/4 LRFD	5/16 ASD	5/16 LRFD	3/8 ASD	3/8 LRFD	1/2 ASD	1/2 LRFD
Group A	N	STD	98.6	148	123	185	148	222	195	292
	X	STD	98.6	148	123	185	148	222	197	296
	SC Class A	STD	98.6	148	106	159	106	159	106	159
		OVS	90.1	135	90.1	135	90.1	135	90.1	135
		SSLT	97.3	146	106	159	106	159	106	159
	SC Class B	STD	98.6	148	123	185	148	222	176	264
		OVS	93.5	140	117	175	140	210	150	225
		SSLT	97.3	146	122	182	146	219	176	264
Group B	N	STD	98.6	148	123	185	148	222	197	296
	X	STD	98.6	148	123	185	148	222	197	296
	SC Class A	STD	98.6	148	123	185	133	199	133	199
		OVS	93.5	140	113	169	113	169	113	169
		SSLT	97.3	146	122	182	133	199	133	199
	SC Class B	STD	98.6	148	123	185	148	222	197	296
		OVS	93.5	140	117	175	140	210	187	281
		SSLT	97.3	146	122	182	146	219	195	292

Beam Web Available Strength per Inch Thickness, kips/in.

Hole Type	L_{ev}, in.	STD L_{eh}*, in. 1 1/2 ASD	1 1/2 LRFD	1 3/4 ASD	1 3/4 LRFD	OVS L_{eh}*, in. 1 1/2 ASD	1 1/2 LRFD	1 3/4 ASD	1 3/4 LRFD	SSLT L_{eh}*, in. 1 1/2 ASD	1 1/2 LRFD	1 3/4 ASD	1 3/4 LRFD
Coped at Top Flange Only	1 1/4	234	351	242	363	219	328	227	340	231	346	239	359
	1 3/8	236	355	245	367	221	332	229	344	233	350	242	362
	1 1/2	239	358	247	371	223	335	232	347	236	354	244	366
	1 5/8	241	362	249	374	226	339	234	351	238	357	246	370
	2	249	373	257	385	233	350	241	362	246	368	254	381
	3	268	402	276	414	253	379	261	391	265	398	273	410
Coped at Both Flanges	1 1/4	224	336	224	336	210	314	210	314	224	336	224	336
	1 3/8	229	344	229	344	215	322	215	322	229	344	229	344
	1 1/2	234	351	234	351	219	329	219	329	234	351	234	351
	1 5/8	239	358	239	358	224	336	224	336	238	357	239	358
	2	249	373	254	380	233	350	239	358	246	368	254	380
	3	268	402	276	414	263	379	261	391	265	398	273	410
Uncoped		410	614	410	614	410	614	410	614	410	614	410	614

Support Available Strength per Inch Thickness, kips/in.

Hole Type	ASD	LRFD
STD/ OVS/ SSLT	819	1230

Notes:
STD = Standard holes
OVS = Oversized holes
SSLT = Short-slotted holes transverse to direction of load
N = Threads included
X = Threads excluded
SC = Slip critical

* Tabulated values include 1/4-in. reduction in end distance, L_{eh}, to account for possible underrun in beam length.

Note: Slip-critical bolt values assume no more than one filler has been provided or bolts have been added to distribute loads in the fillers.

Beam F_y = 50 ksi, F_u = 65 ksi
Angle F_y = 36 ksi, F_u = 58 ksi

Table 10-1 (continued)
All-Bolted Double-Angle Connections

7/8-in. Bolts

Bolt and Angle Available Strength, kips

5 Rows W30, 27, 24, 21, 18	Bolt Group	Thread Cond.	Hole Type	Angle Thickness, in. 1/4 ASD	1/4 LRFD	5/16 ASD	5/16 LRFD	3/8 ASD	3/8 LRFD	1/2 ASD	1/2 LRFD
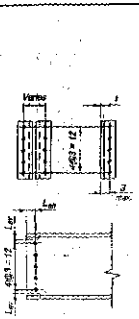	Group A	N	STD	82.4	124	103	155	124	185	162	243
		X	STD	82.4	124	103	155	124	185	165	247
		SC Class A	STD	82.4	124	88.1	132	88.1	132	88.1	132
			OVS	75.1	112	75.1	112	75.1	112	75.1	112
			SSLT	81.1	122	88.1	132	88.1	132	88.1	132
		SC Class B	STD	82.4	124	103	155	124	185	147	220
			OVS	77.2	116	96.5	145	116	174	125	187
			SSLT	81.1	122	101	152	122	182	147	220
	Group B	N	STD	82.4	124	103	155	124	185	165	247
		X	STD	82.4	124	103	155	124	185	165	247
		SC Class A	STD	82.4	124	103	155	111	166	111	166
			OVS	77.2	116	94.4	141	94.4	141	94.4	141
			SSLT	81.1	122	101	152	111	166	111	166
		SC Class B	STD	82.4	124	103	155	124	185	165	247
			OVS	77.2	116	96.5	145	116	174	154	232
			SSLT	81.1	122	101	152	122	182	162	243

Beam Web Available Strength per Inch Thickness, kips/in.

Hole Type	L_{ev} in.	STD L_{eh}*, in. 1 1/2 ASD	1 1/2 LRFD	1 3/4 ASD	1 3/4 LRFD	OVS L_{eh}*, in. 1 1/2 ASD	1 1/2 LRFD	1 3/4 ASD	1 3/4 LRFD	SSLT L_{eh}*, in. 1 1/2 ASD	1 1/2 LRFD	1 3/4 ASD	1 3/4 LRFD
Coped at Top Flange Only	1 1/4	195	293	203	305	182	273	190	285	192	288	200	300
	1 3/8	197	296	206	308	184	277	193	289	194	292	203	304
	1 1/2	200	300	208	312	187	280	195	293	197	295	205	307
	1 5/8	202	303	210	316	189	284	197	296	199	299	207	311
	2	210	314	218	327	197	295	205	307	207	310	215	322
	3	229	344	237	356	216	324	224	336	226	339	234	351
Coped at Both Flanges	1 1/4	185	278	185	278	173	260	173	260	185	278	185	278
	1 3/8	190	285	190	285	178	267	178	267	190	285	190	285
	1 1/2	195	293	195	293	183	274	183	274	195	293	195	293
	1 5/8	200	300	200	300	188	282	188	282	199	299	200	300
	2	210	314	215	322	197	295	202	303	207	310	215	322
	3	229	344	237	356	216	324	224	336	226	339	234	351
Uncoped		341	512	341	512	341	512	341	512	341	512	341	512

Support Available Strength per Inch Thickness, kips/in.

Hole Type	ASD	LRFD
STD/ OVS/ SSLT	683	1020

Notes:
STD = Standard holes
OVS = Oversized holes
SSLT = Short-slotted holes transverse to direction of load
N = Threads included
X = Threads excluded
SC = Slip critical

* Tabulated values include 1/4-in. reduction in end distance, L_{eh}, to account for possible underrun in beam length.

Note: Slip-critical bolt values assume no more than one filler has been provided or bolts have been added to distribute loads in the fillers.

Beam F_y = 50 ksi, F_u = 65 ksi
Angle F_y = 36 ksi, F_u = 58 ksi

Table 10-1 (continued)
All-Bolted Double-Angle Connections

7/8-in. Bolts

Bolt and Angle Available Strength, kips

4 Rows W24, 21, 18, 16	Bolt Group	Thread Cond.	Hole Type	Angle Thickness, in. 1/4 ASD	1/4 LRFD	5/16 ASD	5/16 LRFD	3/8 ASD	3/8 LRFD	1/2 ASD	1/2 LRFD
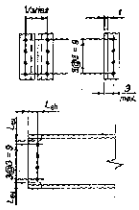	Group A	N	STD	65.3	97.9	81.6	122	97.9	147	130	195
		X	STD	65.3	97.9	81.6	122	97.9	147	131	196
		SC Class A	STD	65.3	97.9	70.5	106	70.5	106	70.5	106
			OVS	60.1	89.9	60.1	89.9	60.1	89.9	60.1	89.9
			SSLT	64.9	97.3	70.5	106	70.5	106	70.5	106
		SC Class B	STD	65.3	97.9	81.6	122	97.9	147	118	176
			OVS	60.9	91.4	76.1	114	91.4	137	100	150
			SSLT	64.9	97.3	81.1	122	97.3	146	118	176
	Group B	N	STD	65.3	97.9	81.6	122	97.9	147	131	196
		X	STD	65.3	97.9	81.6	122	97.9	147	131	196
		SC Class A	STD	65.3	97.9	81.6	122	88.6	133	88.6	133
			OVS	60.9	91.4	75.5	113	75.5	113	75.5	113
			SSLT	64.9	97.3	81.1	122	88.6	133	88.6	133
		SC Class B	STD	65.3	97.9	81.6	122	97.9	147	131	196
			OVS	60.9	91.4	76.1	114	91.4	137	122	183
			SSLT	64.9	97.3	81.1	122	97.3	146	130	195

Beam Web Available Strength per Inch Thickness, kips/in.

Hole Type	L_{ev}, in.	STD L_{eh}*, in. 1 1/2 ASD	1 1/2 LRFD	1 3/4 ASD	1 3/4 LRFD	OVS L_{eh}*, in. 1 1/2 ASD	1 1/2 LRFD	1 3/4 ASD	1 3/4 LRFD	SSLT L_{eh}*, in. 1 1/2 ASD	1 1/2 LRFD	1 3/4 ASD	1 3/4 LRFD
Coped at Top Flange Only	1 1/4	156	234	164	246	145	218	154	230	153	229	161	242
	1 3/8	158	238	167	250	148	222	156	234	155	233	164	245
	1 1/2	161	241	169	254	150	225	158	238	158	237	166	249
	1 5/8	163	245	171	257	153	229	161	241	160	240	168	253
	2	171	256	179	268	160	240	168	252	168	251	176	264
	3	190	285	198	297	180	269	188	282	187	281	195	293
Coped at Both Flanges	1 1/4	146	219	146	219	137	205	137	205	146	219	146	219
	1 3/8	151	227	151	227	141	212	141	212	151	227	151	227
	1 1/2	156	234	156	234	146	219	146	219	156	234	156	234
	1 5/8	161	241	161	241	151	227	151	227	160	240	161	241
	2	171	256	176	263	160	240	166	249	168	251	176	263
	3	190	285	198	297	180	269	188	282	187	281	195	293
Uncoped		273	410	273	410	273	410	273	410	273	410	273	410

Support Available Strength per Inch Thickness, kips/in.

Hole Type	ASD	LRFD
STD/ OVS/ SSLT	546	819

Notes:
STD = Standard holes
OVS = Oversized holes
SSLT = Short-slotted holes transverse to direction of load
N = Threads included
X = Threads excluded
SC = Slip critical

* Tabulated values include 1/4-in. reduction in end distance, L_{eh}, to account for possible underrun in beam length.

Note: Slip-critical bolt values assume no more than one filler has been provided or bolts have been added to distribute loads in the fillers.

Beam F_y = 50 ksi, F_u = 65 ksi
Angle F_y = 36 ksi, F_u = 58 ksi

Table 10-1 (continued)
All-Bolted Double-Angle Connections

7/8-in. Bolts

Bolt and Angle Available Strength, kips

3 Rows W18, 16, 14, 12, 10* *Ltd. to W10x12, 16, 17, 19, 22, 26, 30	Bolt Group	Thread Cond.	Hole Type	Angle Thickness, in. 1/4 ASD	1/4 LRFD	5/16 ASD	5/16 LRFD	3/8 ASD	3/8 LRFD	1/2 ASD	1/2 LRFD
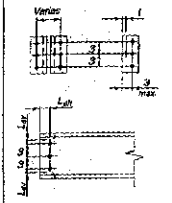	Group A	N	STD	47.9	71.8	59.8	89.7	71.8	108	95.7	144
		X	STD	47.9	71.8	59.8	89.7	71.8	108	95.7	144
		SC Class A	STD	47.9	71.8	52.9	79.3	52.9	79.3	52.9	79.3
			OVS	44.6	66.9	45.1	67.4	45.1	67.4	45.1	67.4
			SSLT	47.9	71.8	52.9	79.3	52.9	79.3	52.9	79.3
		SC Class B	STD	47.9	71.8	59.8	89.7	71.8	108	88.1	132
			OVS	44.6	66.9	55.7	83.6	66.9	100	75.1	112
			SSLT	47.9	71.8	59.8	89.7	71.8	108	88.1	132
	Group B	N	STD	47.9	71.8	59.8	89.7	71.8	108	95.7	144
		X	STD	47.9	71.8	59.8	89.7	71.8	108	95.7	144
		SC Class A	STD	47.9	71.8	59.8	89.7	66.4	99.7	66.4	99.7
			OVS	44.6	66.9	55.7	83.6	56.6	84.7	56.6	84.7
			SSLT	47.9	71.8	59.8	89.7	66.4	99.7	66.4	99.7
		SC Class B	STD	47.9	71.8	59.8	89.7	71.8	108	95.7	144
			OVS	44.6	66.9	55.7	83.6	66.9	100	89.2	134
			SSLT	47.9	71.8	59.8	89.7	71.8	108	95.7	144

Beam Web Available Strength per Inch Thickness, kips/in.

Hole Type	L_{ev}, in.	STD L_{eh}*, in. 1 1/2 ASD	1 1/2 LRFD	1 3/4 ASD	1 3/4 LRFD	OVS L_{eh}*, in. 1 1/2 ASD	1 1/2 LRFD	1 3/4 ASD	1 3/4 LRFD	SSLT L_{eh}*, in. 1 1/2 ASD	1 1/2 LRFD	1 3/4 ASD	1 3/4 LRFD
Coped at Top Flange Only	1 1/4	117	176	125	188	109	163	117	176	114	171	122	183
	1 3/8	119	179	128	191	111	167	119	179	116	175	125	187
	1 1/2	122	183	130	195	114	171	122	183	119	178	127	190
	1 5/8	124	186	132	199	116	174	124	186	121	182	129	194
	2	132	197	140	210	124	185	132	197	129	193	137	205
	3	151	227	159	239	143	215	151	227	148	222	156	234
Coped at Both Flanges	1 1/4	107	161	107	161	99.9	150	99.9	150	107	161	107	161
	1 3/8	112	168	112	168	105	157	105	157	112	168	112	168
	1 1/2	117	176	117	176	110	165	110	165	117	176	117	176
	1 5/8	122	183	122	183	115	172	115	172	121	182	122	183
	2	132	197	137	205	124	185	129	194	129	193	137	205
	3	151	227	159	239	143	215	151	227	148	222	156	234
Uncoped		205	307	205	307	205	307	205	307	205	307	205	307

Support Available Strength per Inch Thickness, kips/in.

Hole Type	ASD	LRFD
STD/ OVS/ SSLT	409	614

Notes:
STD = Standard holes
OVS = Oversized holes
SSLT = Short-slotted holes transverse to direction of load
N = Threads included
X = Threads excluded
SC = Slip critical

* Tabulated values include 1/4-in. reduction in end distance, L_{eh}, to account for possible undermun in beam length.

Note: Slip-critical bolt values assume no more than one filler has been provided or bolts have been added to distribute loads in the fillers.

Beam $F_y = 50$ ksi, $F_u = 65$ ksi
Angle $F_y = 36$ ksi, $F_u = 58$ ksi

Table 10-1 (continued)
All-Bolted Double-Angle Connections

7/8-in. Bolts

Bolt and Angle Available Strength, kips

2 Rows W12, 10, 8	Bolt Group	Thread Cond.	Hole Type	Angle Thickness, in. 1/4 ASD	1/4 LRFD	5/16 ASD	5/16 LRFD	3/8 ASD	3/8 LRFD	1/2 ASD	1/2 LRFD
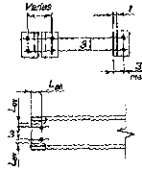	Group A	N	STD	30.5	45.7	38.1	57.1	45.7	68.5	60.9	91.4
		X	STD	30.5	45.7	38.1	57.1	45.7	68.5	60.9	91.4
		SC Class A	STD	30.6	45.7	35.3	52.9	35.3	52.9	35.3	52.9
			OVS	28.3	42.4	30.0	45.0	30.0	45.0	30.0	45.0
			SSLT	30.5	45.7	35.3	52.9	35.3	52.9	35.3	52.9
		SC Class B	STD	30.5	45.7	38.1	57.1	45.7	68.5	58.8	88.1
			OVS	28.3	42.4	35.3	53.0	42.4	63.6	50.1	74.9
			SSLT	30.5	45.7	38.1	57.1	45.7	68.5	58.8	88.1
	Group B	N	STD	30.5	45.7	38.1	57.1	45.7	68.5	60.9	91.4
		X	STD	30.5	45.7	38.1	57.1	45.7	68.5	60.9	91.4
		SC Class A	STD	30.5	45.7	38.1	57.1	44.3	66.4	44.3	66.4
			OVS	28.3	42.4	35.3	53.0	37.8	56.5	37.8	56.5
			SSLT	30.5	45.7	38.1	57.1	44.3	66.4	44.3	66.4
		SC Class B	STD	30.5	45.7	38.1	57.1	45.7	68.5	60.9	91.4
			OVS	28.3	42.4	35.3	53.0	42.4	63.6	56.6	84.8
			SSLT	30.5	45.7	38.1	57.1	45.7	68.5	60.9	91.4

Beam Web Available Strength per Inch Thickness, kips/in.

Hole Type	L_{ev}, in.	STD L_{eh}*, in. 1 1/2 ASD	1 1/2 LRFD	1 3/4 ASD	1 3/4 LRFD	OVS L_{eh}*, in. 1 1/2 ASD	1 1/2 LRFD	1 3/4 ASD	1 3/4 LRFD	SSLT L_{eh}*, in. 1 1/2 ASD	1 1/2 LRFD	1 3/4 ASD	1 3/4 LRFD
Coped at Top Flange Only	1 1/4	78.0	117	86.1	129	72.3	108	80.4	121	75.0	112	83.1	125
	1 3/8	80.4	121	88.6	133	74.8	112	82.9	124	77.4	116	85.5	128
	1 1/2	82.9	124	91.0	137	77.2	116	85.3	128	79.8	120	88.0	132
	1 5/8	85.3	128	93.4	140	79.6	119	87.8	132	82.3	123	90.4	136
	2	92.6	139	101	151	86.9	130	95.1	143	89.6	134	97.7	147
	3	112	168	120	180	106	160	115	172	109	164	117	176
Coped at Both Flanges	1 1/4	68.3	102	68.3	102	63.4	95.1	63.4	95.1	68.3	102	68.3	102
	1 3/8	73.1	110	73.1	110	68.3	102	68.3	102	73.1	110	73.1	110
	1 1/2	78.0	117	78.0	117	73.1	110	73.1	110	78.0	117	78.0	117
	1 5/8	82.9	124	82.9	124	78.0	117	78.0	117	82.3	123	82.9	124
	2	92.6	139	97.5	146	86.9	130	92.6	139	89.6	134	97.5	146
	3	112	168	120	180	106	160	115	172	109	164	117	176
Uncoped		137	205	137	205	137	205	137	205	137	205	137	205

Support Available Strength per Inch Thickness, kips/in.

Hole Type	ASD	LRFD
STD/ OVS/ SSLT	273	410

Notes:
STD = Standard holes
OVS = Oversized holes
SSLT = Short-slotted holes transverse to direction of load
N = Threads included
X = Threads excluded
SC = Slip critical

* Tabulated values include 1/4-in. reduction in end distance, L_{en}, to account for possible underrun in beam length.

Note: Slip-critical bolt values assume no more than one filler has been provided or bolts have been added to distribute loads in the fillers.

Beam F_y = 50 ksi, F_u = 65 ksi
Angle F_y = 36 ksi, F_u = 58 ksi

Table 10-1 (continued)
All-Bolted Double-Angle Connections

1-in. Bolts

Bolt and Angle Available Strength, kips

12 Rows / W44	Bolt Group	Thread Cond.	Hole Type	Angle Thickness, in. 1/4 ASD	1/4 LRFD	5/16 ASD	5/16 LRFD	3/8 ASD	3/8 LRFD	1/2 ASD	1/2 LRFD
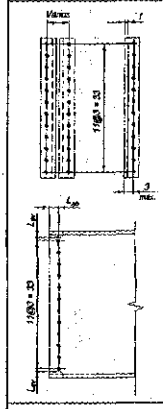	Group A	N	STD	191	287	239	359	287	431	383	574
		X	STD	191	287	239	359	287	431	383	574
		SC Class A	STD	191	287	239	359	277	415	277	415
			OVS	172	258	215	322	236	353	236	353
			SSLT	191	287	239	359	277	415	277	415
		SC Class B	STD	191	287	239	359	287	431	383	574
			OVS	172	258	215	322	258	387	344	515
			SSLT	191	287	239	359	287	431	383	574
	Group B	N	STD	191	287	239	359	287	431	383	574
		X	STD	191	287	239	359	287	431	383	574
		SC Class A	STD	191	287	239	359	287	431	347	521
			OVS	172	258	215	322	258	387	296	443
			SSLT	191	287	239	359	287	431	347	521
		SC Class B	STD	191	287	239	359	287	431	383	574
			OVS	172	258	215	322	258	387	344	515
			SSLT	191	287	239	359	287	431	383	574

Beam Web Available Strength per Inch Thickness, kips/in.

Hole Type	L_{ev}, in.	STD L_{eh}*, in. 1 1/2 ASD	1 1/2 LRFD	1 3/4 ASD	1 3/4 LRFD	OVS L_{eh}*, in. 1 1/2 ASD	1 1/2 LRFD	1 3/4 ASD	1 3/4 LRFD	SSLT L_{eh}*, in. 1 1/2 ASD	1 1/2 LRFD	1 3/4 ASD	1 3/4 LRFD
Coped at Top Flange Only	1 1/4	438	657	446	669	393	589	401	601	434	651	442	663
	1 3/8	440	661	449	673	395	593	403	605	436	654	444	667
	1 1/2	443	664	451	676	398	597	406	609	439	658	447	670
	1 5/8	445	668	453	680	400	600	408	612	441	662	449	674
	2	453	679	461	691	407	611	416	623	449	673	457	685
	3	472	708	480	720	427	640	435	653	468	702	476	714
Coped at Both Flanges	1 1/4	429	644	429	644	385	578	385	578	429	644	429	644
	1 3/8	434	651	434	651	390	585	390	585	434	651	434	651
	1 1/2	439	658	439	658	395	592	395	592	439	658	439	658
	1 5/8	444	665	444	665	400	600	400	600	441	662	444	665
	2	453	679	458	687	407	611	414	622	449	673	457	685
	3	472	708	480	720	427	640	435	653	468	702	476	714
Uncoped		909	1360	909	1360	829	1240	829	1240	909	1360	909	1360

Support Available Strength per Inch Thickness, kips/in.

Hole Type	ASD	LRFD
STD/ SSLT	1820	2730
OVS	1660	2490

Notes:
STD = Standard holes
OVS = Oversized holes
SSLT = Short-slotted holes transverse to direction of load
N = Threads included
X = Threads excluded
SC = Slip critical

* Tabulated values include 1/4-in. reduction in end distance, L_{eh}, to account for possible underrun in beam length.

Note: Slip-critical bolt values assume no more than one filler has been provided or bolts have been added to distribute loads in the fillers.

Beam F_y = 50 ksi, F_u = 65 ksi
Angle F_y = 36 ksi, F_u = 58 ksi

Table 10-1 (continued)
All-Bolted Double-Angle Connections

1-in. Bolts

Bolt and Angle Available Strength, kips

11 Rows W44, 40	Bolt Group	Thread Cond.	Hole Type	Angle Thickness, in. 1/4 ASD	1/4 LRFD	5/16 ASD	5/16 LRFD	3/8 ASD	3/8 LRFD	1/2 ASD	1/2 LRFD
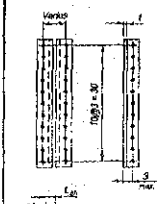	Group A	N	STD	175	263	219	328	263	394	350	525
		X	STD	175	263	219	328	263	394	350	525
		SC Class A	STD	175	263	219	328	254	380	254	380
			OVS	157	236	196	295	216	323	216	323
			SSLT	175	263	219	328	254	380	254	380
		SC Class B	STD	175	263	219	328	263	394	350	525
			OVS	157	236	196	295	236	354	314	471
			SSLT	175	263	219	328	263	394	350	525
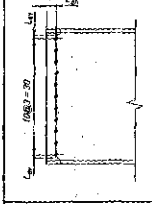	Group B	N	STD	175	263	219	328	263	394	350	525
		X	STD	175	263	219	328	263	394	350	525
		SC Class A	STD	175	263	219	328	263	394	318	477
			OVS	157	236	196	295	236	354	271	406
			SSLT	175	263	219	328	263	394	318	477
		SC Class B	STD	175	263	219	328	263	394	350	525
			OVS	157	236	196	295	236	354	314	471
			SSLT	175	263	219	328	263	394	350	525

Beam Web Available Strength per Inch Thickness, kips/in.

Hole Type	L_{ev}, in.	STD L_{eh}*, in. 1 1/2 ASD	1 1/2 LRFD	1 3/4 ASD	1 3/4 LRFD	OVS L_{eh}*, in. 1 1/2 ASD	1 1/2 LRFD	1 3/4 ASD	1 3/4 LRFD	SSLT L_{eh}*, in. 1 1/2 ASD	1 1/2 LRFD	1 3/4 ASD	1 3/4 LRFD
Coped at Top Flange Only	1 1/4	401	602	410	614	360	540	368	552	397	596	405	608
	1 3/8	404	606	412	618	362	544	371	556	400	600	408	612
	1 1/2	406	609	414	622	365	547	373	559	402	603	410	615
	1 5/8	409	613	417	625	367	551	375	563	405	607	413	619
	2	416	624	424	636	375	562	383	574	412	618	420	630
	3	436	653	444	665	394	591	402	603	431	647	440	659
Coped at Both Flanges	1 1/4	392	589	392	589	352	528	352	528	392	589	392	589
	1 3/8	397	596	397	596	357	536	357	536	397	596	397	596
	1 1/2	402	603	402	603	362	543	362	543	402	603	402	603
	1 5/8	407	611	407	611	367	550	367	550	405	607	407	611
	2	416	624	422	633	375	562	381	572	412	618	420	630
	3	436	653	444	665	394	591	402	603	431	647	440	659
Uncoped		834	1250	834	1250	761	1140	761	1140	834	1250	834	1250

Support Available Strength per Inch Thickness, kips/in.

Hole Type	ASD	LRFD
STD/ SSLT	1670	2500
OVS	1520	2280

Notes:
STD = Standard holes
DVS = Oversized holes
SSLT = Short-slotted holes transverse to direction of load
N = Threads included
X = Threads excluded
SC = Slip critical

* Tabulated values include 1/4-in. reduction in end distance, L_{eh}, to account for possible underrun in beam length.

Note: Slip-critical bolt values assume no more than one filler has been provided or bolts have been added to distribute loads in the fillers.

Beam F_y = 50 ksi, F_u = 65 ksi
Angle F_y = 36 ksi, F_u = 58 ksi

Table 10-1 (continued)
All-Bolted Double-Angle Connections

1-in. Bolts

Bolt and Angle Available Strength, kips

10 Rows W44, 40, 36	Bolt Group	Thread Cond.	Hole Type	Angle Thickness, in. 1/4 ASD	1/4 LRFD	5/16 ASD	5/16 LRFD	3/8 ASD	3/8 LRFD	1/2 ASD	1/2 LRFD
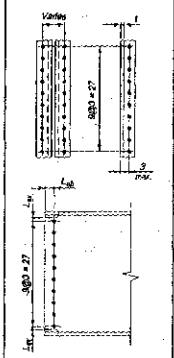	Group A	N	STD	159	238	198	298	238	357	318	476
		X	STD	159	238	198	298	238	357	318	476
		SC Class A	STD	159	238	198	298	231	346	231	346
			OVS	142	214	178	267	196	294	196	294
			SSLT	159	238	198	298	231	346	231	346
		SC Class B	STD	159	238	198	298	238	357	318	476
			OVS	142	214	178	267	214	321	285	427
			SSLT	159	238	198	298	238	357	318	476
	Group B	N	STD	159	238	198	298	238	357	318	476
		X	STD	159	238	198	298	238	357	318	476
		SC Class A	STD	159	238	198	298	238	357	289	434
			OVS	142	214	178	267	214	321	247	369
			SSLT	159	238	198	298	238	357	289	434
		SC Class B	STD	159	238	198	298	238	357	318	476
			OVS	142	214	178	267	214	321	285	427
			SSLT	159	238	198	298	238	357	318	476

Beam Web Available Strength per Inch Thickness, kips/in.

Hole Type	L_{ev}, in.	STD L_{eh}*, in. 1 1/2 ASD	1 1/2 LRFD	1 3/4 ASD	1 3/4 LRFD	OVS L_{eh}*, in. 1 1/2 ASD	1 1/2 LRFD	1 3/4 ASD	1 3/4 LRFD	SSLT L_{eh}*, in. 1 1/2 ASD	1 1/2 LRFD	1 3/4 ASD	1 3/4 LRFD
Coped at Top Flange Only	1 1/4	365	547	373	559	327	491	335	503	361	541	369	553
	1 3/8	367	551	375	563	329	494	338	506	363	545	371	557
	1 1/2	370	555	378	567	332	498	340	510	366	548	374	561
	1 5/8	372	558	380	570	334	502	342	514	368	552	376	564
	2	379	569	388	581	342	512	350	525	375	563	384	575
	3	399	598	407	611	361	542	369	554	395	592	403	605
Coped at Both Flanges	1 1/4	356	534	356	534	319	479	319	479	356	534	356	534
	1 3/8	361	541	361	541	324	486	324	486	361	541	361	541
	1 1/2	366	548	366	548	329	494	329	494	366	548	366	548
	1 5/8	371	556	371	556	334	501	334	501	368	552	371	556
	2	379	569	385	578	342	512	349	523	375	563	384	575
	3	399	598	407	611	361	542	369	554	395	592	403	605
Uncoped		758	1140	758	1140	692	1040	692	1040	758	1140	758	1140

Support Available Strength per Inch Thickness, kips/in.

Hole Type	ASD	LRFD
STD/ SSLT	1520	2270
OVS	1380	2080

Notes:
STD = Standard holes
OVS = Oversized holes
SSLT = Short-slotted holes transverse to direction of load
N = Threads included
X = Threads excluded
SC = Slip critical

* Tabulated values include 1/4-in. reduction in end distance, L_{eh}, to account for possible underrun in beam length.

Note: Slip-critical bolt values assume no more than one filler has been provided or bolts have been added to distribute loads in the fillers.

Beam F_y = 50 ksi, F_u = 65 ksi
Angle F_y = 36 ksi, F_u = 58 ksi

Table 10-1 (continued)
All-Bolted Double-Angle Connections

1-in. Bolts

Bolt and Angle Available Strength, kips

9 Rows W44, 40, 36, 33	Bolt Group	Thread Cond.	Hole Type	Angle Thickness, in. 1/4 ASD	1/4 LRFD	5/16 ASD	5/16 LRFD	3/8 ASD	3/8 LRFD	1/2 ASD	1/2 LRFD
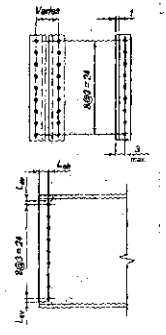	Group A	N	STD	142	214	178	267	214	321	285	427
		X	STD	142	214	178	267	214	321	285	427
		SC Class A	STD	142	214	178	267	207	311	207	311
			OVS	128	192	160	240	177	265	177	265
			SSLT	142	214	178	267	207	311	207	311
		SC Class B	STD	142	214	178	267	214	321	285	427
			OVS	128	192	160	240	192	288	256	383
			SSLT	142	214	178	267	214	321	285	427
	Group B	N	STD	142	214	178	267	214	321	285	427
		X	STD	142	214	178	267	214	321	285	427
		SC Class A	STD	142	214	178	267	214	321	260	391
			OVS	128	192	160	240	192	288	222	332
			SSLT	142	214	178	267	214	321	260	391
		SC Class B	STD	142	214	178	267	214	321	285	427
			OVS	128	192	160	240	192	288	256	383
			SSLT	142	214	178	267	214	321	285	427

Beam Web Available Strength per Inch Thickness, kips/in.

Hole Type	L_{ev}, in.	STD L_{eh}*, in. 1 1/2 ASD	1 1/2 LRFD	1 3/4 ASD	1 3/4 LRFD	OVS L_{eh}*, in. 1 1/2 ASD	1 1/2 LRFD	1 3/4 ASD	1 3/4 LRFD	SSLT L_{eh}*, in. 1 1/2 ASD	1 1/2 LRFD	1 3/4 ASD	1 3/4 LRFD
Coped at Top Flange Only	1 1/4	328	492	336	505	294	441	302	453	324	486	332	498
	1 3/8	331	496	339	508	297	445	305	457	327	490	335	502
	1 1/2	333	500	341	512	299	449	307	461	329	494	337	506
	1 5/8	336	503	344	516	301	452	310	464	332	497	340	509
	2	343	514	351	527	309	463	317	475	339	508	347	520
	3	362	544	371	556	328	492	336	505	358	537	366	550
Coped at Both Flanges	1 1/4	319	479	319	479	286	430	286	430	319	479	319	479
	1 3/8	324	486	324	486	291	437	291	437	324	486	324	486
	1 1/2	329	494	329	494	296	444	296	444	329	494	329	494
	1 5/8	334	501	334	501	301	452	301	452	332	497	334	501
	2	343	514	349	523	309	463	316	473	339	508	347	520
	3	362	544	371	556	328	492	336	505	358	537	366	550
Uncoped		683	1020	683	1020	624	936	624	936	683	1020	683	1020

Support Available Strength per Inch Thickness, kips/in.

Hole Type	ASD	LRFD
STD/ SSLT	1370	2050
OVS	1250	1870

Notes:
STD = Standard holes
OVS = Oversized holes
SSLT = Short-slotted holes transverse to direction of load
N = Threads included
X = Threads excluded
SC = Slip critical

* Tabulated values include 1/4-in. reduction in end distance, L_{eh}, to account for possible underrun in beam length.

Note: Slip-critical bolt values assume no more than one filler has been provided or bolts have been added to distribute loads in the fillers.

Beam F_y = 50 ksi, F_u = 65 ksi
Angle F_y = 36 ksi, F_u = 58 ksi

Table 10-1 (continued)
All-Bolted Double-Angle Connections

1-in. Bolts

Bolt and Angle Available Strength, kips

8 Rows W44, 40, 36, 33, 30	Bolt Group	Thread Cond.	Hole Type	Angle Thickness, in. 1/4 ASD	1/4 LRFD	5/16 ASD	5/16 LRFD	3/8 ASD	3/8 LRFD	1/2 ASD	1/2 LRFD
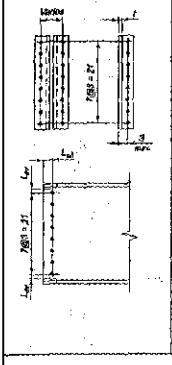	Group A	N	STD	126	189	158	237	189	284	252	378
		X	STD	126	189	158	237	189	284	252	378
		SC Class A	STD	126	189	158	237	184	277	184	277
			OVS	113	170	141	212	157	235	157	235
			SSLT	126	189	158	237	184	277	184	277
		SC Class B	STD	126	189	158	237	189	284	252	378
			OVS	113	170	141	212	170	254	226	339
			SSLT	126	189	158	237	189	284	252	378
	Group B	N	STD	126	189	158	237	189	284	252	378
		X	STD	126	189	158	237	189	284	252	378
		SC Class A	STD	126	189	158	237	189	284	231	347
			OVS	113	170	141	212	170	254	197	295
			SSLT	126	189	158	237	189	284	231	347
		SC Class B	STD	126	189	158	237	189	284	252	378
			OVS	113	170	141	212	170	254	226	339
			SSLT	126	189	158	237	189	284	252	378

Beam Web Available Strength per Inch Thickness, kips/in.

Hole Type	L_{ev}, in.	STD L_{eh}*, in. 1 1/2 ASD	1 1/2 LRFD	1 3/4 ASD	1 3/4 LRFD	OVS L_{eh}*, in. 1 1/2 ASD	1 1/2 LRFD	1 3/4 ASD	1 3/4 LRFD	SSLT L_{eh}*, in. 1 1/2 ASD	1 1/2 LRFD	1 3/4 ASD	1 3/4 LRFD
Coped at Top Flange Only	1 1/4	292	438	300	450	261	392	269	404	288	431	296	444
	1 3/8	294	441	302	453	264	395	272	408	290	435	298	447
	1 1/2	297	445	305	457	266	399	274	411	293	439	301	451
	1 5/8	299	449	307	461	269	403	277	415	295	442	303	455
	2	306	459	314	472	276	414	284	426	302	453	310	466
	3	326	489	334	501	295	443	303	455	322	483	330	495
Coped at Both Flanges	1 1/4	283	424	283	424	254	380	254	380	283	424	283	424
	1 3/8	288	431	288	431	258	388	258	388	288	431	288	431
	1 1/2	293	439	293	439	263	395	263	395	293	439	293	439
	1 5/8	297	446	297	446	268	402	268	402	295	442	297	446
	2	306	459	312	468	276	414	283	424	302	453	310	466
	3	326	489	334	501	295	443	303	455	322	483	330	495
Uncoped		607	910	607	910	556	834	556	834	607	910	607	910

Support Available Strength per Inch Thickness, kips/in.

Hole Type	ASD	LRFD
STD/ SSLT	1210	1820
OVS	1110	1670

Notes:
STD = Standard holes
OVS = Oversized holes
SSLT = Short-slotted holes transverse to direction of load
N = Threads included
X = Threads excluded
SC = Slip critical

* Tabulated values include 1/4-in. reduction in end distance, L_{eh}, to account for possible underrun in beam length.

Note: Slip-critical bolt values assume no more than one filler has been provided or bolts have been added to distribute loads in the fillers.

Beam F_y = 50 ksi, F_u = 65 ksi
Angle F_y = 36 ksi, F_u = 58 ksi

Table 10-1 (continued)
All-Bolted Double-Angle Connections

1-in. Bolts

Bolt and Angle Available Strength, kips

7 Rows W44, 40, 36, 33, 30, 27, 24	Bolt Group	Thread Cond.	Hole Type	Angle Thickness, in. 1/4 ASD	1/4 LRFD	5/16 ASD	5/16 LRFD	3/8 ASD	3/8 LRFD	1/2 ASD	1/2 LRFD
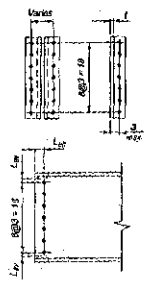	Group A	N	STD	110	165	137	206	165	247	220	330
		X	STD	110	165	137	206	165	247	220	330
		SC Class A	STD	110	165	137	206	161	242	161	242
			OVS	98.4	148	123	185	138	206	138	206
			SSLT	110	165	137	206	161	242	161	242
		SC Class B	STD	110	165	137	206	165	247	220	330
			OVS	98.4	148	123	185	148	221	197	295
			SSLT	110	165	137	206	165	247	220	330
	Group B	N	STD	110	165	137	206	165	247	220	330
		X	STD	110	165	137	206	165	247	220	330
		SC Class A	STD	110	165	137	206	165	247	202	304
			OVS	98.4	148	123	185	148	221	173	258
			SSLT	110	165	137	206	165	247	202	304
		SC Class B	STD	110	165	137	206	165	247	220	330
			OVS	98.4	148	123	185	148	221	197	295
			SSLT	110	165	137	206	165	247	220	330

Beam Web Available Strength per Inch Thickness, kips/in.

Hole Type	L_{ev}, in.	STD L_{eh}*, in. 1 1/2 ASD	1 1/2 LRFD	1 3/4 ASD	1 3/4 LRFD	OVS L_{eh}*, in. 1 1/2 ASD	1 1/2 LRFD	1 3/4 ASD	1 3/4 LRFD	SSLT L_{eh}*, in. 1 1/2 ASD	1 1/2 LRFD	1 3/4 ASD	1 3/4 LRFD
Coped at Top Flange Only	1 1/4	255	383	263	395	228	342	236	355	251	377	259	389
	1 3/8	258	386	266	399	231	346	239	358	254	380	262	392
	1 1/2	260	390	268	402	233	350	241	362	256	384	264	396
	1 5/8	262	394	271	406	236	353	244	366	258	388	267	400
	2	270	405	278	417	243	364	251	377	266	399	274	411
	3	289	434	297	446	262	394	271	406	285	428	293	440
Coped at Both Flanges	1 1/4	246	369	246	369	221	331	221	331	246	369	246	369
	1 3/8	251	377	251	377	225	338	225	338	251	377	251	377
	1 1/2	256	384	256	384	230	346	230	346	256	384	256	384
	1 5/8	261	391	261	391	235	353	235	353	258	388	261	391
	2	270	405	275	413	243	364	250	375	266	399	274	411
	3	289	434	297	446	262	394	271	406	285	428	293	440
Uncoped		531	797	531	797	488	731	488	731	531	797	531	797

Support Available Strength per Inch Thickness, kips/in.

Hole Type	ASD	LRFD
STD/ SSLT	1060	1590
OVS	975	1460

Notes:
STD = Standard holes
OVS = Oversized holes
SSLT = Short-slotted holes transverse to direction of load
N = Threads included
X = Threads excluded
SC = Slip critical

* Tabulated values include 1/4-in. reduction in end distance, L_{eh}, to account for possible underrun in beam length.

Note: Slip-critical bolt values assume no more than one filler has been provided or bolts have been added to distribute loads in the fillers.

Beam F_y = 50 ksi, F_u = 65 ksi
Angle F_y = 36 ksi, F_u = 58 ksi

Table 10-1 (continued)
All-Bolted Double-Angle Connections

1-in. Bolts

Bolt and Angle Available Strength, kips

6 Rows W40, 36, 33, 30, 27, 24, 21	Bolt Group	Thread Cond.	Hole Type	Angle Thickness, in. 1/4 ASD	1/4 LRFD	5/16 ASD	5/16 LRFD	3/8 ASD	3/8 LRFD	1/2 ASD	1/2 LRFD
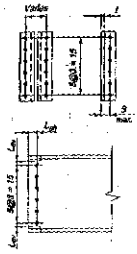	Group A	N	STD	93.5	140	117	175	140	210	187	281
		X	STD	93.5	140	117	175	140	210	187	281
		SC Class A	STD	93.5	140	117	175	138	207	138	207
			OVS	83.7	126	105	157	118	176	118	176
			SSLT	93.5	140	117	175	138	207	138	207
		SC Class B	STD	93.5	140	117	175	140	210	187	281
			OVS	83.7	126	105	157	126	188	167	251
			SSLT	93.5	140	117	175	140	210	187	281
	Group B	N	STD	93.5	140	117	175	140	210	187	281
		X	STD	93.5	140	117	175	140	210	187	281
		SC Class A	STD	93.5	140	117	175	140	210	174	260
			OVS	83.7	126	105	157	126	188	148	221
			SSLT	93.5	140	117	175	140	210	174	260
		SC Class B	STD	93.5	140	117	175	140	210	187	281
			OVS	83.7	126	105	157	126	188	167	251
			SSLT	93.5	140	117	175	140	210	187	281

Beam Web Available Strength per Inch Thickness, kips/in.

Hole Type	L_{ev}, in.	STD L_{eh}*, in. 1 1/2 ASD	1 1/2 LRFD	1 3/4 ASD	1 3/4 LRFD	OVS L_{eh}*, in. 1 1/2 ASD	1 1/2 LRFD	1 3/4 ASD	1 3/4 LRFD	SSLT L_{eh}*, in. 1 1/2 ASD	1 1/2 LRFD	1 3/4 ASD	1 3/4 LRFD
Coped at Top Flange Only	1 1/4	219	328	227	340	195	293	204	305	215	322	223	334
	1 3/8	221	332	229	344	198	297	206	309	217	325	225	338
	1 1/2	223	335	232	347	200	300	208	313	219	329	228	341
	1 5/8	226	339	234	351	203	304	211	316	222	333	230	345
	2	233	350	241	362	210	315	218	327	229	344	237	356
	3	253	379	261	391	230	344	238	356	249	373	257	385
Coped at Both Flanges	1 1/4	210	314	210	314	188	282	188	282	210	314	210	314
	1 3/8	215	322	215	322	193	289	193	289	215	322	215	322
	1 1/2	219	329	219	329	197	296	197	296	219	329	219	329
	1 5/8	224	336	224	336	202	303	202	303	222	333	224	336
	2	233	350	239	358	210	315	217	325	229	344	237	356
	3	253	379	261	391	230	344	238	356	249	373	257	385
Uncoped		456	684	456	684	419	629	419	629	456	684	456	684

Support Available Strength per Inch Thickness, kips/in.

Hole Type	ASD	LRFD
STD/ SSLT	912	1370
OVS	839	1260

Notes:
STD = Standard holes
OVS = Oversized holes
SSLT = Short-slotted holes transverse to direction of load
N = Threads included
X = Threads excluded
SC = Slip critical

* Tabulated values include 1/4-in. reduction in end distance, L_{eh}, to account for possible underrun in beam length.

Note: Slip-critical bolt values assume no more than one filler has been provided or bolts have been added to distribute loads in the fillers.

Beam F_y = 50 ksi, F_u = 65 ksi
Angle F_y = 36 ksi, F_u = 58 ksi

Table 10-1 (continued)
All-Bolted Double-Angle Connections

1-in. Bolts

Bolt and Angle Available Strength, kips

5 Rows W30, 27, 24, 21, 18	Bolt Group	Thread Cond.	Hole Type	Angle Thickness, in. 1/4 ASD	1/4 LRFD	5/16 ASD	5/16 LRFD	3/8 ASD	3/8 LRFD	1/2 ASD	1/2 LRFD
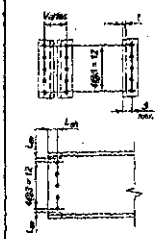	Group A	N	STD	77.2	116	96.5	145	116	174	154	232
		X	STD	77.2	116	96.5	145	116	174	154	232
		SC Class A	STD	77.2	116	96.5	145	115	173	115	173
			OVS	69.1	104	86.3	129	98.2	147	98.2	147
			SSLT	77.2	116	96.5	145	115	173	115	173
		SC Class B	STD	77.2	116	96.5	145	116	174	154	232
			OVS	69.1	104	86.3	129	104	155	138	207
			SSLT	77.2	116	96.5	145	116	174	154	232
	Group B	N	STD	77.2	116	96.5	145	116	174	154	232
		X	STD	77.2	116	96.5	145	116	174	154	232
		SC Class A	STD	77.2	116	96.5	145	116	174	145	217
			OVS	69.1	104	86.3	129	104	155	123	184
			SSLT	77.2	116	96.5	145	116	174	145	217
		SC Class B	STD	77.2	116	96.5	145	116	174	154	232
			OVS	69.1	104	86.3	129	104	155	138	207
			SSLT	77.2	116	96.5	145	116	174	154	232

Beam Web Available Strength per Inch Thickness, kips/in.

Hole Type	L_{ev}, in.	STD L_{eh}*, in. 1 1/2 ASD	1 1/2 LRFD	1 3/4 ASD	1 3/4 LRFD	OVS L_{eh}*, in. 1 1/2 ASD	1 1/2 LRFD	1 3/4 ASD	1 3/4 LRFD	SSLT L_{eh}*, in. 1 1/2 ASD	1 1/2 LRFD	1 3/4 ASD	1 3/4 LRFD
Coped at Top Flange Only	1 1/4	182	273	190	285	163	244	171	256	178	267	186	279
	1 3/8	184	277	193	289	165	247	173	260	180	271	189	283
	1 1/2	187	280	195	293	167	251	176	263	183	274	191	286
	1 5/8	189	284	197	296	170	255	178	267	185	278	193	290
	2	197	295	205	307	177	266	185	278	193	289	201	301
	3	216	324	224	336	197	295	205	307	212	318	220	330
Coped at Both Flanges	1 1/4	173	260	173	260	155	232	155	232	173	260	173	260
	1 3/8	178	267	178	267	160	239	160	239	178	267	178	267
	1 1/2	183	274	183	274	165	247	165	247	183	274	183	274
	1 5/8	188	282	188	282	169	254	169	254	185	278	188	282
	2	197	295	202	303	177	266	184	276	193	289	201	301
	3	216	324	224	336	197	295	205	307	212	318	220	330
Uncoped		380	570	380	570	351	527	351	527	380	570	380	570

Support Available Strength per Inch Thickness, kips/in.

Hole Type	ASD	LRFD
STD/ SSLT	761	1140
OVS	702	1050

Notes:
STD = Standard holes
OVS = Oversized holes
SSLT = Short-slotted holes transverse to direction of load
N = Threads included
X = Threads excluded
SC = Slip critical

* Tabulated values include 1/4-in. reduction in end distance, L_{eh}, to account for possible underrun in beam length.

Note: Slip-critical bolt values assume no more than one filler has been provided or bolts have been added to distribute loads in the fillers.

Beam F_y = 50 ksi, F_u = 65 ksi
Angle F_y = 36 ksi, F_u = 58 ksi

Table 10-1 (continued)
All-Bolted Double-Angle Connections

1-in. Bolts

Bolt and Angle Available Strength, kips

4 Rows W24, 21, 18, 16	Bolt Group	Thread Cond.	Hole Type	Angle Thickness, in. 1/4 ASD	1/4 LRFD	5/16 ASD	5/16 LRFD	3/8 ASD	3/8 LRFD	1/2 ASD	1/2 LRFD
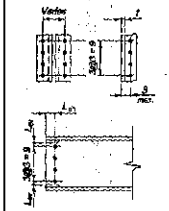	Group A	N	STD	60.9	91.4	76.1	114	91.4	137	122	183
		X	STD	60.9	91.4	76.1	114	91.4	137	122	183
		SC Class A	STD	60.9	91.4	76.1	114	91.4	137	92.2	138
			OVS	54.4	81.6	68.0	102	78.6	118	78.6	118
			SSLT	60.9	91.4	76.1	114	91.4	137	92.2	138
		SC Class B	STD	60.9	91.4	76.1	114	91.4	137	122	183
			OVS	54.4	81.6	68.0	102	81.6	122	109	163
			SSLT	60.9	91.4	76.1	114	91.4	137	122	183
	Group B	N	STD	60.9	91.4	76.1	114	91.4	137	122	183
		X	STD	60.9	91.4	76.1	114	91.4	137	122	183
		SC Class A	STD	60.9	91.4	76.1	114	91.4	137	116	174
			OVS	54.4	81.6	68.0	102	81.6	122	98.6	148
			SSLT	60.9	91.4	76.1	114	91.4	137	116	174
		SC Class B	STD	60.9	91.4	76.1	114	91.4	137	122	183
			OVS	54.4	81.6	68.0	102	81.6	122	109	163
			SSLT	60.9	91.4	76.1	114	91.4	137	122	183

Beam Web Available Strength per Inch Thickness, kips/in.

Hole Type	L_{eh}, in.	STD L_{eh}*, in. 1 1/2 ASD	1 1/2 LRFD	1 3/4 ASD	1 3/4 LRFD	OVS L_{eh}*, in. 1 1/2 ASD	1 1/2 LRFD	1 3/4 ASD	1 3/4 LRFD	SSLT L_{eh}*, in. 1 1/2 ASD	1 1/2 LRFD	1 3/4 ASD	1 3/4 LRFD
Coped at Top Flange Only	1 1/4	145	218	154	230	130	194	138	207	141	212	150	224
	1 3/8	148	222	156	234	132	198	140	210	144	216	152	228
	1 1/2	150	225	158	238	134	202	143	214	146	219	154	232
	1 5/8	153	229	161	241	137	205	145	218	149	223	157	235
	2	160	240	168	252	144	216	152	229	156	234	164	246
	3	180	269	188	282	164	246	172	258	176	263	184	275
Coped at Both Flanges	1 1/4	137	205	137	205	122	183	122	183	137	205	137	205
	1 3/8	141	212	141	212	127	190	127	190	141	212	141	212
	1 1/2	146	219	146	219	132	197	132	197	146	219	146	219
	1 5/8	151	227	151	227	137	205	137	205	149	223	151	227
	2	160	240	166	249	144	216	151	227	156	234	164	246
	3	180	269	188	282	164	246	172	258	176	263	184	275
Uncoped		305	457	305	457	283	424	283	424	305	457	305	457

Support Available Strength per Inch Thickness, kips/in.

Hole Type	ASD	LRFD
STD/ SSLT	609	914
OVS	566	848

Notes:
STD = Standard holes
OVS = Oversized holes
SSLT = Short-slotted holes transverse to direction of load
N = Threads included
X = Threads excluded
SC = Slip critical

* Tabulated values include 1/4-in. reduction in end distance, L_{eh}, to account for possible underrun in beam length.

Note: Slip-critical bolt values assume no more than one filler has been provided or bolts have been added to distribute loads in the fillers.

Beam F_y = 50 ksi, F_u = 65 ksi
Angle F_y = 36 ksi, F_u = 58 ksi

Table 10-1 (continued)
All-Bolted Double-Angle Connections

1-in. Bolts

Bolt and Angle Available Strength, kips

3 Rows W18, 16, 14, 12, 10* *Ltd. to W10x12, 15, 17, 19, 22, 26, 30	Bolt Group	Thread Cond.	Hole Type	Angle Thickness, in. 1/4 ASD	1/4 LRFD	5/16 ASD	5/16 LRFD	3/8 ASD	3/8 LRFD	1/2 ASD	1/2 LRFD
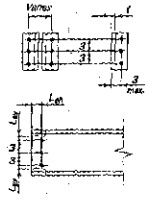	Group A	N	STD	44.6	66.9	55.7	83.6	66.9	100	89.2	134
		X	STD	44.6	66.9	55.7	83.6	66.9	100	89.2	134
		SC Class A	STD	44.6	66.9	55.7	83.6	66.9	100	69.2	104
			OVS	39.7	59.5	49.6	74.4	58.9	88.2	58.9	88.2
			SSLT	44.6	66.9	55.7	83.6	66.9	100	69.2	104
		SC Class B	STD	44.6	66.9	55.7	83.6	66.9	100	89.2	134
			OVS	39.7	59.5	49.6	74.4	59.5	89.3	79.4	119
			SSLT	44.6	66.9	55.7	83.6	66.9	100	89.2	134
	Group B	N	STD	44.6	66.9	55.7	83.6	66.9	100	89.2	134
		X	STD	44.6	66.9	55.7	83.6	66.9	100	89.2	134
		SC Class A	STD	44.6	66.9	55.7	83.6	66.9	100	86.8	130
			OVS	39.7	59.5	49.6	74.4	59.5	89.3	74.0	111
			SSLT	44.6	66.9	55.7	83.6	66.9	100	86.8	130
		SC Class B	STD	44.6	66.9	55.7	83.6	66.9	100	89.2	134
			OVS	39.7	59.5	49.6	74.4	59.5	89.3	79.4	119
			SSLT	44.6	66.9	55.7	83.6	66.9	100	89.2	134

Beam Web Available Strength per Inch Thickness, kips/in.

Hole Type	L_{ev} in.	STD L_{eb}*, in. 1 1/2 ASD	1 1/2 LRFD	1 3/4 ASD	1 3/4 LRFD	OVS L_{eb}*, in. 1 1/2 ASD	1 1/2 LRFD	1 3/4 ASD	1 3/4 LRFD	SSLT L_{eb}*, in. 1 1/2 ASD	1 1/2 LRFD	1 3/4 ASD	1 3/4 LRFD
Coped at Top Flange Only	1 1/4	109	163	117	176	96.7	145	105	157	105	157	113	169
	1 3/8	111	167	119	179	99.1	149	107	161	107	161	115	173
	1 1/2	114	171	122	183	102	152	110	165	110	165	118	177
	1 5/8	116	174	124	186	104	156	112	168	112	168	120	180
	2	124	185	132	197	111	167	119	179	119	179	128	191
	3	143	215	151	227	131	196	139	208	139	208	147	221
Coped at Both Flanges	1 1/4	99.9	150	99.9	150	89.0	133	89.0	133	99.9	150	99.9	150
	1 3/8	105	157	105	157	93.8	141	93.8	141	105	157	105	157
	1 1/2	110	165	110	165	98.7	148	98.7	148	110	165	110	165
	1 5/8	115	172	115	172	104	155	104	155	112	168	115	172
	2	124	185	129	194	111	167	118	177	119	179	128	191
	3	143	215	151	227	131	196	139	208	139	208	147	221
Uncoped		229	344	229	344	215	322	215	322	229	344	229	344

Support Available Strength per Inch Thickness, kips/in.

Hole Type	ASD	LRFD
STD/ SSLT	456	687
OVS	429	644

Notes:
STD = Standard holes
OVS = Oversized holes
SSLT = Short-slotted holes transverse to direction of load
N = Threads included
X = Threads excluded
SC = Slip critical

* Tabulated values include 1/4-in. reduction in end distance, L_{eh}, to account for possible underrun in beam length.

Note: Slip-critical bolt values assume no more than one filler has been provided or bolts have been added to distribute loads in the fillers.

Beam F_y = 50 ksi, F_u = 65 ksi
Angle F_y = 36 ksi, F_u = 58 ksi

Table 10-1 (continued)
All-Bolted Double-Angle Connections

1-in. Bolts

Bolt and Angle Available Strength, kips

2 Rows W12, 10, 8	Bolt Group	Thread Cond.	Hole Type	Angle Thickness, in. 1/4 ASD	1/4 LRFD	5/16 ASD	5/16 LRFD	3/8 ASD	3/8 LRFD	1/2 ASD	1/2 LRFD
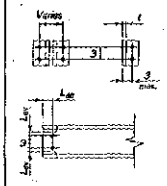	Group A	N	STD	28.3	42.4	35.3	53.0	42.4	63.6	56.6	84.8
		X	STD	28.3	42.4	35.3	53.0	42.4	63.6	56.6	84.8
		SC Class A	STD	28.3	42.4	35.3	53.0	42.4	63.6	46.1	69.2
			OVS	25.0	37.5	31.3	46.9	37.5	56.3	39.3	58.8
			SSLT	28.3	42.4	35.3	53.0	42.4	63.6	46.1	69.2
		SC Class B	STD	28.3	42.4	35.3	53.0	42.4	63.6	56.6	84.8
			OVS	25.0	37.5	31.3	46.9	37.5	56.3	50.0	75.0
			SSLT	28.3	42.4	35.3	53.0	42.4	63.6	56.6	84.8
	Group B	N	STD	28.3	42.4	35.3	53.0	42.4	63.6	56.6	84.8
		X	STD	28.3	42.4	35.3	53.0	42.4	63.6	56.6	84.8
		SC Class A	STD	28.3	42.4	35.3	53.0	42.4	63.6	56.6	84.8
			OVS	25.0	37.5	31.3	46.9	37.5	56.3	49.3	73.8
			SSLT	28.3	42.4	35.3	53.0	42.4	63.6	56.6	84.8
		SC Class B	STD	28.3	42.4	35.3	53.0	42.4	63.6	56.6	84.8
			OVS	25.0	37.5	31.3	46.9	37.5	56.3	50.0	75.0
			SSLT	28.3	42.4	35.3	53.0	42.4	63.6	56.6	84.8

Beam Web Available Strength per Inch Thickness, kips/in.

Hole Type	L_{ev}, in.	STD L_{eh}*, in. 1 1/2 ASD	1 1/2 LRFD	1 3/4 ASD	1 3/4 LRFD	OVS L_{eh}*, in. 1 1/2 ASD	1 1/2 LRFD	1 3/4 ASD	1 3/4 LRFD	SSLT L_{eh}*, in. 1 1/2 ASD	1 1/2 LRFD	1 3/4 ASD	1 3/4 LRFD
Coped at Top Flange Only	1 1/4	72.3	108	80.4	121	63.8	95.7	71.9	108	68.3	102	76.4	115
	1 3/8	74.8	112	82.9	124	66.2	99.3	74.3	112	70.7	106	78.8	118
	1 1/2	77.2	116	85.3	128	68.7	103	76.8	115	73.1	110	81.3	122
	1 5/8	79.6	119	87.8	132	71.1	107	79.2	119	75.6	113	83.7	126
	2	86.9	130	95.1	143	78.4	118	86.5	130	82.9	124	91.0	137
	3	106	160	115	172	97.9	147	106	159	102	154	111	166
Coped at Both Flanges	1 1/4	63.4	95.1	63.4	95.1	56.1	84.1	56.1	84.1	63.4	95.1	63.4	95.1
	1 3/8	68.3	102	68.3	102	60.9	91.4	60.9	91.4	68.3	102	68.3	102
	1 1/2	73.1	110	73.1	110	65.8	98.7	65.8	98.7	73.1	110	73.1	110
	1 5/8	78.0	117	78.0	117	70.7	106	70.7	106	75.6	113	78.0	117
	2	86.9	130	92.6	139	78.4	118	85.3	128	82.9	124	91.0	137
	3	106	160	115	172	97.9	147	106	159	102	154	111	166
Uncoped		154	230	154	230	146	219	146	219	154	230	154	230

Support Available Strength per Inch Thickness, kips/in.

Hole Type	ASD	LRFD
STD/ SSLT	307	461
OVS	293	439

Notes:
STD = Standard holes
OVS = Oversized holes
SSLT = Short-slotted holes transverse to direction of load
N = Threads included
X = Threads excluded
SC = Slip critical

* Tabulated values include 1/4-in. reduction in end distance, L_{eh}, to account for possible underrun in beam length.

Note: Slip-critical bolt values assume no more than one filler has been provided or bolts have been added to distribute loads in the fillers.

Table 10-2
Available Weld Strength of Bolted/Welded Double-Angle Connections

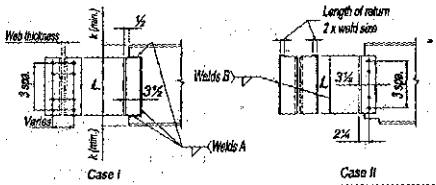

n	L, in.	Welds A (70 ksi)				Welds B (70 ksi)			
		Weld Size, in.	R_n/Ω kips ASD	ϕR_n kips LRFD	Minimum Web Thickness, in.	Weld Size, in.	R_n/Ω kips ASD	ϕR_n kips LRFD	Minimum Support Thickness, in.
12	35½	5/16	393	589	0.476	3/8	366	550	0.286
		1/4	314	471	0.381	5/16	305	458	0.238
		3/16	236	353	0.286	1/4	244	366	0.190
11	32½	5/16	365	548	0.476	3/8	331	496	0.286
		1/4	292	438	0.381	5/16	276	414	0.238
		3/16	219	329	0.286	1/4	221	331	0.190
10	29½	5/16	337	505	0.476	3/8	295	443	0.286
		1/4	269	404	0.381	5/16	246	369	0.238
		3/16	202	303	0.286	1/4	197	295	0.190
9	26½	5/16	309	463	0.476	3/8	259	389	0.286
		1/4	247	371	0.381	5/16	216	324	0.238
		3/16	185	278	0.286	1/4	173	259	0.190
8	23½	5/16	281	422	0.476	3/8	223	335	0.286
		1/4	225	337	0.381	5/16	186	279	0.238
		3/16	169	253	0.286	1/4	149	223	0.190
7	20½	5/16	253	379	0.476	3/8	187	280	0.286
		1/4	202	303	0.381	5/16	156	234	0.238
		3/16	152	227	0.286	1/4	125	187	0.190
6	17½	5/16	222	334	0.476	3/8	150	226	0.286
		1/4	178	267	0.381	5/16	125	188	0.238
		3/16	133	200	0.286	1/4	100	150	0.190
5	14½	5/16	191	287	0.476	3/8	115	172	0.286
		1/4	153	229	0.381	5/16	95.5	143	0.238
		3/16	115	172	0.286	1/4	76.4	115	0.190
4	11½	5/16	158	237	0.476	3/8	79.9	120	0.286
		1/4	127	190	0.381	5/16	66.6	99.9	0.238
		3/16	95.0	142	0.286	1/4	53.3	79.9	0.190
3	8½	5/16	122	184	0.476	3/8	48.1	72.2	0.286
		1/4	98.0	147	0.381	5/16	40.1	60.2	0.238
		3/16	73.5	110	0.286	1/4	32.1	48.1	0.190
2	5½	5/16	83.7	125	0.476	3/8	21.9	32.8	0.286
		1/4	66.9	100	0.381	5/16	18.2	27.3	0.238
		3/16	50.2	75.3	0.286	1/4	14.6	21.9	0.190

ASD	LRFD	Beam	
$\Omega = 2.00$	$\phi = 0.75$	$F_y = 50$ ksi	$F_u = 65$ ksi

Table 10-3
Available Weld Strength of All-Welded Double-Angle Connections

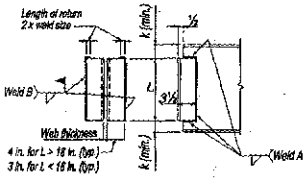

L, in.	Welds A (70 ksi)				Welds B (70 ksi)			
	Weld Size, in.	R_n/Ω kips ASD	ϕR_n kips LRFD	Minimum Web Thickness, in.	Weld Size, in.	R_n/Ω kips ASD	ϕR_n kips LRFD	Minimum Web Thickness, in.
36	5/16	397	596	0.476	3/8	372	558	0.286
	1/4	318	477	0.381	5/16	310	465	0.238
	3/16	238	357	0.286	1/4	248	372	0.190
34	5/16	379	568	0.476	3/8	349	523	0.286
	1/4	303	455	0.381	5/16	291	436	0.238
	3/16	227	341	0.286	1/4	232	349	0.190
32	5/16	360	541	0.476	3/8	325	487	0.286
	1/4	288	432	0.381	5/16	271	406	0.238
	3/16	216	324	0.286	1/4	217	325	0.190
30	5/16	341	512	0.476	3/8	301	452	0.286
	1/4	273	410	0.381	5/16	251	377	0.238
	3/16	205	307	0.286	1/4	201	301	0.190
28	5/16	323	484	0.476	3/8	277	416	0.286
	1/4	258	387	0.381	5/16	231	347	0.238
	3/16	194	291	0.286	1/4	185	277	0.190
26	5/16	304	457	0.476	3/8	253	380	0.286
	1/4	243	365	0.381	5/16	211	317	0.238
	3/16	183	274	0.286	1/4	169	253	0.190
24	5/16	286	429	0.476	3/8	229	344	0.286
	1/4	229	343	0.381	5/16	191	286	0.238
	3/16	171	257	0.286	1/4	153	229	0.190
22	5/16	267	401	0.476	3/8	205	308	0.286
	1/4	214	321	0.381	5/16	171	256	0.238
	3/16	160	240	0.286	1/4	137	205	0.190
20	5/16	248	372	0.476	3/8	181	271	0.286
	1/4	198	297	0.381	5/16	151	226	0.238
	3/16	149	223	0.286	1/4	121	181	0.190
18	5/16	227	341	0.476	3/8	157	235	0.286
	1/4	182	273	0.381	5/16	130	196	0.238
	3/16	136	205	0.286	1/4	104	157	0.190
16	5/16	207	310	0.476	3/8	148	222	0.286
	1/4	166	248	0.381	5/16	123	185	0.238
	3/16	124	186	0.286	1/4	98.5	148	0.190

ASD	LRFD	Beam	
$\Omega = 2.00$	$\phi = 0.75$	$F_y = 50$ ksi	$F_u = 65$ ksi

Table 10-3 (continued)

Available Weld Strength of All-Welded Double-Angle Connections

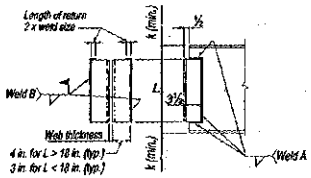

L, in.	Welds A (70 ksi)				Welds B (70 ksi)			
	Weld Size, in.	R_n/Ω kips ASD	ϕR_n kips LRFD	Minimum Web Thickness, in.	Weld Size, in.	R_n/Ω kips ASD	ϕR_n kips LRFD	Minimum Web Thickness, in.
14	5/16	186	279	0.476	3/8	123	185	0.286
	1/4	149	223	0.381	5/16	103	154	0.238
	3/16	111	167	0.286	1/4	82.3	123	0.190
12	5/16	164	246	0.476	3/8	99.3	149	0.286
	1/4	131	197	0.381	5/16	82.8	124	0.238
	3/16	98.5	148	0.286	1/4	66.2	99.3	0.190
10	5/16	141	211	0.476	3/8	75.7	113	0.286
	1/4	112	169	0.381	5/16	63.1	94.6	0.238
	3/16	84.3	127	0.286	1/4	50.4	75.7	0.190
9	5/16	129	193	0.476	3/8	64.2	96.3	0.286
	1/4	103	154	0.381	5/16	53.5	80.2	0.238
	3/16	77.2	116	0.286	1/4	42.8	64.2	0.190
8	5/16	116	174	0.476	3/8	53.0	79.5	0.286
	1/4	92.9	139	0.381	5/16	44.2	66.3	0.238
	3/16	69.7	105	0.286	1/4	35.4	53.0	0.190
7	5/16	103	155	0.476	3/8	42.4	63.6	0.286
	1/4	82.6	124	0.381	5/16	35.3	53.0	0.238
	3/16	62.0	92.9	0.286	1/4	28.3	42.4	0.190
6	5/16	90.4	136	0.476	3/8	32.5	48.7	0.286
	1/4	72.3	108	0.381	5/16	27.0	40.6	0.238
	3/16	54.2	81.3	0.286	1/4	21.6	32.5	0.190
5	5/16	77.1	116	0.476	3/8	23.4	35.1	0.286
	1/4	61.7	92.6	0.381	5/16	19.5	29.2	0.238
	3/16	46.3	69.4	0.286	1/4	15.6	23.4	0.190
4	5/16	64.2	96.3	0.476	3/8	15.5	23.2	0.286
	1/4	51.4	77.0	0.381	5/16	12.9	19.3	0.238
	3/16	38.5	57.8	0.286	1/4	10.3	15.5	0.190

ASD	LRFD	Beam	
$\Omega = 2.00$	$\phi = 0.75$	$F_y = 50$ ksi	$F_u = 65$ ksi

SHEAR END-PLATE CONNECTIONS

A shear end-plate connection is made with a plate length less than the supported beam depth, as illustrated in Figure 10-6. The end plate is always shop-welded to the beam web with fillet welds on each side and usually field-bolted to the supporting member. Welds connecting the end plate to the beam web should not be returned across the thickness of the beam web at the top or bottom of the end plate because of the danger of creating a notch in the beam web.

If the end plate is field-welded to the support, adequate flexibility must be provided in the connection. Line welds are placed along the vertical edges of the plate with a return at the top per AISC *Specification* Section J2.2b. Note that welding across the entire top of the plate must be avoided as it would inhibit the flexibility and, therefore, the necessary end rotation of the connection. The performance of the resulting connection would not be as intended for simple shear connections.

Design Checks

The available strength of a shear end-plate connection is determined from the applicable limit states for bolts (see Part 7), welds (see Part 8), and connecting elements (see Part 9). Note that the limit state of shear rupture of the beam web must be checked along the length of weld connecting the end plate to the beam web. In all cases, the available strength, ϕR_n or R_n/Ω, must equal or exceed the required strength, R_u or R_a.

Recommended End-Plate Dimensions and Thickness

To provide for stability during erection, it is recommended that the minimum end-plate length be one-half the T-dimension of the beam to be supported. The maximum length of the end plate must be compatible with the clear distance between the flanges of an uncoped beam and the remaining clear distance of a coped beam.

To provide for flexibility, the combination of plate thickness and gage should be consistent with the recommendations given previously for a double-angle connection of similar thickness and gage.

Shop and Field Practices

When framing to a column web, the associated constructability considerations should be addressed (see the preceding discussion under "Constructability Considerations").

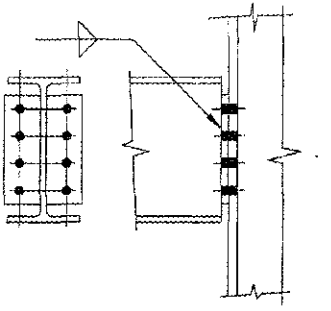

Fig. 10-6. Shear end-plate connections.

When framing to a column flange, provision must be made for possible mill variation in the depth of the columns, particularly in fairly long runs (i.e., six or more bays of framing). The beam length can be shortened to provide for mill overrun with shims furnished at the appropriate intervals to fill the resulting gaps or to provide for mill underrun. Shear end-plate connections require close control in cutting the beam to the proper length and in squaring the beam ends such that both end plates are parallel, particularly when beams are cambered.

DESIGN TABLE DISCUSSION (TABLE 10-4)

Table 10-4. Bolted/Welded Shear End-Plate Connections

Table 10-4 is a design aid for shear end-plate connections bolted to the supporting member and welded to the supported beam. Available strengths are tabulated for supported and supporting member material with $F_y = 50$ ksi and $F_u = 65$ ksi, and end-plate material with $F_y = 36$ ksi and $F_u = 58$ ksi. Electrode strength is assumed to be 70 ksi. All values, including slip-critical bolt available strengths, are for comparison with the governing LRFD or ASD load combination.

Tabulated bolt and end-plate available strengths consider the limit states of bolt shear, bolt bearing on the end plate, shear yielding of the end plate, shear rupture of the end plate, and block shear rupture of the end plate. Values are included for 2 through 12 rows of $^3/_4$-in., $^7/_8$-in. and 1-in.-diameter Group A and Group B bolts at 3-in. spacing. End-plate edge distances, L_{ev} and L_{eh}, are assumed to be $1^1/_4$ in.

Tabulated weld available strengths consider the limit state of weld shear assuming an effective weld length equal to the end-plate length minus twice the weld size. The tabulated minimum beam web thickness matches the shear rupture strength of the web material to the strength of the weld metal. As derived in Part 9, the minimum supported beam web thickness for two lines of weld is

$$t_{min} = \frac{6.19D}{F_u} \tag{9-3}$$

where D is the number of sixteenths-of-an-inch in the weld size. When less than the minimum material thickness is present, the tabulated weld available strength must be reduced by the ratio of the thickness provided to the minimum thickness.

Tabulated supporting member available strengths, per in. of flange or web thickness, consider the limit state of bolt bearing.

W44

Table 10-4
Bolted/Welded Shear End-Plate Connections

3/4-in. Bolts
12 Rows
L = 35 1/2 in.

Bolt and End-Plate Available Strength, kips								
Bolt Group	Thread Cond.	Hole Type	End-Plate Thickness, in.					
			1/4		5/16		3/8	
			ASD	LRFD	ASD	LRFD	ASD	LRFD
Group A	N	STD	197	295	246	369	286	430
	X	STD	197	295	246	369	295	443
	SC Class A	STD	152	228	152	228	152	228
		OVS	129	194	129	194	129	194
		SSLT	152	228	152	228	152	228
	SC Class B	STD	197	295	246	369	253	380
		OVS	196	294	216	323	216	323
		SSLT	195	293	244	366	253	380
Group B	N	STD	197	295	246	369	295	443
	X	STD	197	295	246	369	295	443
	SC Class A	STD	190	285	190	285	190	285
		OVS	162	242	162	242	162	242
		SSLT	190	285	190	285	190	285
	SC Class B	STD	197	295	246	369	295	443
		OVS	196	294	245	367	270	403
		SSLT	195	293	244	366	293	440

Weld and Beam Web Available Strength, kips				Support Available Strength per Inch Thickness, kip/in.	
70-ksi Weld Size, in.	Minimum Beam Web Thickness, in.	R_n/Ω kips ASD	ϕR_n kips LRFD	ASD	LRFD
3/16	0.286	196	293	1400	2110
1/4	0.381	260	390		
5/16	0.476	324	486		
3/8	0.571	387	581		

STD = Standard holes
OVS = Oversized holes
SSLT = Short-slotted holes transverse to direction of load

N = Threads included
X = Threads excluded
SC = Slip critical

End-Plate	Beam
F_y = 36 ksi F_u = 58 ksi	F_y = 50 ksi F_u = 65 ksi

Note: Slip-critical bolt values assume no more than one filler has been provided or bolts have been added to distribute loads in the fillers.

3/4-in. Bolts
11 Rows
***L* = 32½ in.**

Table 10-4 (continued)
Bolted/Welded Shear End-Plate Connections

W44, 40

Bolt and End-Plate Available Strength, kips

Bolt Group	Thread Cond.	Hole Type	End-Plate Thickness, in.					
			1/4		5/16		3/8	
			ASD	LRFD	ASD	LRFD	ASD	LRFD
Group A	N	STD	181	271	226	338	263	394
	X	STD	181	271	226	338	271	406
	SC Class A	STD	139	209	139	209	139	209
		OVS	119	178	119	178	119	178
		SSLT	139	209	139	209	139	209
	SC Class B	STD	181	271	226	338	232	348
		OVS	180	269	198	296	198	296
		SSLT	179	269	224	336	232	348
Group B	N	STD	181	271	226	338	271	406
	X	STD	181	271	226	338	271	406
	SC Class A	STD	174	261	174	261	174	261
		OVS	148	222	148	222	148	222
		SSLT	174	261	174	261	174	261
	SC Class B	STD	181	271	226	338	271	406
		OVS	180	269	225	337	247	370
		SSLT	179	269	224	336	269	403

Weld and Beam Web Available Strength, kips

70-ksi Weld Size, in.	Minimum Beam Web Thickness, in.	R_n/Ω kips	ϕR_n kips
		ASD	LRFD
3/16	0.286	179	268
1/4	0.381	238	356
5/16	0.476	296	444
3/8	0.571	354	530

Support Available Strength per Inch Thickness, kip/in.

ASD	LRFD
1290	1930

STD = Standard holes
OVS = Oversized holes
SSLT = Short-slotted holes transverse to direction of load

N = Threads included
X = Threads excluded
SC = Slip critical

End-Plate	Beam
F_y = 36 ksi F_u = 58 ksi	F_y = 50 ksi F_u = 65 ksi

Note: Slip-critical bolt values assume no more than one filler has been provided or bolts have been added to distribute loads in the fillers.

W44, 40, 36

Table 10-4 (continued)
Bolted/Welded Shear End-Plate Connections

3/4-in. Bolts
10 Rows
L = 29 1/2 in.

Bolt and End-Plate Available Strength, kips

Bolt Group	Thread Cond.	Hole Type	End-Plate Thickness, in.					
			1/4		5/16		3/8	
			ASD	LRFD	ASD	LRFD	ASD	LRFD
Group A	N	STD	164	246	205	308	239	358
	X	STD	164	246	205	308	246	370
	SC Class A	STD	127	190	127	190	127	190
		OVS	108	161	108	161	108	161
		SSLT	127	190	127	190	127	190
	SC Class B	STD	164	246	205	308	211	316
		OVS	163	245	180	269	180	269
		SSLT	163	244	204	306	211	316
Group B	N	STD	164	246	205	308	246	370
	X	STD	164	246	205	308	246	370
	SC Class A	STD	158	237	158	237	158	237
		OVS	135	202	135	202	135	202
		SSLT	158	237	158	237	158	237
	SC Class B	STD	164	246	205	308	246	370
		OVS	163	245	204	306	225	336
		SSLT	163	244	204	306	244	367

Weld and Beam Web Available Strength, kips

70-ksi Weld Size, in.	Minimum Beam Web Thickness, in.	R_n/Ω kips ASD	ϕR_n kips LRFD
3/16	0.286	162	243
1/4	0.381	215	323
5/16	0.476	268	402
3/8	0.571	320	480

Support Available Strength per Inch Thickness, kip/in.

ASD	LRFD
1170	1760

STD = Standard holes
OVS = Oversized holes
SSLT = Short-slotted holes transverse to direction of load
N = Threads included
X = Threads excluded
SC = Slip critical

End-Plate	Beam
F_y = 36 ksi F_u = 58 ksi	F_y = 50 ksi F_u = 65 ksi

Note: Slip-critical bolt values assume no more than one filler has been provided or bolts have been added to distribute loads in the fillers.

3/4-in. Bolts
9 Rows
***L* = 26½ in.**

Table 10-4 (continued)
Bolted/Welded Shear End-Plate Connections

W44, 40, 36, 33

Bolt and End-Plate Available Strength, kips

Bolt Group	Thread Cond.	Hole Type	End-Plate Thickness, in.					
			1/4		5/16		3/8	
			ASD	LRFD	ASD	LRFD	ASD	LRFD
Group A	N	STD	148	222	185	278	215	322
	X	STD	148	222	185	278	222	333
	SC Class A	STD	114	171	114	171	114	171
		OVS	97.1	145	97.1	145	97.1	145
		SSLT	114	171	114	171	114	171
	SC Class B	STD	148	222	185	278	190	285
		OVS	147	221	162	242	162	242
		SSLT	147	220	183	275	190	285
Group B	N	STD	148	222	185	278	222	333
	X	STD	148	222	185	278	222	333
	SC Class A	STD	142	214	142	214	142	214
		OVS	121	182	121	182	121	182
		SSLT	142	214	142	214	142	214
	SC Class B	STD	148	222	185	278	222	333
		OVS	147	221	184	276	202	303
		SSLT	147	220	183	275	220	330

Weld and Beam Web Available Strength, kips

70-ksi Weld Size, in.	Minimum Beam Web Thickness, in.	R_n/Ω kips	ϕR_n kips	Support Available Strength per Inch Thickness, kip/in.	
		ASD	LRFD	ASD	LRFD
3/16	0.286	145	218	1050	1580
1/4	0.381	193	290		
5/16	0.476	240	360		
3/8	0.571	287	430		

STD = Standard holes
OVS = Oversized holes
SSLT = Short-slotted holes transverse to direction of load

N = Threads included
X = Threads excluded
SC = Slip critical

End-Plate	Beam
F_y = 36 ksi F_u = 58 ksi	F_y = 50 ksi F_u = 65 ksi

Note: Slip-critical bolt values assume no more than one filler has been provided or bolts have been added to distribute loads in the fillers.

W44, 40, 36, 33, 30

Table 10-4 (continued)
Bolted/Welded Shear End-Plate Connections

$^3/_4$-in. Bolts
8 Rows
L = 23$^1/_2$ in.

Bolt and End-Plate Available Strength, kips

Bolt Group	Thread Cond.	Hole Type	End-Plate Thickness, in.					
			$^1/_4$		$^5/_{16}$		$^3/_8$	
			ASD	LRFD	ASD	LRFD	ASD	LRFD
Group A	N	STD	132	198	165	247	191	286
	X	STD	132	198	165	247	198	297
	SC Class A	STD	101	152	101	152	101	152
		OVS	86.3	129	86.3	129	86.3	129
		SSLT	101	152	101	152	101	152
	SC Class B	STD	132	198	165	247	169	253
		OVS	131	197	144	215	144	215
		SSLT	131	196	163	245	169	253
Group B	N	STD	132	198	165	247	198	297
	X	STD	132	198	165	247	198	297
	SC Class A	STD	127	190	127	190	127	190
		OVS	108	161	108	161	108	161
		SSLT	127	190	127	190	127	190
	SC Class B	STD	132	198	165	247	198	297
		OVS	131	197	164	246	180	269
		SSLT	131	196	163	245	196	294

Weld and Beam Web Available Strength, kips

70-ksi Weld Size, in.	Minimum Beam Web Thickness, in.	R_n/Ω kips	ϕR_n kips	Support Available Strength per Inch Thickness, kip/in.	
		ASD	LRFD	ASD	LRFD
$^3/_{16}$	0.286	129	193	936	1400
$^1/_4$	0.381	171	256		
$^5/_{16}$	0.476	212	318		
$^3/_8$	0.571	253	380		

STD = Standard holes
OVS = Oversized holes
SSLT = Short-slotted holes transverse to direction of load
N = Threads included
X = Threads excluded
SC = Slip critical

End-Plate	Beam
F_y = 36 ksi F_u = 58 ksi	F_y = 50 ksi F_u = 65 ksi

Note: Slip-critical bolt values assume no more than one filler has been provided or bolts have been added to distribute loads in the fillers.

3/4-in. Bolts
7 Rows
L = 20 1/2 in.

Table 10-4 (continued)
Bolted/Welded Shear End-Plate Connections

W44, 40, 36, 33, 30, 27, 24

Bolt and End-Plate Available Strength, kips

Bolt Group	Thread Cond.	Hole Type	End-Plate Thickness, in.					
			1/4		5/16		3/8	
			ASD	LRFD	ASD	LRFD	ASD	LRFD
Group A	N	STD	116	174	145	217	167	251
	X	STD	116	174	145	217	174	260
	SC Class A	STD	88.6	133	88.6	133	88.6	133
		OVS	75.5	113	75.5	113	75.5	113
		SSLT	88.6	133	88.6	133	88.6	133
	SC Class B	STD	116	174	145	217	148	221
		OVS	115	172	126	188	126	188
		SSLT	114	172	143	214	148	221
Group B	N	STD	116	174	145	217	174	260
	X	STD	116	174	145	217	174	260
	SC Class A	STD	111	166	111	166	111	166
		OVS	94.4	141	94.4	141	94.4	141
		SSLT	111	166	111	166	111	166
	SC Class B	STD	116	174	145	217	174	260
		OVS	115	172	144	215	157	235
		SSLT	114	172	143	214	172	257

Weld and Beam Web Available Strength, kips

70-ksi Weld Size, in.	Minimum Beam Web Thickness, in.	R_n/Ω kips ASD	ϕR_n kips LRFD
3/16	0.286	112	168
1/4	0.381	148	223
5/16	0.476	184	277
3/8	0.571	220	330

Support Available Strength per Inch Thickness, kip/in.

ASD	LRFD
819	1230

STD = Standard holes
OVS = Oversized holes
SSLT = Short-slotted holes transverse to direction of load

N = Threads included
X = Threads excluded
SC = Slip critical

End-Plate	Beam
F_y = 36 ksi F_u = 58 ksi	F_y = 50 ksi F_u = 65 ksi

Note: Slip-critical bolt values assume no more than one filler has been provided or bolts have been added to distribute loads in the fillers.

W44, 40, 36, 33, 30, 27, 24, 21

Table 10-4 (continued)
Bolted/Welded Shear End-Plate Connections

$^3/_4$-in. Bolts
6 Rows
$L = 17^1/_2$ in.

Bolt and End-Plate Available Strength, kips

Bolt Group	Thread Cond.	Hole Type	End-Plate Thickness, in.					
			$^1/_4$		$^5/_{16}$		$^3/_8$	
			ASD	LRFD	ASD	LRFD	ASD	LRFD
Group A	N	STD	99.5	149	124	187	143	215
	X	STD	99.5	149	124	187	149	224
	SC Class A	STD	75.9	114	75.9	114	75.9	114
		OVS	64.7	96.8	64.7	96.8	64.7	96.8
		SSLT	75.9	114	75.9	114	75.9	114
	SC Class B	STD	99.5	149	124	187	127	190
		OVS	98.6	148	108	161	108	161
		SSLT	98.2	147	123	184	127	190
Group B	N	STD	99.5	149	124	187	149	224
	X	STD	99.5	149	124	187	149	224
	SC Class A	STD	94.9	142	94.9	142	94.9	142
		OVS	80.9	121	80.9	121	80.9	121
		SSLT	94.9	142	94.9	142	94.9	142
	SC Class B	STD	99.5	149	124	187	149	224
		OVS	98.6	148	123	185	135	202
		SSLT	98.2	147	123	184	147	221

Weld and Beam Web Available Strength, kips				Support Available Strength per Inch Thickness, kip/in.	
70-ksi Weld Size, in.	Minimum Beam Web Thickness, in.	R_n/Ω kips	ϕR_n kips		
		ASD	LRFD	ASD	LRFD
$^3/_{16}$	0.286	95.4	143	702	1050
$^1/_4$	0.381	126	189		
$^5/_{16}$	0.476	157	235		
$^3/_8$	0.571	187	280		

STD = Standard holes
OVS = Oversized holes
SSLT = Short-slotted holes transverse to direction of load
N = Threads included
X = Threads excluded
SC = Slip critical

End-Plate	Beam
$F_y = 36$ ksi $F_u = 58$ ksi	$F_y = 50$ ksi $F_u = 65$ ksi

Note: Slip-critical bolt values assume no more than one filler has been provided or bolts have been added to distribute loads in the fillers.

3/4-in. Bolts
5 Rows
L **= 14 1/2 in.**

Table 10-4 (continued)
Bolted/Welded Shear End-Plate Connections

W30, 27, 24, 21, 18

Bolt and End-Plate Available Strength, kips

Bolt Group	Thread Cond.	Hole Type	End-Plate Thickness, in.					
			1/4		5/16		3/8	
			ASD	LRFD	ASD	LRFD	ASD	LRFD
Group A	N	STD	83.3	125	104	156	119	179
	X	STD	83.3	125	104	156	125	187
	SC Class A	STD	63.3	94.9	63.3	94.9	63.3	94.9
		OVS	53.9	80.7	53.9	80.7	53.9	80.7
		SSLT	63.3	94.9	63.3	94.9	63.3	94.9
	SC Class B	STD	83.3	125	104	156	105	158
		OVS	82.4	124	89.9	134	89.9	134
		SSLT	82.0	123	102	154	105	158
Group B	N	STD	83.3	125	104	156	125	187
	X	STD	83.3	125	104	156	125	187
	SC Class A	STD	79.1	119	79.1	119	79.1	119
		OVS	67.4	101	67.4	101	67.4	101
		SSLT	79.1	119	79.1	119	79.1	119
	SC Class B	STD	83.3	125	104	156	125	187
		OVS	82.4	124	103	155	112	168
		SSLT	82.0	123	102	154	123	184

Weld and Beam Web Available Strength, kips

70-ksi Weld Size, in.	Minimum Beam Web Thickness, in.	R_n/Ω kips ASD	ϕR_n kips LRFD	Support Available Strength per Inch Thickness, kip/in. ASD	LRFD
3/16	0.286	78.7	118	585	878
1/4	0.381	104	156		
5/16	0.476	129	193		
3/8	0.571	153	230		

STD = Standard holes
OVS = Oversized holes
SSLT = Short-slotted holes transverse to direction of load

N = Threads included
X = Threads excluded
SC = Slip critical

End-Plate	Beam
F_y = 36 ksi F_u = 58 ksi	F_y = 50 ksi F_u = 65 ksi

Note: Slip-critical bolt values assume no more than one filler has been provided or bolts have been added to distribute loads in the fillers.

W24, 21, 18, 16

Table 10-4 (continued) Bolted/Welded Shear End-Plate Connections

$^3/_4$-in. Bolts
4 Rows
$L = 11^1/_2$ in.

Bolt and End-Plate Available Strength, kips

Bolt Group	Thread Cond.	Hole Type	End-Plate Thickness, in.					
			1/4		5/16		3/8	
			ASD	LRFD	ASD	LRFD	ASD	LRFD
Group A	N	STD	67.1	101	83.9	126	95.5	143
	X	STD	67.1	101	83.9	126	101	151
	SC Class A	STD	50.6	75.9	50.6	75.9	50.6	75.9
		OVS	43.1	64.5	43.1	64.5	43.1	64.5
		SSLT	50.6	75.9	50.6	75.9	50.6	75.9
	SC Class B	STD	67.1	101	83.9	126	84.4	127
		OVS	65.3	97.9	71.9	108	71.9	108
		SSLT	65.8	98.7	82.2	123	84.4	127
Group B	N	STD	67.1	101	83.9	126	101	151
	X	STD	67.1	101	83.9	126	101	151
	SC Class A	STD	63.3	94.9	63.3	94.9	63.3	94.9
		OVS	53.9	80.7	53.9	80.7	53.9	80.7
		SSLT	63.3	94.9	63.3	94.9	63.3	94.9
	SC Class B	STD	67.1	101	83.9	126	101	151
		OVS	65.3	97.9	81.6	122	89.9	134
		SSLT	65.8	98.7	82.2	123	98.7	148

Weld and Beam Web Available Strength, kips

70-ksi Weld Size, in.	Minimum Beam Web Thickness, in.	R_n/Ω kips ASD	ϕR_n kips LRFD	Support Available Strength per Inch Thickness, kip/in. ASD	LRFD
3/16	0.286	61.9	92.9	468	702
1/4	0.381	81.7	123		
5/16	0.476	101	151		
3/8	0.571	120	180		

STD = Standard holes
OVS = Oversized holes
SSLT = Short-slotted holes transverse to direction of load
N = Threads included
X = Threads excluded
SC = Slip critical

End-Plate	Beam
$F_y = 36$ ksi $F_u = 58$ ksi	$F_y = 50$ ksi $F_u = 65$ ksi

Note: Slip-critical bolt values assume no more than one filler has been provided or bolts have been added to distribute loads in the fillers.

3/4-in. Bolts
3 Rows
L = 8 1/2 in.

Table 10-4 (continued)
Bolted/Welded Shear End-Plate Connections

W18, 16, 14, 12, 10*

Bolt and End-Plate Available Strength, kips

Bolt Group	Thread Cond.	Hole Type	End-Plate Thickness, in.					
			1/4		5/16		3/8	
			ASD	LRFD	ASD	LRFD	ASD	LRFD
Group A	N	STD	50.9	76.4	63.7	95.5	71.6	107
	X	STD	50.9	76.4	63.7	95.5	76.4	115
	SC Class A	STD	38.0	57.0	38.0	57.0	38.0	57.0
		OVS	32.4	48.4	32.4	48.4	32.4	48.4
		SSLT	38.0	57.0	38.0	57.0	38.0	57.0
	SC Class B	STD	50.9	76.4	63.3	94.9	63.3	94.9
		OVS	47.9	71.8	53.9	80.7	53.9	80.7
		SSLT	49.6	74.4	62.0	92.9	63.3	94.9
Group B	N	STD	50.9	76.4	63.7	95.5	76.4	115
	X	STD	50.9	76.4	63.7	95.5	76.4	115
	SC Class A	STD	47.5	71.2	47.5	71.2	47.5	71.2
		OVS	40.4	60.5	40.4	60.5	40.4	60.5
		SSLT	47.5	71.2	47.5	71.2	47.5	71.2
	SC Class B	STD	50.9	76.4	63.7	95.5	76.4	115
		OVS	47.9	71.8	59.8	89.7	67.4	101
		SSLT	49.6	74.4	62.0	92.9	74.4	112

Weld and Beam Web Available Strength, kips

70-ksi Weld Size, in.	Minimum Beam Web Thickness, in.	R_n/Ω kips ASD	ϕR_n kips LRFD	Support Available Strength per Inch Thickness, kip/in. ASD	LRFD
3/16	0.286	45.2	67.9	351	526
1/4	0.381	59.4	89.1		
5/16	0.476	73.1	110		
3/8	0.571	88.3	129		

STD = Standard holes
OVS = Oversized holes
SSLT = Short-slotted holes transverse to direction of load
N = Threads included
X = Threads excluded
SC = Slip critical

End-Plate	Beam
F_y = 36 ksi F_u = 58 ksi	F_y = 50 ksi F_u = 65 ksi

*Limited to W10×12, 15,17, 19, 22, 26, 30
Note: Slip-critical bolt values assume no more than one filler has been provided or bolts have been added to distribute loads in the fillers.

W12, 10, 8

Table 10-4 (continued)
Bolted/Welded Shear End-Plate Connections

$^3/_4$-in. Bolts
2 Rows
$L = 5^1/_2$ in.

Bolt and End-Plate Available Strength, kips

Bolt Group	Thread Cond.	Hole Type	End-Plate Thickness, in.					
			1/4		5/16		3/8	
			ASD	LRFD	ASD	LRFD	ASD	LRFD
Group A	N	STD	32.6	48.9	40.8	61.2	47.7	71.6
	X	STD	32.6	48.9	40.8	61.2	48.9	73.4
	SC Class A	STD	25.3	38.0	25.3	38.0	25.3	38.0
		OVS	21.6	32.3	21.6	32.3	21.6	32.3
		SSLT	25.3	38.0	25.3	38.0	25.3	38.0
	SC Class B	STD	32.6	48.9	40.8	61.2	42.2	63.3
		OVS	30.5	45.7	36.0	53.8	36.0	53.8
		SSLT	32.6	48.9	40.8	61.2	42.2	63.3
Group B	N	STD	32.6	48.9	40.8	61.2	48.9	73.4
	X	STD	32.6	48.9	40.8	61.2	48.9	73.4
	SC Class A	STD	31.6	47.5	31.6	47.5	31.6	47.5
		OVS	27.0	40.3	27.0	40.3	27.0	40.3
		SSLT	31.6	47.5	31.6	47.5	31.6	47.5
	SC Class B	STD	32.6	48.9	40.8	61.2	48.9	73.4
		OVS	30.5	45.7	38.1	57.1	44.9	67.2
		SSLT	32.6	48.9	40.8	61.2	48.9	73.4

Weld and Beam Web Available Strength, kips

70-ksi Weld Size, in.	Minimum Beam Web Thickness, in.	R_n/Ω kips ASD	ϕR_n kips LRFD
3/16	0.286	28.5	42.8
1/4	0.381	37.1	55.7
5/16	0.476	45.2	67.9
3/8	0.571	52.9	79.4

Support Available Strength per Inch Thickness, kip/in.

ASD	LRFD
234	351

STD = Standard holes
OVS = Oversized holes
SSLT = Short-slotted holes transverse to direction of load
N = Threads included
X = Threads excluded
SC = Slip critical

End-Plate	Beam
$F_y = 36$ ksi $F_u = 58$ ksi	$F_y = 50$ ksi $F_u = 65$ ksi

Note: Slip-critical bolt values assume no more than one filler has been provided or bolts have been added to distribute loads in the fillers.

7/8-in. Bolts
12 Rows
***L* = 35 1/2 in.**

Table 10-4 (continued)
Bolted/Welded Shear End-Plate Connections

W44

Bolt and End-Plate Available Strength, kips								
Bolt Group	Thread Cond.	Hole Type	End-Plate Thickness, in.					
			1/4		5/16		3/8	
			ASD	LRFD	ASD	LRFD	ASD	LRFD
Group A	N	STD	196	294	245	367	294	441
	X	STD	196	294	245	367	294	441
	SC Class A	STD	196	294	212	317	212	317
		OVS	180	270	180	270	180	270
		SSLT	194	292	212	317	212	317
	SC Class B	STD	196	294	245	367	294	441
		OVS	191	287	239	359	287	431
		SSLT	194	292	243	365	292	438
Group B	N	STD	196	294	245	367	294	441
	X	STD	196	294	245	367	294	441
	SC Class A	STD	196	294	245	367	266	399
		OVS	191	287	227	339	227	339
		SSLT	194	292	243	365	266	399
	SC Class B	STD	196	294	245	367	294	441
		OVS	191	287	239	359	287	431
		SSLT	194	292	243	365	292	438

Weld and Beam Web Available Strength, kips				Support Available Strength per Inch Thickness, kip/in.	
70-ksi Weld Size, in.	Minimum Beam Web Thickness, in.	R_n/Ω kips	ϕR_n kips		
		ASD	LRFD	ASD	LRFD
3/16	0.286	196	293	1640	2460
1/4	0.381	260	390		
5/16	0.476	324	486		
3/8	0.571	387	581		

STD = Standard holes	N = Threads included	End-Plate	Beam
OVS = Oversized holes	X = Threads excluded	F_y = 36 ksi	F_y = 50 ksi
SSLT = Short-slotted holes transverse to direction of load	SC = Slip critical	F_u = 58 ksi	F_u = 65 ksi

Note: Slip-critical bolt values assume no more than one filler has been provided or bolts have been added to distribute loads in the fillers.

W44, 40

Table 10-4 (continued)
Bolted/Welded Shear End-Plate Connections

7/8-in. Bolts
11 Rows
L = 32 1/2 in.

Bolt and End-Plate Available Strength, kips

Bolt Group	Thread Cond.	Hole Type	End-Plate Thickness, in. 1/4 ASD	1/4 LRFD	5/16 ASD	5/16 LRFD	3/8 ASD	3/8 LRFD
Group A	N	STD	180	269	225	337	269	404
	X	STD	180	269	225	337	269	404
	SC Class A	STD	180	269	194	291	194	291
		OVS	165	247	165	247	165	247
		SSLT	178	267	194	291	194	291
	SC Class B	STD	180	269	225	337	269	404
		OVS	175	263	219	328	263	394
		SSLT	178	267	223	334	267	401
Group B	N	STD	180	269	225	337	269	404
	X	STD	180	269	225	337	269	404
	SC Class A	STD	180	269	225	337	244	365
		OVS	175	263	208	311	208	311
		SSLT	178	267	223	334	244	365
	SC Class B	STD	180	269	225	337	269	404
		OVS	175	263	219	328	263	394
		SSLT	178	267	223	334	267	401

Weld and Beam Web Available Strength, kips

70-ksi Weld Size, in.	Minimum Beam Web Thickness, in.	R_n/Ω kips ASD	ϕR_n kips LRFD
3/16	0.286	179	268
1/4	0.381	238	356
5/16	0.476	296	444
3/8	0.571	354	530

Support Available Strength per Inch Thickness, kip/in.

ASD	LRFD
1500	2250

STD = Standard holes
OVS = Oversized holes
SSLT = Short-slotted holes transverse to direction of load
N = Threads included
X = Threads excluded
SC = Slip critical

End-Plate	Beam
F_y = 36 ksi F_u = 58 ksi	F_y = 50 ksi F_u = 65 ksi

Note: Slip-critical bolt values assume no more than one filler has been provided or bolts have been added to distribute loads in the fillers.

7/8-in. Bolts
10 Rows
L = 29½ in.

Table 10-4 (continued)
Bolted/Welded Shear End-Plate Connections

W44, 40, 36

Bolt and End-Plate Available Strength, kips

Bolt Group	Thread Cond.	Hole Type	End-Plate Thickness, in.					
			1/4		5/16		3/8	
			ASD	LRFD	ASD	LRFD	ASD	LRFD
Group A	N	STD	163	245	204	306	245	368
	X	STD	163	245	204	306	245	368
	SC Class A	STD	163	245	176	264	176	264
		OVS	150	225	150	225	150	225
		SSLT	162	243	176	264	176	264
	SC Class B	STD	163	245	204	306	245	368
		OVS	159	238	198	298	238	357
		SSLT	162	243	203	304	243	365
Group B	N	STD	163	245	204	306	245	368
	X	STD	163	245	204	306	245	368
	SC Class A	STD	163	245	204	306	221	332
		OVS	159	238	189	282	189	282
		SSLT	162	243	203	304	221	332
	SC Class B	STD	163	245	204	306	245	368
		OVS	159	238	198	298	238	357
		SSLT	162	243	203	304	243	365

Weld and Beam Web Available Strength, kips

70-ksi Weld Size, in.	Minimum Beam Web Thickness, in.	R_n/Ω kips	ϕR_n kips	Support Available Strength per Inch Thickness, kip/in.	
		ASD	LRFD	ASD	LRFD
3/16	0.286	162	243	1370	2050
1/4	0.381	215	323		
5/16	0.476	268	402		
3/8	0.571	320	480		

STD = Standard holes
OVS = Oversized holes
SSLT = Short-slotted holes transverse to direction of load

N = Threads included
X = Threads excluded
SC = Slip critical

End-Plate	Beam
F_y = 36 ksi F_u = 58 ksi	F_y = 50 ksi F_u = 65 ksi

Note: Slip-critical bolt values assume no more than one filler has been provided or bolts have been added to distribute loads in the fillers.

W44, 40, 36, 33

Table 10-4 (continued)
Bolted/Welded Shear End-Plate Connections

7/8-in. Bolts
9 Rows
L = 26 1/2 in.

Bolt and End-Plate Available Strength, kips

Bolt Group	Thread Cond.	Hole Type	End-Plate Thickness, in. 1/4 ASD	1/4 LRFD	5/16 ASD	5/16 LRFD	3/8 ASD	3/8 LRFD
Group A	N	STD	147	221	184	276	221	331
	X	STD	147	221	184	276	221	331
	SC Class A	STD	147	221	159	238	159	238
		OVS	135	202	135	202	135	202
		SSLT	146	219	159	238	159	238
	SC Class B	STD	147	221	184	276	221	331
		OVS	142	214	178	267	214	321
		SSLT	146	219	182	273	219	328
Group B	N	STD	147	221	184	276	221	331
	X	STD	147	221	184	276	221	331
	SC Class A	STD	147	221	184	276	199	299
		OVS	142	214	170	254	170	254
		SSLT	146	219	182	273	199	299
	SC Class B	STD	147	221	184	276	221	331
		OVS	142	214	178	267	214	321
		SSLT	146	219	182	273	219	328

Weld and Beam Web Available Strength, kips

70-ksi Weld Size, in.	Minimum Beam Web Thickness, in.	R_n/Ω kips ASD	ϕR_n kips LRFD
3/16	0.286	145	218
1/4	0.381	193	290
5/16	0.476	240	360
3/8	0.571	287	430

Support Available Strength per Inch Thickness, kip/in.

ASD	LRFD
1230	1840

STD = Standard holes
OVS = Oversized holes
SSLT = Short-slotted holes transverse to direction of load

N = Threads included
X = Threads excluded
SC = Slip critical

End-Plate	Beam
F_y = 36 ksi F_u = 58 ksi	F_y = 50 ksi F_u = 65 ksi

Note: Slip-critical bolt values assume no more than one filler has been provided or bolts have been added to distribute loads in the fillers.

7/8-in. Bolts
8 Rows
L = 23 1/2 in.

Table 10-4 (continued)
Bolted/Welded Shear End-Plate Connections

W44, 40, 36, 33, 30

Bolt and End-Plate Available Strength, kips

Bolt Group	Thread Cond.	Hole Type	End-Plate Thickness, in.					
			1/4		5/16		3/8	
			ASD	LRFD	ASD	LRFD	ASD	LRFD
Group A	N	STD	131	197	164	246	197	295
	X	STD	131	197	164	246	197	295
	SC Class A	STD	131	197	141	212	141	212
		OVS	120	180	120	180	120	180
		SSLT	130	194	141	212	141	212
	SC Class B	STD	131	197	164	246	197	295
		OVS	126	189	158	237	189	284
		SSLT	130	194	162	243	194	292
Group B	N	STD	131	197	164	246	197	295
	X	STD	131	197	164	246	197	295
	SC Class A	STD	131	197	164	246	177	266
		OVS	126	189	151	226	151	226
		SSLT	130	194	162	243	177	266
	SC Class B	STD	131	197	164	246	197	295
		OVS	126	189	158	237	189	284
		SSLT	130	194	162	243	194	292

Weld and Beam Web Available Strength, kips

70-ksi Weld Size, in.	Minimum Beam Web Thickness, in.	R_n/Ω kips ASD	ϕR_n kips LRFD
3/16	0.286	129	193
1/4	0.381	171	256
5/16	0.476	212	318
3/8	0.571	253	380

Support Available Strength per Inch Thickness, kip/in.

ASD	LRFD
1090	1640

STD = Standard holes
OVS = Oversized holes
SSLT = Short-slotted holes transverse to direction of load
N = Threads included
X = Threads excluded
SC = Slip critical

End-Plate	Beam
F_y = 36 ksi F_u = 58 ksi	F_y = 50 ksi F_u = 65 ksi

Note: Slip-critical bolt values assume no more than one filler has been provided or bolts have been added to distribute loads in the fillers.

W44, 40, 36, 33, 30, 27, 24

Table 10-4 (continued) Bolted/Welded Shear End-Plate Connections

7/8-in. Bolts
7 Rows
L = 20 1/2 in.

Bolt and End-Plate Available Strength, kips								
Bolt Group	Thread Cond.	Hole Type	End-Plate Thickness, in.					
			1/4		5/16		3/8	
			ASD	LRFD	ASD	LRFD	ASD	LRFD
Group A	N	STD	115	172	144	215	172	258
	X	STD	115	172	144	215	172	258
	SC Class A	STD	115	172	123	185	123	185
		OVS	105	157	105	157	105	157
		SSLT	113	170	123	185	123	185
	SC Class B	STD	115	172	144	215	172	258
		OVS	110	165	137	206	165	247
		SSLT	113	170	142	213	170	255
Group B	N	STD	115	172	144	215	172	258
	X	STD	115	172	144	215	172	258
	SC Class A	STD	115	172	144	215	155	233
		OVS	110	165	132	198	132	198
		SSLT	113	170	142	213	155	233
	SC Class B	STD	115	172	144	215	172	258
		OVS	110	165	137	206	165	247
		SSLT	113	170	142	213	170	255

Weld and Beam Web Available Strength, kips				Support Available Strength per Inch Thickness, kip/in.	
70-ksi Weld Size, in.	Minimum Beam Web Thickness, in.	R_n/Ω kips	ϕR_n kips		
		ASD	LRFD	ASD	LRFD
3/16	0.286	112	168	956	1430
1/4	0.381	148	223		
5/16	0.476	184	277		
3/8	0.571	220	330		

STD = Standard holes
OVS = Oversized holes
SSLT = Short-slotted holes transverse to direction of load

N = Threads included
X = Threads excluded
SC = Slip critical

End-Plate	Beam
F_y = 36 ksi F_u = 58 ksi	F_y = 50 ksi F_u = 65 ksi

Note: Slip-critical bolt values assume no more than one filler has been provided or bolts have been added to distribute loads in the fillers.

7/8-in. Bolts
6 Rows
L = 17 1/2 in.

Table 10-4 (continued)
Bolted/Welded Shear End-Plate Connections

W40, 36, 33, 30, 27, 24, 21

Bolt and End-Plate Available Strength, kips

Bolt Group	Thread Cond.	Hole Type	End-Plate Thickness, in. 1/4 ASD	1/4 LRFD	5/16 ASD	5/16 LRFD	3/8 ASD	3/8 LRFD
Group A	N	STD	98.6	148	123	185	148	222
	X	STD	98.6	148	123	185	148	222
	SC Class A	STD	98.6	148	106	159	106	159
		OVS	90.1	135	90.1	135	90.1	135
		SSLT	97.3	146	106	159	106	159
	SC Class B	STD	98.6	148	123	185	148	222
		OVS	93.5	140	117	175	140	210
		SSLT	97.3	146	122	182	146	219
Group B	N	STD	98.6	148	123	185	148	222
	X	STD	98.6	148	123	185	148	222
	SC Class A	STD	98.6	148	123	185	133	199
		OVS	93.5	140	113	169	113	169
		SSLT	97.3	146	122	182	133	199
	SC Class B	STD	98.6	148	123	185	148	222
		OVS	93.5	140	117	175	140	210
		SSLT	97.3	146	122	182	146	219

Weld and Beam Web Available Strength, kips

70-ksi Weld Size, in.	Minimum Beam Web Thickness, in.	R_n/Ω kips ASD	ϕR_n kips LRFD	Support Available Strength per Inch Thickness, kip/in. ASD	LRFD
3/16	0.286	95.4	143	819	1230
1/4	0.381	126	189		
5/16	0.476	157	235		
3/8	0.571	187	280		

STD = Standard holes
OVS = Oversized holes
SSLT = Short-slotted holes transverse to direction of load

N = Threads included
X = Threads excluded
SC = Slip critical

End-Plate	Beam
F_y = 36 ksi F_u = 58 ksi	F_y = 50 ksi F_u = 65 ksi

Note: Slip-critical bolt values assume no more than one filler has been provided or bolts have been added to distribute loads in the fillers.

W30, 27, 24, 21, 18

Table 10-4 (continued)
Bolted/Welded Shear End-Plate Connections

7/8-in. Bolts
5 Rows
L = 14 1/2 in.

Bolt and End-Plate Available Strength, kips

Bolt Group	Thread Cond.	Hole Type	End-Plate Thickness, in. 1/4 ASD	1/4 LRFD	5/16 ASD	5/16 LRFD	3/8 ASD	3/8 LRFD
Group A	N	STD	82.4	124	103	155	124	185
	X	STD	82.4	124	103	155	124	185
	SC Class A	STD	82.4	124	88.1	132	88.1	132
		OVS	75.1	112	75.1	112	75.1	112
		SSLT	81.1	122	88.1	132	88.1	132
	SC Class B	STD	82.4	124	103	155	124	185
		OVS	77.2	116	96.5	145	116	174
		SSLT	81.1	122	101	152	122	182
Group B	N	STD	82.4	124	103	155	124	185
	X	STD	82.4	124	103	155	124	185
	SC Class A	STD	82.4	124	103	155	111	166
		OVS	77.2	116	94.4	141	94.4	141
		SSLT	81.1	122	101	152	111	166
	SC Class B	STD	82.4	124	103	155	124	185
		OVS	77.2	116	96.5	145	116	174
		SSLT	81.1	122	101	152	122	182

Weld and Beam Web Available Strength, kips

70-ksi Weld Size, in.	Minimum Beam Web Thickness, in.	R_n/Ω kips ASD	ϕR_n kips LRFD
3/16	0.286	78.7	118
1/4	0.381	104	156
5/16	0.476	193	193
3/8	0.571	153	230

Support Available Strength per Inch Thickness, kip/in.

ASD	LRFD
683	1020

STD = Standard holes
OVS = Oversized holes
SSLT = Short-slotted holes transverse to direction of load

N = Threads included
X = Threads excluded
SC = Slip critical

End-Plate	Beam
F_y = 36 ksi F_u = 58 ksi	F_y = 50 ksi F_u = 65 ksi

Note: Slip-critical bolt values assume no more than one filler has been provided or bolts have been added to distribute loads in the fillers.

7/8-in. Bolts
4 Rows
L = 11½ in.

Table 10-4 (continued)
Bolted/Welded Shear End-Plate Connections

W24, 21, 18, 16

Bolt and End-Plate Available Strength, kips

Bolt Group	Thread Cond.	Hole Type	End-Plate Thickness, in.					
			1/4		5/16		3/8	
			ASD	LRFD	ASD	LRFD	ASD	LRFD
Group A	N	STD	65.3	97.9	81.6	122	97.9	147
	X	STD	65.3	97.9	81.6	122	97.9	147
	SC Class A	STD	65.3	97.9	70.5	106	70.5	106
		OVS	60.1	89.9	60.1	89.9	60.1	89.9
		SSLT	64.9	97.3	70.5	106	70.5	106
	SC Class B	STD	65.3	97.9	81.6	122	97.9	147
		OVS	60.9	91.4	76.1	114	91.4	137
		SSLT	64.9	97.3	81.1	122	97.3	146
Group B	N	STD	65.3	97.9	81.6	122	97.9	147
	X	STD	65.3	97.9	81.6	122	97.9	147
	SC Class A	STD	65.3	97.9	81.6	122	88.6	133
		OVS	60.9	91.4	75.5	113	75.5	113
		SSLT	64.9	97.3	81.1	122	88.6	133
	SC Class B	STD	65.3	97.9	81.6	122	97.9	147
		OVS	60.9	91.4	76.1	114	91.4	137
		SSLT	64.9	97.3	81.1	122	97.3	146

Weld and Beam Web Available Strength, kips

70-ksi Weld Size, in.	Minimum Beam Web Thickness, in.	R_n/Ω kips ASD	ϕR_n kips LRFD
3/16	0.286	61.9	92.9
1/4	0.381	81.7	123
5/16	0.476	101	151
3/8	0.571	120	180

Support Available Strength per Inch Thickness, kip/in.

ASD	LRFD
546	819

STD = Standard holes
OVS = Oversized holes
SSLT = Short-slotted holes transverse to direction of load

N = Threads included
X = Threads excluded
SC = Slip critical

End-Plate	Beam
F_y = 36 ksi F_u = 58 ksi	F_y = 50 ksi F_u = 65 ksi

Note: Slip-critical bolt values assume no more than one filler has been provided or bolts have been added to distribute loads in the fillers.

W18, 16, 14, 12, 10*

Table 10-4 (continued) Bolted/Welded Shear End-Plate Connections

7/8-in. Bolts
3 Rows
$L = 8\frac{1}{2}$ in.

Bolt Group	Thread Cond.	Hole Type	End-Plate Thickness, in. 1/4 ASD	1/4 LRFD	5/16 ASD	5/16 LRFD	3/8 ASD	3/8 LRFD
Group A	N	STD	47.9	71.8	59.8	89.7	71.8	108
	X	STD	47.9	71.8	59.8	89.7	71.8	108
	SC Class A	STD	47.9	71.8	52.9	79.3	52.9	79.3
		OVS	44.6	66.9	45.1	67.4	45.1	67.4
		SSLT	47.9	71.8	52.9	79.3	52.9	79.3
	SC Class B	STD	47.9	71.8	59.8	89.7	71.8	108
		OVS	44.6	66.9	55.7	83.6	66.9	100
		SSLT	47.9	71.8	59.8	89.7	71.8	108
Group B	N	STD	47.9	71.8	59.8	89.7	71.8	108
	X	STD	47.9	71.8	59.8	89.7	71.8	108
	SC Class A	STD	47.9	71.8	59.8	89.7	66.4	99.7
		OVS	44.6	66.9	55.7	83.6	56.6	84.7
		SSLT	47.9	71.8	59.8	89.7	66.4	99.7
	SC Class B	STD	47.9	71.8	59.8	89.7	71.8	108
		OVS	44.6	66.9	55.7	83.6	66.9	100
		SSLT	47.9	71.8	59.8	89.7	71.8	108

Bolt and End-Plate Available Strength, kips

70-ksi Weld Size, in.	Minimum Beam Web Thickness, in.	R_n/Ω kips ASD	ϕR_n kips LRFD	Support Available Strength per Inch Thickness, kip/in. ASD	LRFD
3/16	0.286	45.2	67.9	409	614
1/4	0.381	59.4	89.1		
5/16	0.476	73.1	110		
3/8	0.571	86.3	129		

Weld and Beam Web Available Strength, kips

STD = Standard holes
OVS = Oversized holes
SSLT = Short-slotted holes transverse to direction of load
N = Threads included
X = Threads excluded
SC = Slip critical

End-Plate	Beam
F_y = 36 ksi F_u = 58 ksi	F_y = 50 ksi F_u = 65 ksi

*Limited to W10×12, 15, 17, 19, 22, 26, 30

Note: Slip-critical bolt values assume no more than one filler has been provided or bolts have been added to distribute loads in the fillers.

7/8-in. Bolts
2 Rows
L = 5 1/2 in.

Table 10-4 (continued)
Bolted/Welded Shear End-Plate Connections

W12, 10, 8

Bolt and End-Plate Available Strength, kips

Bolt Group	Thread Cond.	Hole Type	End-Plate Thickness, in. 1/4 ASD	1/4 LRFD	5/16 ASD	5/16 LRFD	3/8 ASD	3/8 LRFD
Group A	N	STD	30.5	45.7	38.1	57.1	45.7	68.5
	X	STD	30.5	45.7	38.1	57.1	45.7	68.5
	SC Class A	STD	30.5	45.7	35.3	52.9	35.3	52.9
		OVS	28.3	42.4	30.0	45.0	30.0	45.0
		SSLT	30.5	45.7	35.3	52.9	35.3	52.9
	SC Class B	STD	30.5	45.7	38.1	57.1	45.7	68.5
		OVS	28.3	42.4	35.3	53.0	42.4	63.6
		SSLT	30.5	45.7	38.1	57.1	45.7	68.5
Group B	N	STD	30.5	45.7	38.1	57.1	45.7	68.5
	X	STD	30.5	45.7	38.1	57.1	45.7	68.5
	SC Class A	STD	30.5	45.7	38.1	57.1	44.3	66.4
		OVS	28.3	42.4	35.3	53.0	37.8	56.5
		SSLT	30.5	45.7	38.1	57.1	44.3	66.4
	SC Class B	STD	30.5	45.7	38.1	57.1	45.7	68.5
		OVS	28.3	42.4	35.3	53.0	42.4	63.6
		SSLT	30.5	45.7	38.1	57.1	45.7	68.5

Weld and Beam Web Available Strength, kips

70-ksi Weld Size, in.	Minimum Beam Web Thickness, in.	R_n/Ω kips ASD	ϕR_n kips LRFD
3/16	0.286	28.5	42.8
1/4	0.381	37.1	55.7
5/16	0.476	45.2	67.9
3/8	0.571	52.9	79.4

Support Available Strength per Inch Thickness, kip/in.

ASD	LRFD
273	409

STD = Standard holes
OVS = Oversized holes
SSLT = Short-slotted holes transverse to direction of load

N = Threads included
X = Threads excluded
SC = Slip critical

End-Plate	Beam
F_y = 36 ksi F_u = 58 ksi	F_y = 50 ksi F_u = 65 ksi

Note: Slip-critical bolt values assume no more than one filler has been provided or bolts have been added to distribute loads in the fillers.

W44

Table 10-4 (continued)
Bolted/Welded Shear End-Plate Connections

1-in. Bolts
12 Rows
$L = 35\frac{1}{2}$ in.

Bolt and End-Plate Available Strength, kips

Bolt Group	Thread Cond.	Hole Type	End-Plate Thickness, in.					
			1/4		5/16		3/8	
			ASD	LRFD	ASD	LRFD	ASD	LRFD
Group A	N	STD	191	287	239	359	287	431
	X	STD	191	287	239	359	287	431
	SC Class A	STD	191	287	239	359	277	415
		OVS	172	258	215	322	236	353
		SSLT	191	287	239	359	277	415
	SC Class B	STD	191	287	239	359	287	431
		OVS	172	258	215	322	258	387
		SSLT	191	287	239	359	287	431
Group B	N	STD	191	287	239	359	287	431
	X	STD	191	287	239	359	287	431
	SC Class A	STD	191	287	239	359	287	431
		OVS	172	258	215	322	258	387
		SSLT	191	287	239	359	287	431
	SC Class B	STD	191	287	239	359	287	431
		OVS	172	258	215	322	258	387
		SSLT	191	287	239	359	287	431

Weld and Beam Web Available Strength, kips

70-ksi Weld Size, in.	Minimum Beam Web Thickness, in.	R_n/Ω kips	ϕR_n kips
		ASD	LRFD
3/16	0.286	196	293
1/4	0.381	260	390
5/16	0.476	324	486
3/8	0.571	387	581

Support Available Strength per Inch Thickness, kip/in.

ASD	LRFD
1820 STD/SSLT	2730 STD/SSLT
1660 OVS	2490 OVS

End-Plate	Beam
$F_y = 36$ ksi $F_u = 58$ ksi	$F_y = 50$ ksi $F_u = 65$ ksi

STD = Standard holes
OVS = Oversized holes
SSLT = Short-slotted holes transverse to direction of load
N = Threads included
X = Threads excluded
SC = Slip critical

Note: Slip-critical bolt values assume no more than one filler has been provided or bolts have been added to distribute loads in the fillers.

1-in. Bolts
11 Rows
$L = 32\frac{1}{2}$ in.

Table 10-4 (continued)
Bolted/Welded Shear End-Plate Connections

W44, 40

Bolt Group	Thread Cond.	Hole Type	End-Plate Thickness, in.					
			1/4		5/16		3/8	
			ASD	LRFD	ASD	LRFD	ASD	LRFD
Group A	N	STD	175	263	219	328	263	394
	X	STD	175	263	219	328	263	394
	SC Class A	STD	175	263	219	328	254	380
		OVS	157	236	196	295	216	323
		SSLT	175	263	219	328	254	380
	SC Class B	STD	175	263	219	328	263	394
		OVS	157	236	196	295	236	354
		SSLT	175	263	219	328	263	394
Group B	N	STD	175	263	219	328	263	394
	X	STD	175	263	219	328	263	394
	SC Class A	STD	175	263	219	328	263	394
		OVS	157	236	196	295	236	354
		SSLT	175	263	219	328	263	394
	SC Class B	STD	175	263	219	328	263	394
		OVS	157	236	196	295	236	354
		SSLT	175	263	219	328	263	394

Bolt and End-Plate Available Strength, kips

Weld and Beam Web Available Strength, kips

70-ksi Weld Size, in.	Minimum Beam Web Thickness, in.	R_n/Ω kips ASD	ϕR_n kips LRFD
3/16	0.286	179	268
1/4	0.381	238	356
5/16	0.476	296	444
3/8	0.571	354	530

Support Available Strength per Inch Thickness, kip/in.

ASD	LRFD
1670 STD/SSLT	2500 STD/SSLT
1520 OVS	2280 OVS

End-Plate	Beam
$F_y = 36$ ksi $F_u = 58$ ksi	$F_y = 50$ ksi $F_u = 65$ ksi

STD = Standard holes
OVS = Oversized holes
SSLT = Short-slotted holes *transverse* to direction of load

N = Threads included
X = Threads excluded
SC = Slip critical

Note: Slip-critical bolt values assume no more than one filler has been provided or bolts have been added to distribute loads in the fillers.

W44, 40, 36

Table 10-4 (continued)
Bolted/Welded Shear End-Plate Connections

1-in. Bolts
10 Rows
L = 29½ in.

Bolt and End-Plate Available Strength, kips

Bolt Group	Thread Cond.	Hole Type	End-Plate Thickness, in.					
			¼		5/16		⅜	
			ASD	LRFD	ASD	LRFD	ASD	LRFD
Group A	N	STD	159	238	198	298	238	357
	X	STD	159	238	198	298	238	357
	SC Class A	STD	159	238	198	298	231	346
		OVS	142	214	178	267	196	294
		SSLT	159	238	198	298	231	346
	SC Class B	STD	159	238	198	298	238	357
		OVS	142	214	178	267	214	321
		SSLT	159	238	198	298	238	357
Group B	N	STD	159	238	198	298	238	357
	X	STD	159	238	198	298	238	357
	SC Class A	STD	159	238	198	298	238	357
		OVS	142	214	178	267	214	321
		SSLT	159	238	198	298	238	357
	SC Class B	STD	159	238	198	298	238	357
		OVS	142	214	178	267	214	321
		SSLT	159	238	198	298	238	357

Weld and Beam Web Available Strength, kips

70-ksi Weld Size, in.	Minimum Beam Web Thickness, in.	R_n/Ω kips ASD	ϕR_n kips LRFD
3/16	0.286	162	243
¼	0.381	215	323
5/16	0.476	268	402
⅜	0.571	320	480

Support Available Strength per Inch Thickness, kip/in.

ASD	LRFD
1520 STD/SSLT	2270 STD/SSLT
1380 OVS	2080 OVS

STD = Standard holes
OVS = Oversized holes
SSLT = Short-slotted holes transverse to direction of load
N = Threads included
X = Threads excluded
SC = Slip critical

End-Plate	Beam
F_y = 36 ksi F_u = 58 ksi	F_y = 50 ksi F_u = 65 ksi

Note: Slip-critical bolt values assume no more than one filler has been provided or bolts have been added to distribute loads in the fillers.

1-in. Bolts
9 Rows
$L = 26\frac{1}{2}$ in.

Table 10-4 (continued)
Bolted/Welded Shear End-Plate Connections

W44, 40, 36, 33

Bolt and End-Plate Available Strength, kips

Bolt Group	Thread Cond.	Hole Type	End-Plate Thickness, in.					
			1/4		5/16		3/8	
			ASD	LRFD	ASD	LRFD	ASD	LRFD
Group A	N	STD	142	214	178	267	214	321
	X	STD	142	214	178	267	214	321
	SC Class A	STD	142	214	178	267	207	311
		OVS	128	192	160	240	177	265
		SSLT	142	214	178	267	207	311
	SC Class B	STD	142	214	178	267	214	321
		OVS	128	192	160	240	192	288
		SSLT	142	214	178	267	214	321
Group B	N	STD	142	214	178	267	214	321
	X	STD	142	214	178	267	214	321
	SC Class A	STD	142	214	178	267	214	321
		OVS	128	192	160	240	192	288
		SSLT	142	214	178	267	214	321
	SC Class B	STD	142	214	178	267	214	321
		OVS	128	192	160	240	192	288
		SSLT	142	214	178	267	214	321

Weld and Beam Web Available Strength, kips

70-ksi Weld Size, in.	Minimum Beam Web Thickness, in.	R_n/Ω kips ASD	ϕR_n kips LRFD
3/16	0.286	145	218
1/4	0.381	193	290
5/16	0.476	240	360
3/8	0.571	287	430

Support Available Strength per Inch Thickness, kip/in.

ASD	LRFD
1370 STD/SSLT	2050 STD/SSLT
1250 OVS	1870 OVS

End-Plate	Beam
$F_y = 36$ ksi $F_u = 58$ ksi	$F_y = 50$ ksi $F_u = 65$ ksi

STD = Standard holes
OVS = Oversized holes
SSLT = Short-slotted holes transverse to direction of load
N = Threads included
X = Threads excluded
SC = Slip critical

Note: Slip-critical bolt values assume no more than one filler has been provided or bolts have been added to distribute loads in the fillers.

W44, 40, 36, 33, 30

Table 10-4 (continued)
Bolted/Welded Shear End-Plate Connections

1-in. Bolts
8 Rows
L = 23 1/2 in.

Bolt and End-Plate Available Strength, kips

Bolt Group	Thread Cond.	Hole Type	End-Plate Thickness, in. 1/4 ASD	1/4 LRFD	5/16 ASD	5/16 LRFD	3/8 ASD	3/8 LRFD
Group A	N	STD	126	189	158	237	189	284
	X	STD	126	189	158	237	189	284
	SC Class A	STD	126	189	158	237	184	277
		OVS	113	170	141	212	157	235
		SSLT	126	189	158	237	184	277
	SC Class B	STD	126	189	158	237	189	284
		OVS	113	170	141	212	170	254
		SSLT	126	189	158	237	189	284
Group B	N	STD	126	189	158	237	189	284
	X	STD	126	189	158	237	189	284
	SC Class A	STD	126	189	158	237	189	284
		OVS	113	170	141	212	170	254
		SSLT	126	189	158	237	189	284
	SC Class B	STD	126	189	158	237	189	284
		OVS	113	170	141	212	170	254
		SSLT	126	189	158	237	189	284

Weld and Beam Web Available Strength, kips

70-ksi Weld Size, in.	Minimum Beam Web Thickness, in.	R_n/Ω kips ASD	ϕR_n kips LRFD
3/16	0.286	129	193
1/4	0.381	171	256
5/16	0.476	212	318
3/8	0.571	253	380

Support Available Strength per Inch Thickness, kip/in.

ASD	LRFD
1210 STD/SSLT	1820 STD/SSLT
1110 OVS	1670 OVS

End-Plate	Beam
F_y = 36 ksi F_u = 58 ksi	F_y = 50 ksi F_u = 65 ksi

STD = Standard holes
OVS = Oversized holes
SSLT = Short-slotted holes transverse to direction of load
N = Threads included
X = Threads excluded
SC = Slip critical

Note: Slip-critical bolt values assume no more than one filler has been provided or bolts have been added to distribute loads in the fillers.

1-in. Bolts
7 Rows
L = 20 1/2 in.

Table 10-4 (continued)
Bolted/Welded Shear End-Plate Connections

W44, 40, 36, 33, 30, 27, 24

Bolt and End-Plate Available Strength, kips

Bolt Group	Thread Cond.	Hole Type	End-Plate Thickness, in. 1/4 ASD	1/4 LRFD	5/16 ASD	5/16 LRFD	3/8 ASD	3/8 LRFD
Group A	N	STD	110	165	137	206	165	247
	X	STD	110	165	137	206	165	247
	SC Class A	STD	110	165	137	206	161	242
		OVS	98.4	148	123	185	138	206
		SSLT	110	165	137	206	161	242
	SC Class B	STD	110	165	137	206	165	247
		OVS	98.4	148	123	185	148	221
		SSLT	110	165	137	206	165	247
Group B	N	STD	110	165	137	206	165	247
	X	STD	110	165	137	206	165	247
	SC Class A	STD	110	165	137	206	165	247
		OVS	98.4	148	123	185	148	221
		SSLT	110	165	137	206	165	247
	SC Class B	STD	110	165	137	206	165	247
		OVS	98.4	148	123	185	148	221
		SSLT	110	165	137	206	165	247

Weld and Beam Web Available Strength, kips

70-ksi Weld Size, in.	Minimum Beam Web Thickness, in.	R_n/Ω kips ASD	ϕR_n kips LRFD
3/16	0.286	112	168
1/4	0.381	148	223
5/16	0.476	184	277
3/8	0.571	220	330

Support Available Strength per Inch Thickness, kip/in.

ASD	LRFD
1060 STD/SSLT	1590 STD/SSLT
975 OVS	1460 OVS

End-Plate	Beam
F_y = 36 ksi F_u = 58 ksi	F_y = 50 ksi F_u = 65 ksi

STD = Standard holes
OVS = Oversized holes
SSLT = Short-slotted holes transverse to direction of load
N = Threads included
X = Threads excluded
SC = Slip critical

Note: Slip-critical bolt values assume no more than one filler has been provided or bolts have been added to distribute loads in the fillers.

W40, 36, 33, 30, 27, 24, 21

Table 10-4 (continued)
Bolted/Welded Shear End-Plate Connections

1-in. Bolts
6 Rows
$L = 17\frac{1}{2}$ in.

Bolt and End-Plate Available Strength, kips

Bolt Group	Thread Cond.	Hole Type	End-Plate Thickness, in.					
			1/4		5/16		3/8	
			ASD	LRFD	ASD	LRFD	ASD	LRFD
Group A	N	STD	93.5	140	117	175	140	210
	X	STD	93.5	140	117	175	140	210
	SC Class A	STD	93.5	140	117	175	138	207
		OVS	83.7	126	105	157	118	176
		SSLT	93.5	140	117	175	138	207
	SC Class B	STD	93.5	140	117	175	140	210
		OVS	83.7	126	105	157	126	188
		SSLT	93.5	140	117	175	140	210
Group B	N	STD	93.5	140	117	175	140	210
	X	STD	93.5	140	117	175	140	210
	SC Class A	STD	93.5	140	117	175	140	210
		OVS	83.7	126	105	157	126	188
		SSLT	93.5	140	117	175	140	210
	SC Class B	STD	93.5	140	117	175	140	210
		OVS	83.7	126	105	157	126	188
		SSLT	93.5	140	117	175	140	210

Weld and Beam Web Available Strength, kips

70-ksi Weld Size, in.	Minimum Beam Web Thickness, in.	R_n/Ω kips	ϕR_n kips
		ASD	LRFD
3/16	0.286	95.4	143
1/4	0.381	126	189
5/16	0.476	157	235
3/8	0.571	187	280

Support Available Strength per Inch Thickness, kip/in.

ASD	LRFD
912 STD/SSLT	1370 STD/SSLT
839 OVS	1260 OVS

STD = Standard holes
OVS = Oversized holes
SSLT = Short-slotted holes transverse to direction of load

N = Threads included
X = Threads excluded
SC = Slip critical

End-Plate	Beam
$F_y = 36$ ksi $F_u = 58$ ksi	$F_y = 50$ ksi $F_u = 65$ ksi

Note: Slip-critical bolt values assume no more than one filler has been provided or bolts have been added to distribute loads in the fillers.

1-in. Bolts
5 Rows
L = 14 1/2 in.

Table 10-4 (continued)
Bolted/Welded Shear End-Plate Connections

W30, 27, 24, 21, 18

Bolt and End-Plate Available Strength, kips

Bolt Group	Thread Cond.	Hole Type	End-Plate Thickness, in. 1/4 ASD	1/4 LRFD	5/16 ASD	5/16 LRFD	3/8 ASD	3/8 LRFD
Group A	N	STD	77.2	116	96.5	145	116	174
	X	STD	77.2	116	96.5	145	116	174
	SC Class A	STD	77.2	116	96.5	145	115	173
		OVS	69.1	104	86.3	129	98.2	147
		SSLT	77.2	116	96.5	145	115	173
	SC Class B	STD	77.2	116	96.5	145	116	174
		OVS	69.1	104	86.3	129	104	155
		SSLT	77.2	116	96.5	145	116	174
Group B	N	STD	77.2	116	96.5	145	116	174
	X	STD	77.2	116	96.5	145	116	174
	SC Class A	STD	77.2	116	96.5	145	116	174
		OVS	69.1	104	86.3	129	104	155
		SSLT	77.2	116	96.5	145	116	174
	SC Class B	STD	77.2	116	96.5	145	116	174
		OVS	69.1	104	86.3	129	104	155
		SSLT	77.2	116	96.5	145	116	174

Weld and Beam Web Available Strength, kips

70-ksi Weld Size, in.	Minimum Beam Web Thickness, in.	R_n/Ω kips ASD	ϕR_n kips LRFD
3/16	0.286	78.7	118
1/4	0.381	104	156
5/16	0.476	129	193
3/8	0.571	153	230

Support Available Strength per Inch Thickness, kip/in.

ASD	LRFD
761 STD/SSLT	1140 STD/SSLT
702 OVS	1050 OVS

STD = Standard holes
OVS = Oversized holes
SSLT = Short-slotted holes transverse to direction of load

N = Threads included
X = Threads excluded
SC = Slip critical

End-Plate	Beam
F_y = 36 ksi F_u = 58 ksi	F_y = 50 ksi F_u = 65 ksi

Note: Slip-critical bolt values assume no more than one filler has been provided or bolts have been added to distribute loads in the fillers.

W24, 21, 18, 16

Table 10-4 (continued)
Bolted/Welded Shear End-Plate Connections

1-in. Bolts
4 Rows
$L = 11^1/_2$ in.

Bolt and End-Plate Available Strength, kips

Bolt Group	Thread Cond.	Hole Type	End-Plate Thickness, in.					
			1/4		5/16		3/8	
			ASD	LRFD	ASD	LRFD	ASD	LRFD
Group A	N	STD	60.9	91.4	76.1	114	91.4	137
	X	STD	60.9	91.4	76.1	114	91.4	137
	SC Class A	STD	60.9	91.4	76.1	114	91.4	137
		OVS	54.4	81.6	68.0	102	78.6	118
		SSLT	60.9	91.4	76.1	114	91.4	137
	SC Class B	STD	60.9	91.4	76.1	114	91.4	137
		OVS	54.4	81.6	68.0	102	81.6	122
		SSLT	60.9	91.4	76.1	114	91.4	137
Group B	N	STD	60.9	91.4	76.1	114	91.4	137
	X	STD	60.9	91.4	76.1	114	91.4	137
	SC Class A	STD	60.9	91.4	76.1	114	91.4	137
		OVS	54.4	81.6	68.0	102	81.6	122
		SSLT	60.9	91.4	76.1	114	91.4	137
	SC Class B	STD	60.9	91.4	76.1	114	91.4	137
		OVS	54.4	81.6	68.0	102	81.6	122
		SSLT	60.9	91.4	76.1	114	91.4	137

Weld and Beam Web Available Strength, kips

70-ksi Weld Size, in.	Minimum Beam Web Thickness, in.	R_n/Ω kips ASD	ϕR_n kips LRFD	Support Available Strength per Inch Thickness, kip/in. ASD	LRFD
3/16	0.286	61.9	92.9	609 STD/SSLT	914 STD/SSLT
1/4	0.381	81.7	123		
5/16	0.476	101	151	566 OVS	848 OVS
3/8	0.571	120	180		

STD = Standard holes
OVS = Oversized holes
SSLT = Short-slotted holes transverse to direction of load
N = Threads included
X = Threads excluded
SC = Slip critical

End-Plate	Beam
$F_y = 36$ ksi $F_u = 58$ ksi	$F_y = 50$ ksi $F_u = 65$ ksi

Note: Slip-critical bolt values assume no more than one filler has been provided or bolts have been added to distribute loads in the fillers.

1-in. Bolts
3 Rows
$L = 8\frac{1}{2}$ in.

Table 10-4 (continued)
Bolted/Welded Shear End-Plate Connections

W18, 16, 14, 12, 10*

Bolt and End-Plate Available Strength, kips

Bolt Group	Thread Cond.	Hole Type	End-Plate Thickness, in.					
			1/4		5/16		3/8	
			ASD	LRFD	ASD	LRFD	ASD	LRFD
Group A	N	STD	44.6	66.9	55.7	83.6	66.9	100
	X	STD	44.6	66.9	55.7	83.6	66.9	100
	SC Class A	STD	44.6	66.9	55.7	83.6	66.9	100
		OVS	39.7	59.5	49.6	74.4	58.9	88.2
		SSLT	44.6	66.9	55.7	83.6	66.9	100
	SC Class B	STD	44.6	66.9	55.7	83.6	66.9	100
		OVS	39.7	59.5	49.6	74.4	59.5	89.3
		SSLT	44.6	66.9	55.7	83.6	66.9	100
Group B	N	STD	44.6	66.9	55.7	83.6	66.9	100
	X	STD	44.6	66.9	55.7	83.6	66.9	100
	SC Class A	STD	44.6	66.9	55.7	83.6	66.9	100
		OVS	39.7	59.5	49.6	74.4	59.5	89.3
		SSLT	44.6	66.9	55.7	83.6	66.9	100
	SC Class B	STD	44.6	66.9	55.7	83.6	66.9	100
		OVS	39.7	59.5	49.6	74.4	59.5	89.3
		SSLT	44.6	66.9	55.7	83.6	66.9	100

Weld and Beam Web Available Strength, kips

70-ksi Weld Size, in.	Minimum Beam Web Thickness, in.	R_n/Ω kips ASD	ϕR_n kips LRFD
3/16	0.286	45.2	67.9
1/4	0.381	59.4	89.1
5/16	0.476	73.1	110
3/8	0.571	86.3	129

Support Available Strength per Inch Thickness, kip/in.

ASD	LRFD
458 STD/SSLT	687 STD/SSLT
429 OVS	644 OVS

STD = Standard holes
OVS = Oversized holes
SSLT = Short-slotted holes transverse to direction of load
N = Threads included
X = Threads excluded
SC = Slip critical

End-Plate	Beam
$F_y = 36$ ksi $F_u = 58$ ksi	$F_y = 50$ ksi $F_u = 65$ ksi

*Limited to W10×12, 15, 17, 19, 22, 26, 30
Note: Slip-critical bolt values assume no more than one filler has been provided or bolts have been added to distribute loads in the fillers.

W12, 10, 8

Table 10-4 (continued)
Bolted/Welded Shear End-Plate Connections

1-in. Bolts
2 Rows
$L = 5^1/_2$ in.

Bolt and End-Plate Available Strength, kips

Bolt Group	Thread Cond.	Hole Type	End-Plate Thickness, in.					
			1/4		5/16		3/8	
			ASD	LRFD	ASD	LRFD	ASD	LRFD
Group A	N	STD	28.3	42.4	35.3	53.0	42.4	63.6
	X	STD	28.3	42.4	35.3	53.0	42.4	63.6
	SC Class A	STD	28.3	42.4	35.3	53.0	42.4	63.6
		OVS	25.0	37.5	31.3	46.9	37.5	56.3
		SSLT	28.3	42.4	35.3	53.0	42.4	63.6
	SC Class B	STD	28.3	42.4	35.3	53.0	42.4	63.6
		OVS	25.0	37.5	31.3	46.9	37.5	56.3
		SSLT	28.3	42.4	35.3	53.0	42.4	63.6
Group B	N	STD	28.3	42.4	35.3	53.0	42.4	63.6
	X	STD	28.3	42.4	35.3	53.0	42.4	63.6
	SC Class A	STD	28.3	42.4	35.3	53.0	42.4	63.6
		OVS	25.0	37.5	31.3	46.9	37.5	56.3
		SSLT	28.3	42.4	35.3	53.0	42.4	63.6
	SC Class B	STD	28.3	42.4	35.3	53.0	42.4	63.6
		OVS	25.0	37.5	31.3	46.9	37.5	56.3
		SSLT	28.3	42.4	35.3	53.0	42.4	63.6

Weld and Beam Web Available Strength, kips

70-ksi Weld Size, in.	Minimum Beam Web Thickness, in.	R_n/Ω kips ASD	ϕR_n kips LRFD
3/16	0.286	28.5	42.8
1/4	0.381	37.1	55.7
5/16	0.476	45.2	67.9
3/8	0.571	52.9	79.4

Support Available Strength per Inch Thickness, kip/in.

ASD	LRFD
307 STD/SSLT	461 STD/SSLT
293 OVS	439 OVS

End-Plate	Beam
F_y = 36 ksi F_u = 58 ksi	F_y = 50 ksi F_u = 65 ksi

STD = Standard holes
OVS = Oversized holes
SSLT = Short-slotted holes transverse to direction of load
N = Threads included
X = Threads excluded
SC = Slip critical

Note: Slip-critical bolt values assume no more than one filler has been provided or bolts have been added to distribute loads in the fillers.

UNSTIFFENED SEATED CONNECTIONS

An unstiffened seated connection is made with a seat angle and a top angle, as illustrated in Figure 10-7. These angles may be bolted or welded to the supported beam as well as to the supporting member.

While the seat angle is assumed to carry the entire end reaction of the supported beam, the top angle must be placed as shown or in the optional side location for satisfactory performance and stability (Roeder and Dailey, 1989). The top angle and its connections are not usually sized for any calculated strength requirement. A $^1/_4$-in.-thick angle with a 4-in. vertical leg dimension will generally be adequate. It may be bolted with two bolts through each leg or welded with minimum size welds to either the supported or the supporting members.

When the top angle is welded to the support and/or the supported beam, adequate flexibility must be provided in the connection. As illustrated in Figure 10-7(b), line welds are placed along the toe of each angle leg. Note that welding along the sides of the vertical angle leg must be avoided as it would inhibit the flexibility and, therefore, the necessary end rotation of the connection. The performance of such a connection would not be as intended for unstiffened seated connections.

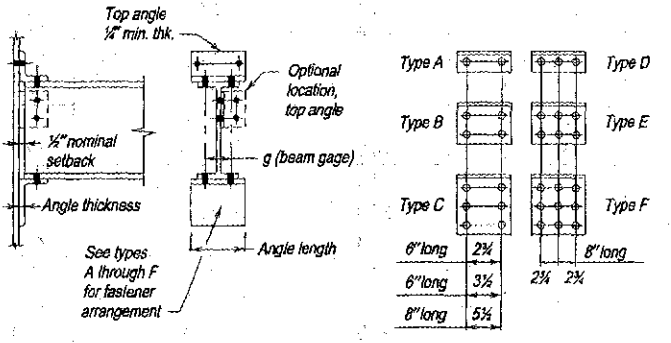

(a) All-bolted

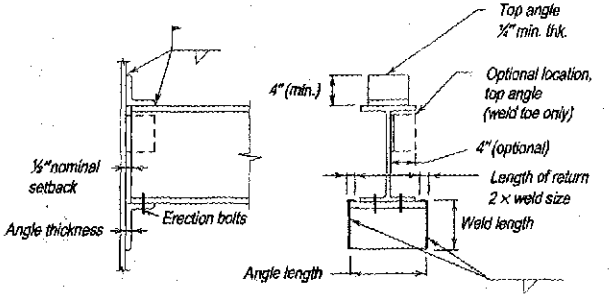

(b) All-welded

Fig. 10-7. Unstiffened seated connections.

Design Checks

The available strength of an unstiffened seated connection is determined from the applicable limit states for bolts (see Part 7), welds (see Part 8), and connecting elements (see Part 9). Additionally, the strength of the supported beam web must be checked for the limit states of web local yielding and web local crippling. In all cases, the available strength, ϕR_n or R_n/Ω, must equal or exceed the required strength, R_u or R_a. The available strength for web local yielding and web local crippling, ϕR_n or R_n/Ω, is determined per AISC *Specification* Sections J10.2 and J10.3, respectively, which is simplified using the constants in Table 9-4. For further information, see Carter et al. (1997).

Shop and Field Practices

Unstiffened seated connections may be made to the webs and flanges of supporting columns. If adequate clearance exists, unstiffened seated connections may also be made to the webs of supporting girders.

To provide for overrun in beam length, the nominal setback for the beam end is $1/2$ in. To provide for underrun in beam length, this setback is assumed to be $3/4$ in. for calculation purposes.

The seat angle is preferably shop-attached to the support. Since the bottom flange typically establishes the plane of reference for seated connections, mill variation in beam depth may result in variation in the elevation of the top flange. Such variation is usually of no consequence with concrete slab and metal deck floors, but may be a concern when a grating or steel-plate floor is used. Unless special care is required, the usual mill tolerances for member depth of $1/8$ in. to $1/4$ in. are ignored. However, when the top angle is shop-attached to the supported beam and field bolted to the support, mill variation in beam depth must be considered. Slotted holes, as illustrated in Figure 10-8(a), will accommodate both overrun and underrun in the beam depth and are the preferred method for economy and convenience to both the fabricator and erector. Alternatively, the angle could be shipped loose with clearance provided, as shown in Figure 10-8(b). When the top angle is to be field-welded to the support, no provision for mill variation in the beam depth is necessary.

When the top angle is shop-attached to the support, an appropriate erection clearance is provided, as illustrated in Figure 10-8(c).

Bolted/Welded Unstiffened Seated Connections

Tables 10-5 and 10-6 may be used in combination to design unstiffened seated connections that are welded to the supporting member and bolted to the supported beam, or bolted to the supporting member and welded to the supported beam.

DESIGN TABLE DISCUSSION (TABLES 10-5 AND 10-6)

Table 10-5. All-Bolted Unstiffened Seated Connections

Table 10-5 is a design aid for all-bolted unstiffened seats. Seat available strengths are tabulated, assuming a 4-in. outstanding leg, for angle material with $F_y = 36$ ksi and $F_u = 58$ ksi and beam material with $F_y = 50$ ksi and $F_u = 65$ ksi. All values are for comparison with the governing LRFD or ASD load combination.

Tabulated seat available strengths consider the limit states of shear yielding and flexural yielding of the outstanding angle leg. The required bearing length, $l_{b,req}$, is determined by

the designer as the larger value of l_b required for the limit states of local yielding and crippling of the beam web. As noted in AISC *Specification* Section J10.2, $l_{b,req}$ must not be less than k_{des}. A nominal beam setback of $^1/_2$ in. is assumed in these tables. However, this setback is increased to $^3/_4$ in. for calculation purposes in determining the tabulated values to account for the possibility of underrun in beam length.

Bolt available strengths are tabulated for the seat types illustrated in Figure 10-7(a) with $^3/_4$-in.-, $^7/_8$-in.- and 1-in.-diameter Group A and Group B bolts. Vertical spacing of bolts and gages in seat angles may be arranged to suit conditions, provided the edge distance and spacing requirements in AISC *Specification* Section J3 are met. Where thick angles are used, larger entering and tightening clearances may be required in the outstanding angle leg. The suitability of angle sizes and thicknesses for the seat types illustrated in Figure 10-7(a) is also listed in Table 10-5.

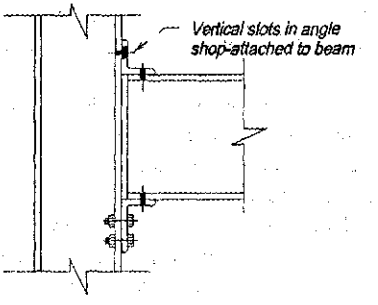

(a) Vertical slots

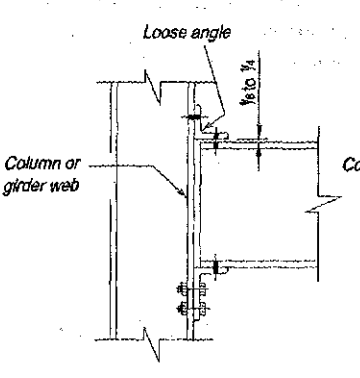

(b) Loose angle with clearance as shown

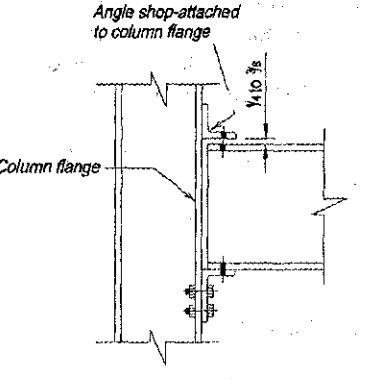

(c) Shop-attached to column flange with clearance as shown

Fig. 10-8. Providing for variation in beam depth with seated connections.

Table 10-6. All-Welded Unstiffened Seated Connections

Table 10-6 is a design aid for all-welded unstiffened seats (exception: the beam is bolted to the seat). Seat available strengths are tabulated, assuming either a $3^1/_2$-in. or 4-in. outstanding leg (as indicated in the table), for angle material with $F_y = 36$ ksi and $F_u = 58$ ksi and beam material with $F_y = 50$ ksi and $F_u = 65$ ksi. Electrode strength is assumed to be 70 ksi.

Tabulated seat available strengths consider the limit states of shear yielding and flexural yielding of the outstanding angle leg. The required bearing length, $l_{b,req}$, is to be determined by the designer as the larger value of l_b required for the limit states of local yielding and crippling of the beam web. As noted in AISC *Specification* Section J10.2, $l_{b,req}$ must not be less than k_{des}. A nominal beam setback of $^1/_2$ in. is assumed in these tables. However, this setback is increased to $^3/_4$ in. for calculation purposes in determining the tabulated values to account for the possibility of underrun in beam length.

Tabulated weld available strengths are determined using the elastic method. The minimum and maximum angle thickness for each case is also tabulated. While these tabular values are based upon 70-ksi electrodes, they may be used for other electrodes, provided the tabular values are adjusted for the electrodes used (e.g., for 60-ksi electrodes, the tabular values are to be multiplied by 60/70 = 0.866, etc.) and the welds and base metal meet the required strength level provisions of AISC *Specification* Table J2.5. Should combinations of material thickness and weld size selected from Table 10-6 exceed the limits in AISC *Specification* Section J2.2, the weld size or material thickness should be increased as required. Table 8-4 is not applicable to the design of these welds in this type of connection.

As can be seen from the following, reduction of the tabulated weld strength is not normally required when unstiffened seats line up on opposite sides of the supporting web. From Salmon et al. (2009), the available strength, ϕR_n or R_n/Ω, of the welds to the support is

LRFD		ASD	
$\phi R_n = 2\left(\dfrac{1.392DL}{\sqrt{1+\dfrac{20.25e^2}{L^2}}}\right)$	(10-2a)	$\dfrac{\phi R_n}{\Omega} = 2\left(\dfrac{0.928DL}{\sqrt{1+\dfrac{20.25e^2}{L^2}}}\right)$	(10-2b)

where

D = number of sixteenths-of-an-inch in the weld size

L = vertical leg dimension of the seat angle, in.

e = eccentricity of the beam end reaction with respect to the weld lines, in.

The term in the denominator that accounts for the eccentricity, e, increases the weld size far beyond what is required for shear alone, but with seats on both sides of the supporting member web, the forces due to eccentricity react against each other and have no effect on the web. Furthermore, as illustrated in Figure 10-9, there are actually two shear planes per weld; one at each weld toe and heel for a total of four shear planes. Thus, for an 8-in.-long L7×4×1 seat angle supporting a LRFD required strength of 70 kips or an equivalent ASD required strength of 46.7 kips, the minimum support thickness is determined as follows:

LRFD	ASD
$\frac{70 \text{ kips}}{0.75(0.6)(65 \text{ ksi})(7 \text{ in.})(4 \text{ planes})} = 0.0855 \text{ in.}$	$\frac{2.0(46.7 \text{ kips})}{0.6(65 \text{ ksi})(7 \text{ in.})(4 \text{ planes})} = 0.0855 \text{ in.}$

For the identical connection on both sides of the support, the minimum support thickness is less than $^3/_{16}$ in. Thus, the supporting web thickness is generally not a concern.

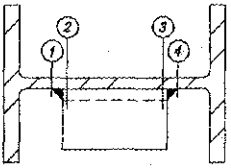

(a) Plan view

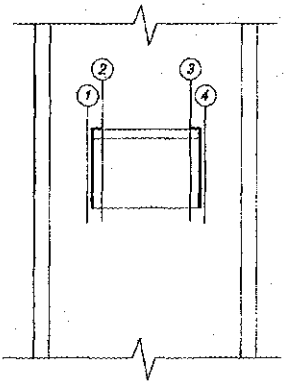

(b) Elevation

Fig. 10-9. Shear planes in column web for unstiffened seated connections.

Angle
F_y = 36 ksi

Table 10-5
All-Bolted Unstiffened Seated Connections

L6

Outstanding Angle Leg Length Strength, kips

Required Bearing Length $l_{b,\,req}$, in.	Angle Length, in. 6 — Angle Thickness, in. 3/8 ASD	3/8 LRFD	1/2 ASD	1/2 LRFD	5/8 ASD	5/8 LRFD	3/4 ASD	3/4 LRFD	1 ASD	1 LRFD	Min. Angle Leg in.
1/2	18.2	27.3									
9/16	16.2	24.3	43.2	64.8							
5/8	14.6	21.9	43.1	64.8							
11/16	13.2	19.9	37.0	55.5							
3/4	12.1	18.2	32.3	48.6							
13/16	11.2	16.8	28.7	43.2							
7/8	10.4	15.6	25.9	38.9							
15/16	9.70	14.6	23.5	35.3	54.0	81.0					
1	9.09	13.7	21.6	32.4	50.5	75.9					
1 1/16	8.56	12.9	19.9	29.9	44.9	67.5					
1 1/8	8.08	12.2	18.5	27.8	40.4	60.8					
1 3/16	7.66	11.5	17.2	25.9	36.7	55.2					
1 1/4	7.28	10.9	16.2	24.3	33.7	50.6	64.8	97.2			
1 5/16	6.93	10.4	15.2	22.9	31.1	46.7	64.7	97.2			3 1/2
1 3/8	6.61	9.94	14.4	21.6	28.9	43.4	58.2	87.5			
1 7/16	6.33	9.51	13.6	20.5	26.9	40.5	52.9	79.5			
1 1/2	6.06	9.11	12.9	19.4	25.3	38.0	48.5	72.9			
1 5/8	5.60	8.41	11.8	17.7	22.5	33.8	41.6	62.5			
1 3/4	5.20	7.81	10.8	16.2	20.2	30.4	36.4	54.7			
1 7/8	4.85	7.29	10.0	15.0	18.4	27.6	32.3	48.6	86.4	130	
2	4.55	6.83	9.24	13.9	16.8	25.3	29.1	43.7	86.2	130	
2 1/8	4.28	6.43	8.62	13.0	15.5	23.4	26.5	39.8	73.9	111	
2 1/4	4.04	6.08	8.08	12.2	14.4	21.7	24.3	36.5	64.7	97.2	
2 3/8	3.83	5.76	7.61	11.4	13.5	20.3	22.4	33.6	57.5	86.4	
2 1/2	3.64	5.47	7.19	10.8	12.6	19.0	20.8	31.2	51.7	77.8	
2 5/8	3.46	5.21	6.81	10.2	11.9	17.9	19.4	29.2	47.0	70.7	
2 3/4	3.31	4.97	6.47	9.72	11.2	16.9	18.2	27.3	43.1	64.8	
2 7/8	3.16	4.75	6.16	9.26	10.6	16.0	17.1	25.7	39.8	59.8	
3	3.03	4.56	5.88	8.84	10.1	15.2	16.2	24.3	37.0	55.5	4
3 1/8	2.91	4.37	5.62	8.45	9.62	14.5	15.3	23.0	34.5	51.8	
3 1/4	2.80	4.21	5.39	8.10	9.19	13.8	14.6	21.9	32.3	48.6	

Bolt Available Strength, kips

Bolt Dia., in.	Bolt Group	Thread Cond.	Connection Type from Figure 10-7(a) A ASD	A LRFD	B ASD	B LRFD	C ASD	C LRFD
3/4	Group A	N	23.9	35.8	47.7	71.6	71.6	107
		X	30.1	45.1	60.1	90.2	90.2	135
	Group B	N	30.1	45.1	60.1	90.2	90.2	135
		X	37.1	55.7	74.8	111	111	167
7/8	Group A	N	32.5	48.7	64.9	97.4	97.4	146
		X	40.9	61.3	81.7	123	123	184
	Group B	N	40.9	61.3	81.7	123	123	184
		X	50.5	75.7	101	151	151	227
1	Group A	N	42.4	63.6	84.8	127	—	—
		X	53.4	80.1	107	160	—	—
	Group B	N	53.4	80.1	107	160	—	—
		X	65.9	98.9	132	198	—	—

Available Angles

Connection Type	Angle Size	f, in.
A, D	4×3	3/8 – 1/2
	4×3 1/2	3/8 – 1/2
	4×4	3/8 – 3/4
B, E	6×4	3/8 – 3/4
	7×4	3/8 – 3/4
	8×4	1/2 – 1
C[b], F[b]	8×4	1/2 – 1

[b] Not suitable for use with 1-in.-diameter bolts.

ASD	LRFD
Ω = 2.00	ϕ = 0.75

For tabulated values above the heavy line, shear yielding of the angle leg controls the available strength.

L8

Table 10-5 (continued)
All-Bolted Unstiffened Seated Connections

Angle
F_y = 36 ksi

Outstanding Angle Leg Length Strength, kips

Required Bearing Length $l_{b,\,req}$, in.	Angle Length, in.										Min. Angle Leg
	8										
	Angle Thickness, in.										
	3/8		1/2		5/8		3/4		1		
	ASD	LRFD	ASD	LRFD	ASD	LRFD	ASD	LRFD	ASD	LRFD	in.
1/2	24.3	36.5									
9/16	21.6	32.4	57.6	86.4							
5/8	19.4	29.2	57.5	86.4							
11/16	17.6	26.5	49.3	74.1							
3/4	16.2	24.3	43.1	64.8							
13/16	14.9	22.4	38.3	57.6							
7/8	13.9	20.8	34.5	51.8							
15/16	12.9	19.4	31.4	47.1	72.0	108					
1	12.1	18.2	28.7	43.2	67.4	101					
1 1/16	11.4	17.2	26.5	39.9	59.9	90					
1 1/8	10.8	16.2	24.6	37.0	53.9	81.0					
1 3/16	10.2	15.3	23.0	34.6	49.0	73.6					
1 1/4	9.70	14.6	21.6	32.4	44.9	67.5	86.4	130			
1 5/16	9.24	13.9	20.3	30.5	41.5	62.3	86.2	130			3 1/2
1 3/8	8.82	13.3	19.2	28.8	38.5	57.9	77.6	117			
1 7/16	8.44	12.7	18.2	27.3	35.9	54.0	70.5	106			
1 1/2	8.08	12.2	17.2	25.9	33.7	50.6	64.7	97.2			
1 5/8	7.46	11.2	15.7	23.6	29.9	45.0	55.4	83.3			
1 3/4	6.93	10.4	14.4	21.6	26.9	40.5	48.5	72.9			
1 7/8	6.47	9.72	13.3	19.9	24.5	36.8	43.1	64.8			
2	6.06	9.11	12.3	18.5	22.5	33.8	38.8	58.3	115	173	
2 1/8	5.71	8.58	11.5	17.3	20.7	31.2	35.3	53.0	98.5	148	
2 1/4	5.39	8.10	10.8	16.2	19.2	28.9	32.3	48.6	86.2	130	
2 3/8	5.11	7.67	10.1	15.2	18.0	27.0	29.8	44.9	76.6	115	
2 1/2	4.85	7.29	9.58	14.4	16.8	25.3	27.7	41.7	69.0	104	
2 5/8	4.62	6.94	9.08	13.6	15.9	23.8	25.9	38.9	62.7	94.3	
2 3/4	4.41	6.63	8.62	13.0	15.0	22.5	24.3	36.5	57.5	86.4	
2 7/8	4.22	6.34	8.21	12.3	14.2	21.3	22.8	34.3	53.1	79.8	
3	4.04	6.08	7.84	11.8	13.5	20.3	21.6	32.4	49.3	74.1	4
3 1/8	3.88	5.83	7.50	11.3	12.8	19.3	20.4	30.7	46.0	69.1	
3 1/4	3.73	5.61	7.19	10.8	12.2	18.4	19.4	29.2	43.1	64.8	

Bolt Available Strength, kips

Bolt Dia., in.	Bolt Group	Thread Cond.	Connection Type from Figure 10-7(a) D ASD	D LRFD	E ASD	E LRFD	F ASD	F LRFD
3/4	Group A	N	35.8	53.7	71.6	107	107	161
		X	45.1	67.6	90.2	135	135	203
	Group B	N	45.1	67.6	90.2	135	135	203
		X	55.7	83.5	111	167	167	251
7/8	Group A	N	48.7	73.0	97.4	146	146	219
		X	61.3	92.0	123	184	184	276
	Group B	N	61.3	92.0	123	184	184	276
		X	75.7	114	151	227	227	341
1	Group A	N	63.6	95.4	127	191	[illegible]	—
		X	80.1	120	160	240	[illegible]	—
	Group B	N	80.1	120	160	240	[illegible]	—
		X	98.9	148	198	297	[illegible]	—

Available Angles

Connection Type	Angle Size	t, in.
A, D	4×3	3/8 – 1/2
	4×3 1/2	3/8 – 1/2
	4×4	3/8 – 3/4
B, E	6×4	3/8 – 3/4
	7×4	3/8 – 3/4
	8×4	1/2 – 1
C[b], F[b]	8×4	1/2 – 1

[b]Not suitable for use with 1-in.-diameter bolts.

ASD	LRFD
Ω = 2.00	ϕ = 0.75

For tabulated values above the heavy line, shear yielding of the angle leg controls the available strength.

Angle
F_y = 36 ksi

Table 10-6
All-Welded Unstiffened Seated Connections

L6

Outstanding Angle Leg Length Strength, kips

Required Bearing Length $l_{b,\,req}$, in.	Angle Length, in. 6 — Angle Thickness, in. 3/8 ASD	3/8 LRFD	1/2 ASD	1/2 LRFD	5/8 ASD	5/8 LRFD	3/4 ASD	3/4 LRFD	1 ASD	1 LRFD	Min. Angle Leg in.
1/2	18.2	27.3									
9/16	16.2	24.3									
5/8	14.6	21.9	43.1	64.8							
11/16	13.2	19.9	37.0	55.5							
3/4	12.1	18.2	32.3	48.6							
13/16	11.2	16.8	28.7	43.2							
7/8	10.4	15.6	25.9	38.9							
15/16	9.70	14.6	23.5	35.3	54.0	81.0					
1	9.09	13.7	21.6	32.4	50.5	75.9					
1 1/16	8.56	12.9	19.9	29.9	44.9	67.5					
1 1/8	8.08	12.2	18.5	27.8	40.4	60.8					
1 3/16	7.66	11.5	17.2	25.9	36.7	55.2					
1 1/4	7.28	10.9	16.2	24.3	33.7	50.6					
1 5/16	6.93	10.4	15.2	22.9	31.1	46.7	64.7	97.2			3 1/2
1 3/8	6.61	9.94	14.4	21.6	28.9	43.4	58.2	87.5			
1 7/16	6.33	9.51	13.6	20.5	26.9	40.5	52.9	79.5			
1 1/2	6.06	9.11	12.9	19.4	25.3	38.0	48.5	72.9			
1 5/8	5.60	8.41	11.8	17.7	22.5	33.8	41.6	62.5			
1 3/4	5.20	7.81	10.8	16.2	20.2	30.4	36.4	54.7			
1 7/8	4.85	7.29	9.95	15.0	18.4	27.6	32.3	48.6			
2	4.55	6.83	9.24	13.9	16.8	25.3	29.1	43.7	86.2	130	
2 1/8	4.28	6.43	8.62	13.0	15.5	23.4	26.5	39.8	73.9	111	
2 1/4	4.04	6.06	8.08	12.2	14.4	21.7	24.3	36.5	64.7	97.2	
2 3/8	3.83	5.76	7.61	11.4	13.5	20.3	22.4	33.6	57.5	86.4	
2 1/2	3.64	5.47	7.19	10.8	12.6	19.0	20.8	31.2	51.7	77.8	
2 5/8	3.46	5.21	6.81	10.2	11.9	17.9	19.4	29.2	47.0	70.7	
2 3/4	3.31	4.97	6.47	9.72	11.2	16.9	18.2	27.3	43.1	64.8	
2 7/8	3.16	4.75	6.16	9.26	10.6	16.0	17.1	25.7	39.8	59.8	
3	3.03	4.56	5.88	8.84	10.1	15.2	16.2	24.3	37.0	55.5	4
3 1/8	2.91	4.37	5.62	8.45	9.62	14.5	15.3	23.0	34.5	51.8	
3 1/4	2.80	4.21	5.39	8.10	9.19	13.8	14.6	21.9	32.3	48.6	

Weld (70 ksi) Available Strength, kips

70-ksi Weld Size, in.	Seat Angle Size (long leg vertical) 4 × 3 1/2 ASD	4 × 3 1/2 LRFD	5 × 3 1/2 ASD	5 × 3 1/2 LRFD
Design				
1/4	11.5	17.2	17.2	25.8
5/16	14.3	21.5	21.5	32.2
3/8	17.2	25.8	25.8	38.7
7/16	20.1	30.1	30.1	45.2
1/2	—	—	34.4	51.6
9/16	—	—	38.7	58.1
5/8	—	—	43.0	64.5
11/16	—	—	47.3	71.0

Available Angle Thickness, in.

Minimum	3/8	3/8
Maximum	1/2	3/4

ASD	LRFD
Ω = 2.00	φ = 0.75

For tabulated values above the heavy line, shear yielding of the angle leg controls the available strength.

— Indicates weld size exceeds that permitted for maximum angle thickness of 1/2 in.

L8

Table 10-6 (continued)
All-Welded Unstiffened Seated Connections

Angle
F_y = 36 ksi

Outstanding Angle Leg Length Strength, kips

Required Bearing Length $l_{b,\,req}$, in.	Angle Length, in. 8 — Angle Thickness, in. 3/8 ASD	3/8 LRFD	1/2 ASD	1/2 LRFD	5/8 ASD	5/8 LRFD	3/4 ASD	3/4 LRFD	1 ASD	1 LRFD	Min. Angle Leg in.
1/2	24.3	36.5									
9/16	21.6	32.4									
5/8	19.4	29.2	57.5	86.4							
11/16	17.6	26.5	49.3	74.1							
3/4	16.2	24.3	43.1	64.8							
13/16	14.9	22.4	38.3	57.6							
7/8	13.9	20.8	34.5	51.8							
15/16	12.9	19.4	31.4	47.1	72.0	108					
1	12.1	18.2	28.7	43.2	67.4	101					
1 1/16	11.4	17.2	26.5	39.9	59.9	90.0					
1 1/8	10.8	16.2	24.6	37.0	53.9	81.0					
1 3/16	10.2	15.3	23.0	34.6	49.0	73.6					
1 1/4	9.70	14.6	21.6	32.4	44.9	67.5					
1 5/16	9.24	13.9	20.3	30.5	41.5	62.3	86.2	130			3 1/2
1 3/8	8.82	13.3	19.2	28.8	38.5	57.9	77.6	117			
1 7/16	8.44	12.7	18.2	27.3	35.9	54.0	70.5	106			
1 1/2	8.08	12.2	17.2	25.9	33.7	50.6	64.7	97.2			
1 5/8	7.46	11.2	15.7	23.6	29.9	45.0	55.4	83.3			
1 3/4	6.93	10.4	14.4	21.6	26.9	40.5	48.5	72.9			
1 7/8	6.47	9.72	13.3	19.9	24.5	36.8	43.1	64.8			
2	6.06	9.11	12.3	18.5	22.5	33.8	38.8	58.3	115	173	
2 1/8	5.71	8.58	11.5	17.3	20.7	31.2	35.3	53.0	98.5	148	
2 1/4	5.39	8.10	10.8	16.2	19.2	28.9	32.3	48.6	86.2	130	
2 3/8	5.11	7.67	10.1	15.2	18.0	27.0	29.8	44.9	76.6	115	
2 1/2	4.85	7.29	9.58	14.4	16.8	25.3	27.7	41.7	69.0	104	
2 5/8	4.62	6.94	9.08	13.6	15.9	23.8	25.9	38.9	62.7	94.3	
2 3/4	4.41	6.63	8.62	13.0	15.0	22.5	24.3	36.5	57.5	86.4	
2 7/8	4.22	6.34	8.21	12.3	14.2	21.3	22.8	34.3	53.1	79.8	
3	4.04	6.08	7.84	11.8	13.5	20.3	21.6	32.4	49.3	74.1	4
3 1/8	3.88	5.83	7.50	11.3	12.8	19.3	20.4	30.7	46.0	69.1	
3 1/4	3.73	5.61	7.19	10.8	12.2	18.4	19.4	29.2	43.1	64.8	

Weld (70 ksi) Available Strength, kips

70-ksi Weld Size, in.	Seat Angle Size (long leg vertical) 6 × 4 ASD	6 × 4 LRFD	7 × 4 ASD	7 × 4 LRFD	8 × 4 ASD	8 × 4 LRFD
Design						
1/4	21.8	32.7	28.5	42.7	35.6	53.4
5/16	27.3	40.9	35.6	53.4	44.5	66.7
3/8	32.7	49.1	42.7	64.1	53.4	80.1
7/16	38.2	57.2	49.8	74.7	62.3	93.4
1/2	43.6	65.4	57.0	85.4	71.2	107
9/16	49.1	73.6	64.1	96.1	80.1	120
5/8	54.5	81.8	71.2	107	89.0	133
11/16	60.0	90.0	78.3	117	97.9	147

Available Angle Thickness, in.

Minimum	3/8	3/8	1/2
Maximum	3/4	3/4	1

ASD	LRFD
Ω = 2.00	φ = 0.75

For tabulated values above the heavy line, shear yielding of the angle leg controls the available strength.

STIFFENED SEATED CONNECTIONS

A stiffened seated connection is made with a seat plate and stiffening element (e.g., a plate, structural tee, or pair of angles) and a top angle, as illustrated in Figure 10-10. The top angle may be bolted or welded to the supported beam as well as to the supporting member and the stiffening element may be bolted or welded to the support. The supported beam is bolted to the seat plate.

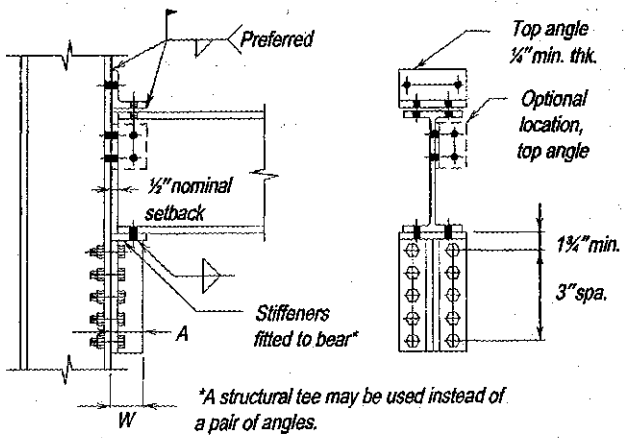

(a) All-bolted

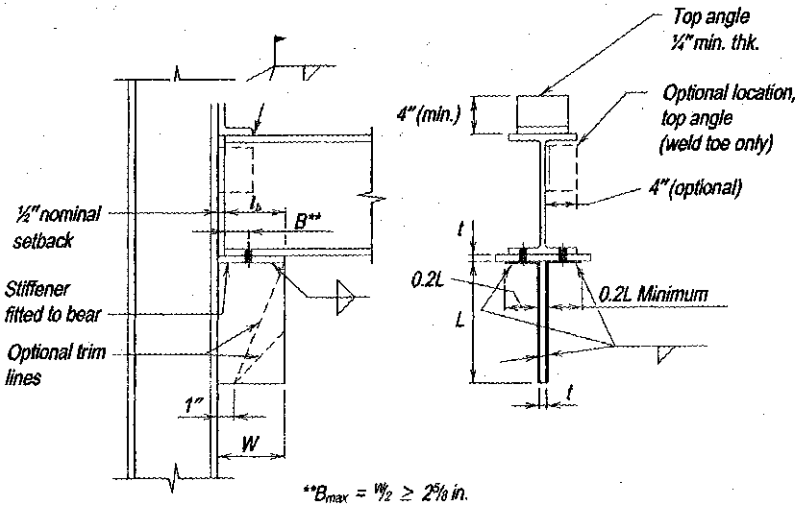

(b) Bolted/welded

Fig. 10-10. Stiffened seated connections.

The stiffening element is assumed to carry the entire end reaction of the supported beam applied at a distance equal to $0.8W$, where W is the dimension of the stiffening element parallel to the beam web. The top angle must be placed as shown or in the optional side location for satisfactory performance and stability (Roeder and Dailey, 1989). The top angle and its connections are not usually sized for any calculated strength requirement. A $^1/_4$-in.-thick angle with a 4-in. vertical leg dimension will generally be adequate. It may be fastened with two bolts through each leg or welded with minimum size welds to either the supported or the supporting members.

When the top angle is welded to the support and/or the supported beam, adequate flexibility must be provided in the connection. As illustrated in Figure 10-10(b), line welds are placed along the toe of each angle leg. Note that welding along the sides of the vertical angle leg must be avoided as it would inhibit the flexibility and, therefore, the necessary end rotation of the connection. The performance of such a connection would not be as intended for simple shear connections.

Design Checks

The available strength of a stiffened seated connection is determined from the applicable limit states for the bolts (see Part 7), welds (see Part 8), and connecting elements (see Part 9). Additionally, the strength of the supported beam web must be checked for the limit states of web local yielding and web local crippling. In all cases, the available strength, ϕR_n or R_n/Ω, must equal or exceed the required strength, R_u or R_a. The available strength for web local yielding and web local crippling, ϕR_n or R_n/Ω, is determined per AISC *Specification* Sections J10.2 and J10.3, respectively, which is simplified using the constants in Table 9-4.

When stiffened seated connections, such as the one shown in Figure 10-10(b), are made to one side of a supporting column web, the column web may also need to be investigated for resistance to punching shear. In lieu of a more detailed analysis, Sputo and Ellifritt (1991) showed that punching shear will not be critical if the design parameters following and those summarized graphically in Figure 10-10(b) are met.

1. This simplified approach is applicable to the following column sections:

W14×43 to 730	W12×40 to 336	W10×33 to 112
W8×24 to 67	W6×20 and 25	W5×16 and 19

2. The supported beam must be bolted to the seat plate with high-strength bolts to account for the prying action caused by rotation of the connection. Welding the beam to the seat plate is not recommended because welds may lack the required strength and ductility. The centerline of the bolts should be located no more than the greater of $W/2$ or $2^5/_8$ in. from the column web face.
3. For seated connections where $W = 8$ in. or 9 in. and $3^1/_2$ in. $< B \leq W/2$, or where $W = 7$ in. and 3 in. $< B \leq W/2$ for a W14×43 column, refer to Sputo and Ellifritt (1991).
4. The top angle may be bolted or welded, but must have a minimum $^1/_4$-in. thickness.
5. The seat plate should not be welded to the beam flange.

See also Ellifritt and Sputo (1999).

Shop and Field Practices

The comments for unstiffened seated connections are equally applicable to stiffened seated connections.

DESIGN TABLE DISCUSSION (TABLES 10-7 AND 10-8)

Table 10-7. All-Bolted Stiffened Seated Connections

Table 10-7 is a design aid for all-bolted stiffened seats. Stiffener available strengths are tabulated for stiffener material with $F_y = 36$ ksi and $F_u = 58$ ksi and with $F_y = 50$ ksi and $F_u = 65$ ksi.

Tabulated values consider the limit state of bearing on the stiffening material. The designer must independently check the available strength of the beam web based upon the limit states of web local yielding and web local crippling. A nominal beam setback of 1/2 in. is assumed in these tables. However, this setback is increased to 3/4 in. for calculation purposes in determining the tabulated values to account for the possibility of underrun in beam length.

Bolt available strengths are tabulated for two vertical rows of from three to seven 3/4-in.-, 7/8-in.- and 1-in.-diameter Group A and Group B high-strength bolts based upon the limit state of bolt shear. Vertical spacing of bolts and gages in seat angles may be arranged to suit conditions, provided the edge distance and spacing requirements in AISC *Specification* Section J3 are met.

Table 10-8. Bolted/Welded Stiffened Seated Connections

Table 10-8 is a design aid for stiffened seated connections welded to the support and bolted to the supported beam. Electrode strength is assumed to be 70 ksi.

Weld available strengths are tabulated using the elastic method. While these tabular values are based upon 70-ksi electrodes, they may be used for other electrodes, provided the tabular values are adjusted for the electrodes used (e.g., for 60-ksi electrodes, the tabular values are multiplied by 60/70 = 0.866, etc.) and the weld and base metal meet the required strength provisions of AISC *Specification* Table J2.5.

The thickness of the horizontal seat plate or tee flange should not be less than 3/8 in. If the seat and stiffener are built up from separate plates, the stiffener should be finished to bear under the seat. The welds connecting the two plates should have a strength equal to or greater than the horizontal welds to the support under the seat plate.

The designer must independently check the beam web for web local yielding and web local crippling. The nominal beam setback of 1/2 in. should be assumed to be 3/4 in. for calculation purposes to account for possible underrun in beam length.

The stiffener thickness is conservatively determined as follows. The minimum stiffener plate thickness, t, for supported beams with unstiffened webs is the supported beam web thickness, t_w, multiplied by the ratio of F_y of the beam material to F_y of the stiffener material (e.g., $F_{y,\text{beam}} = 50$ ksi, $F_{y,\text{stiffener}} = 36$ ksi, $t = t_w \times 50/36$ minimum). Additionally, the minimum stiffener plate thickness, t, should be at least $2w$ for stiffener material with

F_y = 36 ksi or 1.5w for stiffener material with F_y = 50 ksi, where w is the weld size for 70-ksi electrodes.

For 70-ksi electrodes, the minimum column web thickness is

$$t_{min} = \frac{3.09D}{F_u} \tag{9-2}$$

where

D = weld size in sixteenths of an inch

F_u = specified minimum tensile strength of the connecting element, ksi

When welds line up on opposite sides of the support, the minimum thickness is the sum of the thicknesses required for each weld. In either case, when less than the minimum material thickness is present, the weld available strength must be reduced by the ratio of the thickness provided to the minimum thickness. As with unstiffened seated connections, the contribution of eccentricity to the required shear yielding strength is negligible. Should combinations of material thickness and weld size selected from Table 10-8 exceed the limits of AISC *Specification* Section J2.2, the weld size or material thickness must be increased.

Table 10-7
All-Bolted Stiffened Seated Connections

Stiffener Material		Outstanding Angle Leg Available Strength, kips[a]											
		$F_y = 36$ ksi						$F_y = 50$ ksi					
Stiffener Outstanding Leg, W, in.[b]		3½		4		5		3½		4		5	
		ASD	LRFD	ASD	LRFD	ASD	LRFD	ASD	LRFD	ASD	LRFD	ASD	LRFD
Thickness of Stiffener Outstanding Legs, in.	5/16	55.7	83.5	65.8	98.7	86.1	129	77.3	116	91.4	137	120	179
	3/8	66.8	100	79.0	118	103	155	92.8	139	110	165	143	215
	1/2	89.1	134	105	158	138	207	124	186	146	219	191	287
	5/8	111	167	132	197	172	258	155	232	183	274	239	359
	3/4	134	200	158	237	207	310	186	278	219	329	287	430

Use minimum 3/8-in.-thick seat plate wide enough to extend beyond outstanding legs of stiffener.

[a] See AISC *Specification* Section J7.

[b] Beam bearing length assumed 3/4 in. less for calculation purposes.

Bolt Available Strength, kips													
Bolt Diameter, in.	Bolt Group	Thread Cond.	Number of Bolts in One Vertical Row										
			3		4		5		6		7		
			ASD	LRFD	ASD	LRFD	ASD	LRFD	ASD	LRFD	ASD	LRFD	
3/4	Group A	N	71.6	107	95.5	143	119	179	143	215	167	251	
		X	90.2	135	120	180	150	225	180	271	210	316	
	Group B	N	90.2	135	120	180	150	225	180	271	210	316	
		X	111	167	149	223	186	278	223	334	260	390	
7/8	Group A	N	97.4	146	130	195	162	243	195	292	227	341	
		X	123	184	163	245	204	307	245	368	286	429	
	Group B	N	123	184	163	245	204	307	245	368	286	429	
		X	151	227	202	303	252	379	303	454	353	530	
1	Group A	N	127	191	170	254	212	318	254	382	297	445	
		X	160	240	214	320	267	400	320	480	374	560	
	Group B	N	160	240	214	320	267	400	320	480	374	560	
		X	198	297	264	396	330	495	396	593	462	692	

ASD	LRFD
$\Omega = 2.00$	$\phi = 0.75$
$\frac{R_n}{\Omega} = \frac{1.8F_yA_{pb}}{2.00}$	$\phi R_n = 0.75\,(1.8F_yA_{pb})$

Table 10-8
Bolted/Welded Stiffened Seated Connections
Weld Available Strength, kips

L, in.	Width of Seat, W, in.											
	4								5			
	70-ksi Weld Size, in.								70-ksi Weld Size, in.			
	1/4		5/16		3/8		7/16		6/16		3/8	
	ASD	LRFD	ASD	LRFD	ASD	LRFD	ASD	LRFD	ASD	LRFD	ASD	LRFD
6	22.7	34.0	28.4	42.5	34.0	51.1	39.7	59.6	23.5	35.2	28.2	42.2
7	29.9	44.9	37.4	56.1	44.9	67.3	52.4	78.6	31.2	46.9	37.5	56.2
8	37.8	56.7	47.2	70.8	56.7	85.0	66.1	99.2	39.8	59.8	47.8	71.7
9	46.1	69.2	57.7	86.5	69.2	104	80.7	121	49.1	73.7	59.0	88.5
10	54.9	82.3	68.6	103	82.3	123	96.0	144	59.0	88.5	70.8	106
11	63.9	95.8	79.8	120	95.8	144	112	168	69.4	104	83.3	125
12	73.1	110	91.4	137	110	165	128	192	80.2	120	96.2	144
13	82.5	124	103	155	124	186	144	217	91.3	137	110	164
14	92.1	138	115	173	138	207	161	242	103	154	123	185
15	102	152	127	191	152	229	178	267	114	171	137	206
16	111	167	139	209	167	250	195	292	126	189	151	227
17	121	181	151	227	181	272	212	318	138	207	165	248
18	131	196	163	245	196	294	229	343	150	225	180	270
19	140	211	175	263	211	316	246	369	162	243	194	291
20	150	225	188	281	225	338	263	394	174	261	209	313
21	160	240	200	300	240	359	280	419	186	279	223	335
22	169	254	212	318	254	381	296	445	198	297	238	357
23	179	269	224	336	269	403	313	470	210	315	252	378
24	189	283	236	354	283	425	330	495	222	334	267	400
25	198	297	248	372	297	446	347	520	235	352	281	422
26	208	312	260	390	312	468	364	546	247	370	296	444
27	217	326	272	408	326	489	380	571	259	388	310	466

Limitations for Connections to Column Webs	
$B = 2^5/_8$ in. max	$B = 2^5/_8$ in. max
W12×40, W14×43 for $L \geq 9$ in. limit weld $\leq 1/4$ in.	None

Notes:

1. Values shown assume 70-ksi electrodes. For 60-ksi electrodes, multiply tabular values by 0.857, or enter table with 1.17 times the required strength, R_n or R_w. For 80-ksi electrodes, multiply tabular values by 1.14, or enter table with 0.875 times the required strength.
2. Tabulated values are valid for stiffeners with minimum thickness of

$$t_{min} = \left(\frac{F_{y,\,beam}}{F_{y,\,stiffener}} \right) t_w$$

but not less than $2w$ for stiffeners with $F_y = 36$ ksi nor $1.5w$ for stiffeners with $F_y = 50$ ksi. In the above, t_w is the thickness of the unstiffened supported beam web and w is the nominal weld size.

3. Tabulated values may be limited by shear yielding of, or bearing on, the stiffener; refer to AISC *Specification* Sections J4.2 and J7, respectively

ASD	LRFD
$\Omega = 2.00$	$\phi = 0.75$

Table 10-8 (continued)
Bolted/Welded Stiffened Seated Connections
Weld Available Strength, kips

L, in.	Width of Seat, W, in.											
	5				6							
	70-ksi Weld Size, in.				70-ksi Weld Size, in.							
	$^7/_{16}$		$^1/_2$		$^5/_{16}$		$^3/_8$		$^7/_{16}$		$^1/_2$	
	ASD	LRFD	ASD	LRFD	ASD	LRFD	ASD	LRFD	ASD	LRFD	ASD	LRFD
6	32.8	49.3	37.5	56.3	19.9	29.9	23.9	35.9	27.9	41.9	31.9	47.8
7	43.7	65.6	50.0	75.0	26.7	40.1	32.0	48.1	37.4	56.1	42.7	64.1
8	55.8	83.7	63.8	95.6	34.3	51.4	41.1	61.7	48.0	72.0	54.8	82.2
9	68.8	103	78.6	118	42.5	63.8	51.1	76.6	59.6	89.3	68.1	102
10	82.6	124	94.4	142	51.4	77.2	61.7	92.6	72.0	108	82.3	123
11	97.2	146	111	167	60.9	91.3	73.1	110	85.3	128	97.4	146
12	112	168	128	192	70.8	106	85.0	127	99.2	149	113	170
13	128	192	146	219	81.2	122	97.4	146	114	170	130	195
14	144	216	164	246	91.9	138	110	165	129	193	147	220
15	160	240	183	274	103	154	123	185	144	216	165	247
16	176	265	202	302	114	171	137	205	160	240	183	274
17	193	290	221	331	126	188	151	226	176	264	201	301
18	210	315	240	360	137	206	165	247	192	288	219	329
19	227	340	259	388	149	223	179	268	208	313	238	357
20	244	365	278	417	161	241	193	289	225	337	257	386
21	260	391	298	446	173	259	207	311	242	362	276	414
22	277	416	317	476	185	277	222	332	258	388	295	443
23	294	442	336	505	197	295	236	354	275	413	315	472
24	311	467	356	534	209	313	250	376	292	438	334	501
25	328	492	375	563	221	331	265	397	309	464	353	530
26	345	518	395	592	233	349	280	419	326	489	373	559
27	362	543	414	621	245	368	294	441	343	515	392	588

Limitations for Connections to Column Webs	
$B \le 2^5/_8$ in. max	$B \le 3$ in. max
None	None

Notes:

1. Values shown assume 70-ksi electrodes. For 60-ksi electrodes, multiply tabular values by 0.857, or enter table with 1.17 times the required strength, R_u or R_a. For 80-ksi electrodes, multiply tabular values by 1.14, or enter table with 0.875 times the required strength.
2. Tabulated values are valid for stiffeners with minimum thickness of

$$t_{min} = \left(\frac{F_{y,\,beam}}{F_{y,\,stiffener}}\right) t_w$$

but not less than $2w$ for stiffeners with $F_y = 36$ ksi nor $1.5w$ for stiffeners with $F_y = 50$ ksi. In the above, t_w is the thickness of the unstiffened supported beam web and w is the nominal weld size.

3. Tabulated values may be limited by shear yielding of, or bearing on, the stiffener; refer to AISC *Specification* Sections J4.2 and J7, respectively.

ASD	LRFD
$\Omega = 2.00$	$\phi = 0.75$

Table 10-8 (continued)
Bolted/Welded Stiffened Seated Connections
Weld Available Strength, kips

L, in.	Width of Seat, *W*, in.											
	7								8			
	70-ksi Weld Size, in.								70-ksi Weld Size, in.			
	5/16		3/8		7/16		1/2		5/16		3/8	
	ASD	LRFD	ASD	LRFD	ASD	LRFD	ASD	LRFD	ASD	LRFD	ASD	LRFD
11	54.0	81.0	64.8	97.2	75.6	113	86.4	130	48.4	72.5	58.0	87.1
12	63.1	94.7	75.7	114	88.4	133	101	151	56.7	85.1	68.1	102
13	72.7	109	87.2	131	102	153	116	174	65.6	98.3	78.7	118
14	82.6	124	99.2	149	116	174	132	198	74.8	112	89.8	135
15	93.0	139	112	167	130	195	149	223	84.5	127	101	152
16	104	155	124	186	145	217	166	249	94.4	142	113	170
17	114	172	137	206	160	240	183	275	105	157	126	189
18	126	188	151	226	176	264	201	301	115	173	138	208
19	137	205	164	246	192	287	219	329	126	189	151	227
20	148	223	178	267	208	312	237	356	137	206	165	247
21	160	240	192	288	224	336	256	384	148	222	178	267
22	172	258	206	309	240	361	275	412	160	240	192	287
23	184	275	220	330	257	385	294	440	171	257	205	308
24	195	293	234	352	274	410	313	469	183	274	219	329
25	207	311	249	373	290	435	332	498	195	292	233	350
26	219	329	263	395	307	461	351	526	206	309	248	371
27	231	347	278	417	324	486	370	555	218	327	262	393
28	244	365	292	438	341	511	390	584	230	345	276	414
29	256	383	307	460	358	537	409	613	242	363	291	436
30	268	402	321	482	375	562	428	643	254	381	305	457
31	280	420	336	504	392	588	448	672	266	399	319	479
32	292	438	350	526	409	613	467	701	278	417	334	501

Limitations for Connections to Column Webs	
$B = 3^1/_2$ in. max	$B = 3^1/_2$ in. max
W14×43, limit $B \leq 3$ in. See item 3 in preceding discussion "Design Checks"	See item 3 in preceding discussion "Design Checks"

Notes:

1. Values shown assume 70-ksi electrodes. For 60-ksi electrodes, multiply tabular values by 0.857, or enter table with 1.17 times the required strength, R_u or R_a. For 80-ksi electrodes, multiply tabular values by 1.14, or enter table with 0.875 times the required strength.
2. Tabulated values are valid for stiffeners with minimum thickness of

$$t_{min} = \left(\frac{F_{y,\,beam}}{F_{y,\,stiffener}}\right) t_w$$

but not less than $2w$ for stiffeners with $F_y = 36$ ksi nor $1.5w$ for stiffeners with $F_y = 50$ ksi. In the above, t_w is the thickness of the unstiffened supported beam web and w is the nominal weld size.

3. Tabulated values may be limited by shear yielding of, or bearing on, the stiffener; refer to AISC *Specification* Sections J4.2 and J7, respectively.

ASD	LRFD
$\Omega = 2.00$	$\phi = 0.75$

Table 10-8 (continued)
Bolted/Welded Stiffened Seated Connections
Weld Available Strength, kips

L, in.	Width of Seat, W, in.											
	8				9							
	70-ksi Weld Size, in.				70-ksi Weld Size, in.							
	1/2		5/8		5/16		3/8		1/2		5/8	
	ASD	LRFD	ASD	LRFD	ASD	LRFD	ASD	LRFD	ASD	LRFD	ASD	LRFD
11	77.4	116	96.7	145	43.7	65.6	52.5	78.7	69.9	105	87.4	131
12	90.8	136	113	170	51.4	77.1	61.7	92.5	82.2	123	103	154
13	105	157	131	197	59.6	89.3	71.5	107	95.3	143	119	179
14	120	180	150	224	68.2	102	81.8	123	109	164	136	204
15	135	203	169	253	77.2	116	92.6	139	123	185	154	232
16	151	227	189	283	86.5	130	104	156	138	208	173	260
17	168	251	209	314	96.2	144	115	173	154	231	192	289
18	184	277	231	346	106	159	127	191	170	255	212	319
19	202	303	252	378	117	175	140	210	186	280	233	350
20	219	329	274	411	127	191	152	229	203	305	254	381
21	237	356	297	445	138	207	165	248	220	331	276	413
22	256	383	319	479	149	223	178	268	238	357	297	446
23	274	411	342	514	160	240	192	288	256	384	320	480
24	292	439	366	548	171	257	205	308	274	411	342	513
25	311	467	389	584	183	274	219	329	292	438	365	548
26	330	495	413	619	194	291	233	349	310	466	388	582
27	349	524	436	655	206	308	247	370	329	494	411	617
28	368	552	460	690	217	326	261	391	348	522	435	652
29	387	581	484	726	229	344	275	412	367	550	458	687
30	407	610	508	762	241	362	289	434	386	578	482	723
31	426	639	532	799	253	379	304	455	405	607	506	759
32	445	668	557	835	265	397	318	477	424	636	530	795

Limitations for Connections to Column Webs	
$B = 3^1/_2$ in. max	$B = 3^1/_2$ in. max
See item 3 in preceding discussion "Design Checks"	See item 3 in preceeding discussion "Design Checks"

Notes:

1. Values shown assume 70-ksi electrodes. For 60-ksi electrodes, multiply tabular values by 0.857, or enter table with 1.17 times the required strength, R_u or R_a. For 80-ksi electrodes, multiply tabular values by 1.14, or enter table with 0.875 times the required strength.
2. Tabulated values are valid for stiffeners with minimum thickness of

$$t_{min} = \left(\frac{F_{y,\,beam}}{F_{y,\,stiffener}}\right) t_w$$

but not less than $2w$ for stiffeners with $F_y = 36$ ksi nor $1.5w$ for stiffeners with $F_y = 50$ ksi. In the above, t_w is the thickness of the unstiffened supported beam web and w is the nominal weld size.

3. Tabulated values may be limited by shear yielding of, or bearing on, the stiffener; refer to AISC *Specification* Sections J4.2 and J7, respectively.

ASD	LRFD
$\Omega = 2.00$	$\phi = 0.75$

SINGLE-PLATE CONNECTIONS

A single-plate connection is made with a plate, as illustrated in Figure 10-11. The plate must be welded to the support on both sides of the plate and bolted to the supported member.

Design Checks

The available strength of a single-plate connection is determined from the applicable limit states for the bolts (see Part 7), welds (see Part 8), and connecting elements (see Part 9). In all cases, the available strength, ϕR_n or R_n/Ω, must equal or exceed the required strength, R_u or R_a, respectively.

Single-plate shear connections that satisfy the corresponding dimensional limitations can be designed using the simplified design procedure for the "conventional" configuration. Other single-plate shear connections can be designed using the procedure for the "extended" configuration, which is applicable to any configuration of single-plate shear connections, regardless of connection geometry.

Both the conventional and extended configurations permit the use of Group A or Group B bolts. The procedure is valid for bolts that are snug-tightened, pretensioned or slip-critical. In both the conventional and extended configuration, the design recommendations are equally applicable to plate and beam web material with $F_y = 36$ ksi or 50 ksi. In both cases, the weld between the single plate and the support should be sized as $(^5/_8)t_p$, which will develop the strength of either a 36-ksi or 50-ksi plate.

Conventional Configuration

The following method may be used when the dimensional and other limitations upon which it is based are satisfied. See Muir and Thornton (2011).

Dimensional Limitations

1. Only a single vertical row of bolts is permitted. The number of bolts in the connection, n, must be between 2 and 12.
2. The distance from the bolt line to the weld line, a, must be equal to or less than $3^1/_2$ in.

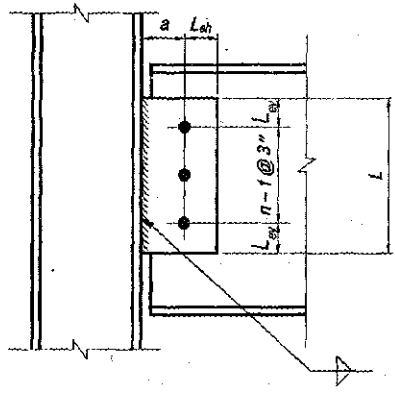

Fig. 10-11. Single-plate connection.

Table 10-9
Design Values for Conventional Single-Plate Shear Connections

n	Hole Type	e, in.	Maximum t_p or t_w in.
2 to 5	SSLT	$a/2$	None
	STD	$a/2$	$d/2 + 1/16$
6 to 12	SSLT	$a/2$	$d/2 + 1/16$
	STD	a	$d/2 - 1/16$

3. Standard holes (STD) or short-slotted holes transverse to the direction of the supported member reaction (SSLT) are permitted to be used as noted in Table 10-9.
4. The vertical edge distance, L_{ev}, must satisfy AISC *Specification* Table J3.4 requirements. The horizontal edge distance, L_{eh}, should be greater than or equal to $2d$, where d is the bolt diameter.
5. Either the plate thickness, t_p, or the beam web thickness, t_w, must satisfy the maximum thickness requirement given in Table 10-9.

Design Checks

1. The bolts and plate must be checked for required shear with an eccentricity equal to e, as given in Table 10-9.
2. Plate buckling will not control for the conventional configuration.

Extended Configuration

The following method can be used when the dimensional and other limitations of the conventional method are not satisfied. This procedure can be used to determine the strength of single-plate shear connections with multiple vertical rows or in the extended configuration, as shown in Figure 10-12.

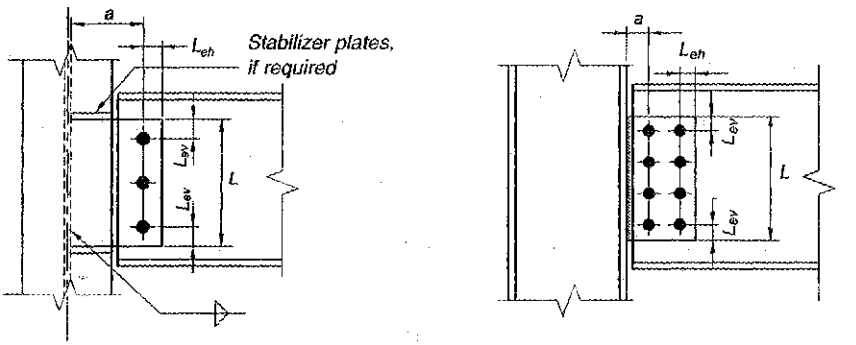

Fig. 10-12. Single-plate connection—Extended Configuration.

Dimensional Limitations

1. The number of bolts, n, is not limited.
2. The distance from the weld line to the bolt line closest to the support, a, is not limited.
3. The use of holes must satisfy AISC *Specification* Section J3.2 requirements.
4. The horizontal and vertical edge distances, L_{eh} and L_{ev}, must satisfy AISC *Specification* Table J3.4 requirements.

Design Checks

1. Determine the bolt group required for bolt shear and bolt bearing with eccentricity e, where e is defined as the distance from the support to the centroid of the bolt group. Exception: Alternative considerations of the design eccentricity are acceptable when justified by rational analysis. For example, see Sherman and Ghorbanpoor (2002).
2. Determine the maximum plate thickness permitted such that the plate moment strength does not exceed the moment strength of the bolt group in shear, as follows:

$$t_{max} = \frac{6M_{max}}{F_y d^2} \tag{10-3}$$

where

$$M_{max} = \frac{F_v}{0.90}(A_b C') \tag{10-4}$$

$\frac{F_v}{0.90}$ = shear strength of an individual bolt from AISC *Specification* Table J3.2, ksi, divided by a factor of 0.90 to remove the 10% reduction for uneven force distribution in end-loaded bolt groups (Kulak, 2002). The joint in question is not end-loaded.

A_b = area of an individual bolt, in.^{2}

C' = coefficient from Part 7 for the moment-only case (instantaneous center of rotation at the centroid of the bolt group)

F_y = specified minimum yield stress of plate, ksi

d = depth of plate, in.

The foregoing check is made at the nominal strength level, since the check is to ensure ductility, not strength.

Exceptions:

a. For a single vertical row of bolts only, the foregoing criterion need not be satisfied if either the beam web or the plate satisfies $t \le d_b/2 + {}^1/_{16}$ and both satisfy $L_{eh} \ge 2d_b$.
b. For a double vertical row of bolts only, the foregoing criterion need not be satisfied if both the beam web and the plate satisfy $t \le d_b/2 + {}^1/_{16}$ and $L_{eh} \ge 2d_b$.

3. Check the plate for the limit states of shear yielding, shear rupture, and block shear rupture.
4. Check the plate for the limit states of shear yielding, shear buckling, and yielding due to flexure as follows:

$$\left(\frac{V_r}{V_c}\right)^2 + \left(\frac{M_r}{M_c}\right)^2 \le 1.0 \tag{10-5}$$

where

A_g = gross cross-sectional area of the shear plate, in.^{2}

$M_c = \phi_b M_n$ (LRFD) or M_n/Ω_b (ASD), kip-in.

$M_n = F_y Z_{pl}$, kip-in.

$M_r = M_u$ (LRFD) or M_a (ASD)

$= V_r e$, kip-in.

$V_c = \phi_v V_n$ (LRFD) or V_n/Ω_v, (ASD), kips

$V_n = 0.6 F_y A_g$, kips

$V_r = V_u$ (LRFD) or V_a (ASD), kips

Z_{pl} = plastic section modulus of the shear plate, in.^{3}

e = distance from support to centroid of bolt group, in.

$\phi_b = 0.90$

$\phi_v = 1.00$

$\Omega_b = 1.67$

$\Omega_v = 1.50$

5. Check the plate for the limit state of buckling using the double-coped beam procedure given in Part 9.
6. Ensure that the supported beam is braced at points of support.

The design procedure for extended single-plate shear connections permits the column to be designed for an axial force without eccentricity. In some cases, economy may be gained by considering alternative design procedures that allow the transfer of some moment into the column. A percentage of the column's weak-axis flexural strength, such as 5%, may be used as a mechanism to reduce the required eccentricity on the bolt group, provided that this moment is also considered in the design of the column. Larger percentages of the column's weak-axis flexural strength may be justified at the roof level.

Short-slotted holes can be used with the extended configuration with the bolts designed as bearing. Any slip of the bolts is a serviceability issue and does not affect the connection strength (Muir and Hewitt, 2009).

Requirement for Stabilizer Plates

Lateral displacement of beams with extended single-plate connections is resisted by the torsional strength of the plate and beam in the connection region. Thornton and Fortney (2011) show that stabilizing plates are not required when the required shear strength, R_u or R_a, respectively, is equal to or less than the available strength to resist lateral displacement, ϕR_n or R_n/Ω, where

$$R_n = 1{,}500\pi \frac{L t_p^3}{a^2} \tag{10-6}$$

$$\phi = 0.90 \qquad \Omega = 1.67$$

where

a = distance from the support to the first line of bolts, in.

L = depth of plate, in.

t_p = thickness of plate, in.

When the required shear strength exceeds the available strength to resist lateral displacement, stabilizer plates are required. These plates can be of nominal size and are connected

to the single plate and column flanges with minimum size fillet welds as shown in Figure 10-12. They need not be connected to the column web.

The torsional strength of single-plate shear connections is the sum of two components: the lateral shear strength of the single plate and the lateral bending strength of the beam in the connection region. The first component always is present. The second component occurs as bending of the beam flange in contact with the slab, and should only be considered when a slab is present. Thornton and Fortney (2011) provide the sum of these components as follows:

LRFD	ASD
$M_{tu} \le \left[\phi_v\left(0.6F_{yp}\right) - \frac{R_u}{Lt_p}\right]\frac{Lt_p^2}{2} + \frac{2R_u^2\left(t_w + t_p\right)b_f}{\left(\phi_b F_{yb}\right)L_s t_w^2}$ (10-7a)	$M_{ta} \le \left(\frac{0.6F_{yp}}{\Omega_v} - \frac{R_a}{Lt_p}\right)\frac{Lt_p^2}{2} + \frac{\Omega_b 2R_a^2\left(t_w + t_p\right)b_f}{F_{yb}L_s t_w^2}$ (10-7b)

where

F_{yp} = specified minimum yield stress of the plate, ksi

$$M_{tu} = R_u\left(\frac{t_w + t_p}{2}\right) \text{ (LRFD)} \quad (10\text{-}8a)$$

$$M_{ta} = R_a\left(\frac{t_w + t_p}{2}\right) \text{ (ASD)} \quad (10\text{-}8b)$$

L_s = span length of beam, in.
R_a = required strength (ASD), kips
R_u = required strength (LRFD), kips
b_f = width of beam flange, in.
t_w = thickness of beam web, in.
ϕ_b = 0.90
ϕ_v = 1.00
Ω_b = 1.67
Ω_v = 1.50

Recommended Plate Length

To provide for stability during erection, it is recommended that the minimum plate length be one-half the T-dimension of the beam to be supported. The maximum length of the plate must be compatible with the T-dimension of an uncoped beam and the remaining web depth, exclusive of fillets, of a coped beam. Note that the plate may encroach upon the fillet(s) as given in Figure 10-3.

Shop and Field Practices

Conventional and extended single-plate connections may be made to the webs of supporting girders and to the flanges of supporting columns. Extended single-plate connections are suitable for connections to the webs of supporting columns when the bolt line is located a sufficient distance beyond the column flanges.

With the plate shop-attached to the support, side erection of the beam is permitted. Play in the open holes usually compensates for mill variation in column flange supports and other field adjustments.

DESIGN TABLE DISCUSSION (TABLE 10-10)

Table 10-10. Single-Plate Connections

Table 10-10 is a design aid for single-plate connections welded to the support and bolted to the supported beam. Available strengths are tabulated in Table 10-10a for plate material with $F_y = 36$ ksi and Table 10-10b for plate material with $F_y = 50$ ksi.

Tabulated bolt and plate available strengths consider the limit states of bolt shear, bolt bearing on the plate, shear yielding of the plate, shear rupture of the plate, block shear rupture of the plate, and weld shear. Values are tabulated for two through twelve rows of $^3/_4$-in.-, $^7/_8$-in.-, 1-in.- and $1^1/_8$-in.-diameter Group A and Group B bolts at 3-in. spacing. For calculation purposes, plate edge distance, L_{ev}, is in accordance with AISC *Specification* Section J3.10 and Table J3.4. End distance, L_{eh}, is provided as 2 times the diameter of the bolt, to match tested connections. Weld sizes are tabulated equal to $(^5/_8)t_p$.

While the tabular values are based on $a = 3$ in., they may conservatively be used when the distance from the support to the bolt line, a, is between $2^1/_2$ in. and 3 in. The tabulated values are valid for laterally supported beams in steel and composite construction, all types of loading, snug-tightened or pretensioned bolts, and for supported and supporting members of all grades of steel.

Table 10-10a

Single-Plate Connections

3/4-in.-diameter bolts

Plate F_y = 36 ksi

Bolt, Weld and Single-Plate Available Strengths, kips

n	Bolt Group	Thread Cond.	Hole Type	Plate Thickness, in. 1/4 ASD	1/4 LRFD	5/16 ASD	5/16 LRFD	3/8 ASD	3/8 LRFD	7/16 ASD	7/16 LRFD	1/2 ASD	1/2 LRFD	9/16 ASD	9/16 LRFD
12 (L = 35 1/2)	Group A	N	STD	100	150	125	188	—	—	—	—	—	—	—	—
			SSLT	99.5	149	124	187	138	208	138	208	—	—	—	—
		X	STD	100	150	125	188	—	—	—	—	—	—	—	—
			SSLT	99.5	149	124	187	149	224	174	261	—	—	—	—
	Group B	N	STD	100	150	125	188	—	—	—	—	—	—	—	—
			SSLT	99.5	149	124	187	149	224	174	261	—	—	—	—
		X	STD	100	150	125	188	—	—	—	—	—	—	—	—
			SSLT	99.5	149	124	187	149	224	174	261	—	—	—	—
11 (L = 32 1/2)	Group A	N	STD	92.1	138	115	173	—	—	—	—	—	—	—	—
			SSLT	91.4	137	114	171	126	190	126	190	—	—	—	—
		X	STD	92.1	138	115	173	—	—	—	—	—	—	—	—
			SSLT	91.4	137	114	171	137	206	159	239	—	—	—	—
	Group B	N	STD	92.1	138	115	173	—	—	—	—	—	—	—	—
			SSLT	91.4	137	114	171	137	206	159	239	—	—	—	—
		X	STD	92.1	138	115	173	—	—	—	—	—	—	—	—
			SSLT	91.4	137	114	171	137	206	160	240	—	—	—	—
10 (L = 29 1/2)	Group A	N	STD	84.0	126	105	157	—	—	—	—	—	—	—	—
			SSLT	83.3	125	104	156	115	173	115	173	—	—	—	—
		X	STD	84.0	126	105	157	—	—	—	—	—	—	—	—
			SSLT	83.3	125	104	156	125	187	145	217	—	—	—	—
	Group B	N	STD	84.0	126	105	157	—	—	—	—	—	—	—	—
			SSLT	83.3	125	104	156	125	187	145	217	—	—	—	—
		X	STD	84.0	126	105	157	—	—	—	—	—	—	—	—
			SSLT	83.3	125	104	156	125	187	146	219	—	—	—	—
9 (L = 26 1/2)	Group A	N	STD	75.9	114	94.8	142	—	—	—	—	—	—	—	—
			SSLT	75.2	113	94.0	141	103	155	103	155	—	—	—	—
		X	STD	75.9	114	94.8	142	—	—	—	—	—	—	—	—
			SSLT	75.2	113	94.0	141	113	169	130	194	—	—	—	—
	Group B	N	STD	75.9	114	94.8	142	—	—	—	—	—	—	—	—
			SSLT	75.2	113	94.0	141	113	169	130	194	—	—	—	—
		X	STD	75.9	114	94.8	142	—	—	—	—	—	—	—	—
			SSLT	75.2	113	94.0	141	113	169	132	197	—	—	—	—
Weld Size				3/16		1/4		1/4		5/16		5/16		3/8	

STD = Standard holes

SSLT = Short-slotted holes transverse to direction of load

N = Threads included

X = Threads excluded

— Indicates that the plate thickness is greater than the maximum given in Table 10-9.

Table 10-10a (continued)

Plate $F_y = 36$ ksi

Single-Plate Connections

Bolt, Weld and Single-Plate Available Strengths, kips

3/4-in.-diameter bolts

n	Bolt Group	Thread Cond.	Hole Type	Plate Thickness, in. 1/4 ASD	1/4 LRFD	5/16 ASD	5/16 LRFD	3/8 ASD	3/8 LRFD	7/16 ASD	7/16 LRFD	1/2 ASD	1/2 LRFD	9/16 ASD	9/16 LRFD
8 ($L = 23^1/_2$)	Group A	N	STD	67.8	102	84.7	127	—	—	—	—	—	—	—	—
			SSLT	67.1	101	83.9	126	90.8	137	90.8	137	—	—	—	—
		X	STD	67.8	102	84.7	127	—	—	—	—	—	—	—	—
			SSLT	67.1	101	83.9	126	101	151	114	172	—	—	—	—
	Group B	N	STD	67.8	102	84.7	127	—	—	—	—	—	—	—	—
			SSLT	67.1	101	83.9	126	101	151	114	172	—	—	—	—
		X	STD	67.8	102	84.7	127	—	—	—	—	—	—	—	—
			SSLT	67.1	101	83.9	126	101	151	117	176	—	—	—	—
7 ($L = 20^1/_2$)	Group A	N	STD	59.7	89.5	72.1	108	—	—	—	—	—	—	—	—
			SSLT	59.0	88.5	73.7	111	78.7	118	78.7	118	—	—	—	—
		X	STD	59.7	89.5	74.6	112	—	—	—	—	—	—	—	—
			SSLT	59.0	88.5	73.7	111	88.5	133	99.2	149	—	—	—	—
	Group B	N	STD	59.7	89.5	74.6	112	—	—	—	—	—	—	—	—
			SSLT	59.0	88.5	73.7	111	88.5	133	99.2	149	—	—	—	—
		X	STD	59.7	89.5	74.6	112	—	—	—	—	—	—	—	—
			SSLT	59.0	88.5	73.7	111	88.5	133	103	155	—	—	—	—
6 ($L = 17^1/_2$)	Group A	N	STD	51.6	77.4	59.3	89.1	—	—	—	—	—	—	—	—
			SSLT	50.9	76.3	63.6	95.4	66.5	100	66.5	100	—	—	—	—
		X	STD	51.6	77.4	64.5	96.7	—	—	—	—	—	—	—	—
			SSLT	50.9	76.3	63.6	95.4	76.3	115	83.8	126	—	—	—	—
	Group B	N	STD	51.6	77.4	64.5	96.7	—	—	—	—	—	—	—	—
			SSLT	50.9	76.3	63.6	95.4	76.3	115	83.8	126	—	—	—	—
		X	STD	51.6	77.4	64.5	96.7	—	—	—	—	—	—	—	—
			SSLT	50.9	76.3	63.6	95.4	76.3	115	89.1	134	—	—	—	—
5 ($L = 14^1/_2$)	Group A	N	STD	43.5	65.2	54.1	81.3	54.1	81.3	54.1	81.3	—	—	—	—
			SSLT	42.8	64.2	53.5	80.2	54.1	81.3	54.1	81.3	54.1	81.3	54.1	81.3
		X	STD	43.5	65.2	54.3	81.5	65.2	97.8	68.1	102	—	—	—	—
			SSLT	42.8	64.2	53.5	80.2	64.2	96.3	68.1	102	68.1	102	68.1	102
	Group B	N	STD	43.5	65.2	54.3	81.5	65.2	97.8	68.1	102	—	—	—	—
			SSLT	42.8	64.2	53.5	80.2	64.2	96.3	68.1	102	68.1	102	68.1	102
		X	STD	43.5	65.2	54.3	81.5	65.2	97.8	76.1	114	—	—	—	—
			SSLT	42.8	64.2	53.5	80.2	64.2	96.3	74.9	112	84.5	126	84.5	126
Weld Size				3/16		1/4		1/4		5/16		5/16		3/8	

STD = Standard holes
SSLT = Short-slotted holes transverse to direction of load
— Indicates that the plate thickness is greater than the maximum given in Table 10-9.

N = Threads included
X = Threads excluded

Table 10-10a (continued)

3/4-in.-diameter bolts — Single-Plate Connections — Plate F_y = 36 ksi

Bolt, Weld and Single-Plate Available Strengths, kips

n	Bolt Group	Thread Cond.	Hole Type	Plate Thickness, in. 1/4 ASD	1/4 LRFD	5/16 ASD	5/16 LRFD	3/8 ASD	3/8 LRFD	7/16 ASD	7/16 LRFD	1/2 ASD	1/2 LRFD	9/16 ASD	9/16 LRFD
4 (L = 11 1/2)	Group A	N	STD	34.8	52.2	41.5	62.5	41.5	62.5	41.5	62.5	—	—	—	—
			SSLT	34.7	52.0	41.5	62.5	41.5	62.5	41.5	62.5	41.5	62.5	41.5	62.5
		X	STD	34.8	52.2	43.5	65.3	52.2	78.3	52.4	78.5	—	—	—	—
			SSLT	34.7	52.0	43.4	65.1	52.0	78.1	52.4	78.5	52.4	78.5	52.4	78.5
	Group B	N	STD	34.8	52.2	43.5	65.3	52.2	78.3	52.4	78.5	—	—	—	—
			SSLT	34.7	52.0	43.4	65.1	52.0	78.1	52.4	78.5	52.4	78.5	52.4	78.5
		X	STD	34.8	52.2	43.5	65.3	52.2	78.3	60.9	91.4	—	—	—	—
			SSLT	34.7	52.0	43.4	65.1	52.0	78.1	60.7	91.1	64.9	97.0	64.9	97.0
3 (L = 8 1/2)	Group A	N	STD	25.6	38.3	28.8	43.4	28.8	43.4	28.8	43.4	—	—	—	—
			SSLT	25.6	38.3	28.8	43.4	28.8	43.4	28.8	43.4	28.8	43.4	28.8	43.4
		X	STD	25.6	38.3	31.9	47.9	36.3	54.5	36.3	54.5	—	—	—	—
			SSLT	25.6	38.3	31.9	47.9	36.3	54.5	36.3	54.5	36.3	54.5	36.3	54.5
	Group B	N	STD	25.6	38.3	31.9	47.9	36.3	54.5	36.3	54.5	—	—	—	—
			SSLT	25.6	38.3	31.9	47.9	36.3	54.5	36.3	54.5	36.3	54.5	36.3	54.5
		X	STD	25.6	38.3	31.9	47.9	38.3	57.5	44.7	67.1	—	—	—	—
			SSLT	25.6	38.3	31.9	47.9	38.3	57.5	44.7	67.1	45.1	67.3	45.1	67.3
2 (L = 5 1/2)	Group A	N	STD	16.3	24.5	16.5	24.8	16.5	24.8	16.5	24.8	—	—	—	—
			SSLT	16.3	24.5	16.5	24.8	16.5	24.8	16.5	24.8	16.5	24.8	16.5	24.8
		X	STD	16.3	24.5	20.4	30.6	20.8	31.2	20.8	31.2	—	—	—	—
			SSLT	16.3	24.5	20.4	30.6	20.8	31.2	20.8	31.2	20.8	31.2	20.8	31.2
	Group B	N	STD	16.3	24.5	20.4	30.6	20.8	31.2	20.8	31.2	—	—	—	—
			SSLT	16.3	24.5	20.4	30.6	20.8	31.2	20.8	31.2	20.8	31.2	20.8	31.2
		X	STD	16.3	24.5	20.4	30.6	24.5	36.7	25.8	38.5	—	—	—	—
			SSLT	16.3	24.5	20.4	30.6	24.5	36.7	25.8	38.5	25.8	38.5	25.8	38.5
Weld Size				3/16		1/4		1/4		5/16		5/16		3/8	

STD = Standard holes
SSLT = Short-slotted holes transverse to direction of load
N = Threads included
X = Threads excluded
— Indicates that the plate thickness is greater than the maximum given in Table 10-9.

Table 10-10a (continued)

Single-Plate Connections

Plate
F_y = 36 ksi

Bolt, Weld and Single-Plate Available Strengths, kips

7/8-in.-diameter bolts

n	Bolt Group	Thread Cond.	Hole Type	Plate Thickness, in. 1/4 ASD	1/4 LRFD	5/16 ASD	5/16 LRFD	3/8 ASD	3/8 LRFD	7/16 ASD	7/16 LRFD	1/2 ASD	1/2 LRFD	9/16 ASD	9/16 LRFD
12 (L = 36)	Group A	N	STD	102	153	128	192	153	230	—	—	—	—	—	—
			SSLT	102	152	127	190	152	228	178	267	188	282	—	—
		X	STD	102	153	128	192	153	230	—	—	—	—	—	—
			SSLT	102	152	127	190	152	228	178	267	203	305	—	—
	Group B	N	STD	102	153	128	192	153	230	—	—	—	—	—	—
			SSLT	102	152	127	190	152	228	178	267	203	305	—	—
		X	STD	102	153	128	192	153	230	—	—	—	—	—	—
			SSLT	102	152	127	190	152	228	178	267	203	305	—	—
11 (L = 33)	Group A	N	STD	94.1	141	118	176	141	212	—	—	—	—	—	—
			SSLT	93.4	140	117	175	140	210	164	245	172	258	—	—
		X	STD	94.1	141	118	176	141	212	—	—	—	—	—	—
			SSLT	93.4	140	117	175	140	210	164	245	187	280	—	—
	Group B	N	STD	94.1	141	118	176	141	212	—	—	—	—	—	—
			SSLT	93.4	140	117	175	140	210	164	245	187	280	—	—
		X	STD	94.1	141	118	176	141	212	—	—	—	—	—	—
			SSLT	93.4	140	117	175	140	210	164	245	187	280	—	—
10 (L = 30)	Group A	N	STD	86.0	129	108	161	129	194	—	—	—	—	—	—
			SSLT	85.3	128	107	160	128	192	149	224	156	234	—	—
		X	STD	86.0	129	108	161	129	194	—	—	—	—	—	—
			SSLT	85.3	128	107	160	128	192	149	224	171	256	—	—
	Group B	N	STD	86.0	129	108	161	129	194	—	—	—	—	—	—
			SSLT	85.3	128	107	160	128	192	149	224	171	256	—	—
		X	STD	86.0	129	108	161	129	194	—	—	—	—	—	—
			SSLT	85.3	128	107	160	128	192	149	224	171	256	—	—
9 (L = 27)	Group A	N	STD	77.9	117	97.4	146	117	175	—	—	—	—	—	—
			SSLT	77.2	116	96.5	145	116	174	135	203	140	210	—	—
		X	STD	77.9	117	97.4	146	117	175	—	—	—	—	—	—
			SSLT	77.2	116	96.5	145	116	174	135	203	154	232	—	—
	Group B	N	STD	77.9	117	97.4	146	117	175	—	—	—	—	—	—
			SSLT	77.2	116	96.5	145	116	174	135	203	154	232	—	—
		X	STD	77.9	117	97.4	146	117	175	—	—	—	—	—	—
			SSLT	77.2	116	96.5	145	116	174	135	203	154	232	—	—
Weld Size				3/16		1/4		1/4		5/16		5/16		3/8	

STD = Standard holes
SSLT = Short-slotted holes transverse to direction of load
— Indicates that the plate thickness is greater than the maximum given in Table 10-9.

N = Threads included
X = Threads excluded

Table 10-10a (continued)

7/8-in.-diameter bolts — Single-Plate Connections — Plate F_y = 36 ksi

Bolt, Weld and Single-Plate Available Strengths, kips

n	Bolt Group	Thread Cond.	Hole Type	Plate Thickness, in.											
				1/4		5/16		3/8		7/16		1/2		9/16	
				ASD	LRFD	ASD	LRFD	ASD	LRFD	ASD	LRFD	ASD	LRFD	ASD	LRFD
8 (L = 24)	Group A	N	STD	69.6	104	87.0	131	104	157	—	—	—	—	—	—
			SSLT	69.1	104	86.4	130	104	156	121	181	124	185	—	—
		X	STD	69.6	104	87.0	131	104	157	—	—	—	—	—	—
			SSLT	69.1	104	86.4	130	104	156	121	181	138	207	—	—
	Group B	N	STD	69.6	104	87.0	131	104	157	—	—	—	—	—	—
			SSLT	69.1	104	86.4	130	104	156	121	181	138	207	—	—
		X	STD	69.6	104	87.0	131	104	157	—	—	—	—	—	—
			SSLT	69.1	104	86.4	130	104	156	121	181	138	207	—	—
7 (L = 21)	Group A	N	STD	60.9	91.4	76.1	114	91.4	137	—	—	—	—	—	—
			SSLT	60.9	91.4	76.1	114	91.4	137	107	160	107	161	—	—
		X	STD	60.9	91.4	76.1	114	91.4	137	—	—	—	—	—	—
			SSLT	60.9	91.4	76.1	114	91.4	137	107	160	122	183	—	—
	Group B	N	STD	60.9	91.4	76.1	114	91.4	137	—	—	—	—	—	—
			SSLT	60.9	91.4	76.1	114	91.4	137	107	160	122	183	—	—
		X	STD	60.9	91.4	76.1	114	91.4	137	—	—	—	—	—	—
			SSLT	60.9	91.4	76.1	114	91.4	137	107	160	122	183	—	—
6 (L = 18)	Group A	N	STD	52.2	78.3	65.3	97.9	78.3	117	—	—	—	—	—	—
			SSLT	52.2	78.3	65.3	97.9	78.3	117	90.5	136	90.5	136	—	—
		X	STD	52.2	78.3	65.3	97.9	78.3	117	—	—	—	—	—	—
			SSLT	52.2	78.3	65.3	97.9	78.3	117	91.4	137	104	157	—	—
	Group B	N	STD	52.2	78.3	65.3	97.9	78.3	117	—	—	—	—	—	—
			SSLT	52.2	78.3	65.3	97.9	78.3	117	91.4	137	104	157	—	—
		X	STD	52.2	78.3	65.3	97.9	78.3	117	—	—	—	—	—	—
			SSLT	52.2	78.3	65.3	97.9	78.3	117	91.4	137	104	157	—	—
5 (L = 15)	Group A	N	STD	43.5	65.3	54.4	81.6	65.3	97.9	73.6	110	73.6	110	—	—
			SSLT	43.5	65.3	54.4	81.6	65.3	97.9	73.6	110	73.6	110	73.6	110
		X	STD	43.5	65.3	54.4	81.6	65.3	97.9	76.1	114	87.0	131	—	—
			SSLT	43.5	65.3	54.4	81.6	65.3	97.9	76.1	114	87.0	131	92.7	139
	Group B	N	STD	43.5	65.3	54.4	81.6	65.3	97.9	76.1	114	87.0	131	—	—
			SSLT	43.5	65.3	54.4	81.6	65.3	97.9	76.1	114	87.0	131	92.7	139
		X	STD	43.5	65.3	54.4	81.6	65.3	97.9	76.1	114	87.0	131	—	—
			SSLT	43.5	65.3	54.4	81.6	65.3	97.9	76.1	114	87.0	131	97.9	147
Weld Size				3/16		1/4		1/4		5/16		5/16		3/8	

STD = Standard holes
SSLT = Short-slotted holes transverse to direction of load
N = Threads included
X = Threads excluded
— Indicates that the plate thickness is greater than the maximum given in Table 10-9.

Table 10-10a (continued)

Single-Plate Connections

Plate $F_y = 36$ ksi

Bolt, Weld and Single-Plate Available Strengths, kips

$^7/_8$-in.-diameter bolts

n	Bolt Group	Thread Cond.	Hole Type	Plate Thickness, in.											
				$^1/_4$		$^5/_{16}$		$^3/_8$		$^7/_{16}$		$^1/_2$		$^9/_{16}$	
				ASD	LRFD	ASD	LRFD	ASD	LRFD	ASD	LRFD	ASD	LRFD	ASD	LRFD
4 ($L = 12$)	Group A	N	STD	34.8	52.2	43.5	65.3	52.2	78.3	56.5	84.8	56.5	84.8	—	—
			SSLT	34.8	52.2	43.5	65.3	52.2	78.3	56.5	84.8	56.5	84.8	56.5	84.8
		X	STD	34.8	52.2	43.5	65.3	52.2	78.3	60.9	91.4	69.6	104	—	—
			SSLT	34.8	52.2	43.5	65.3	52.2	78.3	60.9	91.4	69.6	104	71.2	107
	Group B	N	STD	34.8	52.2	43.5	65.3	52.2	78.3	60.9	91.4	69.6	104	—	—
			SSLT	34.8	52.2	43.5	65.3	52.2	78.3	60.9	91.4	69.6	104	71.2	107
		X	STD	34.8	52.2	43.5	65.3	52.2	78.3	60.9	91.4	69.6	104	—	—
			SSLT	34.8	52.2	43.5	65.3	52.2	78.3	60.9	91.4	69.6	104	78.3	117
3 ($L = 9$)	Group A	N	STD	26.1	39.2	32.6	48.9	39.2	58.7	39.2	58.9	39.2	58.9	—	—
			SSLT	26.1	39.2	32.6	48.9	39.2	58.7	39.2	58.9	39.2	58.9	39.2	58.9
		X	STD	26.1	39.2	32.6	48.9	39.2	58.7	45.7	68.5	49.4	74.4	—	—
			SSLT	26.1	39.2	32.6	48.9	39.2	58.7	45.7	68.5	49.4	74.4	49.4	74.4
	Group B	N	STD	26.1	39.2	32.6	48.9	39.2	58.7	45.7	68.5	49.4	74.4	—	—
			SSLT	26.1	39.2	32.6	48.9	39.2	58.7	45.7	68.5	49.4	74.4	49.4	74.4
		X	STD	26.1	39.2	32.6	48.9	39.2	58.7	45.7	68.5	52.2	78.3	—	—
			SSLT	26.1	39.2	32.6	48.9	39.2	58.7	45.7	68.5	52.2	78.3	58.7	88.1
2 ($L = 6$)	Group A	N	STD	17.4	26.1	21.8	32.6	22.4	33.7	22.4	33.7	22.4	33.7	—	—
			SSLT	17.4	26.1	21.8	32.6	22.4	33.7	22.4	33.7	22.4	33.7	22.4	33.7
		X	STD	17.4	26.1	21.8	32.6	26.1	39.2	28.3	42.5	28.3	42.5	—	—
			SSLT	17.4	26.1	21.8	32.6	26.1	39.2	28.3	42.5	28.3	42.5	28.3	42.5
	Group B	N	STD	17.4	26.1	21.8	32.6	26.1	39.2	28.3	42.5	28.3	42.5	—	—
			SSLT	17.4	26.1	21.8	32.6	26.1	39.2	28.3	42.5	28.3	42.5	28.3	42.5
		X	STD	17.4	26.1	21.8	32.6	26.1	39.2	30.5	45.7	34.8	52.2	—	—
			SSLT	17.4	26.1	21.8	32.6	26.1	39.2	30.5	45.7	34.8	52.2	34.9	52.5
Weld Size				$^3/_{16}$		$^1/_4$		$^1/_4$		$^5/_{16}$		$^5/_{16}$		$^3/_8$	

STD = Standard holes
SSLT = Short-slotted holes transverse to direction of load
N = Threads included
X = Threads excluded
— Indicates that the plate thickness is greater than the maximum given in Table 10-9.

Table 10-10a
Single-Plate Connections
1-in.-diameter bolts — **Plate F_y = 36 ksi**

Bolt, Weld and Single-Plate Available Strengths, kips

n	Bolt Group	Thread Cond.	Hole Type	Plate Thickness, in. 1/4 ASD	1/4 LRFD	5/16 ASD	5/16 LRFD	3/8 ASD	3/8 LRFD	7/16 ASD	7/16 LRFD	1/2 ASD	1/2 LRFD	9/16 ASD	9/16 LRFD
12 (L = 36 1/2)	Group A	N	STD	100	150	125	188	150	225	175	263	—	—	—	—
			SSLT	100	150	125	188	150	225	175	263	200	300	225	338
		X	STD	100	150	125	188	150	225	175	263	—	—	—	—
			SSLT	100	150	125	188	150	225	175	263	200	300	225	338
	Group B	N	STD	100	150	125	188	150	225	175	263	—	—	—	—
			SSLT	100	150	125	188	150	225	175	263	200	300	225	338
		X	STD	100	150	125	188	150	225	175	263	—	—	—	—
			SSLT	100	150	125	188	150	225	175	263	200	300	225	338
11 (L = 33 1/2)	Group A	N	STD	91.9	138	115	172	138	207	161	241	—	—	—	—
			SSLT	91.9	138	115	172	138	207	161	241	184	276	207	310
		X	STD	91.9	138	115	172	138	207	161	241	—	—	—	—
			SSLT	91.9	138	115	172	138	207	161	241	184	276	207	310
	Group B	N	STD	91.9	138	115	172	138	207	161	241	—	—	—	—
			SSLT	91.9	138	115	172	138	207	161	241	184	276	207	310
		X	STD	91.9	138	115	172	138	207	161	241	—	—	—	—
			SSLT	91.9	138	115	172	138	207	161	241	184	276	207	310
10 (L = 30 1/2)	Group A	N	STD	83.7	126	105	157	126	188	147	220	—	—	—	—
			SSLT	83.7	126	105	157	126	188	147	220	167	251	188	283
		X	STD	83.7	126	105	157	126	188	147	220	—	—	—	—
			SSLT	83.7	126	105	157	126	188	147	220	167	251	188	283
	Group B	N	STD	83.7	126	105	157	126	188	147	220	—	—	—	—
			SSLT	83.7	126	105	157	126	188	147	220	167	251	188	283
		X	STD	83.7	126	105	157	126	188	147	220	—	—	—	—
			SSLT	83.7	126	105	157	126	188	147	220	167	251	188	283
9 (L = 27 1/2)	Group A	N	STD	75.6	113	94.5	142	113	170	132	198	—	—	—	—
			SSLT	75.6	113	94.5	142	113	170	132	198	151	227	170	255
		X	STD	75.6	113	94.5	142	113	170	132	198	—	—	—	—
			SSLT	75.6	113	94.5	142	113	170	132	198	151	227	170	255
	Group B	N	STD	75.6	113	94.5	142	113	170	132	198	—	—	—	—
			SSLT	75.6	113	94.5	142	113	170	132	198	151	227	170	255
		X	STD	75.6	113	94.5	142	113	170	132	198	—	—	—	—
			SSLT	75.6	113	94.5	142	113	170	132	198	151	227	170	255
Weld Size				3/16		1/4		1/4		5/16		5/16		3/8	

STD = Standard holes
SSLT = Short-slotted holes transverse to direction of load
N = Threads included
X = Threads excluded
— Indicates that the plate thickness is greater than the maximum given in Table 10-9.

Table 10-10a (continued)

Single-Plate Connections

Plate $F_y = 36$ ksi

Bolt, Weld and Single-Plate Available Strengths, kips

1-in.-diameter bolts

n	Bolt Group	Thread Cond.	Hole Type	Plate Thickness, in. 1/4 ASD	1/4 LRFD	5/16 ASD	5/16 LRFD	3/8 ASD	3/8 LRFD	7/16 ASD	7/16 LRFD	1/2 ASD	1/2 LRFD	9/16 ASD	9/16 LRFD
8 (L = 24 1/2)	Group A	N	STD	67.4	101	84.3	126	101	152	118	177	—	—	—	—
			SSLT	67.4	101	84.3	126	101	152	118	177	135	202	152	228
		X	STD	67.4	101	84.3	126	101	152	118	177	—	—	—	—
			SSLT	67.4	101	84.3	126	101	152	118	177	135	202	152	228
	Group B	N	STD	67.4	101	84.3	126	101	152	118	177	—	—	—	—
			SSLT	67.4	101	84.3	126	101	152	118	177	135	202	152	228
		X	STD	67.4	101	84.3	126	101	152	118	177	—	—	—	—
			SSLT	67.4	101	84.3	126	101	152	118	177	135	202	152	228
7 (L = 21 1/2)	Group A	N	STD	59.3	88.9	74.1	111	88.9	133	104	156	—	—	—	—
			SSLT	59.3	88.9	74.1	111	88.9	133	104	156	119	178	133	200
		X	STD	59.3	88.9	74.1	111	88.9	133	104	156	—	—	—	—
			SSLT	59.3	88.9	74.1	111	88.9	133	104	156	119	178	133	200
	Group B	N	STD	59.3	88.9	74.1	111	88.9	133	104	156	—	—	—	—
			SSLT	59.3	88.9	74.1	111	88.9	133	104	156	119	178	133	200
		X	STD	59.3	88.9	74.1	111	88.9	133	104	156	—	—	—	—
			SSLT	59.3	88.9	74.1	111	88.9	133	104	156	119	178	133	200
6 (L = 18 1/2)	Group A	N	STD	51.1	76.7	63.9	95.8	76.7	115	89.4	134	—	—	—	—
			SSLT	51.1	76.7	63.9	95.8	76.7	115	89.4	134	102	153	115	173
		X	STD	51.1	76.7	63.9	95.8	76.7	115	89.4	134	—	—	—	—
			SSLT	51.1	76.7	63.9	95.8	76.7	115	89.4	134	102	153	115	173
	Group B	N	STD	51.1	76.7	63.9	95.8	76.7	115	89.4	134	—	—	—	—
			SSLT	51.1	76.7	63.9	95.8	76.7	115	89.4	134	102	153	115	173
		X	STD	51.1	76.7	63.9	95.8	76.7	115	89.4	134	—	—	—	—
			SSLT	51.1	76.7	63.9	95.8	76.7	115	89.4	134	102	153	115	173
5 (L = 15 1/2)	Group A	N	STD/ SSLT	43.0	64.4	53.7	80.5	64.4	96.7	75.2	113	85.9	129	96.3	144
		X		43.0	64.4	53.7	80.5	64.4	96.7	75.2	113	85.9	129	96.7	145
	Group B	N		43.0	64.4	53.7	80.5	64.4	96.7	75.2	113	85.9	129	96.7	145
		X		43.0	64.4	53.7	80.5	64.4	96.7	75.2	113	85.9	129	96.7	145
4 (L = 12 1/2)	Group A	N	STD/ SSLT	34.8	52.2	43.5	65.3	52.2	78.3	60.9	91.4	69.6	104	74.0	111
		X		34.8	52.2	43.5	65.3	52.2	78.3	60.9	91.4	69.6	104	78.3	117
	Group B	N		34.8	52.2	43.5	65.3	52.2	78.3	60.9	91.4	69.6	104	78.3	117
		X		34.8	52.2	43.5	65.3	52.2	78.3	60.9	91.4	69.6	104	78.3	117
Weld Size				3/16		1/4		1/4		5/16		5/16		3/8	

STD = Standard holes
SSLT = Short-slotted holes transverse to direction of load
STD/SSLT = Standard holes or short-slotted holes transverse to direction of load
— Indicates that the plate thickness is greater than the maximum given in Table 10-9.
Tabulated values are grouped when available strength is independent of hole type.

N = Threads included
X = Threads excluded

Table 10-10a (continued)

1-in.-diameter bolts

Single-Plate Connections

Plate F_y = 36 ksi

Bolt, Weld and Single-Plate Available Strengths, kips

n	Bolt Group	Thread Cond.	Hole Type	Plate Thickness, in.											
				1/4		5/16		3/8		7/16		1/2		9/16	
				ASD	LRFD	ASD	LRFD	ASD	LRFD	ASD	LRFD	ASD	LRFD	ASD	LRFD
3 (L = 9 1/2)	Group A	N	STD/ SSLT	26.6	40.0	33.3	50.0	40.0	59.9	46.6	69.9	51.4	77.0	51.4	77.0
		X		26.6	40.0	33.3	50.0	40.0	59.9	46.6	69.9	53.3	79.9	59.9	89.9
	Group B	N		26.6	40.0	33.3	50.0	40.0	59.9	46.6	69.9	53.3	79.9	59.9	89.9
		X		26.6	40.0	33.3	50.0	40.0	59.9	46.6	69.9	53.3	79.9	59.9	89.9
2 (L = 6 1/2)	Group A	N	STD/ SSLT	18.5	27.7	23.1	34.7	27.7	41.6	29.4	44.0	29.4	44.0	29.4	44.0
		X		18.5	27.7	23.1	34.7	27.7	41.6	32.4	48.5	37.0	55.4	37.0	55.4
	Group B	N		18.5	27.7	23.1	34.7	27.7	41.6	32.4	48.5	37.0	55.4	37.0	55.4
		X		18.5	27.7	23.1	34.7	27.7	41.6	32.4	48.5	37.0	55.5	41.6	62.4
Weld Size				3/16		1/4		1/4		5/16		5/16		3/8	

STD = Standard holes
SSLT = Short-slotted holes transverse to direction of load
STD/SSLT = Standard holes or short-slotted holes transverse to direction of load
— Indicates that the plate thickness is greater than the maximum given in Table 10-9.
Tabulated values are grouped when available strength is independent of hole type.

N = Threads included
X = Threads excluded

Table 10-10a (continued)

Single-Plate Connections

Plate $F_y = 36$ ksi

Bolt, Weld and Single-Plate Available Strengths, kips

$1\frac{1}{8}$-in.-diameter bolts

n	Bolt Group	Thread Cond.	Hole Type	Plate Thickness, in.											
				5/16		3/8		7/16		1/2		9/16		5/8	
				ASD	LRFD	ASD	LRFD	ASD	LRFD	ASD	LRFD	ASD	LRFD	ASD	LRFD
12 ($L = 37$)	Group A	N	STD	120	179	144	215	167	251	191	287	—	—	—	—
			SSLT	120	179	144	215	167	251	191	287	215	323	239	359
		X	STD	120	179	144	215	167	251	191	287	—	—	—	—
			SSLT	120	179	144	215	167	251	191	287	215	323	239	359
	Group B	N	STD	120	179	144	215	167	251	191	287	—	—	—	—
			SSLT	120	179	144	215	167	251	191	287	215	323	239	359
		X	STD	120	179	144	215	167	251	191	287	—	—	—	—
			SSLT	120	179	144	215	167	251	191	287	215	323	239	359
11 ($L = 34$)	Group A	N	STD	110	165	132	198	154	231	176	264	—	—	—	—
			SSLT	110	165	132	198	154	231	176	264	198	297	220	330
		X	STD	110	165	132	198	154	231	176	264	—	—	—	—
			SSLT	110	165	132	198	154	231	176	264	198	297	220	330
	Group B	N	STD	110	165	132	198	154	231	176	264	—	—	—	—
			SSLT	110	165	132	198	154	231	176	264	198	297	220	330
		X	STD	110	165	132	198	154	231	176	264	—	—	—	—
			SSLT	110	165	132	198	154	231	176	264	198	297	220	330
10 ($L = 31$)	Group A	N	STD	101	151	121	181	141	211	161	241	—	—	—	—
			SSLT	101	151	121	181	141	211	161	241	181	272	201	302
		X	STD	101	151	121	181	141	211	161	241	—	—	—	—
			SSLT	101	151	121	181	141	211	161	241	181	272	201	302
	Group B	N	STD	101	151	121	181	141	211	161	241	—	—	—	—
			SSLT	101	151	121	181	141	211	161	241	181	272	201	302
		X	STD	101	151	121	181	141	211	161	241	—	—	—	—
			SSLT	101	151	121	181	141	211	161	241	181	272	201	302
9 ($L = 28$)	Group A	N	STD	91.1	137	109	164	128	191	146	219	—	—	—	—
			SSLT	91.1	137	109	164	128	191	146	219	164	246	182	273
		X	STD	91.1	137	109	164	128	191	146	219	—	—	—	—
			SSLT	91.1	137	109	164	128	191	146	219	164	246	182	273
	Group B	N	STD	91.1	137	109	164	128	191	146	219	—	—	—	—
			SSLT	91.1	137	109	164	128	191	146	219	164	246	182	273
		X	STD	91.1	137	109	164	128	191	146	219	—	—	—	—
			SSLT	91.1	137	109	164	128	191	146	219	164	246	182	273
Weld Size				1/4		1/4		5/16		5/16		3/8		7/16	

STD = Standard holes
SSLT = Short-slotted holes transverse to direction of load
— Indicates that the plate thickness is greater than the maximum given in Table 10-9.

N = Threads included
X = Threads excluded

Table 10-10a (continued)

$1\frac{1}{8}$-in.-diameter bolts — Single-Plate Connections — Plate F_y = 36 ksi

Bolt, Weld and Single-Plate Available Strengths, kips

n	Bolt Group	Thread Cond.	Hole Type	Plate Thickness, in.											
				5/16		3/8		7/16		1/2		9/16		5/8	
				ASD	LRFD	ASD	LRFD	ASD	LRFD	ASD	LRFD	ASD	LRFD	ASD	LRFD
8 (L = 25)	Group A	N	STD	81.6	122	97.9	147	114	171	131	196	—	—	—	—
			SSLT	81.6	122	97.9	147	114	171	131	196	147	220	163	245
		X	STD	81.6	122	97.9	147	114	171	131	196	—	—	—	—
			SSLT	81.6	122	97.9	147	114	171	131	196	147	220	163	245
	Group B	N	STD	81.6	122	97.9	147	114	171	131	196	—	—	—	—
			SSLT	81.6	122	97.9	147	114	171	131	196	147	220	163	245
		X	STD	81.6	122	97.9	147	114	171	131	196	—	—	—	—
			SSLT	81.6	122	97.9	147	114	171	131	196	147	220	163	245
7 (L = 22)	Group A	N	STD	72.0	108	86.5	130	101	151	115	173	—	—	—	—
			SSLT	72.0	108	86.5	130	101	151	115	173	130	195	144	216
		X	STD	72.0	108	86.5	130	101	151	115	173	—	—	—	—
			SSLT	72.0	108	86.5	130	101	151	115	173	130	195	144	216
	Group B	N	STD	72.0	108	86.5	130	101	151	115	173	—	—	—	—
			SSLT	72.0	108	86.5	130	101	151	115	173	130	195	144	216
		X	STD	72.0	108	86.5	130	101	151	115	173	—	—	—	—
			SSLT	72.0	108	86.5	130	101	151	115	173	130	195	144	216
6 (L = 19)	Group A	N	STD	62.5	93.8	75.0	113	87.5	131	100	150	—	—	—	—
			SSLT	62.5	93.8	75.0	113	87.5	131	100	150	113	169	125	188
		X	STD	62.5	93.8	75.0	113	87.5	131	100	150	—	—	—	—
			SSLT	62.5	93.8	75.0	113	87.5	131	100	150	113	169	125	188
	Group B	N	STD	62.5	93.8	75.0	113	87.5	131	100	150	—	—	—	—
			SSLT	62.5	93.8	75.0	113	87.5	131	100	150	113	169	125	188
		X	STD	62.5	93.8	75.0	113	87.5	131	100	150	—	—	—	—
			SSLT	62.5	93.8	75.0	113	87.5	131	100	150	113	169	125	188
5 (L = 16)	Group A	N	STD/ SSLT	53.0	79.5	63.6	95.4	74.2	111	84.8	127	95.4	143	106	159
		X		53.0	79.5	63.6	95.4	74.2	111	84.8	127	95.4	143	106	159
	Group B	N		53.0	79.5	63.6	95.4	74.2	111	84.8	127	95.4	143	106	159
		X		53.0	79.5	63.6	95.4	74.2	111	84.8	127	95.4	143	106	159
4 (L = 13)	Group A	N	STD/ SSLT	43.5	65.3	52.2	78.3	60.9	91.4	69.6	104	78.3	117	87.0	131
		X		43.5	65.3	52.2	78.3	60.9	91.4	69.6	104	78.3	117	87.0	131
	Group B	N		43.5	65.3	52.2	78.3	60.9	91.4	69.6	104	78.3	117	87.0	131
		X		43.5	65.3	52.2	78.3	60.9	91.4	69.6	104	78.3	117	87.0	131
Weld Size				1/4		1/4		5/16		5/16		3/8		7/16	

STD = Standard holes
SSLT = Short-slotted holes transverse to direction of load
STD/SSLT = Standard holes or short-slotted holes transverse to direction of load
— Indicates that the plate thickness is greater than the maximum given in Table 10-9.
Tabulated values are grouped when available strength is independent of hole type.

N = Threads included
X = Threads excluded

Table 10-10a (continued)

Single-Plate Connections

Plate $F_y = 36$ ksi

Bolt, Weld and Single-Plate Available Strengths, kips

$1\frac{1}{8}$-in.-diameter bolts

n	Bolt Group	Thread Cond.	Hole Type	Plate Thickness, in.											
				$\frac{5}{16}$		$\frac{3}{8}$		$\frac{7}{16}$		$\frac{1}{2}$		$\frac{9}{16}$		$\frac{5}{8}$	
				ASD	LRFD	ASD	LRFD	ASD	LRFD	ASD	LRFD	ASD	LRFD	ASD	LRFD
3 ($L = 10$)	Group A	N	STD/SSLT	34.0	51.0	40.8	61.2	47.6	71.4	54.4	81.6	61.2	91.8	64.9	97.6
		X		34.0	51.0	40.8	61.2	47.6	71.4	54.4	81.6	61.2	91.8	68.0	102
	Group B	N		34.0	51.0	40.8	61.2	47.6	71.4	54.4	81.6	61.2	91.8	68.0	102
		X		34.0	51.0	40.8	61.2	47.6	71.4	54.4	81.6	61.2	91.8	68.0	102
2 ($L = 7$)	Group A	N	STD/SSLT	24.5	36.7	29.4	44.0	34.3	51.4	37.1	55.8	37.1	55.8	37.1	55.8
		X		24.5	36.7	29.4	44.0	34.3	51.4	39.2	58.7	44.0	66.1	46.8	70.2
	Group B	N		24.5	36.7	29.4	44.0	34.3	51.4	39.2	58.7	44.0	66.1	46.8	70.2
		X		24.5	36.7	29.4	44.0	34.3	51.4	39.2	58.7	44.0	66.1	48.9	73.4
Weld Size				$\frac{1}{4}$		$\frac{1}{4}$		$\frac{5}{16}$		$\frac{5}{16}$		$\frac{3}{8}$		$\frac{7}{16}$	

STD = Standard holes
SSLT = Short-slotted holes transverse to direction of load
STD/SSLT = Standard holes or short-slotted holes transverse to direction of load
— Indicates that the plate thickness is greater than the maximum given in Table 10-9.
Tabulated values are grouped when available strength is independent of hole type.

N = Threads included
X = Threads excluded

Table 10-10b
Single-Plate Connections
Bolt, Weld and Single-Plate Available Strengths, kips

3/4-in.-diameter bolts

Plate $F_y = 50$ ksi

n	Bolt Group	Thread Cond.	Hole Type	Plate Thickness, in. 1/4 ASD	1/4 LRFD	5/16 ASD	5/16 LRFD	3/8 ASD	3/8 LRFD	7/16 ASD	7/16 LRFD	1/2 ASD	1/2 LRFD	9/16 ASD	9/16 LRFD
12 (L = 35 1/2)	Group A	N	STD	122	183	134	202	—	—	—	—	—	—	—	—
			SSLT	122	183	138	208	138	208	138	208	—	—	—	—
		X	STD	122	183	152	229	—	—	—	—	—	—	—	—
			SSLT	122	183	152	229	174	262	174	262	—	—	—	—
	Group B	N	STD	122	183	152	229	—	—	—	—	—	—	—	—
			SSLT	122	183	152	229	174	262	174	262	—	—	—	—
		X	STD	122	183	152	229	—	—	—	—	—	—	—	—
			SSLT	122	183	152	229	183	274	213	320	—	—	—	—
11 (L = 32 1/2)	Group A	N	STD	112	167	121	183	—	—	—	—	—	—	—	—
			SSLT	112	167	126	190	126	190	126	190	—	—	—	—
		X	STD	112	167	139	209	—	—	—	—	—	—	—	—
			SSLT	112	167	139	209	159	239	159	239	—	—	—	—
	Group B	N	STD	112	167	139	209	—	—	—	—	—	—	—	—
			SSLT	112	167	139	209	159	239	159	239	—	—	—	—
		X	STD	112	167	139	209	—	—	—	—	—	—	—	—
			SSLT	112	167	139	209	167	251	195	293	—	—	—	—
10 (L = 29 1/2)	Group A	N	STD	101	152	110	165	—	—	—	—	—	—	—	—
			SSLT	101	152	115	173	115	173	115	173	—	—	—	—
		X	STD	101	152	126	190	—	—	—	—	—	—	—	—
			SSLT	101	152	126	190	145	217	145	217	—	—	—	—
	Group B	N	STD	101	152	126	190	—	—	—	—	—	—	—	—
			SSLT	101	152	126	190	145	217	145	217	—	—	—	—
		X	STD	101	152	126	190	—	—	—	—	—	—	—	—
			SSLT	101	152	126	190	152	228	177	266	—	—	—	—
9 (L = 26 1/2)	Group A	N	STD	90.8	136	97.2	146	—	—	—	—	—	—	—	—
			SSLT	90.8	136	103	155	103	155	103	155	—	—	—	—
		X	STD	90.8	136	113	170	—	—	—	—	—	—	—	—
			SSLT	90.8	136	113	170	130	194	130	194	—	—	—	—
	Group B	N	STD	90.8	136	113	170	—	—	—	—	—	—	—	—
			SSLT	90.8	136	113	170	130	194	130	194	—	—	—	—
		X	STD	90.8	136	113	170	—	—	—	—	—	—	—	—
			SSLT	90.8	136	113	170	136	204	159	238	—	—	—	—
Weld Size				3/16		1/4		1/4		5/16		5/16		3/8	

STD = Standard holes
SSLT = Short-slotted holes transverse to direction of load
N = Threads included
X = Threads excluded
— Indicates that the plate thickness is greater than the maximum given in Table 10-9.

Table 10-10b (continued)

Single-Plate Connections

Plate $F_y = 50$ ksi

Bolt, Weld and Single-Plate Available Strengths, kips

3/4-in.-diameter bolts

n	Bolt Group	Thread Cond.	Hole Type	Plate Thickness, in. 1/4 ASD	1/4 LRFD	5/16 ASD	5/16 LRFD	3/8 ASD	3/8 LRFD	7/16 ASD	7/16 LRFD	1/2 ASD	1/2 LRFD	9/16 ASD	9/16 LRFD
8 ($L = 23^1/_2$)	Group A	N	STD	80.4	121	84.7	127	—	—	—	—	—	—	—	—
			SSLT	80.4	121	90.8	137	90.8	137	90.8	137	—	—	—	—
		X	STD	80.4	121	101	151	—	—	—	—	—	—	—	—
			SSLT	80.4	121	101	151	114	172	114	172	—	—	—	—
	Group B	N	STD	80.4	121	101	151	—	—	—	—	—	—	—	—
			SSLT	80.4	121	101	151	114	172	114	172	—	—	—	—
		X	STD	80.4	121	101	151	—	—	—	—	—	—	—	—
			SSLT	80.4	121	101	151	121	181	141	211	—	—	—	—
7 ($L = 20^1/_2$)	Group A	N	STD	70.1	105	72.1	108	—	—	—	—	—	—	—	—
			SSLT	70.1	105	78.7	118	78.7	118	78.7	118	—	—	—	—
		X	STD	70.1	105	87.6	131	—	—	—	—	—	—	—	—
			SSLT	70.1	105	87.6	131	99.2	149	99.2	149	—	—	—	—
	Group B	N	STD	70.1	105	87.6	131	—	—	—	—	—	—	—	—
			SSLT	70.1	105	87.6	131	99.2	149	99.2	149	—	—	—	—
		X	STD	70.1	105	87.6	131	—	—	—	—	—	—	—	—
			SSLT	70.1	105	87.6	131	105	158	123	184	—	—	—	—
6 ($L = 17^1/_2$)	Group A	N	STD	59.3	89.1	59.3	89.1	—	—	—	—	—	—	—	—
			SSLT	59.7	89.6	66.5	100	66.5	100	66.5	100	—	—	—	—
		X	STD	59.7	89.6	74.6	112	—	—	—	—	—	—	—	—
			SSLT	59.7	89.6	74.6	112	83.8	126	83.8	126	—	—	—	—
	Group B	N	STD	59.7	89.6	74.6	112	—	—	—	—	—	—	—	—
			SSLT	59.7	89.6	74.6	112	83.8	126	83.8	126	—	—	—	—
		X	STD	59.7	89.6	74.6	112	—	—	—	—	—	—	—	—
			SSLT	59.7	89.6	74.6	112	89.6	134	104	155	—	—	—	—
5 ($L = 14^1/_2$)	Group A	N	STD	49.4	74.0	54.1	81.3	54.1	81.3	54.1	81.3	—	—	—	—
			SSLT	49.4	74.0	54.1	81.3	54.1	81.3	54.1	81.3	54.1	81.3	54.1	81.3
		X	STD	49.4	74.0	61.7	92.5	68.1	102	68.1	102	—	—	—	—
			SSLT	49.4	74.0	61.7	92.5	68.1	102	68.1	102	68.1	102	68.1	102
	Group B	N	STD	49.4	74.0	61.7	92.5	68.1	102	68.1	102	—	—	—	—
			SSLT	49.4	74.0	61.7	92.5	68.1	102	68.1	102	68.1	102	68.1	102
		X	STD	49.4	74.0	61.7	92.5	74.0	111	84.5	126	—	—	—	—
			SSLT	49.4	74.0	61.7	92.5	74.0	111	84.5	126	84.5	126	84.5	126
Weld Size				3/16		1/4		1/4		5/16		5/16		3/8	

STD = Standard holes
SSLT = Short-slotted holes transverse to direction of load
— Indicates that the plate thickness is greater than the maximum given in Table 10-9.

N = Threads included
X = Threads excluded

Table 10-10b (continued)

3/4-in.-diameter bolts — Single-Plate Connections — Plate F_y = 50 ksi

Bolt, Weld and Single-Plate Available Strengths, kips

n	Bolt Group	Thread Cond.	Hole Type	Plate Thickness, in. 1/4 ASD	1/4 LRFD	5/16 ASD	5/16 LRFD	3/8 ASD	3/8 LRFD	7/16 ASD	7/16 LRFD	1/2 ASD	1/2 LRFD	9/16 ASD	9/16 LRFD
4 (L = 11 1/2)	Group A	N	STD	39.0	58.5	41.5	62.5	41.5	62.5	41.5	62.5	—	—	—	—
			SSLT	39.0	58.5	41.5	62.5	41.5	62.5	41.5	62.5	41.5	62.5	41.5	62.5
		X	STD	39.0	58.5	48.8	73.1	52.4	78.5	52.4	78.5	—	—	—	—
			SSLT	39.0	58.5	48.8	73.1	52.4	78.5	52.4	78.5	52.4	78.5	52.4	78.5
	Group B	N	STD	39.0	58.5	48.8	73.1	52.4	78.5	52.4	78.5	—	—	—	—
			SSLT	39.0	58.5	48.8	73.1	52.4	78.5	52.4	78.5	52.4	78.5	52.4	78.5
		X	STD	39.0	58.5	48.8	73.1	58.5	87.8	64.9	97.0	—	—	—	—
			SSLT	39.0	58.5	48.8	73.1	58.5	87.8	64.9	97.0	64.9	97.0	64.9	97.0
3 (L = 8 1/2)	Group A	N	STD	28.6	43.0	28.8	43.4	28.8	43.4	28.8	43.4	—	—	—	—
			SSLT	28.6	43.0	28.8	43.4	28.8	43.4	28.8	43.4	28.8	43.4	28.8	43.4
		X	STD	28.6	43.0	35.8	53.7	36.3	54.5	36.3	54.5	—	—	—	—
			SSLT	28.6	43.0	35.8	53.7	36.3	54.5	36.3	54.5	36.3	54.5	36.3	54.5
	Group B	N	STD	28.6	43.0	35.8	53.7	36.3	54.5	36.3	54.5	—	—	—	—
			SSLT	28.6	43.0	35.8	53.7	36.3	54.5	36.3	54.5	36.3	54.5	36.3	54.5
		X	STD	28.6	43.0	35.8	53.7	43.0	64.4	45.1	67.3	—	—	—	—
			SSLT	28.6	43.0	35.8	53.7	43.0	64.4	45.1	67.3	45.1	67.3	45.1	67.3
2 (L = 5 1/2)	Group A	N	STD	16.5	24.8	16.5	24.8	16.5	24.8	16.5	24.8	—	—	—	—
			SSLT	16.5	24.8	16.5	24.8	16.5	24.8	16.5	24.8	16.5	24.8	16.5	24.8
		X	STD	18.3	27.4	20.8	31.2	20.8	31.2	20.8	31.2	—	—	—	—
			SSLT	18.3	27.4	20.8	31.2	20.8	31.2	20.8	31.2	20.8	31.2	20.8	31.2
	Group B	N	STD	18.3	27.4	20.8	31.2	20.8	31.2	20.8	31.2	—	—	—	—
			SSLT	18.3	27.4	20.8	31.2	20.8	31.2	20.8	31.2	20.8	31.2	20.8	31.2
		X	STD	18.3	27.4	22.9	34.3	25.8	38.5	25.8	38.5	—	—	—	—
			SSLT	18.3	27.4	22.9	34.3	25.8	38.5	25.8	38.5	25.8	38.5	25.8	38.5
Weld Size				3/16		1/4		1/4		5/16		5/16		3/8	

STD = Standard holes
SSLT = Short-slotted holes transverse to direction of load
— Indicates that the plate thickness is greater than the maximum given in Table 10-9.

N = Threads included
X = Threads excluded

Table 10-10b (continued)

Single-Plate Connections

Plate $F_y = 50$ ksi

Bolt, Weld and Single-Plate Available Strengths, kips

7/8-in.-diameter bolts

n	Bolt Group	Thread Cond.	Hole Type	Plate Thickness, in. 1/4 ASD	1/4 LRFD	5/16 ASD	5/16 LRFD	3/8 ASD	3/8 LRFD	7/16 ASD	7/16 LRFD	1/2 ASD	1/2 LRFD	9/16 ASD	9/16 LRFD
12 ($L = 36$)	Group A	N	STD	117	176	146	219	176	263	—	—	—	—	—	—
			SSLT	117	176	146	219	176	263	188	282	188	282	—	—
		X	STD	117	176	146	219	176	263	—	—	—	—	—	—
			SSLT	117	176	146	219	176	263	205	307	234	351	—	—
	Group B	N	STD	117	176	146	219	176	263	—	—	—	—	—	—
			SSLT	117	176	146	219	176	263	205	307	234	351	—	—
		X	STD	117	176	146	219	176	263	—	—	—	—	—	—
			SSLT	117	176	146	219	176	263	205	307	234	351	—	—
11 ($L = 33$)	Group A	N	STD	107	161	134	201	161	241	—	—	—	—	—	—
			SSLT	107	161	134	201	161	241	172	258	172	258	—	—
		X	STD	107	161	134	201	161	241	—	—	—	—	—	—
			SSLT	107	161	134	201	161	241	188	282	215	322	—	—
	Group B	N	STD	107	161	134	201	161	241	—	—	—	—	—	—
			SSLT	107	161	134	201	161	241	188	282	215	322	—	—
		X	STD	107	161	134	201	161	241	—	—	—	—	—	—
			SSLT	107	161	134	201	161	241	188	282	215	322	—	—
10 ($L = 30$)	Group A	N	STD	97.5	146	122	183	146	219	—	—	—	—	—	—
			SSLT	97.5	146	122	183	146	219	156	234	156	234	—	—
		X	STD	97.5	146	122	183	146	219	—	—	—	—	—	—
			SSLT	97.5	146	122	183	146	219	171	256	195	293	—	—
	Group B	N	STD	97.5	146	122	183	146	219	—	—	—	—	—	—
			SSLT	97.5	146	122	183	146	219	171	256	195	293	—	—
		X	STD	97.5	146	122	183	146	219	—	—	—	—	—	—
			SSLT	97.5	146	122	183	146	219	171	256	195	293	—	—
9 ($L = 27$)	Group A	N	STD	87.8	132	110	165	132	197	—	—	—	—	—	—
			SSLT	87.8	132	110	165	132	197	140	210	140	210	—	—
		X	STD	87.8	132	110	165	132	197	—	—	—	—	—	—
			SSLT	87.8	132	110	165	132	197	154	230	176	263	—	—
	Group B	N	STD	87.8	132	110	165	132	197	—	—	—	—	—	—
			SSLT	87.8	132	110	165	132	197	154	230	176	263	—	—
		X	STD	87.8	132	110	165	132	197	—	—	—	—	—	—
			SSLT	87.8	132	110	165	132	197	154	230	176	263	—	—
Weld Size				3/16		1/4		1/4		5/16		5/16		3/8	

STD = Standard holes
SSLT = Short-slotted holes transverse to direction of load
N = Threads included
X = Threads excluded
— Indicates that the plate thickness is greater than the maximum given in Table 10-9.

Table 10-10b (continued)

7/8-in.-diameter bolts — Single-Plate Connections — Plate F_y = 50 ksi

Bolt, Weld and Single-Plate Available Strengths, kips

n	Bolt Group	Thread Cond.	Hole Type	Plate Thickness, in. 1/4 ASD	1/4 LRFD	5/16 ASD	5/16 LRFD	3/8 ASD	3/8 LRFD	7/16 ASD	7/16 LRFD	1/2 ASD	1/2 LRFD	9/16 ASD	9/16 LRFD
8 (L = 24)	Group A	N	STD	78.0	117	97.5	146	115	173	—	—	—	—	—	—
			SSLT	78.0	117	97.5	146	117	176	124	185	124	185	—	—
		X	STD	78.0	117	97.5	146	117	176	—	—	—	—	—	—
			SSLT	78.0	117	97.5	146	117	176	137	205	156	234	—	—
	Group B	N	STD	78.0	117	97.5	146	117	176	—	—	—	—	—	—
			SSLT	78.0	117	97.5	146	117	176	137	205	156	234	—	—
		X	STD	78.0	117	97.5	146	117	176	—	—	—	—	—	—
			SSLT	78.0	117	97.5	146	117	176	137	205	156	234	—	—
7 (L = 21)	Group A	N	STD	68.3	102	85.3	128	98.2	147	—	—	—	—	—	—
			SSLT	68.3	102	85.3	128	102	154	107	161	107	161	—	—
		X	STD	68.3	102	85.3	128	102	154	—	—	—	—	—	—
			SSLT	68.3	102	85.3	128	102	154	119	179	135	203	—	—
	Group B	N	STD	68.3	102	85.3	128	102	154	—	—	—	—	—	—
			SSLT	68.3	102	85.3	128	102	154	119	179	135	203	—	—
		X	STD	68.3	102	85.3	128	102	154	—	—	—	—	—	—
			SSLT	68.3	102	85.3	128	102	154	119	179	137	205	—	—
6 (L = 18)	Group A	N	STD	58.5	87.8	73.1	110	80.7	121	—	—	—	—	—	—
			SSLT	58.5	87.8	73.1	110	87.8	132	90.5	136	90.5	136	—	—
		X	STD	58.5	87.8	73.1	110	87.8	132	—	—	—	—	—	—
			SSLT	58.5	87.8	73.1	110	87.8	132	102	154	114	172	—	—
	Group B	N	STD	58.5	87.8	73.1	110	87.8	132	—	—	—	—	—	—
			SSLT	58.5	87.8	73.1	110	87.8	132	102	154	114	172	—	—
		X	STD	58.5	87.8	73.1	110	87.8	132	—	—	—	—	—	—
			SSLT	58.5	87.8	73.1	110	87.8	132	102	154	117	176	—	—
5 (L = 15)	Group A	N	STD	48.8	73.1	60.9	91.4	73.1	110	73.6	110	73.6	110	—	—
			SSLT	48.8	73.1	60.9	91.4	73.1	110	73.6	110	73.6	110	73.6	110
		X	STD	48.8	73.1	60.9	91.4	73.1	110	85.3	128	92.7	139	—	—
			SSLT	48.8	73.1	60.9	91.4	73.1	110	85.3	128	92.7	139	92.7	139
	Group B	N	STD	48.8	73.1	60.9	91.4	73.1	110	85.3	128	92.7	139	—	—
			SSLT	48.8	73.1	60.9	91.4	73.1	110	85.3	128	92.7	139	92.7	139
		X	STD	48.8	73.1	60.9	91.4	73.1	110	85.3	128	97.5	146	—	—
			SSLT	48.8	73.1	60.9	91.4	73.1	110	85.3	128	97.5	146	110	165
Weld Size				3/16		1/4		1/4		5/16		5/16		3/8	

STD = Standard holes
SSLT = Short-slotted holes transverse to direction of load
— Indicates that the plate thickness is greater than the maximum given in Table 10-9.

N = Threads included
X = Threads excluded

Table 10-10b (continued)
Single-Plate Connections
Bolt, Weld and Single-Plate Available Strengths, kips

Plate $F_y = 50$ ksi

7/8-in.-diameter bolts

n	Bolt Group	Thread Cond.	Hole Type	Plate Thickness, in. 1/4 ASD	1/4 LRFD	5/16 ASD	5/16 LRFD	3/8 ASD	3/8 LRFD	7/16 ASD	7/16 LRFD	1/2 ASD	1/2 LRFD	9/16 ASD	9/16 LRFD
4 ($L = 12$)	Group A	N	STD	39.0	58.5	48.8	73.1	56.5	84.8	56.5	84.8	56.5	84.8	—	—
			SSLT	39.0	58.5	48.8	73.1	56.5	84.8	56.5	84.8	56.5	84.8	56.5	84.8
		X	STD	39.0	58.5	48.8	73.1	58.5	87.8	68.3	102	71.2	107	—	—
			SSLT	39.0	58.5	48.8	73.1	58.5	87.8	68.3	102	71.2	107	71.2	107
	Group B	N	STD	39.0	58.5	48.8	73.1	58.5	87.8	68.3	102	71.2	107	—	—
			SSLT	39.0	58.5	48.8	73.1	58.5	87.8	68.3	102	71.2	107	71.2	107
		X	STD	39.0	58.5	48.8	73.1	58.5	87.8	68.3	102	78.0	117	—	—
			SSLT	39.0	58.5	48.8	73.1	58.5	87.8	68.3	102	78.0	117	87.8	132
3 ($L = 9$)	Group A	N	STD	29.3	43.9	36.6	54.8	39.2	58.9	39.2	58.9	39.2	58.9	—	—
			SSLT	29.3	43.9	36.6	54.8	39.2	58.9	39.2	58.9	39.2	58.9	39.2	58.9
		X	STD	29.3	43.9	36.6	54.8	43.9	65.8	49.4	74.4	49.4	74.4	—	—
			SSLT	29.3	43.9	36.6	54.8	43.9	65.8	49.4	74.4	49.4	74.4	49.4	74.4
	Group B	N	STD	29.3	43.9	36.6	54.8	43.9	65.8	49.4	74.4	49.4	74.4	—	—
			SSLT	29.3	43.9	36.6	54.8	43.9	65.8	49.4	74.4	49.4	74.4	49.4	74.4
		X	STD	29.3	43.9	36.6	54.8	43.9	65.8	51.2	76.8	58.5	87.8	—	—
			SSLT	29.3	43.9	36.6	54.8	43.9	65.8	51.2	76.8	58.5	87.8	61.0	91.8
2 ($L = 6$)	Group A	N	STD	19.5	29.3	22.4	33.7	22.4	33.7	22.4	33.7	22.4	33.7	—	—
			SSLT	19.5	29.3	22.4	33.7	22.4	33.7	22.4	33.7	22.4	33.7	22.4	33.7
		X	STD	19.5	29.3	24.4	36.6	28.3	42.5	28.3	42.5	28.3	42.5	—	—
			SSLT	19.5	29.3	24.4	36.6	28.3	42.5	28.3	42.5	28.3	42.5	28.3	42.5
	Group B	N	STD	19.5	29.3	24.4	36.6	28.3	42.5	28.3	42.5	28.3	42.5	—	—
			SSLT	19.5	29.3	24.4	36.6	28.3	42.5	28.3	42.5	28.3	42.5	28.3	42.5
		X	STD	19.5	29.3	24.4	36.6	29.3	43.9	34.1	51.2	34.9	52.5	—	—
			SSLT	19.5	29.3	24.4	36.6	29.3	43.9	34.1	51.2	34.9	52.5	34.9	52.5
Weld Size				3/16		1/4		1/4		5/16		5/16		3/8	

STD = Standard holes
SSLT = Short-slotted holes transverse to direction of load
N = Threads included
X = Threads excluded
— Indicates that the plate thickness is greater than the maximum given in Table 10-9.

Table 10-10b (continued)

1-in.-diameter bolts — Single-Plate Connections — Plate F_y = 50 ksi

Bolt, Weld and Single-Plate Available Strengths, kips

n	Bolt Group	Thread Cond.	Hole Type	Plate Thickness, in.											
				1/4		5/16		3/8		7/16		1/2		9/16	
				ASD	LRFD	ASD	LRFD	ASD	LRFD	ASD	LRFD	ASD	LRFD	ASD	LRFD
12 (L = 36 1/2)	Group A	N	STD	112	168	140	210	168	252	196	294	—	—	—	—
			SSLT	112	168	140	210	168	252	196	294	224	336	246	370
		X	STD	112	168	140	210	168	252	196	294	—	—	—	—
			SSLT	112	168	140	210	168	252	196	294	224	336	252	378
	Group B	N	STD	112	168	140	210	168	252	196	294	—	—	—	—
			SSLT	112	168	140	210	168	252	196	294	224	336	252	378
		X	STD	112	168	140	210	168	252	196	294	—	—	—	—
			SSLT	112	168	140	210	168	252	196	294	224	336	252	378
11 (L = 33 1/2)	Group A	N	STD	103	154	129	193	154	232	180	270	—	—	—	—
			SSLT	103	154	129	193	154	232	180	270	206	309	225	338
		X	STD	103	154	129	193	154	232	180	270	—	—	—	—
			SSLT	103	154	129	193	154	232	180	270	206	309	232	348
	Group B	N	STD	103	154	129	193	154	232	180	270	—	—	—	—
			SSLT	103	154	129	193	154	232	180	270	206	309	232	348
		X	STD	103	154	129	193	154	232	180	270	—	—	—	—
			SSLT	103	154	129	193	154	232	180	270	206	309	232	348
10 (L = 30 1/2)	Group A	N	STD	93.8	141	117	176	141	211	164	246	—	—	—	—
			SSLT	93.8	141	117	176	141	211	164	246	188	282	205	307
		X	STD	93.8	141	117	176	141	211	164	246	—	—	—	—
			SSLT	93.8	141	117	176	141	211	164	246	188	282	211	317
	Group B	N	STD	93.8	141	117	176	141	211	164	246	—	—	—	—
			SSLT	93.8	141	117	176	141	211	164	246	188	282	211	317
		X	STD	93.8	141	117	176	141	211	164	246	—	—	—	—
			SSLT	93.8	141	117	176	141	211	164	246	188	282	211	317
9 (L = 27 1/2)	Group A	N	STD	84.7	127	106	159	127	191	148	222	—	—	—	—
			SSLT	84.7	127	106	159	127	191	148	222	169	254	183	275
		X	STD	84.7	127	106	159	127	191	148	222	—	—	—	—
			SSLT	84.7	127	106	159	127	191	148	222	169	254	191	286
	Group B	N	STD	84.7	127	106	159	127	191	148	222	—	—	—	—
			SSLT	84.7	127	106	159	127	191	148	222	169	254	191	286
		X	STD	84.7	127	106	159	127	191	148	222	—	—	—	—
			SSLT	84.7	127	106	159	127	191	148	222	169	254	191	286
Weld Size				3/16		1/4		1/4		6/16		5/16		3/8	

STD = Standard holes
SSLT = Short-slotted holes transverse to direction of load
N = Threads included
X = Threads excluded
— Indicates that the plate thickness is greater than the maximum given in Table 10-9.

Table 10-10b (continued)

Single-Plate Connections

Plate $F_y = 50$ ksi

1-in.-diameter bolts

Bolt, Weld and Single-Plate Available Strengths, kips

n	Bolt Group	Thread Cond.	Hole Type	Plate Thickness, in.											
				1/4		5/16		3/8		7/16		1/2		9/16	
				ASD	LRFD	ASD	LRFD	ASD	LRFD	ASD	LRFD	ASD	LRFD	ASD	LRFD
8 ($L = 24^1/_2$)	Group A	N	STD	75.6	113	94.5	142	113	170	132	198	—	—	—	—
			SSLT	75.6	113	94.5	142	113	170	132	198	151	227	162	243
		X	STD	75.6	113	94.5	142	113	170	132	198	—	—	—	—
			SSLT	75.6	113	94.5	142	113	170	132	198	151	227	170	255
	Group B	N	STD	75.6	113	94.5	142	113	170	132	198	—	—	—	—
			SSLT	75.6	113	94.5	142	113	170	132	198	151	227	170	255
		X	STD	75.6	113	94.5	142	113	170	132	198	—	—	—	—
			SSLT	75.6	113	94.5	142	113	170	132	198	151	227	170	255
7 ($L = 21^1/_2$)	Group A	N	STD	66.4	99.6	83.0	125	99.6	149	116	174	—	—	—	—
			SSLT	66.4	99.6	83.0	125	99.6	149	116	174	133	199	140	210
		X	STD	66.4	99.6	83.0	125	99.6	149	116	174	—	—	—	—
			SSLT	66.4	99.6	83.0	125	99.6	149	116	174	133	199	149	224
	Group B	N	STD	66.4	99.6	83.0	125	99.6	149	116	174	—	—	—	—
			SSLT	66.4	99.6	83.0	125	99.6	149	116	174	133	199	149	224
		X	STD	66.4	99.6	83.0	125	99.6	149	116	174	—	—	—	—
			SSLT	66.4	99.6	83.0	125	99.6	149	116	174	133	199	149	224
6 ($L = 18^1/_2$)	Group A	N	STD	57.3	85.9	71.6	107	85.9	129	100	150	—	—	—	—
			SSLT	57.3	85.9	71.6	107	85.9	129	100	150	115	172	118	178
		X	STD	57.3	85.9	71.6	107	85.9	129	100	150	—	—	—	—
			SSLT	57.3	85.9	71.6	107	85.9	129	100	150	115	172	129	193
	Group B	N	STD	57.3	85.9	71.6	107	85.9	129	100	150	—	—	—	—
			SSLT	57.3	85.9	71.6	107	85.9	129	100	150	115	172	129	193
		X	STD	57.3	85.9	71.6	107	85.9	129	100	150	—	—	—	—
			SSLT	57.3	85.9	71.6	107	85.9	129	100	150	115	172	129	193
5 ($L = 15^1/_2$)	Group A	N	STD/ SSLT	48.1	72.2	60.2	90.3	72.2	108	84.2	126	96.3	144	96.3	144
		X		48.1	72.2	60.2	90.3	72.2	108	84.2	126	96.3	144	108	162
	Group B	N		48.1	72.2	60.2	90.3	72.2	108	84.2	126	96.3	144	108	162
		X		48.1	72.2	60.2	90.3	72.2	108	84.2	126	96.3	144	108	162
4 ($L = 12^1/_2$)	Group A	N	STD/ SSLT	39.0	58.5	48.8	73.1	58.5	87.8	68.3	102	74.0	111	74.0	111
		X		39.0	58.5	48.8	73.1	58.5	87.8	68.3	102	78.0	117	87.8	132
	Group B	N		39.0	58.5	48.8	73.1	58.5	87.8	68.3	102	78.0	117	87.8	132
		X		39.0	58.5	48.8	73.1	58.5	87.8	68.3	102	78.0	117	87.8	132
Weld Size				5/16		1/4		1/4		5/16		5/16		3/8	

STD = Standard holes
SSLT = Short-slotted holes transverse to direction of load
STD/SSLT = Standard holes or short-slotted holes transverse to direction of load
— Indicates that the plate thickness is greater than the maximum given in Table 10-9.
Tabulated values are grouped when available strength is independent of hole type.

N = Threads included
X = Threads excluded

Table 10-10b (continued)

Single-Plate Connections

1-in.-diameter bolts

Plate F_y = 50 ksi

Bolt, Weld and Single-Plate Available Strengths, kips

n	Bolt Group	Thread Cond.	Hole Type	Plate Thickness, in.											
				1/4		5/16		3/8		7/16		1/2		9/16	
				ASD	LRFD	ASD	LRFD	ASD	LRFD	ASD	LRFD	ASD	LRFD	ASD	LRFD
3 (L = 9 1/2)	Group A	N	STD/ SSLT	29.9	44.8	37.3	56.0	44.8	67.2	51.4	77.0	51.4	77.0	51.4	77.0
		X		29.9	44.8	37.3	56.0	44.8	67.2	52.3	78.4	59.7	89.6	64.7	96.9
	Group B	N		29.9	44.8	37.3	56.0	44.8	67.2	52.3	78.4	59.7	89.6	64.7	96.9
		X		29.9	44.8	37.3	56.0	44.8	67.2	52.3	78.4	59.7	89.6	67.2	101
2 (L = 6 1/2)	Group A	N	STD/ SSLT	20.7	31.1	25.9	38.8	29.4	44.0	29.4	44.0	29.4	44.0	29.4	44.0
		X		20.7	31.1	25.9	38.8	31.1	46.6	36.3	54.4	37.0	55.4	37.0	55.4
	Group B	N		20.7	31.1	25.9	38.8	31.1	46.6	36.3	54.4	37.0	55.4	37.0	55.4
		X		20.7	31.1	25.9	38.8	31.1	46.6	36.3	54.4	41.4	62.2	45.7	68.6
Weld Size				3/16		1/4		1/4		5/16		5/16		3/8	

STD = Standard holes
SSLT = Short-slotted holes transverse to direction of load
STD/SSLT = Standard holes or short-slotted holes transverse to direction of load
— Indicates that the plate thickness is greater than the maximum given in Table 10-9.
Tabulated values are grouped when available strength is independent of hole type.

N = Threads included
X = Threads excluded

Table 10-10b (continued)

Single-Plate Connections

Plate $F_y = 50$ ksi

Bolt, Weld and Single-Plate Available Strengths, kips

$1\frac{1}{8}$-in.-diameter bolts

n	Bolt Group	Thread Cond.	Hole Type	Plate Thickness, in.											
				5/16		3/8		7/16		1/2		9/16		5/8	
				ASD	LRFD	ASD	LRFD	ASD	LRFD	ASD	LRFD	ASD	LRFD	ASD	LRFD
12 ($L = 37$)	Group A	N	STD	134	201	161	241	188	282	215	322	—	—	—	—
			SSLT	134	201	161	241	188	282	215	322	241	362	268	402
		X	STD	134	201	161	241	188	282	215	322	—	—	—	—
			SSLT	134	201	161	241	188	282	215	322	241	362	268	402
	Group B	N	STD	134	201	161	241	188	282	215	322	—	—	—	—
			SSLT	134	201	161	241	188	282	215	322	241	362	268	402
		X	STD	134	201	161	241	188	282	215	322	—	—	—	—
			SSLT	134	201	161	241	188	282	215	322	241	362	268	402
11 ($L = 34$)	Group A	N	STD	123	185	148	222	173	259	197	296	—	—	—	—
			SSLT	123	185	148	222	173	259	197	296	222	333	247	370
		X	STD	123	185	148	222	173	259	197	296	—	—	—	—
			SSLT	123	185	148	222	173	259	197	296	222	333	247	370
	Group B	N	STD	123	185	148	222	173	259	197	296	—	—	—	—
			SSLT	123	185	148	222	173	259	197	296	222	333	247	370
		X	STD	123	185	148	222	173	259	197	296	—	—	—	—
			SSLT	123	185	148	222	173	259	197	296	222	333	247	370
10 ($L = 31$)	Group A	N	STD	113	169	135	203	158	237	180	271	—	—	—	—
			SSLT	113	169	135	203	158	237	180	271	203	304	225	338
		X	STD	113	169	135	203	158	237	180	271	—	—	—	—
			SSLT	113	169	135	203	158	237	180	271	203	304	225	338
	Group B	N	STD	113	169	135	203	158	237	180	271	—	—	—	—
			SSLT	113	169	135	203	158	237	180	271	203	304	225	338
		X	STD	113	169	135	203	158	237	180	271	—	—	—	—
			SSLT	113	169	135	203	158	237	180	271	203	304	225	338
9 ($L = 28$)	Group A	N	STD	102	153	122	184	143	214	163	245	—	—	—	—
			SSLT	102	153	122	184	143	214	163	245	184	276	204	306
		X	STD	102	153	122	184	143	214	163	245	—	—	—	—
			SSLT	102	153	122	184	143	214	163	245	184	276	204	306
	Group B	N	STD	102	153	122	184	143	214	163	245	—	—	—	—
			SSLT	102	153	122	184	143	214	163	245	184	276	204	306
		X	STD	102	153	122	184	143	214	163	245	—	—	—	—
			SSLT	102	153	122	184	143	214	163	245	184	276	204	306
Weld Size				1/4		1/4		5/16		5/16		3/8		7/16	

STD = Standard holes
SSLT = Short-slotted holes transverse to direction of load
N = Threads included
X = Threads excluded
— Indicates that the plate thickness is greater than the maximum given in Table 10-9.
Tabulated values are grouped when available strength is independent of hole type.

Table 10-10b (continued)

1 1/8-in.-diameter bolts Single-Plate Connections

Plate F_y = 50 ksi

Bolt, Weld and Single-Plate Available Strengths, kips

n	Bolt Group	Thread Cond.	Hole Type	Plate Thickness, in.											
				5/16		3/8		7/16		1/2		9/16		5/8	
				ASD	LRFD	ASD	LRFD	ASD	LRFD	ASD	LRFD	ASD	LRFD	ASD	LRFD
8 (L = 25)	Group A	N	STD	91.4	137	110	165	128	192	146	219	—	—	—	—
			SSLT	91.4	137	110	165	128	192	146	219	165	247	183	274
		X	STD	91.4	137	110	165	128	192	146	219	—	—	—	—
			SSLT	91.4	137	110	165	128	192	146	219	165	247	183	274
	Group B	N	STD	91.4	137	110	165	128	192	146	219	—	—	—	—
			SSLT	91.4	137	110	165	128	192	146	219	165	247	183	274
		X	STD	91.4	137	110	165	128	192	146	219	—	—	—	—
			SSLT	91.4	137	110	165	128	192	146	219	165	247	183	274
7 (L = 22)	Group A	N	STD	80.7	121	96.9	145	113	170	129	194	—	—	—	—
			SSLT	80.7	121	96.9	145	113	170	129	194	145	218	161	242
		X	STD	80.7	121	96.9	145	113	170	129	194	—	—	—	—
			SSLT	80.7	121	96.9	145	113	170	129	194	145	218	161	242
	Group B	N	STD	80.7	121	96.9	145	113	170	129	194	—	—	—	—
			SSLT	80.7	121	96.9	145	113	170	129	194	145	218	161	242
		X	STD	80.7	121	96.9	145	113	170	129	194	—	—	—	—
			SSLT	80.7	121	96.9	145	113	170	129	194	145	218	161	242
6 (L = 19)	Group A	N	STD	70.1	105	84.1	126	98.1	147	112	168	—	—	—	—
			SSLT	70.1	105	84.1	126	98.1	147	112	168	126	189	140	210
		X	STD	70.1	105	84.1	126	98.1	147	112	168	—	—	—	—
			SSLT	70.1	105	84.1	126	98.1	147	112	168	126	189	140	210
	Group B	N	STD	70.1	105	84.1	126	98.1	147	112	168	—	—	—	—
			SSLT	70.1	105	84.1	126	98.1	147	112	168	126	189	140	210
		X	STD	70.1	105	84.1	126	98.1	147	112	168	—	—	—	—
			SSLT	70.1	105	84.1	126	98.1	147	112	168	126	189	140	210
5 (L = 16)	Group A	N	STD/ SSLT	59.4	89.1	71.3	107	83.2	125	95.1	143	107	160	119	178
		X		59.4	89.1	71.3	107	83.2	125	95.1	143	107	160	119	178
	Group B	N		59.4	89.1	71.3	107	83.2	125	95.1	143	107	160	119	178
		X		59.4	89.1	71.3	107	83.2	125	95.1	143	107	160	119	178
4 (L = 13)	Group A	N	STD/ SSLT	48.8	73.1	58.5	87.8	68.3	102	78.0	117	87.8	132	93.5	141
		X		48.8	73.1	58.5	87.8	68.3	102	78.0	117	87.8	132	97.5	146
	Group B	N		48.8	73.1	58.5	87.8	68.3	102	78.0	117	87.8	132	97.5	146
		X		48.8	73.1	58.5	87.8	68.3	102	78.0	117	87.8	132	97.5	146
Weld Size				1/4		1/4		5/16		5/16		3/8		7/16	

STD = Standard holes
SSLT = Short-slotted holes transverse to direction of load
STD/SSLT = Standard holes or short-slotted holes transverse to direction of load
— Indicates that the plate thickness is greater than the maximum given in Table 10-9.
Tabulated values are grouped when available strength is independent of hole type.

N = Threads included
X = Threads excluded

Table 10-10b (continued)

Plate $F_y = 50$ ksi

Single-Plate Connections

$1\frac{1}{8}$-in.-diameter bolts

Bolt, Weld and Single-Plate Available Strengths, kips

n	Bolt Group	Thread Cond.	Hole Type	Plate Thickness, in.											
				$\frac{5}{16}$		$\frac{3}{8}$		$\frac{7}{16}$		$\frac{1}{2}$		$\frac{9}{16}$		$\frac{5}{8}$	
				ASD	LRFD	ASD	LRFD	ASD	LRFD	ASD	LRFD	ASD	LRFD	ASD	LRFD
3 ($L = 10$)	Group A	N	STD/ SSLT	38.1	57.1	45.7	68.6	53.3	80.0	60.9	91.4	64.9	97.6	64.9	97.6
		X		38.1	57.1	45.7	68.6	53.3	80.0	60.9	91.4	68.6	103	76.2	114
	Group B	N		38.1	57.1	45.7	68.6	53.3	80.0	60.9	91.4	68.6	103	76.2	114
		X		38.1	57.1	45.7	68.6	53.3	80.0	60.9	91.4	68.6	103	76.2	114
2 ($L = 7$)	Group A	N	STD/ SSLT	27.4	41.1	32.9	49.4	37.1	55.8	37.1	55.8	37.1	55.8	37.1	55.8
		X		27.4	41.1	32.9	49.4	38.4	57.6	43.9	65.8	46.8	70.2	46.8	70.2
	Group B	N		27.4	41.1	32.9	49.4	38.4	57.6	43.9	65.8	46.8	70.2	46.8	70.2
		X		27.4	41.1	32.9	49.4	38.4	57.6	43.9	65.8	49.4	74.0	54.8	82.3
Weld Size				$\frac{1}{4}$		$\frac{1}{4}$		$\frac{5}{16}$		$\frac{5}{16}$		$\frac{3}{8}$		$\frac{7}{16}$	

STD = Standard holes
SSLT = Short-slotted holes transverse to direction of load
STD/SSLT = Standard holes or short-slotted holes transverse to direction of load
— Indicates that the plate thickness is greater than the maximum given in Table 10-9.
Tabulated values are grouped when available strength is independent of hole type.

N = Threads included
X = Threads excluded

SINGLE-ANGLE CONNECTIONS

A single-angle connection is made with an angle on one side of the web of the beam to be supported, as illustrated in Figure 10-13. This angle is preferably shop-bolted or welded to the supporting member and field-bolted to the supported beam.

When the angle is welded to the support, adequate flexibility must be provided in the connection. As illustrated in Figure 10-13(c), the weld is placed along the toe and across the bottom of the angle with a return at the top per AISC *Specification* Section J2.2b. Note that welding across the entire top of the angle must be avoided as it would inhibit the flexibility and, therefore, the necessary end rotation of the connection. The performance of the resulting connection would not be as intended for simple shear connections.

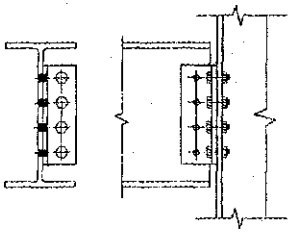

(a) All-bolted

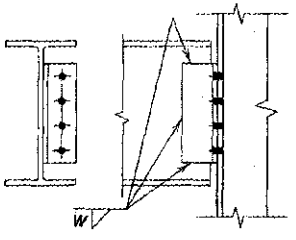

(b) Bolted/welded, angle welded to supported beam

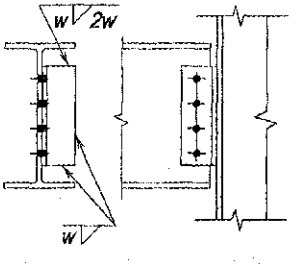

Note: weld return on top of angle per Specification Section J2.2b.

(c) Bolted/welded, angle welded to support

Fig. 10-13. Single-angle connections.

Design Checks

The available strength of a single-angle connection is determined from the applicable limit states for bolts (see Part 7), welds (see Part 8), and connecting elements (see Part 9). In all cases, the available strength, ϕR_n or R_n/Ω, must equal or exceed the required strength, R_u or R_a.

As illustrated in Figure 10-14, the effect of eccentricity must be considered in the angle leg attached to the supporting member. Additionally, eccentricity must be considered if the eccentricity exceeds 3 in. (to the face of the supporting member) or if a double vertical row of bolts through the web of the supported member is used. Eccentricity must be considered in the design of welds for single-angle connections. Holes in the angle leg to the supporting member must be standard holes. Holes in the angle leg to the supported member can be standard holes or horizontal short slots.

Recommended Angle Length and Thickness

To provide for stability during erection, it is recommended that the minimum angle length be one-half the T-dimension of the supported beam. The maximum length of the connection angle must be compatible with the T-dimension of an uncoped beam and the remaining web depth of a coped beam. Note that the angle may encroach upon the fillet(s) as given in Figure 10-3.

A minimum angle thickness of $^3/_8$-in. for $^3/_4$-in.- and $^7/_8$-in.-diameter bolts, and $^1/_2$-in. for 1-in.-diameter bolts should be used. A 4×3 angle is normally selected for a single angle welded to the support with the 3-in. leg being the welded leg.

Shop and Field Practices

Single-angle connections may be readily made to the webs of supporting girders and to the flanges of supporting columns. When framing to a column flange, provision must be made for possible mill variation in the depth of the column. Since the angle is usually shop-attached to the column flange, play in the open holes or horizontal slots in the outstanding angle leg may be used to provide the necessary adjustment to compensate for the mill variation. Attaching the angle to the column flange offers the advantage of side erection of the beam. The same is true for a girder web or truss support. Additionally, proper bay dimensions may be maintained without the need for shims. This advantage is lost when the angle is shop-attached to the supported beam web.

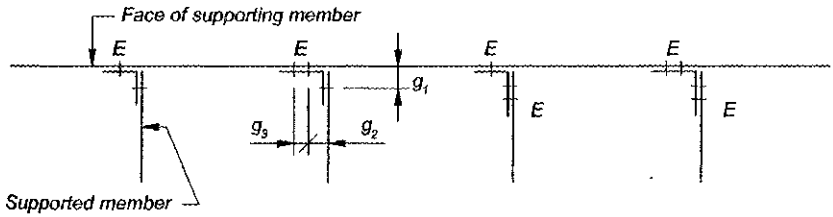

E indicates that eccentricity must be considered in this leg.
Gages g_1, g_2 and g_3 are workable gages as shown in Table 1-7A.

Fig. 10-14. Eccentricity in angles.

DESIGN TABLE DISCUSSION (TABLES 10-11 AND 10-12)

Table 10-11. All-Bolted Single-Angle Connections

Table 10-11 is a design aid for all-bolted single-angle connections. The tabulated eccentrically loaded bolt group coefficients, C, are used to determine the available strength, ϕR_n or R_n/Ω, where

$$R_n = Cr_n \tag{10-9}$$

$$\phi = 0.75 \qquad \Omega = 2.0$$

where

C = coefficient from Table 10-11

r_n = the nominal strength of one bolt in shear or bearing, kips

Table 10-12. Bolted/Welded Single-Angle Connections

Table 10-12 is a design aid for bolted/welded single-angle connections. Electrode strength is assumed to be 70 ksi and Group A bolts are used. In the rare case where a single-angle connection must be field-welded, erection bolts may be placed in the field-welded leg.

Weld available strengths are determined by the instantaneous center of rotation method using Table 8-10 with $\theta = 0°$. The tabulated values assume a half-web thickness of $^1/_4$ in. and may be used conservatively for lesser half-web thicknesses. For half-web thicknesses greater than $^1/_4$ in., the tabulated values should be reduced proportionally by an amount up to 8% at a half-web thickness of $^1/_2$ in. The tabulated minimum supporting flange or web thickness is the thickness that matches the strength of the support material to the strength of the weld material. In a manner similar to that illustrated previously for Table 10-2, the minimum material thickness (for one line of weld) is:

$$t_{min} = \frac{3.09D}{F_u} \tag{9-2}$$

where D is the number of sixteenths in the weld size. When welds line up on opposite sides of the support, the minimum thickness is the sum of the thicknesses required for each weld. In either case, when less than the minimum material thickness is present, the tabulated weld available strength should be multiplied by the ratio of the thickness provided to the minimum thickness.

Table 10-11
All-Bolted Single-Angle Connections

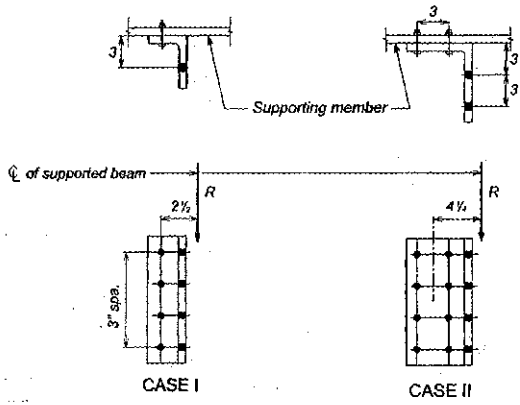

Note: standard holes in support leg of angle

Eccentrically Loaded Bolt Group Coefficients, *C*

Number of Bolts in One Vertical Row, *n*	Case I	Case II
12	11.4	21.5
11	10.4	19.4
10	9.37	17.3
9	8.34	15.2
8	7.31	13.0
7	6.27	10.9
6	5.22	8.70
5	4.15	6.63
4	3.07	4.70
3	1.99	2.94
2	1.03	1.61
1	—	0.518

$\phi R_n = C(\phi r_n)$ or $R_n/\Omega = C(r_n/\Omega)$

where

C = coefficient from Table above

ϕr_n = design strength of one bolt in shear or bearing, kips/bolt

r_n/Ω = allowable strength of one bolt in shear or bearing, kips/bolt

Notes:

For eccentricities less than or equal to those shown above, tabulated values may be used.

For greater eccentricities, coefficient C should be recalculated from Part 7.

Connection may be bearing-type or slip-critical.

Table 10-12
Bolted/Welded Single-Angle Connections

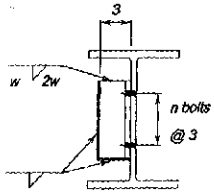

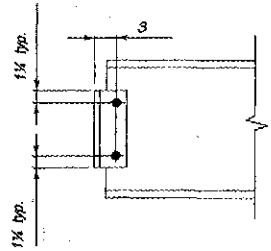

Number of Bolts in One Vertical Row	Bolt and Angle Strength, kips Group A Bolts				Angle Size (F_y = 36 ksi)	Angle Length, in.	Weld (70 ksi)			Minimum t_w of Supporting Member with Angles Both Sides of Web, in.
	3/4 in.		7/8 in.				Size, w, in.	Available Strength, kips		
	ASD	LRFD	ASD	LRFD				ASD	LRFD	
12	143	215	144	216	L4×3×3/8	35½	5/16	179	268	0.475
							1/4	143	214	0.380
							3/16	107	161	0.285
11	131	197	132	198		32½	5/16	165	247	0.475
							1/4	132	198	0.380
							3/16	98.8	148	0.285
10	119	179	120	180		29½	5/16	151	226	0.475
							1/4	121	181	0.380
							3/16	90.4	136	0.285
9	107	161	108	162		26½	5/16	137	205	0.475
							1/4	110	164	0.380
							3/16	82.2	123	0.285
8	95.5	143	95.6	143		23½	5/16	123	185	0.475
							1/4	98.5	148	0.380
							3/16	73.9	111	0.285
7	83.5	125	83.4	125		20½	5/16	109	164	0.475
							1/4	87.4	131	0.380
							3/16	65.6	98.4	0.285

Notes:

Gage in angle leg attached to beam web as well as leg width may be decreased. 3-in. welded leg may not be increased or decreased.

Tabulated weld available strengths are based on a 1/4-in. half web for the supported member. Smaller half webs will result in these values being conservative. For half webs over 1/4 in., weld values must be reduced proportionally by an amount up to 8% for a 1/2-in. half web or recalculated.

When the beam web thickness of the supporting member is less than the minimum and single-angle connections are back to back, either stagger the angles, or multiply the weld design strength by the ratio of the actual web thickness to the tabulated minimum thickness to determine the reduced weld design strength.

Table 10-12 (continued)
Bolted/Welded Single-Angle Connections

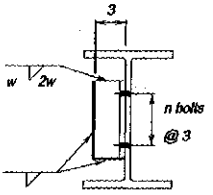

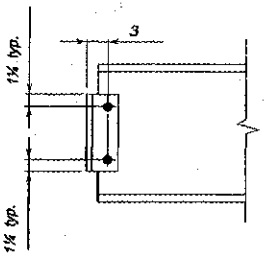

Number of Bolts in One Vertical Row	Bolt and Angle Strength, kips Group A Bolts				Angle Size (F_y = 36 ksi)	Angle Length, in.	Weld (70 ksi)			Minimum t_w of Supporting Member with Angles Both Sides of Web, in.
	3/4 in.		7/8 in.				Size, w, in.	Available Strength, kips		
	ASD	LRFD	ASD	LRFD				ASD	LRFD	
6	71.6	107	71.3	107	L4×3×5/8	17 1/2	5/16	94.3	141	0.475
							1/4	75.5	113	0.380
							3/16	56.6	84.9	0.285
5	59.7	89.5	59.1	88.7		14 1/2	5/16	79.1	119	0.475
							1/4	63.3	94.9	0.380
							3/16	47.4	71.2	0.285
4	47.6	71.4	47.0	70.4		11 1/2	5/16	62.9	94.4	0.475
							1/4	50.3	75.5	0.380
							3/16	37.8	56.6	0.285
3	35.5	53.2	34.8	52.2		8 1/2	5/16	45.7	68.5	0.475
							1/4	36.6	54.8	0.380
							3/16	27.4	41.1	0.285
2	23.3	35.0	22.7	34.0		5 1/2	5/16	28.2	42.2	0.475
							1/4	22.5	33.8	0.380
							3/16	16.9	25.3	0.285

Notes:

Gage in angle leg attached to beam web as well as leg width may be decreased. 3-in. welded leg may not be increased or decreased.

Tabulated weld available strengths are based on a 1/4-in. half web for the supported member. Smaller half webs will result in these values being conservative. For half webs over 1/4 in., weld values must be reduced proportionally by an amount up to 8% for a 1/2-in. half web or recalculated.

When the beam web thickness of the supporting member is less than the minimum and single-angle connections are back to back, either stagger the angles, or multiply the weld design strength by the ratio of the actual web thickness to the tabulated minimum thickness to determine the reduced weld design strength.

TEE CONNECTIONS

A tee connection is made with a structural tee, as illustrated in Figure 10-15. The tee is preferably shop-bolted or welded to the supporting member and field-bolted to the supported beam.

When the tee is welded to the support, adequate flexibility must be provided in the connection. As illustrated in Figure 10-15(b), line welds are placed along the toes of the tee flange with a return at the top per AISC *Specification* Section J2.2b. Note that welding across the entire top of the tee must be avoided as it would inhibit the flexibility and, therefore, the necessary end rotation of the connection. The performance of the resulting connection would not be as intended for simple shear connections.

Design Checks

The available strength of a tee connection is determined from the applicable limit states for bolts (see Part 7), welds (see Part 8), and connecting elements (see Part 9). In all cases, the available strength, ϕR_n or R_n/Ω, must equal or exceed the required strength, R_u or R_a.

Eccentricity must be considered when determining the available strength of tee connections. For a flexible support, the bolts or welds attaching the tee flange to the support must be designed for the shear, R_u or R_a. Also, the bolts through the tee stem must be designed for the shear and the eccentric moment, $R_u a$ or $R_a a$, where a is the distance from the face of the support to the centroid of the bolt group through the tee stem.

For a rigid support, the bolts or welds attaching the tee flange to the support must be designed for the shear and the eccentric moment; the bolts through the tee stem must be designed for the shear.

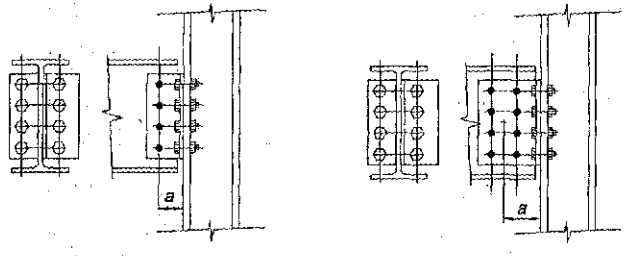

(a) All-bolted

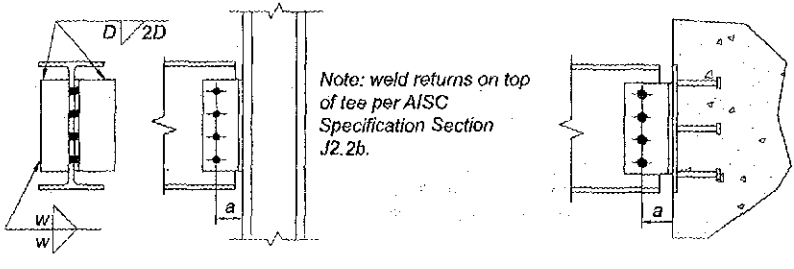

(b) Bolted/welded

Fig. 10-15. Tee connections.

Recommended Tee Length and Flange and Web Thicknesses

To provide for stability during erection, it is recommended that the mimimum tee length be one-half the T-dimension of the beam to be supported. The maximum length of the tee must be compatible with the T-dimension of an uncoped beam and the remaining web depth, exclusive of fillets, of a coped beam. Note that the tee may encroach upon the fillet(s) as given in Figure 10-3.

To provide for flexibility, the tee selected should meet the ductility checks illustrated in Part 9. The flange thickness of tees used in simple shear connections should be held to a minimum to permit the flexure necessary to accommodate the end rotation of the beam, unless the tee stem connection is proportioned to meet the geometric requirements for single-plate connections.

Shop and Field Practices

When framing to a column flange, provision must be made for possible mill variation in the depth of the columns. If the tee is shop-attached to the column flange, play in the open holes usually furnishes the necessary adjustment to compensate for the mill variation. This approach offers the advantage of side erection of the beam. Alternatively, if the tee is shop-attached to the supported beam web, the beam length could be shortened to provide for mill overrun and shims could be furnished at the appropriate intervals to fill the resulting gaps or to provide for mill underrun.

When a single vertical row of bolts is used in a tee stem, a 4-in. or 5-in. stem is required to accommodate the end distance of the supported beam and possible overrun/underrun in beam length. A double vertical row of bolts will require a 7-in. or 8-in. tee stem. There is no maximum limit on L_{eh} for the tee stem.

SHEAR SPLICES

Shear splices are usually made with a single plate, as shown in Figure 10-16(a), or two plates, as shown in Figures 10-16(b) and 10-16(c). Although the rotational flexibility required at a shear splice is usually much less than that required at the end of a simple-span beam, when a highly flexible splice is desired, the splice utilizing four framing angles, shown in Figure 10-17, is especially useful. These shear splices may be bolted and/or welded.

The available strength of a shear splice is determined from the applicable limit states for the bolts (see Part 7), welds (see Part 8), and connecting elements (see Part 9). In all cases, the available strength, ϕR_n or R_n/Ω, must equal or exceed the required strength, R_u or R_a.

Eccentricity must be considered in the design of shear splices, with the exception of all-bolted shear splices utilizing four framing angles, as illustrated in Figure 10-17. When the splice is symmetrical, as shown for the bolted splice in Figure 10-16(a), each side of the splice is equally restrained regardless of the relative flexibility of the spliced members. Accordingly, as illustrated in Figure 10-18, the eccentricity of the shear to the center of gravity of either bolt group is equal to half the distance between the centroids of the bolt groups. Therefore, each bolt group can be designed for the shear, R_u or R_a, and one-half the eccentric moment, $R_u e$ or $R_a e$ (Kulak and Green, 1990). This approach is also applicable to symmetrical welded splices.

When the splice is not symmetrical, as shown in Figures 10-16(b) and 10-16(c), one side of the splice will possess a higher degree of rigidity. For the splice shown in Figure 10-16(b),

the right side is more rigid because the stiffness of the weld group exceeds the stiffness of the bolt group, even if the bolts are pretensioned or slip-critical. Also, for the splice shown in Figure 10-16(c), the right side is more rigid since there are two vertical rows of bolts while the left side has only one. In these cases, it is conservative to design the side with the higher rigidity for the shear, R_u or R_a, and the full eccentric moment, $R_u e$ or $R_a e$. The side with the lower rigidity can then be designed for the shear only. This approach is applicable regardless of the relative flexibility of the spliced members.

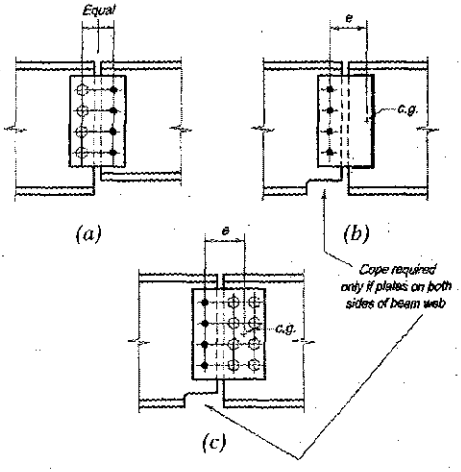

Fig. 10-16. Plate-type shear splices.

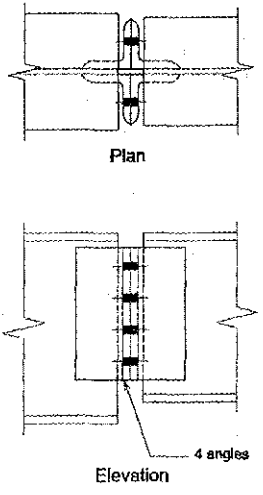

Fig. 10-17. Angle-type shear splice.

Some splices, such as those that occur at expansion joints, require special attention and are beyond the scope of this Manual.

SPECIAL CONSIDERATIONS FOR SIMPLE SHEAR CONNECTIONS

Simple Shear Connections Subject to Axial Forces

When simple shear connections are subjected to axial load in addition to the shear, the important limit states are outstanding angle leg bending and prying action. These tend to require that the angle, plate or flange thickness increase or the gage decrease, or both, and these requirements may compromise the connection's ability to remain flexible enough to accommodate the simple beam end rotation. The shear connection rotational ductility checks derived in Part 9 can be used to ensure that adequate ductility exists.

Simple Shear Connections at Stiffened Column-Web Locations

Stiffeners are obstacles to direct connections to the column web. Figure 10-19(a) illustrates a seat angle welded to the toes of the column flanges; Figure 10-19(d) shows a vertical plate extended beyond the column flanges. Figures 10-19(b) and 10-19(c) offer two additional options for framing at locations of diagonal stiffeners; these should be examined carefully as they may create erection problems. Additionally, the deep cope of Figure 10-19(c) may significantly reduce the available strength of the beam at the end connection. Alternatively, the bottom transverse stiffener could be extended to serve as a seat plate with a bearing stiffener provided to distribute the beam reaction.

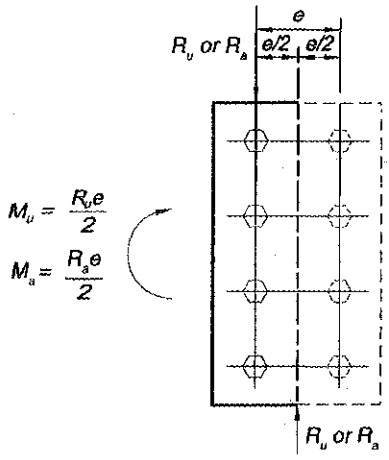

Fig. 10-18. Eccentricity in a symmetrical shear splice.

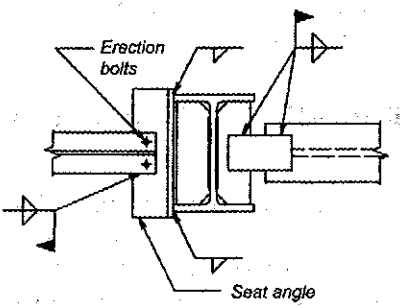

SECTION A-A

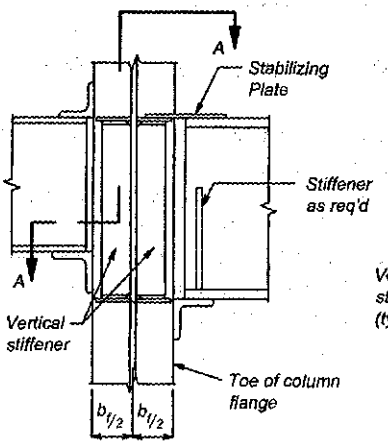

(a)

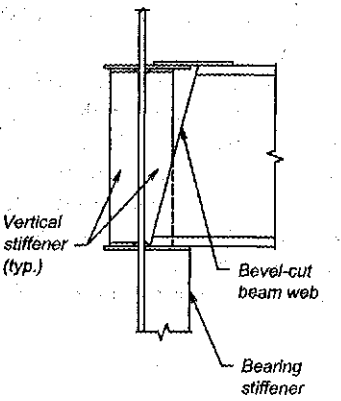

(b)

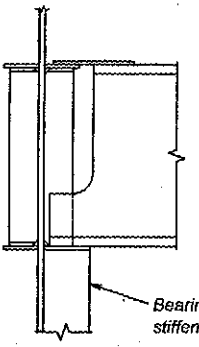

(c)

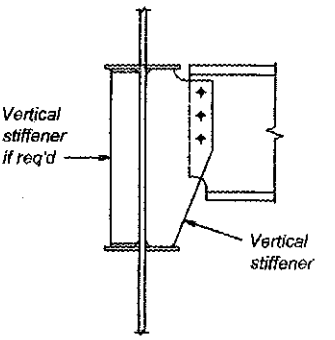

(d)

Fig. 10-19. Simple shear connections at stiffened column-web locations.

Eccentric Effect of Extended Gages

Consider a simple shear connection to the web of a column that requires transverse stiffeners for two concurrent beam-to-column-flange moment connections. If it were not possible to eliminate the stiffeners by selection of a heavier column section, the field connection would have to be located clear of the column flanges, as shown in Figure 10-20, to provide for access and erectability.

The extension of the connection beyond normal gage lines results in an eccentric moment. While this eccentric moment is usually neglected in a connection framing to a column flange, the resistance of the column to weak-axis bending is typically only 20% to 50% of that in the strong axis. Thus the eccentric moment should be considered in this column-web connection, especially if the eccentricity, e, is large. Similarly, eccentricities larger than normal gages may also be a concern in connections to girder webs.

Column-Web Supports

There are two components contributing to the total eccentric moment: (1) the eccentricity of the beam end reaction, Re; and (2) M_{pr}, the partial restraint of the connection. To determine what eccentric moment must be considered in the design, first assume that the column is part of a braced frame for weak-axis bending, is pinned-ended with $K = 1$, and will be concentrically loaded, as illustrated in Figure 10-21. The beam is loaded before the column and will deflect under load as shown in Figure 10-22. Because of the partial restraint of the connection, a couple, M_{pr}, develops between the beam and column and adds to the eccentric couple, Re. Thus, $M_{con} = Re + M_{pr}$.

As the loading of the column begins, the assembly will deflect further in the same direction under load, as indicated in Figure 10-23, until the column load reaches some magnitude, P_{sbr}, when the rotation of the column will equal the simply supported beam end rotation. At this load, the rotation of the column negates M_{pr} since it also relieves the partial restraint effect of the connection, and $M_{con} = Re$. As the column load is increased above P_{sbr}, the column rotation exceeds the simply supported beam end rotation and a moment M'_{pr} results such that $M_{con} = Re - M'_{pr}$.

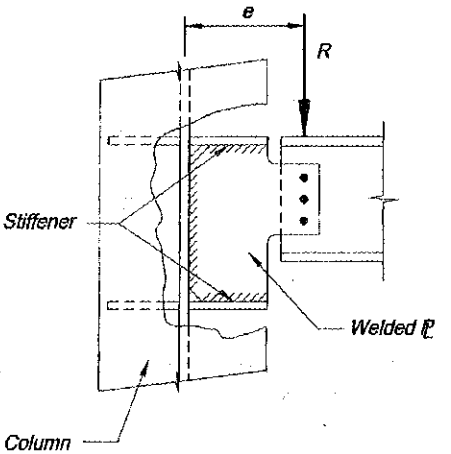

Fig. 10-20. Eccentric effect of extended gages.

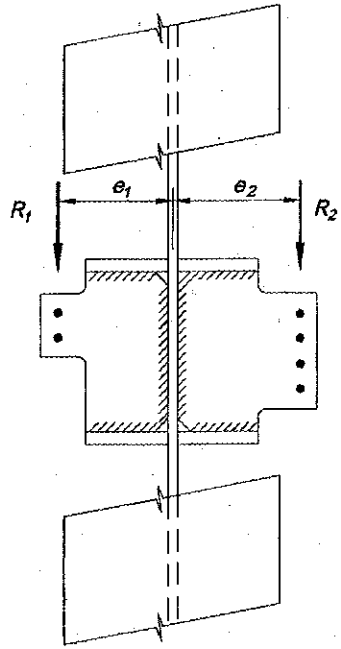

Fig. 10-21. Column subject to dual eccentric moments.

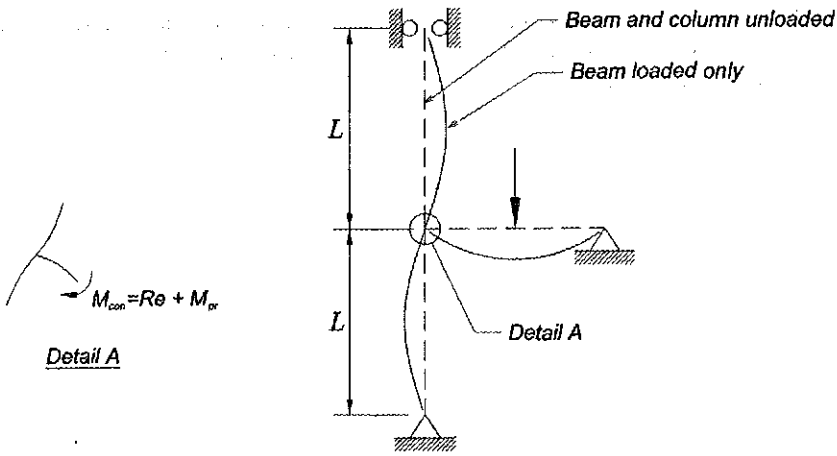

Fig. 10-22. Illustration of beam, column and connection behavior under loading of beam only.

Note that the partial restraint of the connection now actually stabilizes the column and reduces its effective length factor, K, below the originally assumed value of 1. Thus, since M'_{pr} must be greater than zero, it must also be true that $Re > M_{con}$. It is therefore conservative to design the connection for the shear, R, and the eccentric moment, Re.

The welds connecting the plate to the supporting column web should be designed to resist the full shear, R, only; the top and bottom plate-to-stiffener welds have minimal strength normal to their length, are not assumed to carry any calculated force, and may be of minimum size in accordance with AISC *Specification* Section J2.

If simple shear connections frame to both sides of the column web, as illustrated in Figure 10-21, each connection should be designed for its respective shear, R_1 and R_2, and the eccentric moment $|R_2e_2 - R_1e_1|$ may be apportioned between the two simple shear connections as the designer sees fit. The total eccentric moment may be assumed to act on the larger connection, the moment may be divided proportionally among the connections according to the polar moments of inertia of the bolt groups (relative stiffness), or the moment may be divided proportionally between the connections according to the section moduli of the bolt groups (relative moment strength). If provision is made for ductility and stability, it follows from the lower bound theorem of limit states analysis that the distribution which yields the greatest strength is closest to the true strength. Note that the possibility exists that one of the beams may be devoid of live load at the same time that the opposite beam is fully loaded. This condition must be considered by the designer when apportioning the moment.

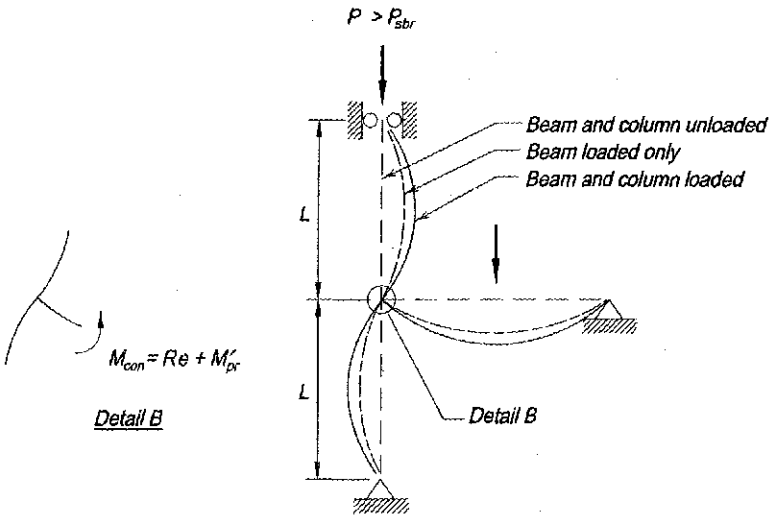

Fig. 10-23. Illustration of beam, column and connection behavior under loading of beam and column.

Girder-Web Supports

The girder-web support of Figure 10-24 usually provides only minimal torsional stiffness or strength. When larger-than-normal gages are used, the end rotation of the supported beam will usually be accommodated through rotation of the girder support. It follows that the bolt group should be designed to resist both the shear, R, and the eccentric moment, Re. The beam end reaction will then be carried through to the center of the supporting girder web.

The welds connecting the plate to the supporting girder web should be designed to resist the shear, R, only; the top and bottom plate-to-girder-flange welds have minimal strength normal to their length, are not assumed to carry any calculated force, and may be of minimum size in accordance with AISC *Specification* Section J2.

Similarly, for the girder illustrated in Figure 10-25 supporting two eccentric reactions, each connection should be designed for its respective shear, R_1 and R_2, and the eccentric moment, $|R_2e_2 - R_1e_1|$, may be apportioned between the two simple shear connections as the designer sees fit.

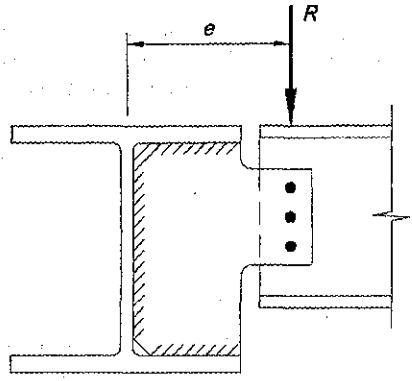

Fig. 10-24. Eccentric moment on girder-web support.

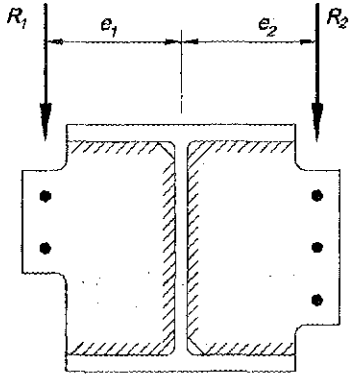

Fig. 10-25. Girder-web support subject to dual eccentric moments.

Alternative Treatment of Eccentric Moment

In the foregoing treatment of eccentric moments with column- and girder-web supports, it is possible to design the support (instead of the connection) for the eccentric moment, *Re*. Additionally, when metal deck is used with puddle welds or self-tapping screws, the metal deck tends to reduce relative movement between the two members and thus will tend to carry all or some of the eccentric moment. In these cases, the connection may be designed for the shear, *R*, only or the shear and a reduced eccentric moment.

Double Connections

When beams frame opposite each other and are welded to the web of the supporting girder or column, there are usually no dimensional constraints imposed on one connection by the presence of the other connection unless erection bolts are common to each connection. When the connections are bolted to the web of the supporting column or girder, however, the close proximity of the connections requires that some or all fasteners be common to both connections. This is known as a double connection. See also the discussion under "Constructability Considerations" in an earlier section in this Part.

Supported Beams of Different Nominal Depths

When beams of different nominal depths frame into a double connection, care must be taken to avoid interference from the bottom flange of the shallower beam with the entering and tightening clearances for the bolts of the connection for the deeper beam. Access to the bolts that will support the deeper beam may be provided by coping or blocking the bottom flange of the shallower beam. Alternatively, stagger may be used to favorably position the bolts around the bottom flange of the shallower beam.

Supported Beams Offset Laterally

Frequently, beams do not frame exactly opposite each other, but are offset slightly, as illustrated in Figure 10-26. Several connection configurations are possible, depending on the offset dimension.

If the offset were equal to the gage on the support, the connection could be designed with all bolts on the same gage lines, as shown in Figure 10-26(b), and the angles arranged, as shown in Figure 10-26(d). If the offset were less than the gage on the support, staggering the bolts, as shown in Figure 10-26(c), would reduce the required gage and the angles could be arranged, as shown in Figure 10-26(c). In any case, each bolt transmits an equal share of its beam reaction(s) to the supporting member, with the bolts that are loaded in double shear ultimately carrying twice as much force as those loaded in single shear. Once the geometry of the connection has been determined, the distribution of the forces is patterned after that in the design of a typical connection. For normal gages, eccentricity may be ignored in this type of connection.

Beams Offset From Column Centerline

Framing to the Column Flange from the Strong Axis

As illustrated in Figure 10-27, beam-to-column-flange connections offset from the column centerline may be supported on a typical welded seat, stiffened or unstiffened, provided the welds for the seat can be spaced approximately equal on either side of the beam centerline.

Two such seats offset from the W12×65 column centerline by $2^1/_4$ in. and $3^1/_2$ in. are shown in Figures 10-27(a) and 10-27(b), respectively. While not shown, top angles should be used with this connection.

Since the entire seat fits within the flange width of the column, the connection of Figure 10-27(a) is readily selected from the design aids presented previously. However, the larger

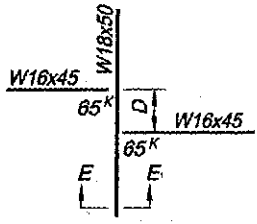

PART PLAN
(Beam flush top)

(a)

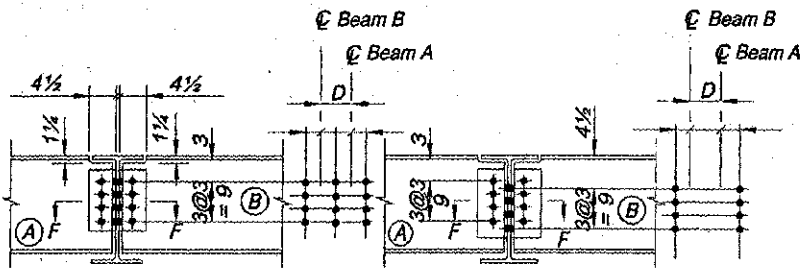

SECTION E - E
Bolts on same gage

(b)

SECTION E - E
Bolts staggered

(c)

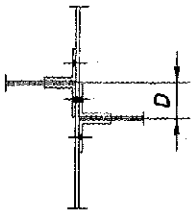

SECTION F - F
Bolts on same gage

(d)

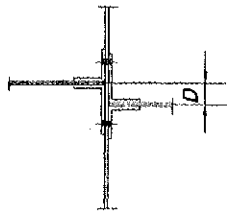

SECTION F - F
Bolts staggered

(e)

Fig. 10-26. Offset beams connected to girder.

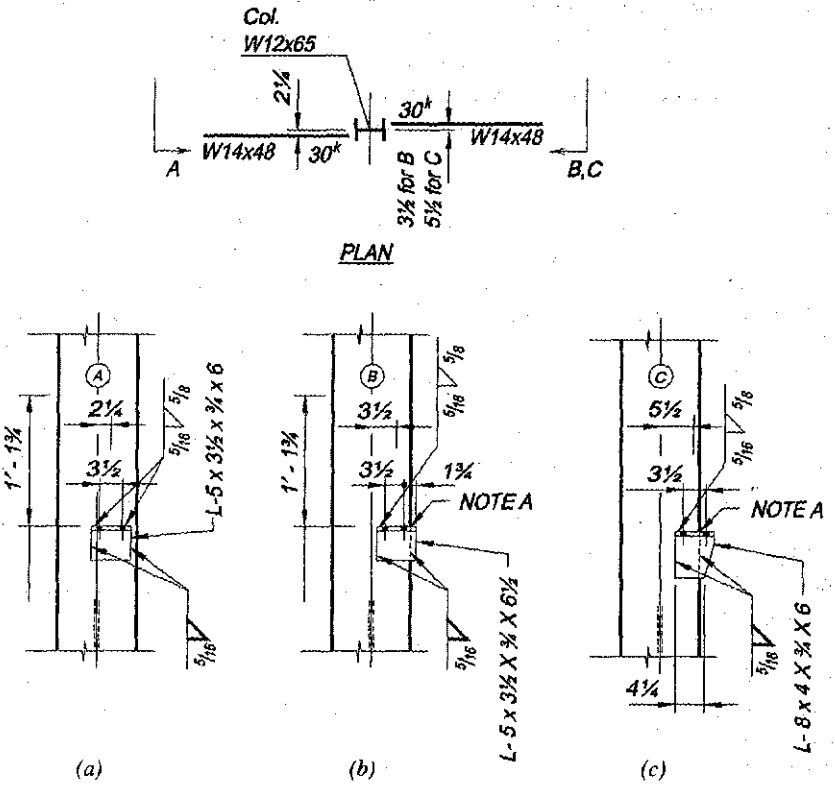

NOTE A

End return is omitted because the AWS Code does not permit weld returns to be carried around the corner formed by the column flange toe and seat angle heel.

NOTE B

Beam and top angle not shown for clarity.

Fig. 10-27. Offset beams connected to column flanges.

beam offsets in Figures 10-27(b) and 10-27(c) require that one of the welds be made along the edge of the column flange against the back side of the seat angle. Note that the end return is omitted because weld returns should not be carried around such a corner.

For the beam offset of 5½ in. shown in Figure 10-27(c), the seat angle overhangs the edge of the beam and the horizontal distance between the vertical welds is reduced to 3½ in.; the center of gravity of the weld group is located 1¼ in. to the left of the beam centerline. The force on each weld may be determined by statics. In this case, the larger force is in the right-hand weld and may be determined by summing moments about the lefthand weld. Once the larger force has been determined, each weld should be designed to share the force in the more highly loaded weld.

Framing to the Column Flange from the Weak Axis

Spandrel beams X and Y in the partial plan shown in Figure 10-28 are offset 4⅛ in. from the centerline of column C1, permitting the beam web to be connected directly to the column flange. At column B2, spandrel beam X is offset 5 in. and requires a ⅞-in. filler between the beam web and the column flange. Beams X and Y are both plain-punched beams, with flange cuts on one side, as noted in Figure 10-28(a), Section F-F.

In establishing gages, the requirements of other connections to the column at adjacent locations must be considered. While the workable flange gage is 3½ in. for the W8×28 columns supporting the spandrel beams, for beams Z, the combination of a 4-in. column gage and 1½-in. stagger of fasteners is used to provide entering and tightening clearance for the field bolts and sufficient edge distance on the column flange, as illustrated in Figure 10-28(b). The 4-in. column gage also permits a 1½-in. edge distance at the ends of the spandrel beams, which will accommodate the normal length tolerance of ±¼ in. as specified in "Standard Mill Practice" in Part 1.

The spandrel beams are shown with the notation "Cut and Grind Flush FS" in Sections E-E and F-F. This cut permits the beam web to lie flush against the column flange. The uncut flange on the near side of the spandrel beam contributes to the stiffness of the connection. The 2½×⅞-in. filler is required between the spandrel beam web and the flange of column B2 because of the ⅞-in. offset. Accordingly, the filler provisions of AISC *Specification* Section J5 must be satisfied.

In the part plan in Figure 10-29(a), the W16×40 beam is offset 6¼ in. from the centerline of column D1. This prevents the web of the W16×40 from being placed flush against the side of the column flange. A plate and filler are used to connect the beam to the column flange, as shown in Figure 10-29(b). Such a connection is eccentric and one group of fasteners must be designed for the eccentricity. Lack of space on the inner flange face of the column requires development of the moment induced by the eccentricity in the beam web fasteners.

To minimize the number of field fasteners, the plate in this case is shop-bolted to the beam and field-bolted to the column. A careful check must be made to ensure that the beam can be erected without interference from fittings on the column web. Some fabricators would elect to shop-attach the plate to the column to eliminate possible interference and permit use of plain-punched beams. Additionally, if the column were a heavy section, the fabricator may elect to shop-weld the plate to the column to avoid drilling the thick flanges. The welding of this plate to the column creates a much stiffer connection and the design should be modified to recognize the increased rigidity.

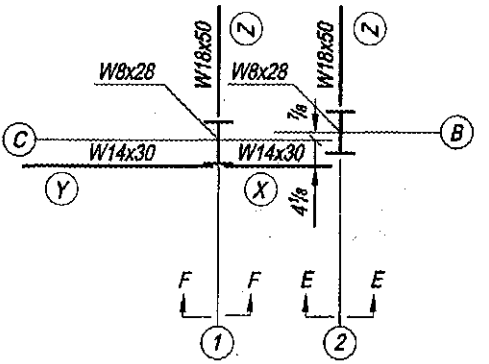

PART PLAN
Beams flush top

PART COLUMN DETAILS
C1 and B2

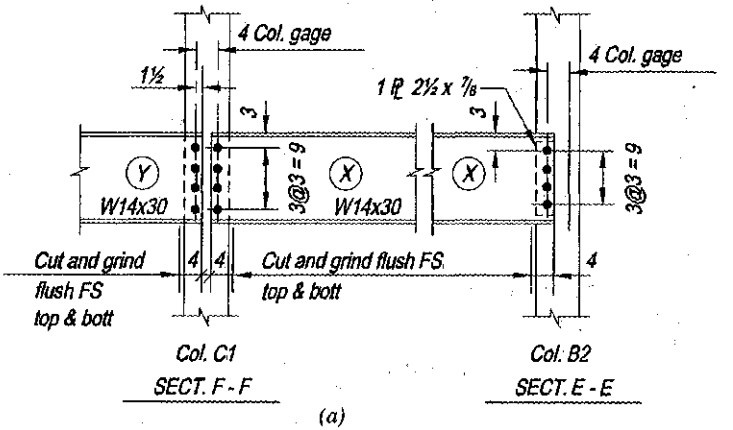

(a)

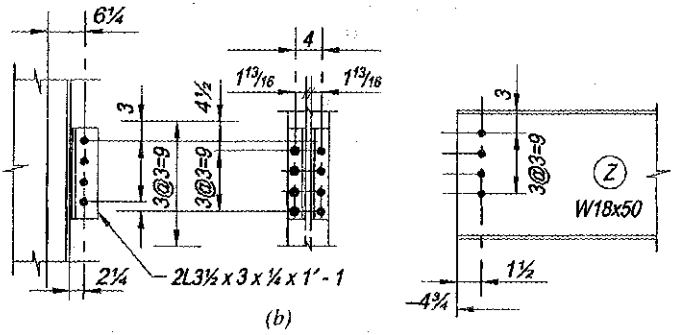

(b)

Fig. 10-28. Offset beams connected to column.

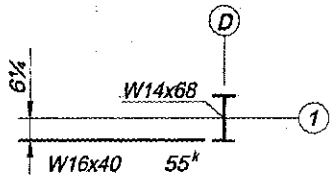

PART PLAN

(a)

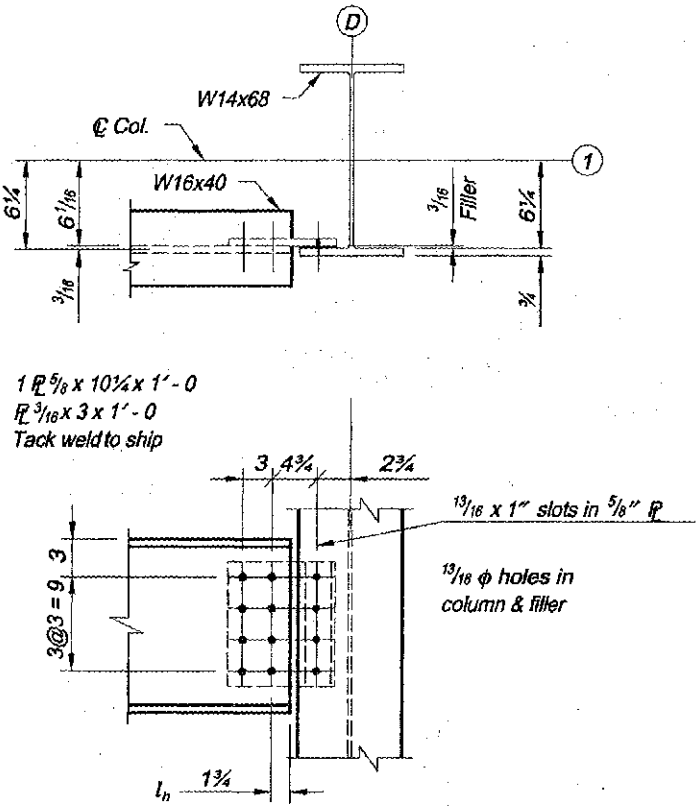

(b)

Fig. 10-29. Offset beam connected to column.

If the centerline of the W16 were offset $6^{1}/_{16}$ in. from line 1, it would be possible to cope or cut the flanges flush top and bottom and frame the web directly to the column flange with details similar to those shown in Figure 10-29. This type of framing also provides a connection with more rigidity than normally contemplated in simple construction. A coped connection of this type would create a bending moment at the root of the cope that might require reinforcement of the beam web.

One method frequently adopted to avoid moment transfer to the column because of beam connection rigidity is to use slotted holes and a bearing connection to provide some flexibility. The slotted holes would be provided in the connection plate only and would be in the field connection only. These slotted connections also would accommodate fabrication and erection tolerances.

The type of connection detailed in Figure 10-29 is similar to a coped beam and should be checked for buckling, as illustrated in Part 9. The following differences are apparent and should be recognized in the analysis:

1. The effective length of equivalent "cope" is longer by the amount of end distance to the first bolt gage line.
2. There is an inherent eccentricity due to the beam web and plate thickness. The ordinary web and plate thicknesses normally will not require an analysis for this condition, since the inelastic rotation allowed by the AISC *Specification* will relieve this secondary moment effect. Two plates may sometimes be required to counter this eccentricity when dimensions are significant.
3. The connection plate can be made of sufficient thickness as required for bending or buckling stresses with a minimum thickness of $^{3}/_{8}$ in.

Framing to the Column Web

If the offset of the beam from the centerline of the column web is small enough that the connection may still be centered on or under the supported beam, no special considerations need be made. However, when the offset of the beam is too large to permit the centering of the connection under the beam, as in Figure 10-30, it may be necessary to consider the effect of eccentricity in the fastener group.

The offset of the beam in Figure 10-30 requires that the top and bottom flanges be blocked to provide erection clearance at the column flange. Since only half of each flange, then, remains in which to punch holes, a 6-in. outstanding leg is used for both the seat and top angles of these connections; this permits the use of two field bolts to each of the seat and top angles, which are required by OSHA.

Connections for Raised Beams

When raised beams are connected to column flanges or webs, there is usually no special consideration required. However, when the support is a girder, the differing tops of steel may preclude the use of typical connections. Figure 10-31 shows several typical details commonly used for such cases in bolted construction. Figure 10-32 shows several typical details commonly used in welded construction.

In Figure 10-31(a), since the top of the W12×35 is located somewhat less than 12 in. above the top of the W18 supporting beam, a double-angle connection is used. This

connection would be designed for the beam reaction and the shop bolts would be governed by double shear or bearing, just as if they were located in a vertical position. However, the field bolts are not required to carry any calculated force under gravity loading.

The maximum permissible distance, m, depends on the beam reaction, since the web remaining after the bottom cope must provide sufficient area to resist the vertical shear as well as the bending moment which would be critical at the end of the cope. The beam can be reinforced by extending the angles beyond the cope and adding additional shop bolts for development. The angle size and/or thickness can be increased to gain shear area or section modulus, if required. The effect of any eccentricity would be a matter of judgment, but could be neglected for small dimensions.

When this connection is used for flexure or for dynamic or cyclical loading, the web is subjected to high stress concentrations at the end of the cope, and it is good practice to extend the angles, as shown in Figure 10-31(a), to add at least two additional web fasteners.

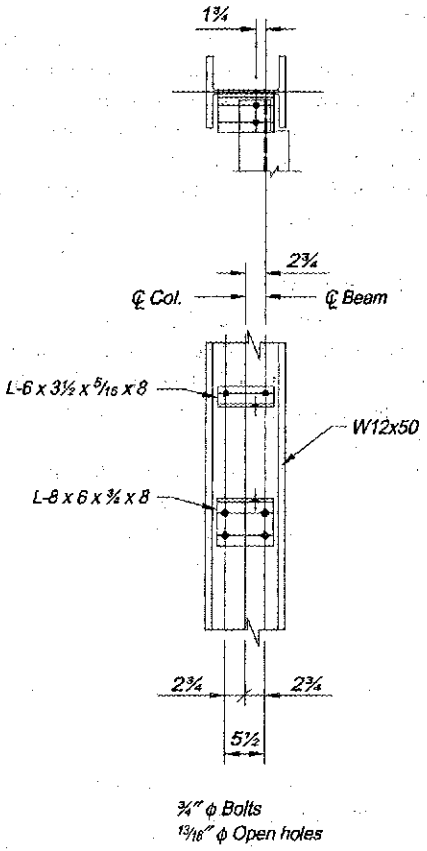

Fig. 10-30. Offset beam connected to column web.

Figure 10-31(b) covers the case where the bottom flange of the W12x35 is located a few inches above the top of the W18. The beam bears directly upon fillers and is connected to the W18 by four field bolts which are not required to transmit a calculated gravity load. If the distance *m* exceeds the thickest plate which can be punched, two or more plates may be used. Even though the fillers in this case need only be 6½-in. square, the amount of material required increases rapidly as *m* increases. If *m* exceeds 2 or 3 in., another type of detail may be more economical.

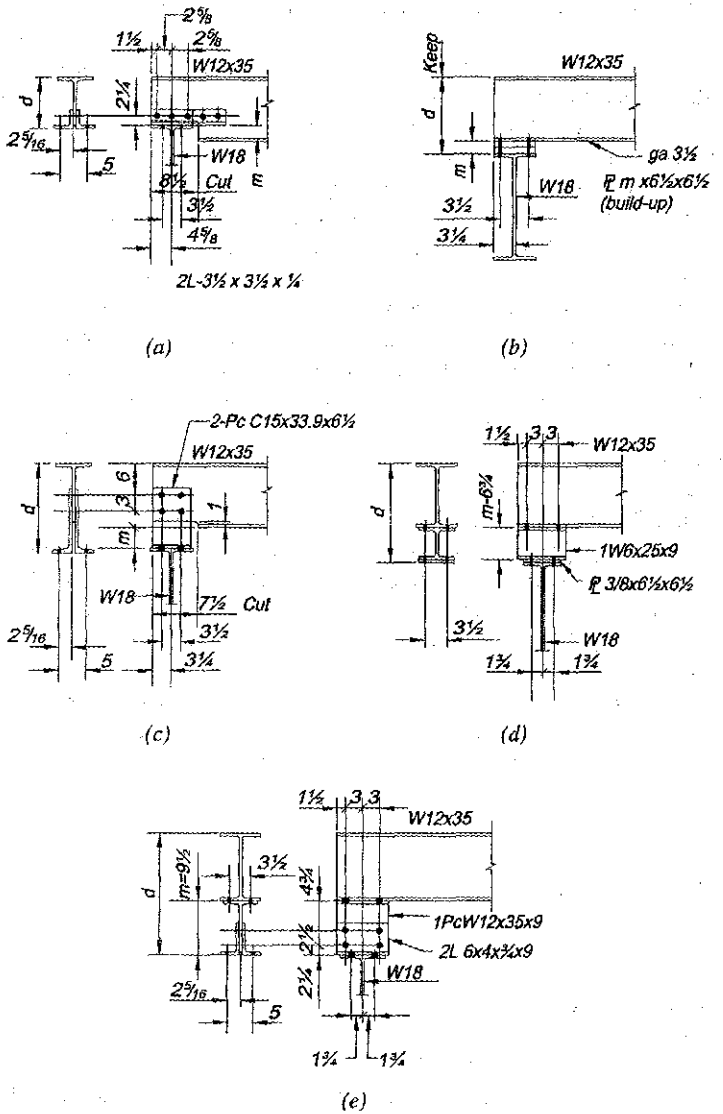

Fig. 10-31. Bolted raised-beam connections.

The detail shown in Figure 10-31(c) is used frequently when m is up to 6 or 7 in. The load on the shop bolts in this case is no greater than that in Figure 10-31(a). However, to provide more lateral stiffness, the fittings are cut from a 15-in. channel and are detailed to overlap the beam web sufficiently to permit four shop bolts on two gage lines.

A stool or pedestal, cut from a rolled shape, can be used with or without fillers to provide for the necessary m distance, as in Figure 10-31(d). A pair of connection angles and a tee will also serve a similar purpose, as shown in Figure 10-31(e). To provide adequate strength to carry the beam end reaction and to provide lateral stiffness, the web thickness of the pedestal in each of these cases should be at least as thick as the member being supported.

In Figure 10-32(a), welded framing angles are substituted for the bolted angles of Figure 10-31(a). In Figure 10-32(b), a single horizontal plate is shown replacing the pair of framing angles; this results in a savings in material and the amount of shop-welding. In this case, particular care must be taken in cutting the beam web and positioning the plate at right angles to the beam web. For this reason, if only a few connections of this type are to be made, some fabricators prefer to use the angles, as in Figure 10-32(a). If sufficient duplication were available to warrant making a simple jig to position the plate during welding, the solution of Figure 10-32(b) may be economical.

Figure 10-32(c) shows a tee centered on the beam web and welded to the bottom flange of the beam. The tee stem thickness should not be less than the beam web thickness. The welded solutions shown in Figures 10-32(d) and 10-32(e) are capable of providing good lateral stiffness. The latter two types also permit end rotation as the beam deflects under load. However, if the m distance exceeds 3 or 4 in., it is advisable to shop-weld a triangular bracket plate at one end of the beam, as indicated by the dashed lines, to prevent the beam from deflecting along its longitudinal axis.

Other equally satisfactory details may be devised to meet the needs of connections for raised beams. They will vary depending on the size of the supported beam and the distance m. When using this type of connection where the load is transmitted through bearing, the provisions of AISC *Specification* Sections J10.2 and J10.3 must be satisfied for both the supported and supporting members. For the detail of Figure 10-32(b), since the rolled fillet has been removed by the cut, the value of k would be taken as the thickness of the plate plus the fillet weld size.

AISC *Specification* Appendix 6 requires stability and restraint against rotation about the beam's longitudinal axis. This provision is most easily accomplished with a floor on top of the supported beam. In the absence of a floor, the top flange may be supported by a strut or bracket attached to the supporting member. When the beam is encased in a wall, this stability may also be provided with wall anchors.

This discussion has considered that the field bolts which attach the beam to the pedestal or support beam are subject to no calculated load. It is important, however, to recognize that when the beam deflects about its neutral axis, a tensile force can be exerted on the outside bolts. The intensity of this tensile force is a function of the dimension d, indicated in Figure 10-31, the span length of the supported member, and the beam stiffness. If these forces are large, high-strength bolts should be used and the connection analyzed for the effects of prying action.

Raised-beam connections such as these are used frequently as equipment or machinery supports where it is important to maintain a true and level surface or elevation. When this tolerance becomes important, the dimension d should be noted "keep" to advise the fabricator of this importance, as shown in Figure 10-31(b). Since the supporting beam is

subject to certain camber/deflection tolerances, it also may be appropriate to furnish shim packs between the connection and the supporting member.

Non-Rectangular Simple Shear Connections

It is often necessary to design connections for beams that do not frame into a support orthogonally. Such a beam may be inclined with respect to the supporting member in

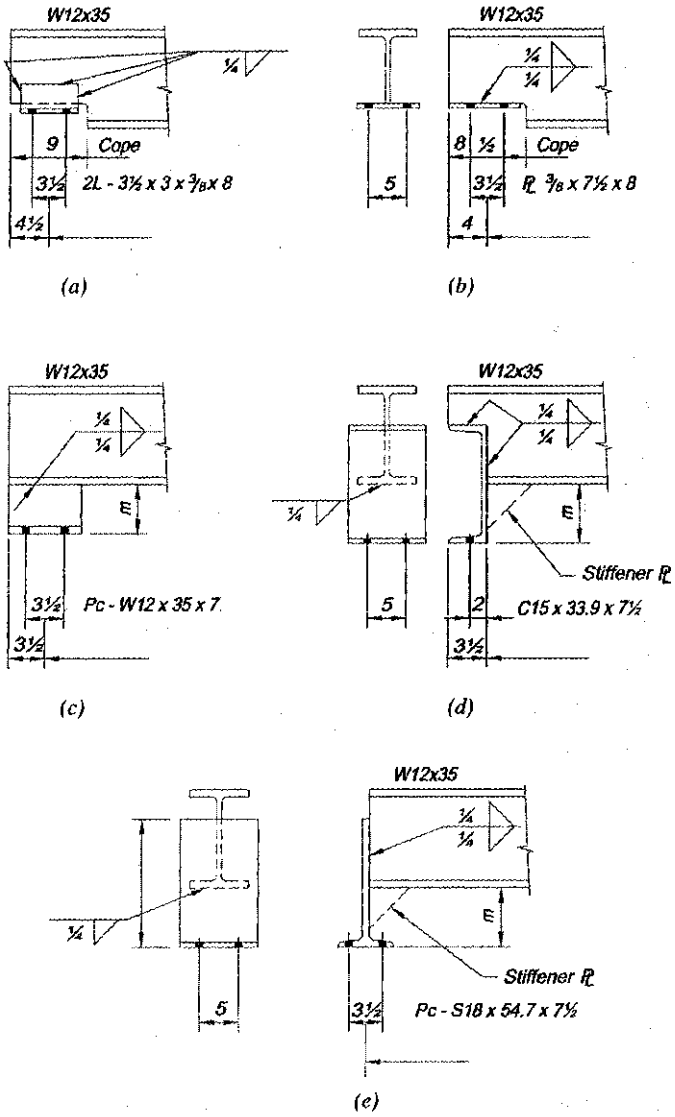

Fig. 10-32. Welded raised-beam connections.

various directions. Depending upon the relative angular position which a beam assumes, the connection may be classified among three categories: skewed, sloped or canted. These conditions are illustrated in Figure 10-33 for beam-to-girder web connections; the same descriptions apply to beam-to-column-flange and web connections. Additionally, beams may be oriented in a combination of any or all of these conditions. For any condition of skewed, sloped or canted framing, the single-plate connection is generally the simplest and most economical of those illustrated in this text.

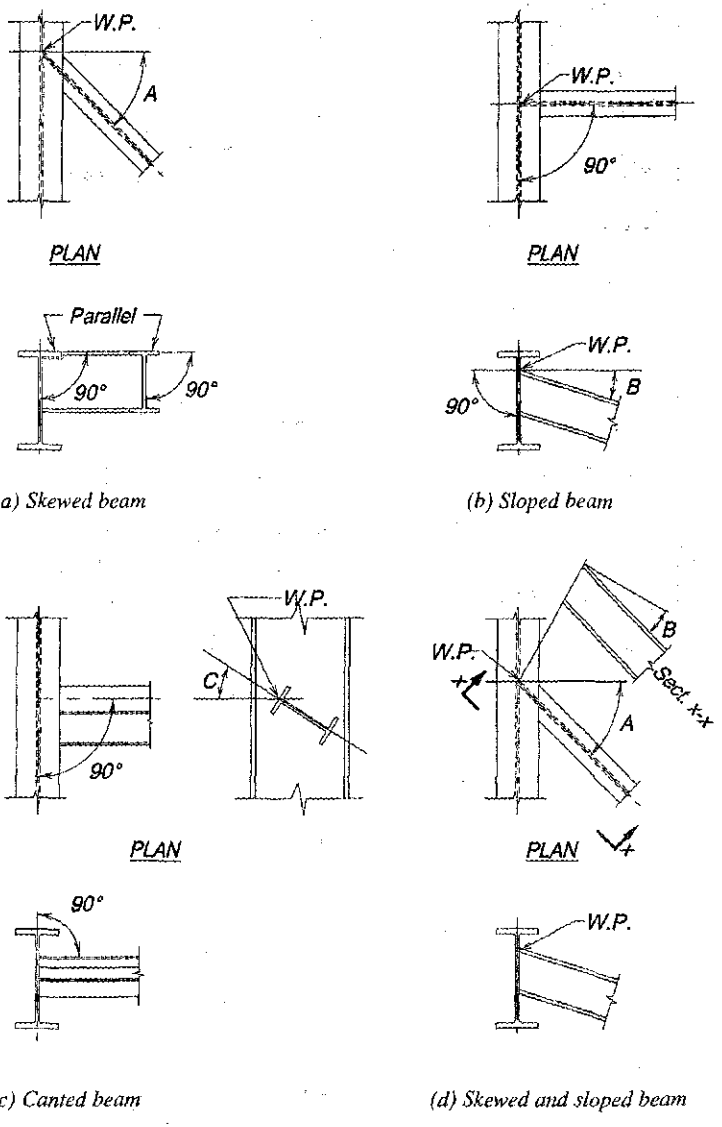

Fig. 10-33. Non-rectangular connections.

Skewed Connections

A beam is said to be skewed when its flanges lie in a plane perpendicular to the plane of the face of the supporting member, but its web inclined to the face of the supporting member. The angle of skew A appears in Figure 10-33(a) and represents the horizontal bevel to which the fittings must be bent or set, or the direction of gage lines on a seated connection.

When the skew angle is less than 5° (1-in-12 slope), a pair of double angles can be bent inward or outward to make the connection, as shown in Figure 10-34. While bent angle sections are usually drawn as bending in a straight line from the heel, rolled angles will tend to bend about the root of the fillet (dimension k in Manual Part 1). This produces a significant jog in the leg alignment, which is magnified by the amount of bend. Above this angle of skew, it becomes impractical to bend rolled angles.

For skews approximately greater than 5° (1-in-12 slope), a pair of bent plates, shown in Figure 10-35, may be a more practical solution. Bent plates are not subject to the deformation problem described for bent angles, but the radius and direction of the bend must be considered to avoid cracking during the cold-bending operation.

Bent plates exhibit better ductility when bent perpendicular to the rolling direction and are, therefore, less likely to crack. Whenever possible, bent connection plates should be billed with the width dimension parallel to the bend line. The length of the plate is measured

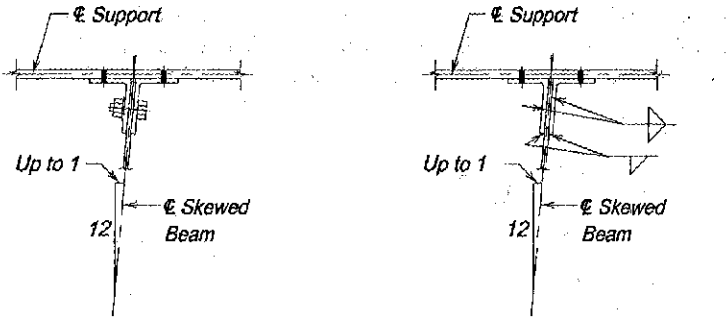

(a) All-bolted *(b) Bolted/welded*

Fig. 10-34. Skewed beam connections with bent double angles.

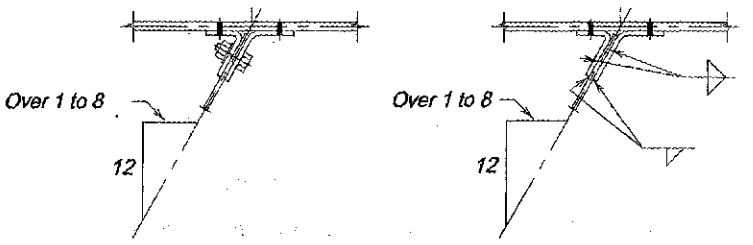

Fig. 10-35. Skewed beam connections with double bent plates.

on its mid-thickness, without regard to the radius of the bend. While this will provide a plate that is slightly longer than necessary, this will be corrected when the bend is laid out to the proper radius prior to fabrication.

Before bending, special attention should be given to the condition of plate edges transverse to the bend lines. Flame-cut edges of hardenable steels should be machined or softened by heat treatment. Nicks should be ground out and sharp corners should be rounded.

The strength of bent angles and bent plate connections may be calculated in the same manner as for square framed beams, making due allowances for eccentricity. The load is assumed to be applied at the point where the skewed beam center line intersects the face of the supporting member.

As the angle of skew increases, entering and tightening clearances on the acutely angled side of the connection will require a larger gage on the support. If the gage were to become objectionable, a single bent plate, illustrated in Figure 10-36, may provide a better solution. Note that the single-bent plate may be of the conventional type, or a more compact connection may be developed by "wrapping" the single bent plate, as illustrated in Figure 10-36(c).

In all-bolted construction, both the shop and field bolts should be designed for shear and the eccentric moment. A C-shaped weld is preferable to avoid turning the beam during shop fabrication. Single bent plates should be checked for flexural strength.

Skewed single-plate and skewed end-plate connections, shown in Figures 10-37 and 10-38, provide a simple, direct connection with a minimum of fittings and multiple punching requirements. When fillet-welded, these connections may be used for skews up to 30° (or a slope of $6^{5}/_{16}$-in-12) provided the root opening formed does not exceed $^{3}/_{16}$ in. For skew angles greater than 30°, see AWS D1.1/D1.1M, Section 2.3.5.2 (AWS, 2010).

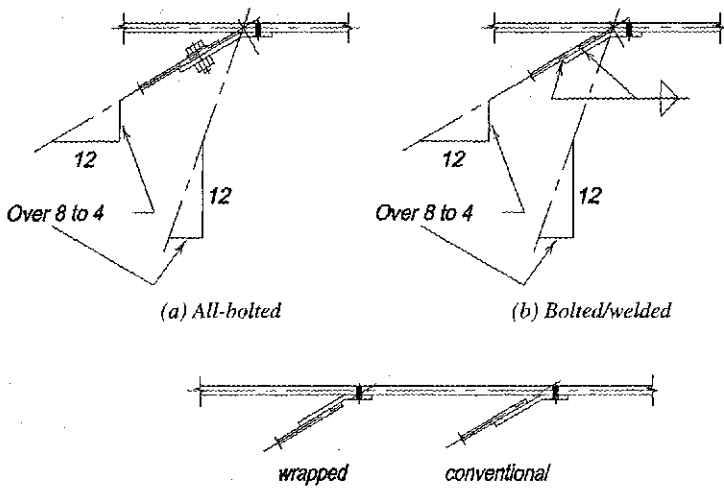

(a) All-bolted *(b) Bolted/welded*

(c) Configurations

Fig. 10-36. Skewed-beam connections with single-bent plates.

The maximum beam-web thickness which may be supported is a function of the maximum root opening and the angle of skew. If the thickness of the beam web were such that a larger root opening were encountered, the skewed single plate or the web connecting to the skewed end plate may be beveled, as shown in Figures 10-37(b) and 10-38(b). Since no root opening occurs with the bevel, there is no limitation on the thickness of the beam web. However, beveling, especially of the beam web, requires careful finishing and is an expensive procedure which may outweigh its advantages.

The design of skewed end-plate connections is similar to that discussed previously in "Shear End-Plate Connections" in this Part. However, when the gage of the bolts is not centered on the beam web, this eccentric loading should be considered. The design of skewed single-plate connections is similar to that discussed previously in "Single-Plate Connections" in this Part.

When skewed, stiffened seated connections are used, the stiffening element should be located so as to cross the skewed beam centerline well out on the seat. This can be accomplished by shifting the stiffener to the left or right of center to support beams which skew to the left or to the right, respectively. Alternatively, it may be possible to skew the stiffening element.

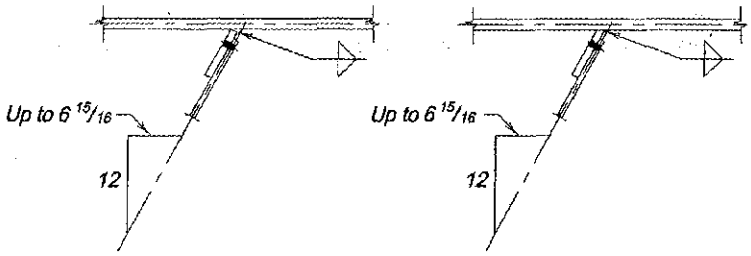

(a) Square edge (preferred) *(b) Beveled edge (alternative)*

Fig. 10-37. Skewed single-plate connections.

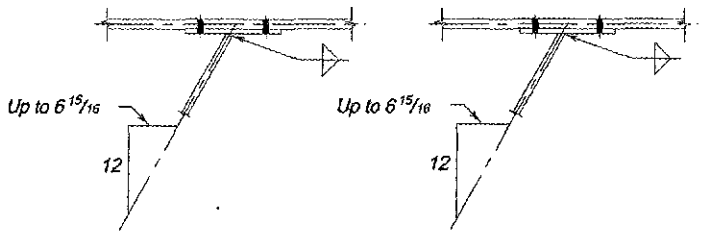

(a) Square edge (preferred) *(b) Beveled edge (alternative)*

Fig. 10-38. Skewed shear end-plate connections.

Sloped Connections

A beam is said to be sloped if the plane of its web is perpendicular to the plane of the face of the supporting member, but its flanges are not perpendicular to this face. The angle of slope B is shown in Figure 10-33(b) and represents the vertical angle to which the fittings must be set to the web of the sloped beam, or the amount that seat and top angles must be bent.

The design of sloped connections usually can be adapted directly from the rectangular connections covered earlier in this part, with consideration of the geometry of the connection to establish the location of fittings and fasteners. Note that sloped beams often require copes to clear supporting girders, as illustrated in Figure 10-39.

Figure 10-40 shows a sloped beam with double-angle connections, welded to the beam and bolted to the support. The design of this connection is essentially similar to that for rectangular double-angle connections. Alternatively, shear end-plate, tee, single-angle, single-plate, or seated connections could be used. Selection of a particular connection type may be influenced by fabrication economy, erectability, and/or by the types of connections used elsewhere in the structure.

Sloped seated beam connections may utilize either bent angles or plates, depending on the angle of slope. Dimensioning and entering and clearance requirements for sloped seated connections are generally similar to those for skewed connections. The bent seat and top plate shown in Figure 10-41 may be used for smaller bevels.

When the angle of slope is small, it is economical to place transverse holes in the beam web on lines perpendicular to the beam flange; this requires only one stroke of a multiple

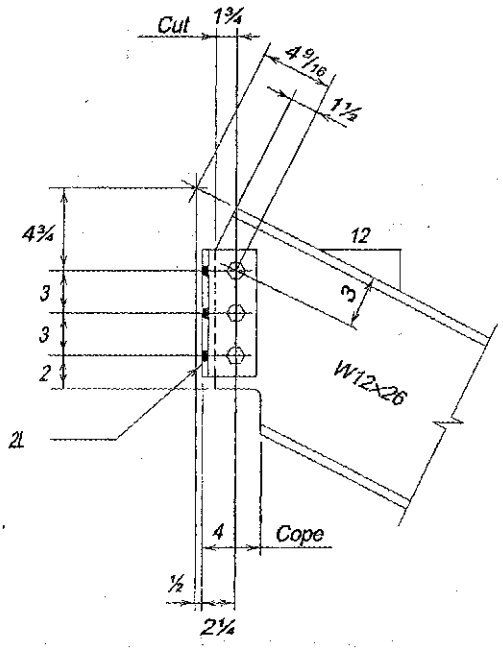

Fig. 10-39. Sloped all-bolted double-angle connection.

punch per line. Since non-standard hole arrangements, then, usually occur in the connecting materials (which are single-punched), this requires that sufficient dimensions be provided for the connecting material to contain fasteners with adequate edges and gages, and at the same time fit the angle to the web without encroaching on the flange fillets of the beam. For the end connection of the beam, this was accomplished by using a 6-in. angle leg; a 4-in. or even a 5-in. leg would not have furnished sufficient edge distance at the extreme fastener.

As the angle of slope increases, however, bolts for the end connections cannot conveniently be lined up to permit simultaneous punching of all holes in a transverse row. In this case, the fabricator may choose to disregard beam gage lines and arrange the hole-punching so that ordinary square-framed connection material can be used throughout, as shown in Figure 10-42.

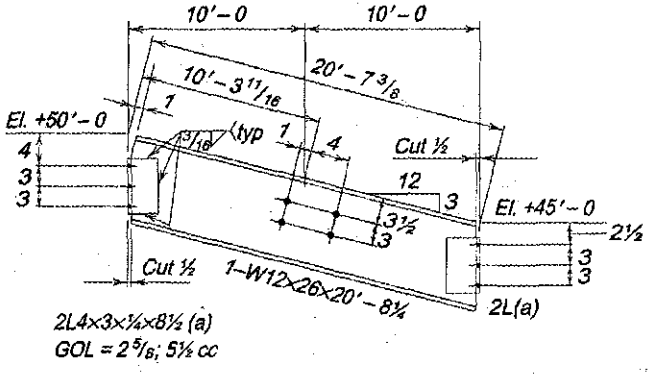

Fig. 10-40. Sloped bolted/welded double-angle connection.

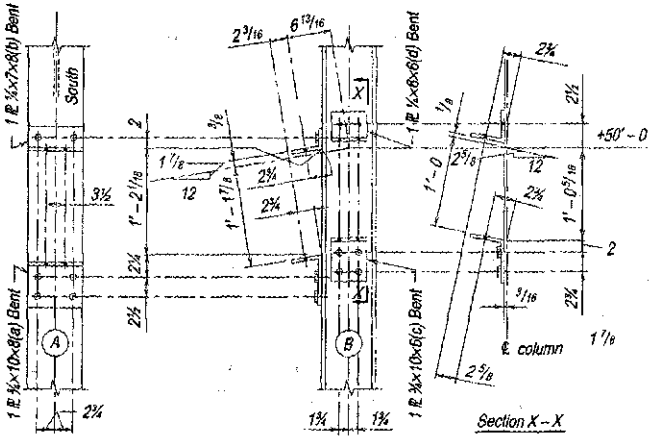

Fig. 10-41. Sloped seated connections.

Canted Connections

A beam perpendicular to the face of a supporting member, but rotated so that its flanges are tilted with respect to those of the support, is said to be canted. The angle of cant C is shown in Figure 10-33(c).

The design of canted connections usually can be adapted directly from the rectangular connections covered earlier in this part. In Figure 10-43, a double-angle connection is used.

Alternatively, shear end-plate, seated, single-angle, single-plate, and tee connections may also be used.

For channel B2 in Figure 10-44, which is supported by a sloping member B1 (not shown), to match the hole pattern in supporting member B1, the holes in the connecting materials

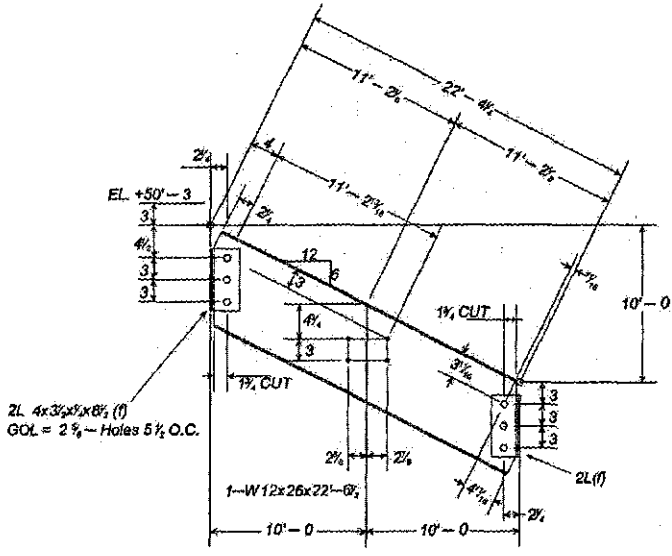

Fig. 10-42. Sloped beam with rectangular connections.

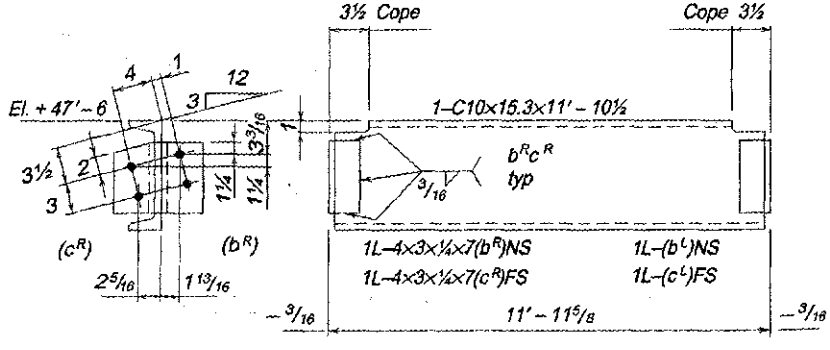

Fig. 10-43. Canted double-angle connections.

must be canted. As shown in Figure 10-44, the top flange of the channel and the connection angles, d^R and d^L, are cut to clear the flanges of beam B1. In this detail, with a 3-in-12 angle of cant, 4-in. legs were wide enough to contain the pattern of hole-punching.

Since the multiple punching or drilling of column flanges requires strict adherence to column gage lines, punching is generally skewed in the fittings. When, for some reason, this is not possible, as in Figure 10-45, skewed reference lines are shown on the column to aid in matching connections.

When canted connecting materials are assembled on the beam, particular care must be used in determining the direction of skew for punching the connection angles. An error reversing this skew may permit matching of holes in both members, but the beam will be canted opposite to the intended direction.

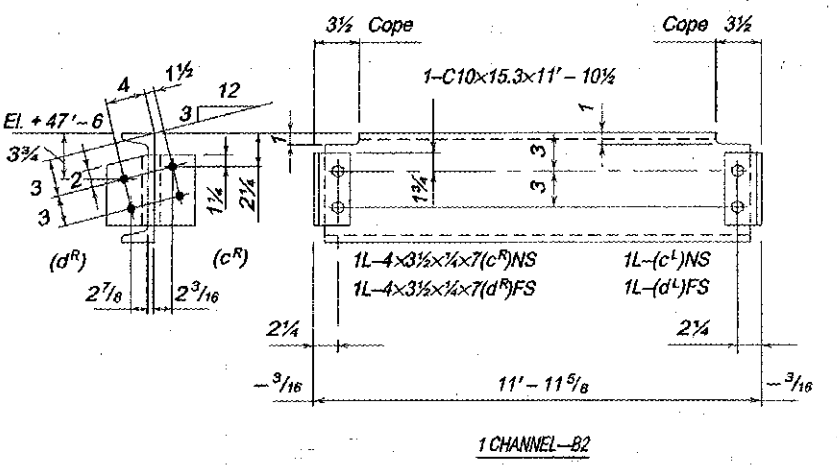

Fig. 10-44. Canted connections to a sloping support.

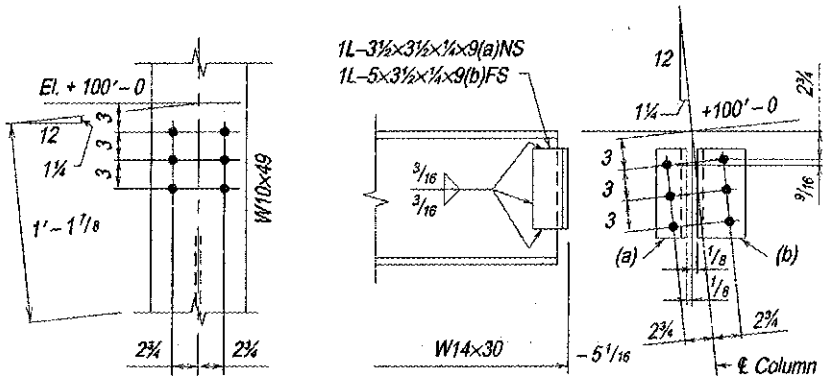

Fig. 10-45. Canted connection to column flange.

Note the connection angles in Figure 10-45 are shown shop-welded to the beam. This was done to provide tightening clearance for ¾-in. high-strength field bolts in the opposite leg. Had the shop fasteners been bolts, it would have been necessary to stagger the field and shop fasteners and provide longer angles for the increased spacing.

Canted seated beams, shown in Figure 10-46, present few problems other than those in ordinary square-end seated beams. Sufficient width and length of angle leg must be provided to contain the gage line punching or drilling in the column face, as well as the off-center location of the holes matching the punching in the beam flange. The elevation of the top flange centerline and the bevel of the beam flange may be given for reference on the beam detail, although the bevel shown will not affect the fabrication.

Inclines in Two or More Directions (Hip and Valley Framing)

When a beam inclines in two or more directions with respect to the axis of its supporting member, it can be classified as a combination of those inclination directions. For example, the beam of Figure 10-33(d) is both skewed and sloped. Angle A shows the skew and angle B shows the slope. Note that, since the inclined beam is foreshortened in the elevation, the

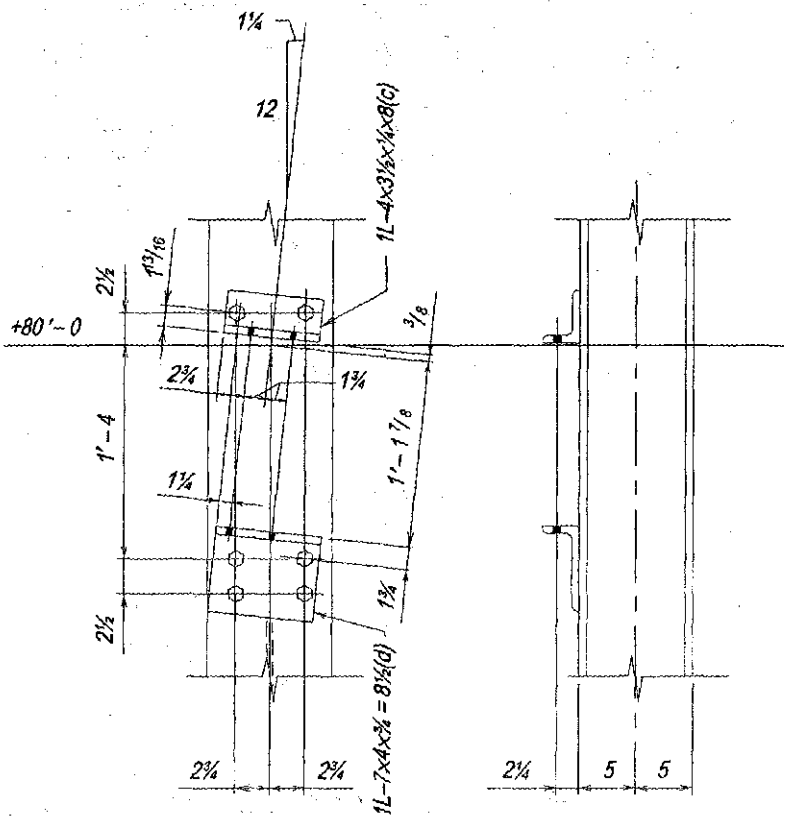

Fig. 10-46. Canted seated connections.

true angle B appears only in the auxiliary projection, Section X-X. The development of these details is quite complicated and graphical solutions to this compound angle work can be found in any textbook on descriptive geometry. Accurate dimensions may then be determined with basic trigonometry.

DESIGN CONSIDERATIONS FOR SIMPLE SHEAR CONNECTIONS TO HSS COLUMNS

Many of the familiar simple shear connections that are used to connect to wide-flange columns can be used with HSS columns. These include double and single angles, unstiffened and stiffened seats, single plates, and tee connections. One additional connection that is unique for HSS columns is the through-plate; note that this alternative is seldom required structurally and presents a significant economic penalty when a single plate connection would otherwise suffice. Variations in attachments are more limited with HSS columns since the connecting element will typically be shop-welded to the HSS and bolted to the supported beam. Except for seated connections, the bolting will be to the web of a wide-flange or other open profile section. Coping is not required except for bottom-flange copes that facilitate knifed erection with double-angle connections.

Double-Angle Connections to HSS

Table 10-1 is a design aid for double-angle connections. The table shows the compatible sizes of W-shapes for the various connection configurations. Based on maximum beam web thickness, maximum weld size, maximum HSS corner radius and 4-in. outstanding angle legs, double-angle connections may be used with any HSS having a width greater than or equal to 12 in. If 3-in. outstanding angle legs are used for connections with six bolts or less, HSS with widths of 10 in. are acceptable for obtaining welds on the flat of the side. For smaller web thicknesses, welds and corner radii, it may be possible to fit the connection on widths of 10 in. if the outstanding angle legs are 4 in. and on widths of 8 in. for outstanding angle legs of 3 in. However, these dimensions must be verified for a particular case. See the tabulated workable flat dimensions for HSS in Part 1.

Single-Plate Connections to HSS

As long as the HSS wall is not classified as a slender element, the local distortion caused by the single-plate connection will be insignificant in reducing the column strength of the HSS (Sherman, 1996). Therefore, single-plate connections may be used with HSS when $b/t \leq 1.40(E/F_y)^{0.5}$ or 35.1 for $F_y = 46$ ksi. Single-plate connections may also be used with round HSS as long as they are nonslender under axial load ($D/t \leq 0.11E/F_y$).

Unstiffened Seated Connections to HSS

In order to properly attach seat angles to the flat of the HSS, the workable flat must be large enough to accommodate both the width of the seat angle and the welds. Seat widths are usually 6 in. or 8 in., but other widths may also be used. See the tabulated workable flat dimensions for HSS in Part 1.

Table 10-6 may be used for unstiffened seated connections to HSS. The minimum HSS thicknesses are established based on the weld strength. If the HSS thickness is less than the minimum value, the weld strength must be reduced proportionally.

Stiffened Seated Connections to HSS

Tables 10-8 and 10-14 are design aids for stiffened seated connections. Table 10-8 is applicable to all member types, and Table 10-14 presents specific limits for HSS, based on the yield-line mechanism limit state for HSS. Some values for small connection lengths, L, and large HSS widths, B, have been reduced to meet the limit state for a line load with a width of $0.4L$ across the HSS, per AISC *Specification* Section K1.

The design procedure for stiffened seated connections to W-shape column webs (Sputo and Ellifritt, 1991) includes a yield line limit state based on an analysis by Abolitz and Warner (1965). This has been applied to the HSS wall which is also supported on two edges. However, since the HSS side supports are the same thickness rather than much heavier as in the case of W-shape flanges, the equation (Abolitz and Warner, 1965) for rotationally free edge supports has been used instead of fixed edge supports.

The strength of the connection is obtained by multiplying the tabulated value for a particular HSS width and stiffener length by the square of the HSS thickness and dividing by the width of the seat. For combinations of B and L that are not listed in Table 10-14, the HSS does not have sufficient flat width to accommodate a weld to the seat that is $0.2L$ on each side of the stiffener. Because the required width also depends on the stiffener thickness and the HSS corner radius, the HSS width must be checked even when the values are tabulated. See the tabulated workable flat dimensions for HSS in Part 1.

The minimum HSS thicknesses associated with the weld strengths of Table 10-8 are given in Table 10-14. If the HSS thickness is less than the minimum tabulated value, the weld strength must be reduced proportionally.

Through-Plate Connections

In the through-plate connection shown in Figure 10-47, the front and rear faces of the HSS are slotted so that the plate can be passed completely through the HSS and welded to both faces. Through-plate connections should be used when the HSS wall is classified as a slender element ($b/t > 1.40(E/F_y)^{0.5}$ or 35.1 for $F_y = 46$ ksi for rectangular HSS; $D/t > 0.11E/F_y$ for round HSS and Pipe) or does not satisfy the punching shear limit state. A single-plate connection is more economical and should be used if the HSS is neither slender nor inadequate for the punching shear rupture limit state.

Through-plate connections have the same limit states as single-plate connections and Table 10-10 may be used to determine the size and number of bolts and the plate thickness. The welds, however, are subject to direct shear and may not have to be as large as those for single-plate connections. For equilibrium of the forces in Figure 10-47, the shear in the welds on the front face should not exceed the strength of the pair of welds. The HSS wall strength can be matched to the weld shear strength to determine the minimum thickness, as illustrated in Part 9. If the thickness of the HSS is less than the minimum, the weld strength must be reduced proportionally. Conservatively, the welds on the rear face may be the same size.

When a connection is made on both sides of the HSS with an extended through-plate, the portion of the plate inside the HSS is subject to a uniform bending moment. For long connections, this portion of the plate may buckle in a lateral-torsional mode prior to yielding, unless H is very small. Using a thicker plate to prevent lateral-torsional buckling would restrict the rotational flexibility of the connection. Therefore, it must be recognized that the plate may buckle and that the moment will be shared with the HSS wall in a

complex manner. However, if the HSS would be satisfactory for a single-plate connection, the lateral-torsional buckling limit state is not a critical concern involving loss of strength.

Single-Angle Connections

For fillet welding on the flat of the HSS side, while keeping the center of the beam web in line with the center of the HSS, single-angle connections must be compatible with one-half the workable flat dimension provided in Part 1. Generally, the following HSS widths and thicknesses will work:

$b = 8$ in. and $t \leq 1/4$ in.
$b = 9$ in. and $t \leq 3/8$ in.
$b \geq 10$ in. and any nominal thickness

Alternatively, single angles can be welded to narrow HSS with a flare-bevel weld.

DESIGN TABLE DISCUSSION (TABLES 10-13, 10-14A, 10-14B, 10-14C AND 10-15)

Table 10-13. Minimum Inside Radius for Cold-Bending

Table 10-13 is a design aid providing generally accepted minimum inside-bending radius for a given plate thickness, t, for various grades of steel. Values are for bend lines transverse to the direction of final rolling (Brockenbrough, 1998). When bend lines are parallel

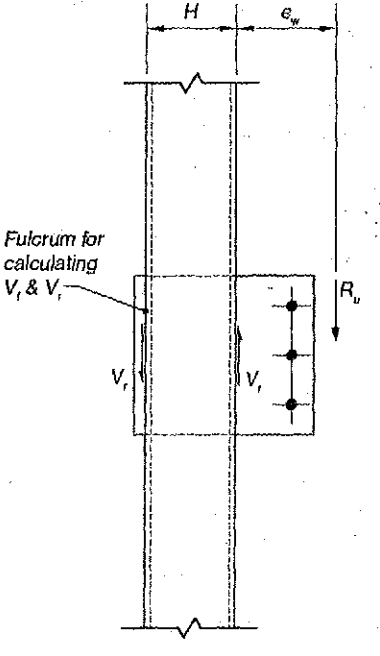

Fig. 10-47. Shear forces in a through-plate connection.

to the direction of final rolling, the tabular values should be increased by 50%. When bend lines are longer than 36 in., all radii may have to be increased if problems in bending are encountered.

Table 10-14A. Clearances for All-Bolted Skewed Connections

Table 10-14A is a design aid providing clearance dimensions for skewed bent double-angle connections and double and single-bent plate all-bolted connections, and specifies beam setbacks and gages. Since these dimensions are based on the maximum material thicknesses and fastener sizes indicated, it is suggested that in cases where many duplicate connections with less than maximum material or fasteners are required, savings can be realized if these dimensions are developed from specific bevels, beam sizes and fitting thicknesses.

Table 10-14B. Clearances for Bolted/Welded Skewed Connections

Table 10-14B is a design aid providing clearance dimensions, beam setbacks and gages for skewed bent double-angle connections and double and single-bent plate bolted/welded connections. Table 10-13B also specifies the dimension A which is added to the fillet weld size, S, to compensate for the root opening for skewed end-plate connections. This table is based conservatively on a gap of $^1/_8$ in. For beam webs beveled to the appropriate skew, values of H_1 for the entire table are valid and $A = 0$.

Table 10-14C. Welding Details for Skewed Single Plate Shear Connections

Table 10-14C is a design aid providing weld information for skewed single-plate shear connections. Additionally, this table provides clearances and dimensions for groove-welded single-plate connections without backing bars for skews greater than 30°; refer to AWS D1.1/D1.1M for prequalified welds for both types of joints.

Table 10-15. Required Length and Thickness for Stiffened Seated Connections to HSS

Table 10-15 is a design aid for stiffened seated connections to HSS. Specific limits are based on the yield-line mechanism limit state of the HSS wall. Some values for small connection lengths, L, and large HSS widths, B, have been reduced to meet the limit state for a line load with a width of $0.4L$ across the HSS, per AISC *Specification* Section K1.

The design procedure for stiffened seated connections to W-shape column webs (Sputo and Ellifritt, 1991) includes a yield limit state based on an analysis by Abolitz and Warner (1965). This has been applied to the HSS wall which is also supported on two edges. However, since the HSS side supports are the same thickness rather than much heavier, as in the case of W-shape column flanges compared to the column web, the equation for rotationally free edge supports has been used instead of fixed edge supports (Abolitz and Warner, 1965).

The strength of the connection is obtained by multiplying the tabulated value for a particular HSS width and stiffener length by the square of the HSS thickness and dividing by the width of the seat. For combinations of B and L that are not listed in Table 10-15, the HSS

does not have sufficient flat width to accommodate a weld to the seat that is $0.2L$ on each side of the stiffener. Since the required width also depends on the stiffener thickness and the HSS corner radius, the HSS width must be checked even when the values are tabulated. See the tabulated workable flat dimensions for HSS in Part 1.

Table 10-8 is applicable to all member types for stiffened seated connections. The minimum HSS thicknesses associated with the weld strengths of Table 10-8 are given in Table 10-15. If the HSS thickness is less than the minimum tabulated value, the weld strength must be reduced proportionally.

Table 10-13
Minimum Inside Radius for Cold-Bending[1]

Inside radius as a function of plate thickness

ASTM Designation[2]	Thickness, t, in.			
	Up to $^3/_4$	Over $^3/_4$ to 1	Over 1 to 2	Over 2
A36, A572-42	$1^1/_2\,t$	$1^1/_2\,t$	$1^1/_2\,t$	$2t$
A242, A529-50, A529-55, A572-50, A588, A992	$1^1/_2\,t$	$1^1/_2\,t$	$2\,t$	$2^1/_2\,t$
A572-55, A852	$1^1/_2\,t$	$1^1/_2\,t$	$2^1/_2\,t$	$3\,t$
A572-60, A572-65	$1^1/_2\,t$	$1^1/_2\,t$	$3\,t$	$3^1/_2\,t$
A514	$1^3/_4\,t$	$2^1/_4\,t$	$4^1/_2\,t$	$5^1/_2\,t$

[1] Values are for bend lines perpendicular to direction of final rolling. If bend lines are parallel to final rolling direction, multiply values by 1.5.
[2] The grade designation follows the dash; where no grade is shown, all grades and/or classes are included.

Table 10-14A
Clearances for All-Bolted Skewed Connections

Values given are for webs up to 3/4 in. thick, angles up to 5/8 in. thick, and bent plates up to 1/2 in. thick. Bolts are either 7/8-in. diameter or 1 in. diameter, as noted. Values will be conservative for material thinner than the maximums listed, or for work with smaller bolts, and may be reduced to suit conditions by calculation or layout. For thicker material or larger bolts, check entering, driving, and tightening clearances and increase *D* and bolt gages as necessary. All dimensions are in inches. Enter bolts as shown.

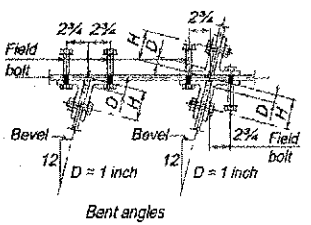

Bent angles

Values of *H* for Various Fastener Combinations

Field Bolts		7/8	1
Shop Bolts		7/8	1
Bevel	Up to 1	4*	4 1/4*
	Over 1 to 2	4 1/8	4 3/8
	Over 2 to 3	4 3/8	4 3/4

*For back-to-back connections, stagger shop and field bolts or increase the 2¾-in. field bolt dimension to 3¼.

Values of *H*, H_1, H_2 and *D* for Various Bolt Combinations

Field Fastener		7/8			1			
Shop Fastener		7/8			1			
Dimension		***H***	H_1	H_2	***H***	H_1	H_2	***D***
Bevel	Over 3 to 4	3 3/4	3 1/4	2 1/2	4 1/4	3 1/4	2 3/4	1 1/4
	Over 4 to 5	3 3/4	3 1/2	2 1/4	4 1/2	3 1/2	2 1/2	1 1/4
	Over 5 to 6	4	3 3/4	2 1/4	4 3/4	3 3/4	2 1/4	1 1/2
	Over 6 to 7	4 1/2	4	2 1/4	5	4	2 1/4	1 1/2
	Over 7 to 8	4 3/4	4 1/4	2 1/4	5 1/4	4 1/4	2 1/4	1 1/2

Double bent plates

Min. radius of cold bend for A 36 steel up to ½ in. thick. For other bends see Table 10-13

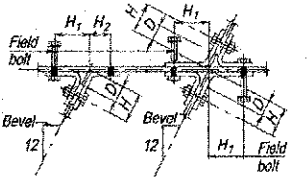

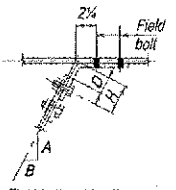

Field bolts—1 in. dia. max.
Shop bolts—1 in. dia. max.

Single bent plates

		Shop Bolts	
A	***B***	***D***	***H***
12	Over 8 to 9	1 1/2	3
12	Over 9 to 10	1 5/8	3 1/8
12	Over 10 to 11	1 3/4	3 1/4
12	Over 11 to 12	1 7/8	3 3/8
Under 12 to 11	12	2 1/8	3 5/8
Under 11 to 10	12	2 1/4	3 3/4
Under 10 to 9	12	2 1/2	4
Under 9 to 8	12	2 3/4	4 1/4
Under 8 to 7	12	3 1/4	4 3/4
Under 7 to 6	12	3 3/4	5 1/4
Under 6 to 5	12	4 1/2	6
Under 5 to 4	12	5 5/8	7 1/8

Table 10-14B
Clearances for Bolted/Welded Skewed Connections

Values given are for webs up to ¾ in. thick, angles up to ⅝ in. thick, and bent plates up to ½ in. thick, with bolts 1 in. diameter maximum. Values will be conservative for thinner material and for work with smaller bolts, and may be reduced to suit conditions by calculation or layout. For thicker material or larger bolts, check entering and tightening clearances and increase beam setback *D* and bolt gages as necessary. Enter bolts as shown. All dimensions are in inches.

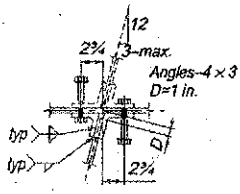

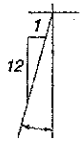

Recommended range of skews

Bent angles

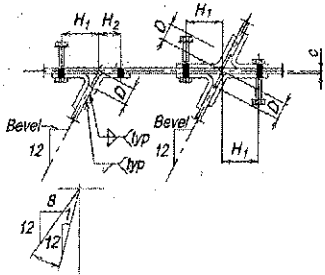

Recommended range of skews

Double bent plates

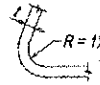

Min. radius of cold bend for A36 steel up to ½ in. thick. For other bends see Table 10-13

Bevel	*D*	H_1	H_2
Over 3 to 4	$c + \frac{5}{8}$	3¼	2¾
Over 4 to 5	$c + \frac{11}{16}$	3½	2½
Over 5 to 6	$c + \frac{3}{4}$	3¾	2¼
Over 6 to 7	$c + \frac{13}{16}$	4	2¼
Over 7 to 8	$c + \frac{7}{8}$	4¼	2¼

$$C = \frac{t_w}{2} + \frac{1}{16}''$$

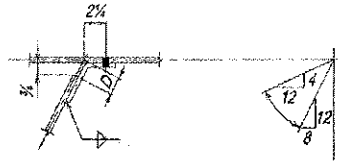

Determine value of *D* by calculation or layout

Recommended range of skews

Single bent plates

Table 10-14B (continued)
Clearances for Bolted/Welded Skewed Connections

Values given are for material and bolt sizes noted below. See "Shear End-Plate Connections" in Part 10 for proportioning these connections. *S* indicates weld size required for strength, or a size suitable to the thickness of material. When the beam web is cut square, only that portion of the table above the heavy lines is applicable. Dimension *A* is added to the weld size to compensate for the root opening caused by the skew. When the beam web is beveled to the required skew, values of H_1 for the entire table are valid, and A = 0. In either case, where weld strength is critical, increase the weld size to obtain the required throat dimension. Enter bolts as shown. All dimensions are in inches.

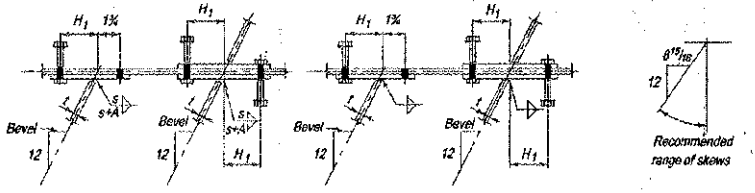

	$t = 1/4$		$t = 5/16$		$t = 3/8$		$t = 7/16$		$t = 1/2$		$t = 5/8$		$t = 3/4$	
Bevel	H_1	A	H_1	A	H_1	A	H_1	A	H_1	A	H_1	A	H_1	A
Up to 1 5/8	1 3/4	0	1 3/4	0	1 3/4	1/16	1 3/4	1/16	1 3/4	1/16	1 7/8	1/8	1 7/8	1/8
Over 1 5/8 to 2 1/8	1 3/4	0	1 3/4	1/16	1 7/8	1/16	1 7/8	1/16	1 7/8	1/8	2	1/8	2	1/8
Over 2 1/8 to 3 1/4	1 7/8	1/16	1 7/8	1/8	2	1/8	2	1/8	2	1/8	2 1/8	0	2 1/8	0
Over 3 1/4 to 4 3/8	2 1/8	1/8	2 1/8	1/8	2 1/8	1/8	2 1/8	0	2 1/4	0	2 1/4	0	2 3/8	0
Over 4 3/8 to 5 5/8	2 1/4	1/8	2 1/4	1/8	2 3/8	0	2 3/8	0	2 3/8	0	2 1/2	0	2 1/2	0
Over 5 5/8 to 6 15/16	2 1/2	1/8	2 1/2	0	2 1/2	0	2 1/2	0	2 5/8	0	2 5/8	0	2 3/4	0

Bolts: 7/8-in. diameter maximum
End Plate thickness: 3/8-in. maximum
Supporting web thickness: 3/4-in. maximum

Use of fillet welds is limited to connections with bevels of 6 15/16 in 12 and less.
For greater bevels consider use of double or single bent plates.

Table 10-14C
Weld Details for Skewed Single-Plate Connections

5/16- and 3/8-in. Plate Thickness*

For θ ≤ 17° from Perpendicular

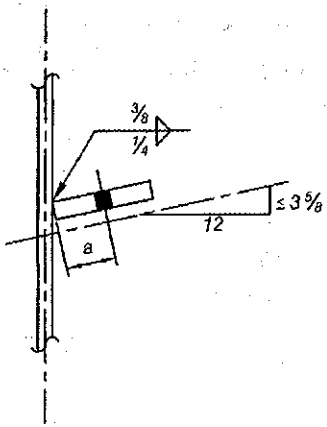

For 17° < θ ≤ 30° from Perpendicular

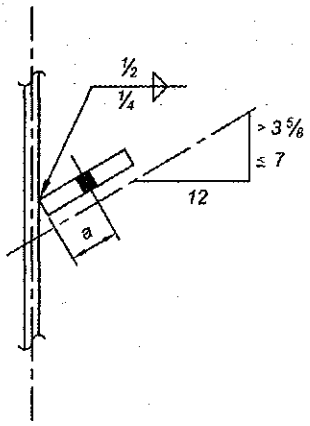

For 30° < θ < 45° from Perpendicular

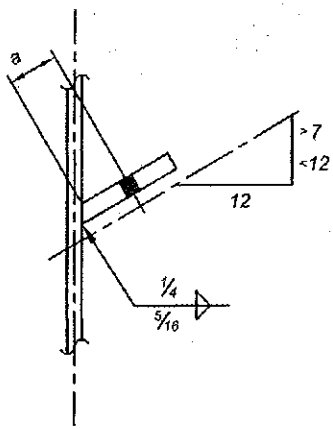

For θ = 45° from Perpendicular

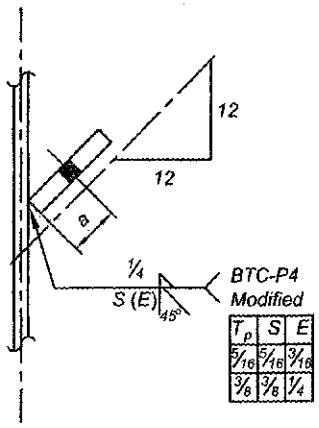

T_p	S	E
5/16	5/16	3/16
3/8	3/8	1/4

*Satisfies single-plate weld requirements for these thicknesses.

Table 10-14C (continued)
Weld Details for Skewed Single-Plate Connections

1/2-in. Plate Thickness*

For θ ≤ 17° from Perpendicular	For 17° < θ ≤ 22° from Perpendicular
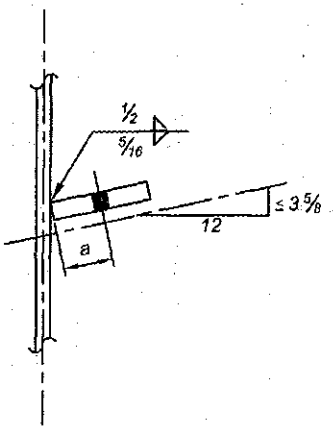	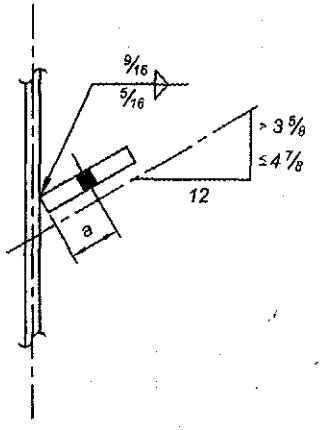
For 22° < θ ≤ 45° from Perpendicular	**For θ = 45° from Perpendicular**
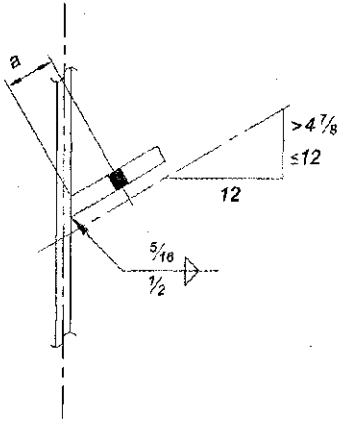	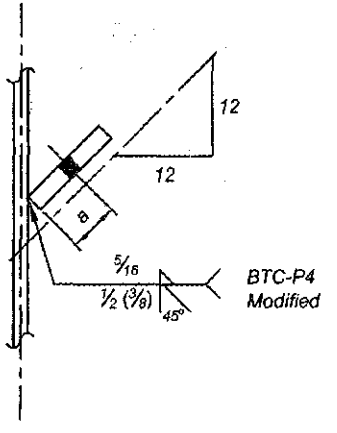

*Satisfies single-plate weld requirements for these thicknesses.

Table 10-15
Required Length and Thickness for Stiffened Seated Connections to HSS

	HSS Wall Strength Factor, $R_n W/t^2$ or $R_n W/t^2$, kips/in.											
L, in.	HSS Width, B, in.											
	5		5.5		6		7		8		9	
	ASD	LRFD	ASD	LRFD	ASD	LRFD	ASD	LRFD	ASD	LRFD	ASD	LRFD
6	558	839	545	819	536	805	526	791	525	789	528	793
7	687	1030	664	997	646	971	625	940	615	925	612	920
8			798	1200	771	1160	735	1100	714	1070	704	1060
9					911	1370	856	1290	823	1240	804	1210
10					1070	1600	990	1490	942	1420	912	1370
11							1140	1710	1070	1610	1030	1550
12							1300	1960	1210	1820	1160	1740
13									1370	2060	1290	1940
14									1540	2310	1440	2170
15									1720	2580	1600	2410
16											1700	2660
17											1960	2940

Required HSS Thickness	
Weld Size, in.	Min. HSS Thickness, in.
1/4	0.224
5/16	0.280
3/8	0.336
7/16	0.392
1/2	0.448
5/8	0.560

Table 10-15 (continued)
Required Length and Thickness for Stiffened Seated Connections to HSS

HSS Wall Strength Factor, $R_u W/t^2$ or $R_a W/t^2$, kips/in.

	HSS Width, B, in.											
	10		12		14		16		18		20	
L, in.	ASD	LRFD	ASD	LRFD	ASD	LRFD	ASD	LRFD	ASD	LRFD	ASD	LRFD
6	534	802	552	830	561	843	491	737	437	656	393	590
7	614	922	625	940	644	968	667	1000	594	892	535	803
8	700	1050	704	1060	717	1080	736	1110	759	1140	699	1050
9	793	1190	787	1180	794	1190	809	1220	828	1240	851	1280
10	893	1340	876	1320	876	1320	885	1330	901	1350	920	1380
11	1000	1500	971	1460	962	1450	965	1450	976	1470	993	1490
12	1120	1680	1070	1610	1050	1580	1050	1580	1060	1590	1070	1600
13	1240	1870	1180	1770	1150	1730	1140	1710	1140	1710	1150	1720
14	1370	2070	1290	1940	1250	1880	1230	1850	1220	1840	1230	1840
15	1520	2280	1410	2120	1360	2040	1330	1990	1310	1980	1310	1970
16	1670	2510	1540	2320	1470	2210	1430	2150	1410	2120	1400	2100
17	1830	2760	1680	2520	1590	2390	1540	2310	1510	2260	1490	2240
18	2010	3020	1820	2740	1710	2570	1650	2470	1610	2420	1590	2380
19	2190	3300	1970	2970	1840	2770	1760	2650	1710	2580	1680	2530
20	2390	3600	2130	3210	1980	2980	1880	2830	1820	2740	1790	2680
21			2300	3460	2120	3190	2010	3020	1940	2910	1890	2840
22			2480	3730	2280	3420	2140	3220	2060	3090	2000	3010
23			2670	4020	2440	3660	2280	3430	2180	3280	2120	3180
24			2870	4310	2600	3910	2430	3650	2310	3480	2230	3360
25			3080	4630	2780	4170	2580	3880	2450	3680	2360	3540
26					2960	4450	2740	4110	2590	3890	2480	3730
27					3150	4730	2900	4360	2730	4110	2610	3930
28					3350	5030	3070	4620	2880	4330	2750	4130
29					3560	5340	3250	4890	3040	4570	2890	4340
30					3770	5660	3440	5160	3200	4810	3040	4560
31							3630	5450	3370	5070	3190	4790
32							3830	5750	3540	5330	3340	5020

Required HSS Thickness

Weld Size, in.	Min. HSS Thickness, in.
1/4	0.224
5/16	0.280
3/8	0.336
7/16	0.392
1/2	0.448
5/8	0.560

Table 10-15 (continued)
Required Length and Thickness for Stiffened Seated Connections to HSS

HSS Wall Strength Factor, $R_n W/t^2$ or $R_n W/t^2$, kips/in.

	HSS Width, B, in.											
	22		24		26		28		30		32	
L, in.	ASD	LRFD	ASD	LRFD	ASD	LRFD	ASD	LRFD	ASD	LRFD	ASD	LRFD
6	357	536	328	492	302	454	281	421	262	393	246	369
7	486	730	446	669	412	618	382	574	357	535	334	502
8	635	953	582	874	537	807	499	749	466	699	437	656
9	804	1210	737	1110	680	1020	632	948	590	885	553	830
10	943	1420	910	1370	840	1260	780	1170	728	1090	682	1020
11	1010	1520	1030	1560	1020	1530	944	1420	881	1320	826	1240
12	1080	1630	1100	1660	1130	1690	1120	1690	1050	1570	983	1470
13	1160	1740	1180	1770	1200	1800	1220	1830	1230	1850	1150	1730
14	1240	1860	1250	1880	1270	1910	1290	1940	1310	1970	1330	2010
15	1320	1980	1330	2000	1340	2020	1360	2040	1380	2070	1400	2110
16	1400	2100	1410	2120	1420	2130	1430	2160	1450	2180	1470	2210
17	1490	2230	1490	2240	1500	2250	1510	2270	1530	2290	1540	2320
18	1580	2370	1570	2370	1580	2370	1590	2390	1600	2410	1620	2430
19	1670	2510	1660	2500	1660	2500	1670	2510	1680	2520	1690	2540
20	1760	2650	1750	2630	1750	2630	1750	2630	1760	2640	1770	2660
21	1860	2800	1850	2770	1840	2760	1840	2760	1840	2770	1850	2780
22	1960	2950	1940	2920	1930	2900	1920	2890	1920	2890	1930	2900
23	2070	3110	2040	3070	2020	3040	2010	3030	2010	3020	2010	3030
24	2180	3280	2140	3220	2120	3190	2110	3170	2100	3160	2100	3150
25	2290	3450	2250	3380	2220	3340	2200	3310	2190	3290	2190	3290
26	2410	3620	2360	3540	2320	3490	2300	3450	2280	3430	2280	3420
27	2530	3800	2470	3710	2430	3650	2400	3600	2380	3570	2370	3560
28	2650	3990	2590	3890	2540	3810	2500	3760	2480	3720	2460	3700
29	2780	4180	2700	4060	2650	3980	2610	3920	2580	3870	2560	3840
30	2920	4380	2830	4250	2760	4150	2710	4080	2680	4030	2650	3990
31	3050	4590	2950	4440	2880	4330	2820	4250	2780	4180	2760	4140
32	3190	4800	3080	4630	3000	4510	2940	4420	2890	4350	2860	4300

Required HSS Thickness

Weld Size, in.	Min. HSS Thickness, in.
1/4	0.224
5/16	0.280
3/8	0.336
7/16	0.392
1/2	0.448
5/8	0.560

PART 10 REFERENCES

Abolitz, A.L. and Warner, M.E. (1965), "Bending Under Seated Connections," *Engineering Journal*, AISC, January, pp. 1–5.

Astaneh, A., Call, S.M. and McMullin, K.M. (1989), "Design of Single-Plate Shear Connections," *Engineering Journal*, AISC, Vol. 26, No. 1, 1st Quarter, pp. 21–32, Chicago, IL.

AWS (2010), *Structural Welding Code—Steel*, AWS D1.1/D1.1M, American Welding Society, Miami, FL.

Brockenbrough, R.L. (1998), *Fabrication Guidelines for Cold Bending*, R.L. Brockenbrough and Associates, Pittsburgh, PA.

Carter, C.J., Thornton, W.A. and Murray, T.M. (1997), "Discussion—The Behavior and Load-Carrying Capacity of Unstiffened Seated Beam Connections," *Engineering Journal*, AISC, Vol. 34, No. 4, 4th Quarter, pp. 151–156.

Roeder, C.W. and Dailey, R.H. (1989), "The Results of Experiments on Seated Beam Connections," *Engineering Journal*, AISC, Vol. 26, No. 3, 3rd Quarter, pp. 90–95.

Ellifritt, D.S. and Sputo, T. (1999), "Design Criteria for Stiffened Seated Connections to Column Webs," *Engineering Journal*, AISC, Vol. 36, No. 4, 4th Quarter, pp. 160–167.

Kulak, G.L. (2002), *High Strength Bolts—A Primer For Structural Engineers*, Design Guide 17, AISC, Chicago, IL.

Kulak, G.L. and Green, D.L. (1990), "Design of Connectors in Web-Flange Beam or Girder Splices," *Engineering Journal*, AISC, Vol. 27, No. 2, 2nd Quarter, pp. 41–48.

Muir, L.S. and Hewitt, C.M. (2009), "Design of Unstiffened Extended Single-Plate Shear Connections," *Engineering Journal*, AISC, Vol. 46, No. 2, 2nd Quarter, pp. 67–79.

Muir, L.S. and Thornton, W.A. (2011), "The Development of a New Design Procedure for Conventional Single-Plate Shear Connections," *Engineering Journal*, AISC, Vol. 48, No. 2, 2nd Quarter, pp. 141–152.

Salmon, C.G., Johnson, J.E. and Malhas, F.A. (2009), *Steel Structures: Design and Behavior*, 5th Ed., Prentice Hall, Upper Saddle River, NJ.

Sputo, T. and Ellifritt, D.S. (1991), "Proposed Design Criteria for Stiffened Seated Connections to Column Webs," *Proceedings of the 1991 National Steel Construction Conference*, AISC, pp. 8.1–8.26, Chicago, IL.

Sherman, D.R. (1996), "Designing With Structural Tubing," *Engineering Journal*, AISC, Vol. 33, No. 3, 3rd Quarter, pp. 101–109.

Sherman, D.R. and Ghorbanpoor, A. (2002), "Design of Extended Shear Tabs," *Final Report to the American Institute of Steel Construction*, AISC, Chicago, IL.

Sumner, E.A. (2003), "North Carolina State Research Report on Single Plate Shear Connections," *Report to the American Institute of Steel Construction*, AISC, Chicago, IL.

Thornton, W.A. and Fortney, P. (2011), "On the Need for Stiffeners for and the Effect of Lap Eccentricity on Extended Shear Tabs," *Engineering Journal*, AISC, Vol. 48, No. 2, 2nd Quarter.

PART 11

DESIGN OF PARTIALLY RESTRAINED MOMENT CONNECTIONS

SCOPE 11–2
LOAD DETERMINATION 11–2
Strength 11–2
Stability 11–3
FLANGE-ANGLE PR MOMENT CONNECTIONS 11–3
FLANGE-PLATED PR MOMENT CONNECTIONS 11–5
PART 11 REFERENCES 11–6

SCOPE

The specification requirements and other design considerations summarized in this Part apply to the design of partially restrained moment connections. For the design of simple shear connections, see Part 10. For the design of fully restrained moment connections, see Part 12.

LOAD DETERMINATION

The behavior of partially restrained (PR) moment connections is intermediate in degree between the flexibility of simple shear connections and the full rigidity of fully restrained (FR) moment connections. AISC *Specification* Section B3.6b(b), Partially Restrained (PR) Moment Connections, defines PR connections as ones that transfer moment but for which the rotation between connected members is not negligible. When used, the analytical model of the PR connection must include the force-deformation characteristics of the specific connection. For further information on the use of PR moment connections, see Geschwindner (1991), Nethercot and Chen (1988), Gerstle and Ackroyd (1989), Deierlein et al. (1990), Goverdhan (1983), and Kishi and Chen (1986).

As an alternative, flexible moment connections (FMC) may be used as a simplified approach to PR moment connection design (Geschwindner and Disque, 2005), particularly for preliminary design. Using FMC, any end restraint that the connection may provide to the girder is assumed zero for gravity load because of the uncertainty of that restraint after repeated loading. The beam and its web connections are thus designed as simple, considering only the gravity loads. For lateral loads, the connection is assumed to behave as an FR moment connection for analysis and the full lateral load is carried by the assigned lateral frames. The resulting flexible moment connections are then designed as "fully restrained" for the calculated required strength due to lateral loads only.

Strength

With PR moment connections, the full strength of the connection is accompanied by some definite amount of rotation between the connected members. The AISC *Specification* requires that the structural engineer have a reliable moment-rotation, M-θ, curve before a

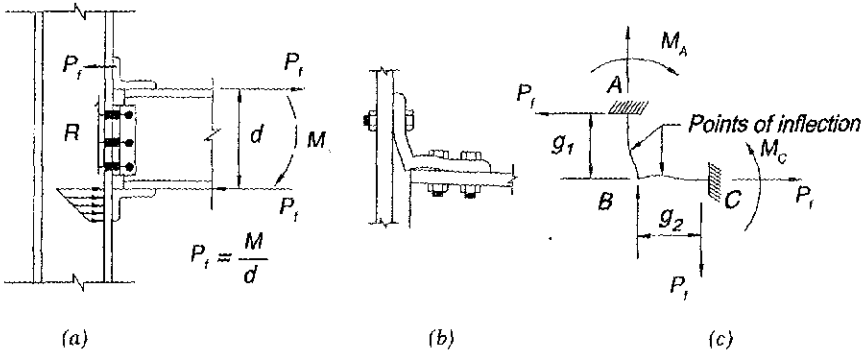

Fig. 11-1. Partially restrained moment connection behavior.

design can proceed. These M-θ curves are generally taken directly from the results of multiple connection tests as found in compilations such as those presented by Goverdhan (1983) and Kishi and Chen (1986) or from normalized curves developed from these tests. For information on PR composite connection see AISC Design Guide 8, *Partially Restrained Composite Connections* (Leon et al., 1996).

Although the M-θ curves are generally quite nonlinear in nature, as the connections undergo alternating cycles of loading and unloading, the connection "shakes down" so that its behavior may be modeled essentially as a linear relationship. This "Shakedown" process is fully described in Rex and Goverdhan (2002) and Geschwindner and Disque (2005). Both the nonlinear behavior and the shakedown behavior of the connection must be included in the determination of the connection strength and stiffness for design.

PR moment connections deliver concentrated forces to the flanges of columns that must be accounted for in the design of the column and column panel-zone per AISC *Specification* Section J10. Either the column size can be selected with adequate flange and web thicknesses to eliminate the need for column stiffening, or transverse stiffeners and/or web doubler plates can be provided. For further information, refer to AISC Design Guide 13, *Stiffening of Wide-Flange Columns at Moment Connections: Wind and Seismic Applications* (Carter, 1999).

Stability

Stability and second-order effects for frames that include PR moment connections are evaluated by the same methods as provided in the AISC *Specification* for frames with simple pin connections and FR moment connections. These are the direct analysis method of Chapter C and the effective length and the first-order analysis methods of Appendix 7. Although the analysis and design of frames with PR moment connections may be more complex than frames with simple or FR moment connections, there may be situations where using the exact behavior of the connection will be advantageous to the designer.

For additional information on designing PR moment frames for stability, see the work of Chen and Lui (1991) and Chen et al. (1996).

FLANGE-ANGLE PR MOMENT CONNECTIONS

Flange-angle PR moment connections are made with top and bottom angles and a simple shear connection.

The available strength of a flange-angle PR moment connection is determined from the applicable limit states for the bolts (see Part 7), welds (see Part 8), and connecting elements (see Part 9). In all cases, the available strength, ϕR_n or R_n/Ω, must equal or exceed the required strength, R_u or R_a.

The tensile force is carried to the angle by the flange bolts, with the angle assumed to deform as illustrated in Figure 11-1. A point of inflection is assumed between the bolt gage line and the face of the connection angle, for use in calculating the local bending moment and the corresponding required angle thickness. The effect of prying action must also be considered.

The strength of this type of connection is often limited by the available angle thickness and the maximum number of fasteners that can be placed on a single gage line of the vertical leg of the connection angle at the tension flange. Figure 11-2 illustrates the column

flange deformation and shows that only the fasteners closest to the column web are fully effective in transferring forces.

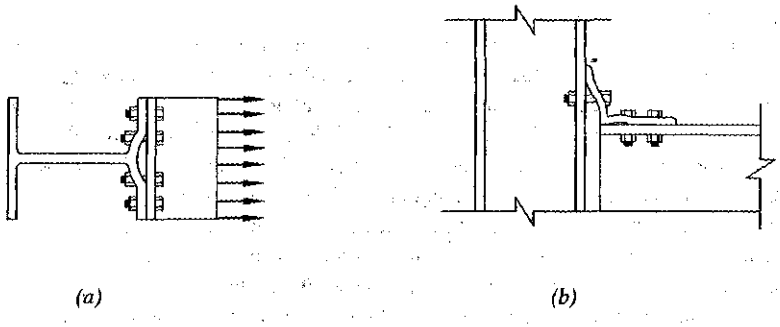

Fig. 11-2. Illustration of deformations in partially restrained moment connections.

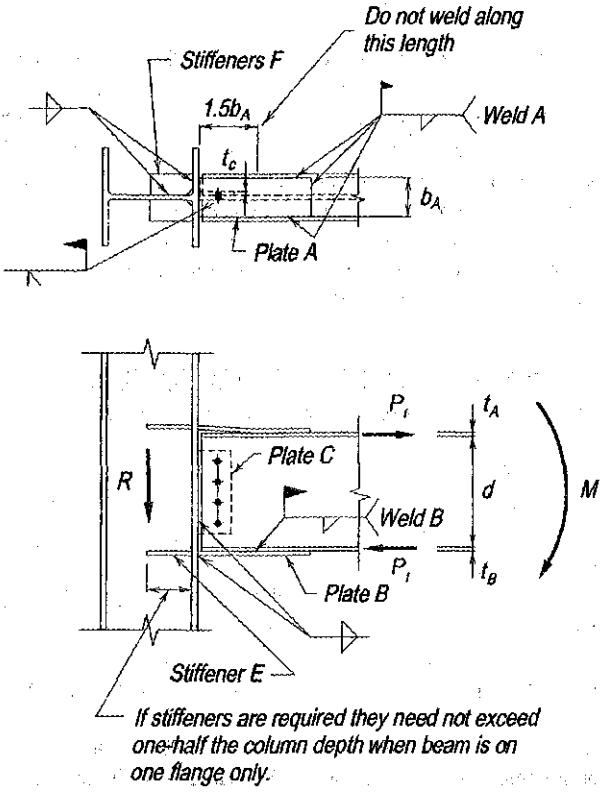

Fig. 11-3. Flange-plated partially restrained moment connections.

FLANGE-PLATED PR MOMENT CONNECTIONS

Originally proposed by Blodgett (1966), and illustrated in Figure 11-3, a flange-plated PR moment connection consists of a simple shear connection and top and bottom flange plates that connect the flanges of the supported beam to the supporting column. These flange plates are welded to the supporting column and may be bolted or welded to the flanges of the supported beam. An unwelded length of $1^1/_2$ times the flange-plate width, b_A, is normally assumed to permit the elongation of the plate necessary for PR moment connection behavior. Other flange-plated details are illustrated in Figures 11-4a and 11-4b.

The available strength of a flange plated PR moment connection is determined from the applicable limit states for the bolts (see Part 7), welds (see Part 8) and connecting elements (see Part 9). In all cases, the available strength ϕR_n or R_n/Ω, must equal or exceed the required strength, R_u or R_a.

The shop and field practices for flange-plated FR moment connections (see Part 12) are equally applicable to flange-plated PR moment connections.

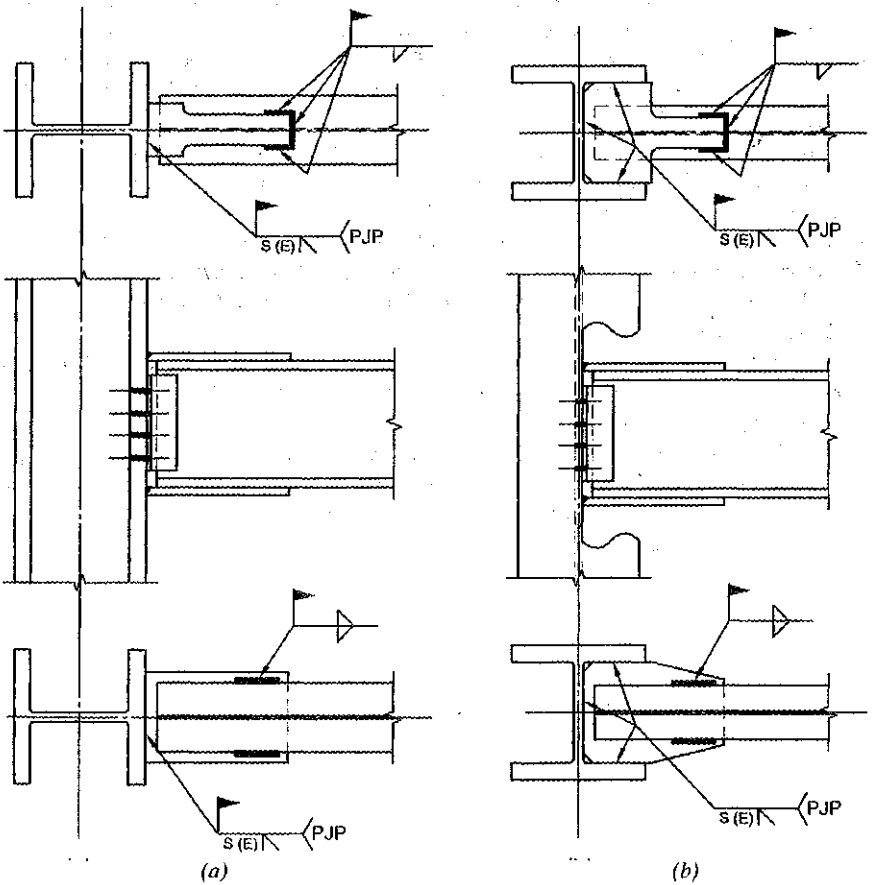

Fig. 11-4. Typical flange-plated partially restrained moment connections.

PART 11 REFERENCES

Blodgett, O.W. (1966), *Design of Welded Structures*, James F. Lincoln Arc Welding Foundation, Cleveland, OH.

Carter, C.J. (1999), *Stiffening of Wide-Flange Columns at Moment Connections: Wind and Seismic Applications*, Design Guide 13, AISC, Chicago, IL.

Chen, W.F., Goto, Y. and Liew, J.Y.R. (1996), "Stability Design of Semi-Rigid Frames," John Wiley and Sons Inc., New York, NY.

Chen, W.F. and Lui, E.M. (1991), "Stability Design of Steel Frames," CRC Press, Boca Raton, FL.

Deierlein, G.G, Hsieh, S.H. and Shen, Y.J. (1990), "Computer-Aided Design of Steel Structures with Flexible Connections," *Proceedings of the 1990 National Steel Construction Conference*, AISC, pp. 9.1–9.21, Chicago, IL.

Gerstle, K.H. and Ackroyd, M.H. (1989), "Behavior and Design of Flexibly Connected Building Frames," *Proceedings of the 1989 National Steel Construction Conference*, AISC, pp. 1.1–1.28, Chicago, IL.

Geschwindner, L.F. (1991), "A Simplified Look at Partially Restrained Connections," *Engineering Journal*, AISC, Vol. 28, No. 2, 2nd Quarter, pp. 73–78, Chicago, IL.

Geshwindner, L.F. and Disque, R.O. (2005), "Flexible Moment Connections for Unbraced Frames—A Return to Simplicity," *Engineering Journal*, AISC, Vol. 42, No. 2, 2nd Quarter, Chicago, IL.

Goverdhan, A.V. (1983), "A Collection of Experimental Moment Rotation Curves and Evaluation of Prediction Equations for Semi-Rigid Connections," Master of Science Thesis, Vanderbilt University, Nashville, TN.

Kishi, N. and Chen, W.F. (1986), "Database of Steel Beam-to-Column Connections," CE-STR-86-26, Purdue University, School of Engineering, West Lafayette, IN.

Leon, R.T., Hoffman, J.J. and Staeger, T. (1996), *Partially Restrained Composite Connections*, Design Guide 8, AISC, Chicago, IL.

Nethercot, D.A. and Chen, W.F. (1988), "Effects of Connections on Columns," *Journal of Constructional Steel Research*, Elsevier Applied Science Publishers, pp. 201–239, Essex, England.

Rex, C.O. and Goverdhan, A.V. (2002), "Design and Behavior of a Real PR Building," *Connections in Steel Structures IV: Behavior Strength and Design, Proceedings of the Fourth Workshop on Connections in Steel Structures*, AISC, October 22-24, 2000, pp. 94–105, Chicago, IL.

PART 12

DESIGN OF FULLY RESTRAINED MOMENT CONNECTIONS

SCOPE 12–2
FR MOMENT CONNECTIONS 12–2
Load Determination 12–2
Design Checks 12–3
Temporary Support During Erection 12–3
Welding Considerations for Fully Restrained Moment Connections 12–4
FR CONNECTIONS WITH WIDE-FLANGE COLUMNS 12–4
Flange-Plated FR Moment Connections 12–4
Directly Welded FR Moment Connections 12–7
Extended End-Plate FR Moment Connections 12–8
Shop and Field Practices 12–9
Design Assumptions 12–9
Design Procedures 12–10
FR MOMENT SPLICES 12–10
Location of Moment Splices 12–10
Force Transfer in Moment Splices 12–10
Flange-Plated FR Moment Splices 12–11
Directly Welded Flange FR Moment Splices 12–13
Extended End-Plate FR Moment Splices 12–13
SPECIAL CONSIDERATIONS 12–14
FR Moment Connections to Column Webs 12–14
Recommended Details 12–14
Ductility Considerations 12–14
FR Moment Connections Across Girder Supports 12–20
Top Flange Connection 12–20
Bottom Flange Connection 12–21
Web Connection 12–21
FR CONNECTIONS WITH HSS 12–21
HSS Through-Plate Flange-Plated FR Moment Connections 12–21
HSS Cut-out Plate Flange-Plated FR Moment Connections 12–22
Design Considerations for HSS Directly Welded FR Moment Connections 12–23
HSS Columns Above and Below Continuous Beams 12–24
HSS Welded Tee Flange Connections 12–25
HSS Diaphragm Plate Connections 12–26
Suggested Details for HSS to Wide-Flange Moment Connections 12–27
PART 12 REFERENCES 12–29

SCOPE

The specification requirements and other design considerations summarized in this Part apply to the design of fully restrained (FR) moment connections. For the design of simple shear connections, see Part 10. For the design of partially restrained moment connections, see Part 11.

FR MOMENT CONNECTIONS

Load Determination

As defined in AISC *Specification* Section B3.6b, FR moment connections possess sufficient rigidity to maintain the angles between connected members at the strength limit states, as illustrated in Figure 12-1. While connections considered to be fully restrained seldom actually provide for zero rotation between members, the small amount of rotation present is usually neglected and the connection is idealized as one exhibiting zero end rotation.

End connections in FR construction are designed to carry the required forces and moments, except that some inelastic but self-limiting deformation of a part of the connection

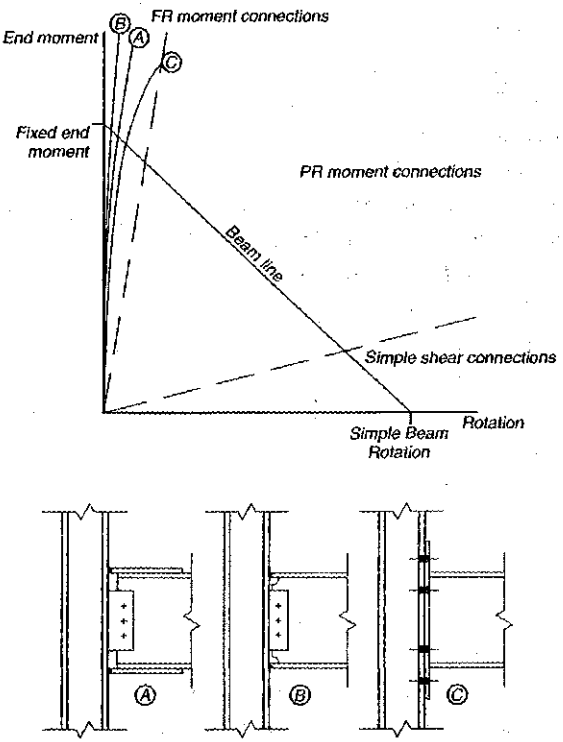

Fig. 12-1. FR moment connection behavior.

is permitted. Huang et al. (1973) showed that the moment can be resolved into an effective tension-compression couple acting as axial forces at the beam flanges. The flange force, P_{uf} or P_{af}, is determined as:

LRFD		ASD	
$P_{uf} = \frac{M_u}{d_m}$	(12-1a)	$P_{af} = \frac{M_a}{d_m}$	(12-1b)

where

M_u or M_a = required beam end moment, kip-in.

d_m = moment arm between the flange forces, in. (varies for all FR connections and for stiffener design)

Shear is transferred through the beam-web shear connection. Since, by definition, the angle between the beam and column in an FR moment connection remains unchanged under loading, eccentricity can be neglected entirely in the shear connection. Additionally, it is permissible to use bolts in bearing in either standard or slotted holes perpendicular to the line of force. Axial forces, if present, are normally assumed to be distributed uniformly across the beam flange cross-sectional area. However, if the beam-web connection has sufficient stiffness, it can also be assumed to participate in the transfer of beam axial force.

Moment connections deliver concentrated forces to the flanges of columns that must be accounted for in the design of the column and column panel-zone per AISC *Specification* Section J10. Either the column size can be selected with adequate flange and web thickness to eliminate the need for column stiffening, or transverse stiffeners and/or web doubler plates can be provided. For further information, refer to AISC Design Guide 13, *Stiffening of Wide-Flange Columns at Moment Connections: Wind and Seismic Applications* (Carter, 1999).

Design Checks

The available strength of an FR moment connection is determined from the applicable limit states for the bolts (see Part 7), welds (see Part 8), and connecting elements (see Part 9). The effect of eccentricity in the shear connection can be neglected. Additionally, the strength of the supporting column (and thus the need for stiffening) must be checked. In all cases, the available strength, ϕR_n or R_n/Ω, must equal or exceed the required strength, R_u or R_a.

Temporary Support During Erection

Bolted construction provides a ready means to erect and temporarily connect members by use of the bolt holes. In contrast, FR moment connections in welded construction must be given special attention so that all pieces affecting the alignment of the welded joint may be erected, fitted and supported until the necessary welds are made. Temporary support can be provided in welded construction by furnishing holes for erection bolts, temporary seats, special lugs or by other means.

The effects of temporary erection aids on the finished structure should be considered, particularly on members subjected to tension loading or fatigue. They should be permitted to remain in place whenever possible since they seldom are reusable and the cost to remove them can be significant. If left in place, erection aids should be located so as not to cause a stress concentration. If, however, erection aids are to be removed, care should be taken so that the base metal is not damaged.

Temporary supports should be sufficient to carry any loads imposed by the erection process, such as the dead weight of the member, additional construction equipment, or material storage. Additionally, they must be flexible enough to allow plumbing of the structure, particularly in tier buildings.

Welding Considerations for Fully Restrained Moment Connections

Field welding should be arranged for welding in the flat or horizontal position and preference should be given to fillet welds over groove welds, whenever possible. Additionally, the joint detail and welding procedure should be constructed to minimize distortion and the possibility of lamellar tearing.

The typical complete-joint-penetration groove weld in a directly welded flange connection for a rolled beam can be expected to shrink about $^1/_{16}$ in. in the length dimension of the beam when it cools and contracts. Thicker welds, such as for welded plate-girder flanges, will shrink even more—up to $^1/_8$ in. or $^3/_{16}$ in. This amount of shrinkage can cause erection problems in locating and plumbing the columns along lines of continuous beams. A method of calculating weld shrinkage can be found in Lincoln Electric Company (1973). Unnecessarily thick stiffeners with complete-joint-penetration groove welds should be avoided since the accompanying weld shrinkage may contribute to lamellar tearing and distortion.

Weld shrinkage can best be controlled by fabricating the beam longer than required by the amount of the anticipated weld shrinkage. Alternatively, the weld-joint root opening can be increased. For further information, refer to AWS D1.1.

FR CONNECTIONS WITH WIDE-FLANGE COLUMNS

Flange-Plated FR Moment Connections

As illustrated in Figure 12-2, a flange-plated FR moment connection consists of a shear connection and top and bottom flange plates that connect the flanges of the supported beam to the supporting column. These flange plates are welded to the supporting column and may be bolted or welded to the flanges of the supported beam.

In a column-flange connection, the flange plates are usually located with respect to the column web centerline. Because of the column-flange mill tolerance on out-of-squareness with the web, it is desirable to shop-fit long flange plates from the theoretical column-web centerline to assure good field fit-up with the beam. Misalignment on short connections, as illustrated in Figure 12-3, can be accommodated by providing oversized holes in the plates. Since mill tolerances in both the beam and the column may cause significant shop and/or field assembly problems, it may be desirable to ship the flange plates loose for field attachment to the column.

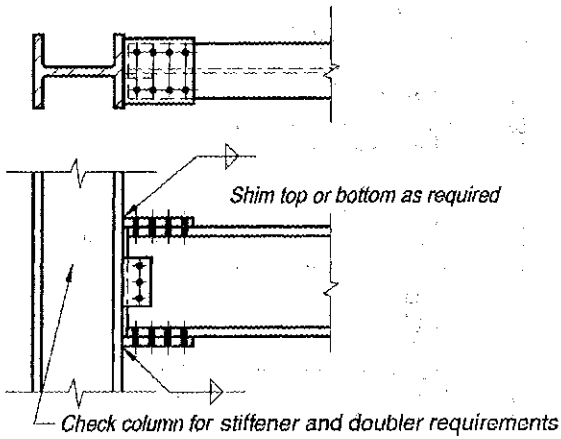

(a) Column flange support, bolted flange plates

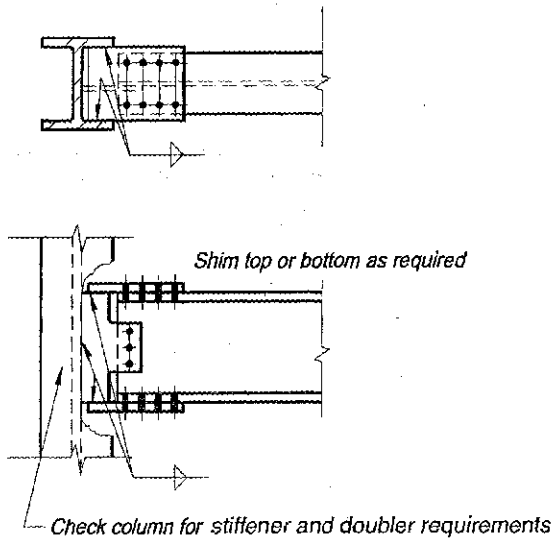

(b) Column web support, bolted flange plates

Fig. 12-2. Flange-plated FR moment connections.

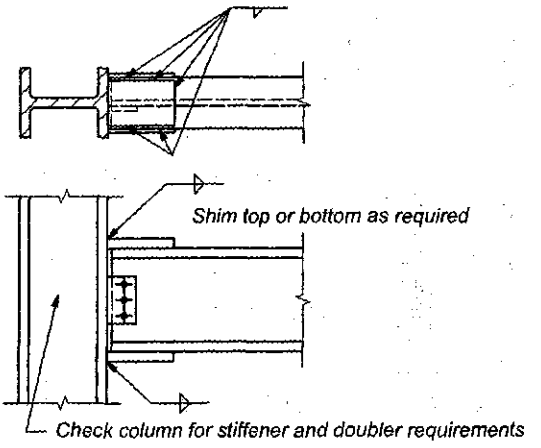

(c) Column flange support, welded flange plates

Fig. 12-2. (continued) Flange-plated FR moment connections.

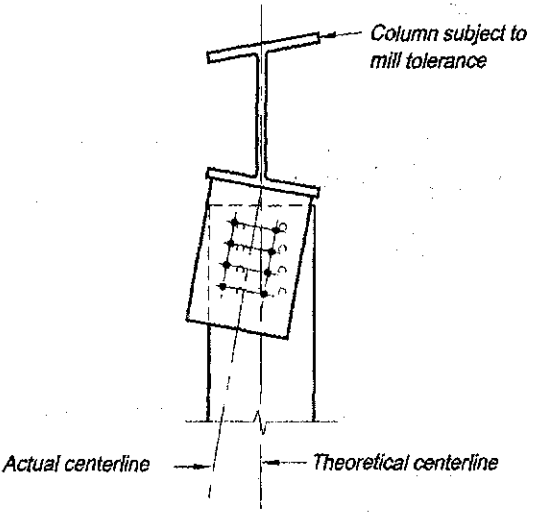

Fig. 12-3. Effect of mill tolerances on flange-plated connections.

Directly Welded Flange FR Moment Connections

As illustrated in Figure 12-4, a directly welded flange FR moment connection consists of a shear connection and complete-joint-penetration (CJP) groove welds, which directly connect the top and bottom flanges of the supported beam to the supporting column. Note, in Figure 12-4b, the stiffener extends beyond the toe of the column flange to eliminate the effects of triaxial stresses.

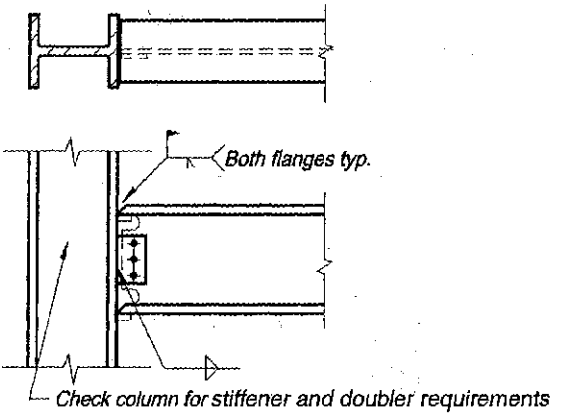

(a) Column flange support

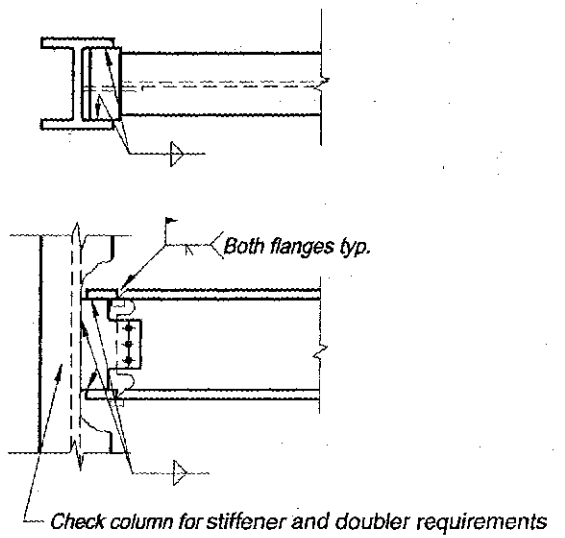

(b) Column web support

Fig. 12-4. Directly welded flange FR moment connections.

Extended End-Plate FR Moment Connections

As illustrated in Figure 12-5, an extended end-plate moment connection consists of a plate of length greater than the beam depth, perpendicular to the longitudinal axis of the supported beam. The end-plate is always welded to the web and flanges of the supported beam and bolted to the supporting member. The principal advantage of extended end-plate moment connections is that all welding is done in the shop. Thus, the erection process is relatively fast and economical.

Figure 12-6 illustrates three commonly used extended end-plate connections. The connections are classified by the number of bolts at the tension flange and by the presence of end-plate to beam flange stiffeners. The four-bolt unstiffened and stiffened extended end-plate connections of Figure 12-6a and 12-6b are generally limited by bolt strength. The

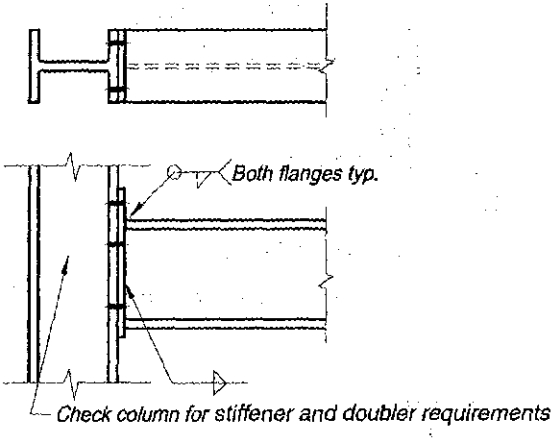

Fig. 12-5. Extended end-plate FR moment connection.

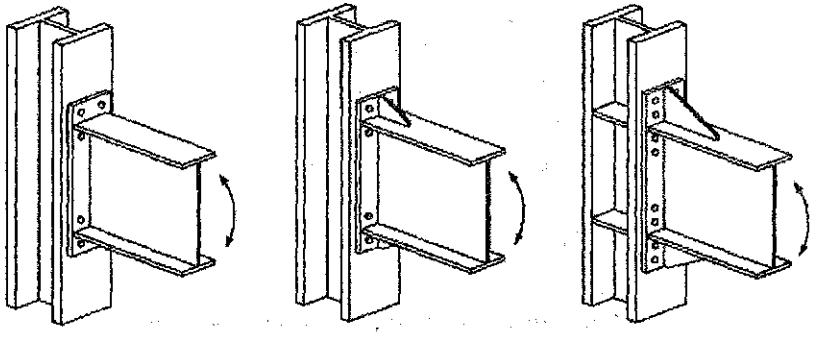

Fig. 12–6. Configurations of extended end-plate FR moment connections.

connection is compatible for use with nearly one-half of the available beam sections. Alternatively, the eight-bolt stiffened extended end-plate connection shown in Figure 12-6c is generally compatible with approximately 90% of the available beam sections.

Complete discussion of the design procedures, along with design examples, are found in AISC Design Guide 4, *Extended End-Plate Moment Connections—Seismic and Wind Applications* (Murray and Sumner, 2003). Design procedures and example calculations for nine other end-plate connections, which are commonly used in the metal building industry, are found in AISC Design Guide 16, *Flush and Extended Multiple-Row Moment End-Plate Connections* (Murray and Shoemaker, 2002). Recommended shop and field erection practices, basic design assumptions, and a brief overview of the design procedures follow.

Shop and Field Practices

End-plate moment connections require extra care in shop fabrication and field erection. The fit-up of extended end-plate connections is sensitive to the column flange conditions and may be affected by column flange-to-web squareness, beam camber, or squareness of the beam end. The beam is frequently fabricated short to accommodate the column overrun tolerances with shims furnished to fill any gaps which might result.

As reported by Meng and Murray (1997), use of weld access holes can result in beam flange cracking. If CJP welds are used, the weld cannot be inspected over the web; however, because this location is a relative "soft" spot in the connection, it is of no concern.

Design Assumptions

A summary of the assumptions made in the design guide procedures follows:

1. Group A or Group B high-strength bolts of diameter not greater than 1½ in. must be used.
2. The specified minimum yield stress of the end-plate material must be 50 ksi or less.
3. When the procedures in AISC Design Guide 16 are used, only static loading is permitted (wind, snow, temperature and seismic loads as defined in the Scope located at the front of this Manual are considered static loads).
4. The recommended minimum distance from the face of the beam flange to the nearest bolt centerline (the vertical bolt pitch) is the bolt diameter, d_b, plus ½ in. if the bolt diameter is not greater than 1 in., and plus ¾ in. for larger diameter bolts. However, many fabricators prefer to use a standard pitch dimension of 2 in. or 2½ in. for all bolt diameters.
5. All of the shear force at a connection is assumed to be resisted by the compression side bolts. End-plate connections need not be designed as slip-critical connections and it is noted that shear is rarely a major concern in the design of moment end-plate connections.
6. The end-plate width effective in resisting the applied moment must be taken as not greater than the beam flange width, b_f, plus 1 in.
7. The gage of the tension bolts (horizontal distance between vertical bolt lines) must not exceed the beam tension flange width.
8. When CJP welds are used, weld access holes should not be used, and the weld between beam flange-to-web fillets should be treated as a partial-joint-penetration (PJP) weld.

9. For nonseismic connections, when the required moment is less than the available flexural strength of the beam, the end-plate connection can be designed for the required moment but it is recommended that the connection be designed for not less than 60% of the available flexural strength of the beam.
10. Beam web-to-end-plate welds in the vicinity of the tension bolts should be designed to develop the yield stress of the beam web unless the required moment is less than 60% of the available flexural strength of the beam.
11. Only the web-to-end-plate weld between the mid-depth of the beam and the inside face of the beam compression flange or the weld between the inner row of tension bolts plus $2d_b$ and the inside face of the beam compression flange, whichever is smaller, is considered effective in resisting the beam end shear.

Design Procedures

The design procedure in AISC Design Guide 4 and AISC Design Guide 16 differ from those in previous AISC design methods. The new procedures are based on yield-line analysis for determining end-plate thickness and modified tee-hanger analysis to determine required bolt strength. The procedures in AISC Design Guide 4 are for pretensioned bolts and "thick plates," and result in connections with the smallest possible bolt diameter. For these connections, prying forces are zero. The procedures in AISC Design Guide 16 allow for both "thick plate" and "thin plate" designs. A thin plate design results in the smallest possible end-plate thickness and the maximum bolt prying force. In addition, connections can be designed using either pretensioned or snug-tight bolts.

Column side design procedures are included in AISC Design Guide 4. Both Design Guides have complete examples for the various end-plate configurations.

FR MOMENT SPLICES

Beams and girders sometimes are spliced in locations where both shear and moment must be transferred across the splice. Per AISC *Specification* Section J6, the nominal strength of the smaller section being spliced must be developed in groove-welded butt splices. Other types of beam or girder splices must develop the strength required by the actual forces at the point of the splice.

Location of Moment Splices

A careful analysis is particularly important in continuous structures where a splice may be located at or near the point of inflection. Since this inflection point can and does migrate under service loading, actual forces and moments may differ significantly from those assumed. Furthermore, since loading application and frequency can change in the lifetime of the structure, it is prudent for the designer to specify some minimum strength requirement at the splice. Hart and Milek (1965) propose that splices in fixed-ended beams be located at the one-sixth point of the span and be adequate to resist a moment equal to one-sixth of the flexural strength of the member, as a minimum.

Force Transfer in Moment Splices

Force transfer in moment splices can be assumed to occur in a manner similar to that developed for FR moment connections. That is, the required shear, R_u or R_a, is primarily transferred through the beam-web connection and the moment can be resolved into an

effective tension-compression couple where the required force at each flange, P_{uf} or P_{af}, is determined by:

LRFD	ASD
$P_{uf} = \frac{M_u}{d_m}$ (12-2a)	$P_{af} = \frac{M_a}{d_m}$ (12-2b)

where

M_u or M_a = required moment in the beam at the splice, kip-in.

d_m = moment arm, in. (varies based upon actual connection geometry)

Axial forces, if present, are normally assumed to be distributed uniformly across the beam flange cross-sectional area. However, if the beam-web connection has sufficient stiffness, it can also be assumed to participate in the transfer of beam axial force.

Flange-Plated FR Moment Splices

Moment splices can be designed as shown in Figure 12-7, to utilize flange plates and a web connection. The flange plates and web connection may be bolted or welded.

The splice and spliced beams should be checked in a manner similar to that described previously under "Flange-Plated FR Moment Connections," except that the web connection should be designed as illustrated previously for shear splices in Part 10 without consideration of eccentricity.

Figure 12-7 illustrates two types of splices, bolted and welded. Figure 12-7a illustrates the detail of a bolted flange-plated moment splice. For this case, the flange plates are normally made approximately the same width as the beam flange as shown in Figure 12-7a.

Alternatively, Figure 12-7b illustrates the detail of a welded splice. As shown in Figure 12-7b, the top plate is narrower and the bottom plate is wider than the beam flange,

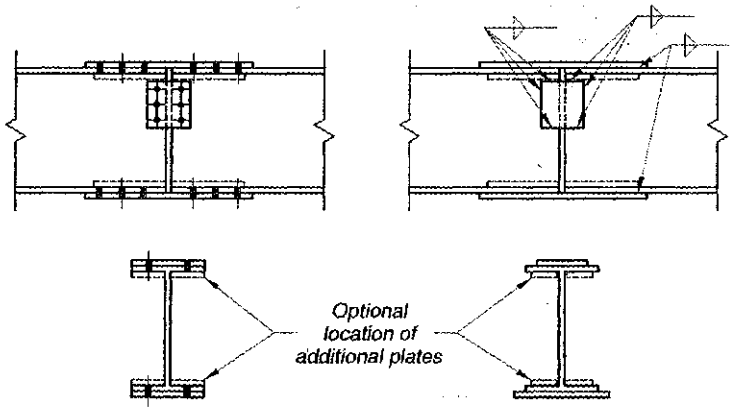

(a) Bolted *(b) Welded*

Fig. 12-7. Flange-plated moment splice.

permitting the deposition of weld metal in the downhand or horizontal position without inverting the beam. While this is a benefit in shop fabrication (the beam does not have to be turned over), it is of extreme importance in the field where the weld can be made in the horizontal instead of the overhead position, since the beam cannot be turned over. This detail also provides tolerance for field alignment, since the joint gap can be opened or closed. When splices are field-welded, some means for temporary support must be provided as discussed previously in "Temporary Support During Erection."

If the beam or girder flange is thick and the flange forces are large, it may be desirable to place additional plates on the insides of the flanges. In a bolted splice (Figure 12-7a), the bolts are then loaded in double shear and a more compact joint may result. Note that these additional plates must have sufficient area to develop their share of the double-shear bolt load.

In a welded splice (Figure 12-7b), these additional plates must have sufficient area to match the strength of the welds that connect them. Additionally, these plates must be set away from the beam web a distance sufficient to permit deposition of weld metal as shown in Figure 12-8a. This distance is a function of the beam depth and flange width, as well as the welding equipment to be used. A distance of 2 to 2½ in. or more may be required for this access. One alternative is to bevel the bottom edge of the plate to clear the beam fillet and place the plate tight to the beam web with a fillet weld as illustrated in Figure 12-8a. The effects of this bevel on the area of the plate must be considered in determining the required plate width and thickness. Another alternative would be to use unbeveled inclined plates as shown in Figure 12-8b.

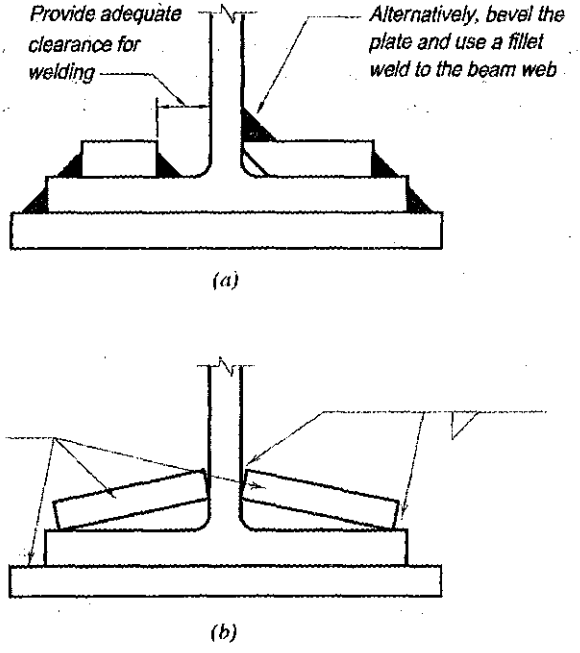

Fig. 12-8. Welding clearances for flange-plated moment splices.

Directly Welded Flange FR Moment Splices

Moment splices can be designed, as shown in Figure 12-9, to utilize a complete-joint-penetration groove weld connecting the flanges of the members being spliced. The web connection may then be bolted or welded. The splice and spliced beams should be checked in a manner similar to that described previously under "Directly Welded Flange FR Moment Connections," except that the web connection should be designed as illustrated previously for shear splices in Part 10.

Although rare in occurrence, some spliced members must be level on top. Where the depths of these spliced members differ, consideration should be given to the use of a flange plate of uniform thickness for the full length of the shallower member. This avoids the fabrication problems created by an inverted transition.

Frequently, the spliced shapes are different sizes, but of the same shape depth grouping. Because rolled shapes from the same shape depth grouping have the same dimension between the flanges, aligning the inside flange surfaces avoids a more difficult offset transition. Eccentricity resulting from differing flange thicknesses is usually ignored in the design. The web plates normally are aligned to their center lines.

The groove- (butt-) welded splice preparation shown in Figure 12-9 may be used for either shop or field welding. Alternatively, for shop welding where the beam may be turned over, the joint preparation of the bottom flange could be inverted.

Sloped transitions as shown in Figure 12-10 are only required for splices subject to seismic and dynamic loads. In splices subjected to dynamic or fatigue loading, the backing bar should be removed and the weld should be ground flush when it is normal to the applied stress (AISC, 1977). The access holes should be free of notches and should provide a smooth transition at the juncture of the web and flange.

Extended End-Plate FR Moment Splices

Moment splices can be designed as shown in Figure 12-11 where the tension force is in the bottom flange, to utilize four-bolt unstiffened extended end-plates connecting the members being spliced. If the end-plate and the bolts are designed properly, it is possible to load this type of connection to reach the full plastic moment capacity of the beam, $\phi_b M_p$ or M_p/Ω_b.

The splice and spliced beams should be checked in a manner similar to that described previously under "Extended End-Plate FR Moment Connections."

The comments for "Extended End-Plate Connections" are equally applicable to extended end-plate moment splices.

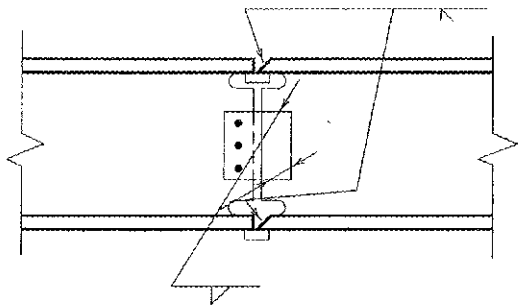

Fig. 12-9. Directly welded flange moment splice.

SPECIAL CONSIDERATIONS

FR Moment Connections to Column Webs

It is frequently required that FR moment connections be made to column webs. While the mechanics of analysis and design do not differ from FR moment connections to column flanges, the details of the connection design as well as the ductility considerations required are significantly different.

Recommended Details

When an FR moment connection is made to a column web, it is normal practice to stop the beam short and locate all bolts outside of the column flanges as illustrated in Figure 12-2b. This simplifies the erection of the beam and permits the use of an impact wrench to tighten all bolts. It is also preferable to locate welds outside the column flanges to provide adequate clearance.

Ductility Considerations

Driscoll and Beedle (1982) discuss the testing and failure of two FR moment connections to column webs: a directly welded flange connection and a bolted flange-plated connection, shown respectively in Figures 12-12a and 12-12b. Although the connections in these tests were proportioned to be "critical," they were expected to provide inelastic rotations at full plastic load. Failure occurred unexpectedly, however, on the first cycle of loading; brittle fracture occurred in the tension connection plate at the load corresponding to the plastic moment before significant inelastic rotation had occurred.

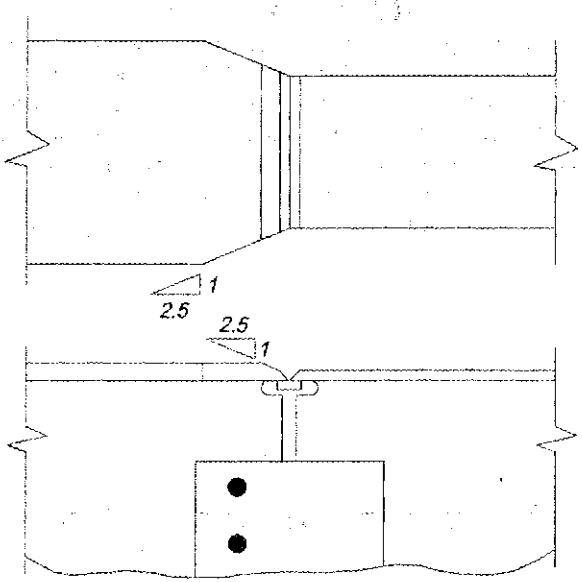

Fig. 12-10. Transitions at tension flange for directly welded flange moment splices, for seismic and dynamic loaded splices.

Examination and testing after the unexpected failure revealed that the welds were of proper size and quality and that the plate had normal strength and ductility. The following is quoted, with minor editorial changes relative to figure numbers, directly from Driscoll and Beedle (1982).

> Calculations indicate that the failures occurred due to high strain concentrations. These concentrations are: (1) at the junction of the connection plate and the column flange tip and (2) at the edge of the butt weld joining the beam flange and the connection plate.
>
> Figure 4 (Figure 12-13 here) illustrates the distribution of longitudinal stress across the width of the connection plate and the concentration of stress in the plate at the column flange tips. It also illustrates the uniform longitudinal stress

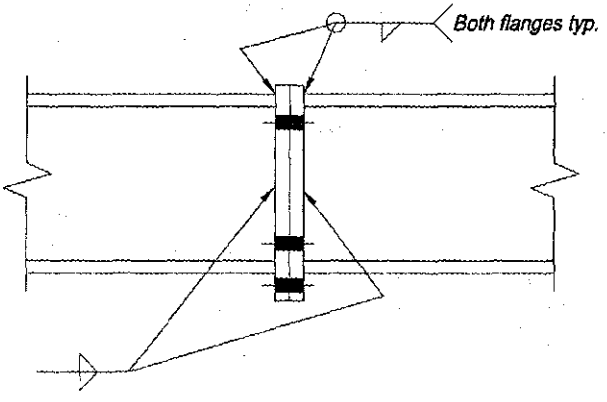

Fig. 12-11. Extended end-plate moment splice.

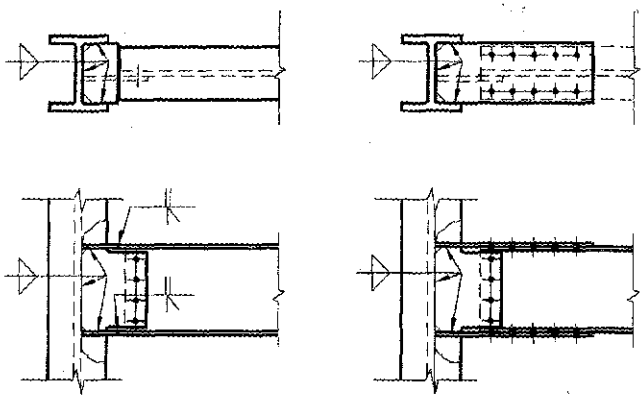

(a) Directly welded flange FR connection

(b) Bolted flange-plated FR connection

Fig. 12-12. Test specimens used by Driscoll and Beedle (1982).

distribution in the connection plate at some distance away from the connection. The stress distribution shown represents schematically the values measured during the load tests and those obtained from finite element analysis. (σ_o is a nominal stress in the elastic range.) The results of the analyses are valid up to the loading that causes the combined stress to equal the yield point. Furthermore, the analyses indicate that localized yielding could begin when the applied uniform stress is less than one-third of the yield point. Another contribution of the non-uniformity is the fact that there is no back-up stiffener. This means that the welds to the web near its center are not fully effective.

The longitudinal stresses in the moment connection plate introduce strains in the transverse and the through-thickness directions (the Poisson effect). Because of the attachment of the connection plate to the column flanges, restraint is introduced; this causes tensile stresses in the transverse and the through-thickness directions. Thus, referring to Figure 12-13, tri-axial tensile stresses are present along Section A-A and they are at their maximum values at the intersections of Sections A-A and C-C. In such a situation, and when the magnitudes of the stresses are sufficiently high, materials that are otherwise ductile may fail by premature brittle fracture.

The results of nine simulated weak-axis FR moment connection tests performed by Driscoll et al. (1983) are summarized in Figure 12-14. In these tests, the beam flange was simulated by a plate measuring either 1 in. × 10 in. or $1\frac{1}{8}$ in. × 9 in. The fracture strength exceeds the yield strength in every case, and sufficient ductility is provided in all cases except for that of Specimen D. Also, if the rolling direction in the first five specimens (A,

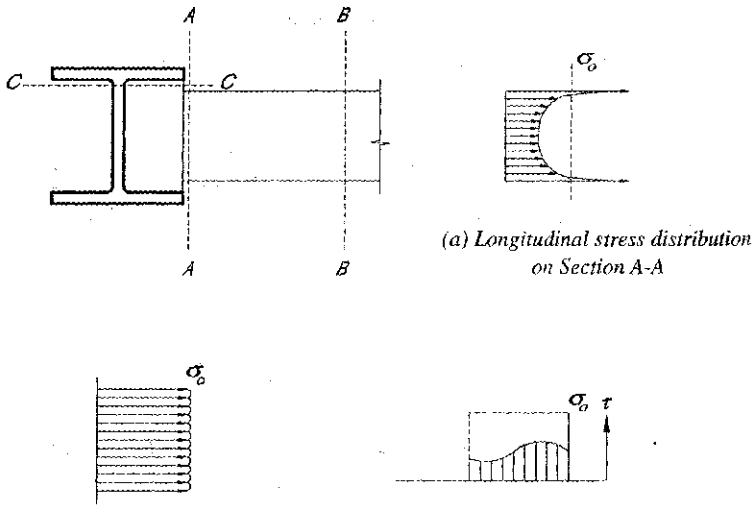

(a) Longitudinal stress distribution on Section A-A

(b) Longitudinal stress distribution on Section B-B

(c) Shear stress distribution on Section C-C

Fig. 12-13. Stress distributions in test specimens used by Driscoll and Beedle (1982).

B, C, D and E) were parallel to the loading direction, which would more closely approximate an actual beam flange, the ductility ratios for these would be higher. The connections with extended connection plates (i.e., projection of 3 in.), with extensions either rectangular or tapered, appeared equally suitable for the static loads of the tests.

Based on the tests, Driscoll et. al. (1983) report that those specimens with extended connection plates have better toughness and ductility and are preferred in design for seismic loads, even though the other connection types (except D) may be deemed adequate to meet the requirements of many design situations.

In accordance with the preceding discussion, the following suggestions are made regarding the design of this type of connection:

1. For directly welded (butt) flange-to-plate connections, the connection plate should be thicker than the beam flange. This greater area accounts for shear lag and also provides for misalignment tolerances.

   AWS D1.1, Section 5.22.3 restricts the misalignment of abutting parts such as this to 10% of the thickness, with 1/8-in. maximum for a part restrained against bending due to eccentricity of alignment. Considering the various tolerances in mill rolling (± 1/8 in. for W-shapes), fabrication and erection, it is prudent design to call for the connection plate thickness to be increased to accommodate these tolerances and avoid the subsequent problems encountered at erection. An increase of 1/8 in. to 1/4 in. generally is used.

   Frequently, this connection plate also serves as the stiffener for a strong axis FR or PR moment connection. The welds that attach the plate/stiffener to the column flange may then be subjected to combined tensile and shearing, or compression and shearing forces. Vector analysis is commonly used to determine weld size and stress.

   It is good practice to use fillet welds whenever possible. Welds should not be made in the column *k*-area.
2. The connection plate should extend at least 3/4 in. beyond the column flange to avoid intersecting welds and to provide for strain elongation of the plate. The extension should also provide adequate room for runout bars when required.
3. Tapering an extended connection plate is only necessary when the connection plate is not welded to the column web (Specimen E, Figure 12-14). Tapering is not necessary if the flange force is always compressive (e.g., at the bottom flange of a cantilevered beam).
4. To provide for increased ductility under seismic loading, a tapered connection plate should extend 3 in. Alternatively, a backup stiffener and an untapered connection plate with 3-in. extension could be used.

Normal and acceptable quality of workmanship for connections involving gravity and wind loading in building construction would tolerate the following:

1. Runoff bars and backing bars may be left for beams with flange thicknesses greater than 2 in. (subject to tensile stress only) where they are welded to columns or used as tension members in a truss.
2. Welds need not be ground, except as required for nondestructive testing.
3. Connection plates that are made thicker or wider for control of tolerances, tensile stress and shear lag need not be ground or cut to a transition thickness or width to match the beam flange to which they connect.

4. Connection plate edges may be sheared, or plasma- or gas-cut.
5. Intersections and transitions may be made without fillets or radii.
6. Flame-cut edges may have reasonable roughness and notches within AWS tolerances.

If a structure is subjected to loads other than gravity and wind loads, such as seismic, dynamic or fatigue loading, more stringent control of the quality of fabrication and erection with regard to stress risers, notches, transition geometry, welding and testing may be necessary; refer to the AISC *Seismic Provisions*.

Specimen No.	Sketch W14x257 (typical)	Fracture Load (kips)	Fracture Load / Yield Load	Ductility Ratio
A	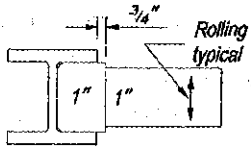	730	1.38	6.3
B	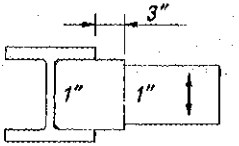	824	1.55	5.3
C	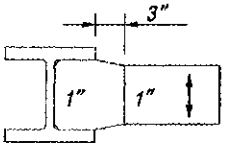	756	1.43	5.43
D	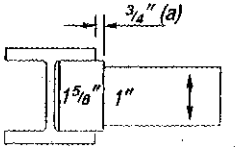	570	1.11	1.71

Fig. 12-14. Results of weak-axis FR moment connection ductility tests performed by Driscoll et al. (1983).

Specimen No.	Sketch W14x257 (typical)	Fracture Load (kips)	Fracture Load / Yield Load	Ductility Ratio
E	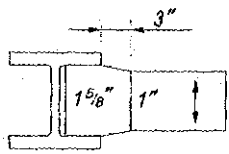	802	1.51	6.81
A2	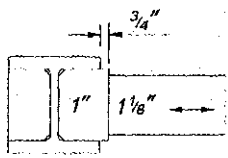	762	1.40	17.7
B2	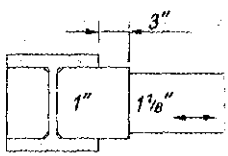	795	1.46	16.5
E2	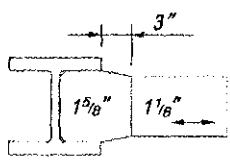	814	1.49	16.4 [b]
C2	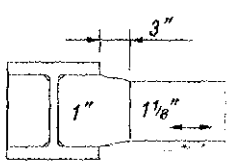	813	1.49	29.6

Notes: (a) 3/4″ dimension is estimated—no dimension given.

(b) Ductility ratio estimated. Actual value not known due to malfunction in deflection gauge.

Fig. 12-14. (continued)

FR Moment Connections Across Girder Supports

Frequently, beam-to-girder-web connections must be made continuous across a girder-web support, as with continuous beams and with cantilevered beams at wall, roof-canopy or building lines. While the same principles of force transfer discussed previously for FR moment connections may be applied, the designer must carefully investigate the relative stiffness of the assembled members being subjected to moment or torsion and provide the fabricator and erector with reliable camber ordinates.

Additionally, the design should still provide some means for final field adjustment to accommodate the accumulated tolerances of mill production, fabrication and erection; it is very desirable that the details of field connections provide for some adjustment during erection. Figure 12-15 illustrates several details that have been used in this type of connection and the designer may select the desirable components of one or more of the sketches to suit a particular application. Therefore, these components are discussed here as a top flange, bottom flange and web connection.

Top Flange Connection

As shown in Figure 12-15a, the top flange connection may be directly welded to the top flange of the supporting girder. Figures 12-15b and 12-15c illustrate an independent splice plate that ties the two beams together by use of a longitudinal fillet weld or bolts. This tie plate does not require attachment to the girder flange, although it is sometimes so connected to control noise if the connection is subjected to vibration.

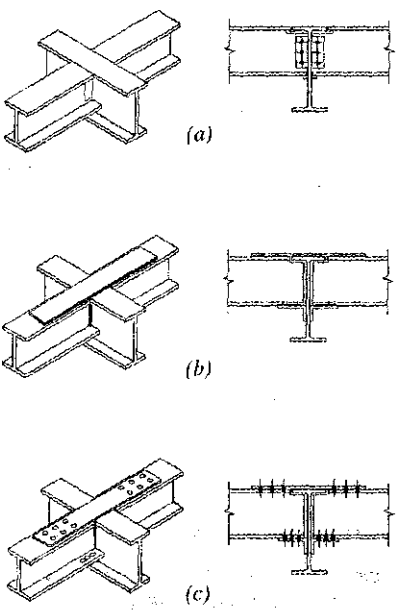

Fig. 12-15. FR moment connections across girder-web supports.

Bottom Flange Connection

When the bottom flanges deliver a compressive force only, the flange forces are frequently developed by directly welding these flanges to the girder web as illustrated in Figure 12-15a. Figure 12-15b illustrates the use of an angle or channel below the beam flange to provide for a horizontal fillet weld. The angle or channel should be wider than the beam flange to allow for downhand welding. Figure 12-15c is similar, but uses bolts instead of welds to develop the flange force.

Web Connection

While a single-plate connection is shown in Figure 12-15a and unstiffened seated connections are shown in Figures 12-15b and 12-15c, any of the shear connections in Part 10 may be used. Note that the effect of eccentricity in the shear connection may be neglected.

FR CONNECTIONS WITH HSS

HSS Through-Plate Flange-Plated FR Moment Connections

If the required moment transfer to the column is larger than can be provided by the bolted base plate or cap plate, or if the HSS width is larger than that of the wide flange beam, a through-plate moment connection can be used as illustrated in Figure 12-16. It should be noted that through-plate connections are more difficult to erect than the continuous beam connected framing.

When moment connections are made using through-plates such as is shown in Figure 12-16, the fabricator must allow adequate clearance between the through-plates and the structural section W-shape so as to allow for the combined effects of mill, fabrication and erection tolerances. The permissible mill tolerances for W-shape variations in depth and squareness are shown in Table 1-22. Shimming in the field during erection with conventional shims or finger shims is the most commonly used method to fill the gap between the W-shape and the through-plate.

Specific design considerations for through-plate moment connections are as follows:

1. In Figures 12-16a and 12-16b, the column moment transfer into the joint is limited by the fillet weld of the HSS to the through-plates. If necessary, a partial-joint-penetration (PJP) groove weld can be used to improve the connection strength or a complete-joint-penetration (CJP) groove weld with backing bars can be used.
2. In Figure 12-16 an end plate (base plate) is employed to create a splice in the column. Bolt tension with prying on the base plate will determine its thickness and thus limit the moment that can be transferred to the upper HSS.
3. The cap plate, which is also a flange splice plate, should be at least the same thickness as the base plate so that moment transfer between the HSS columns need not rely on load transfer through the beam flanges. The cap plate may need to be thicker than the HSS base plate due to the combined effect of plate bending from the bolted base plate and plate tension or compression from the wide flange moment transfer.
4. The welding of the HSS to the cap and through-plate must be examined for both the HSS normal forces and the shear produced from the moment transfer from the W-shape.

HSS Cut-out Plate Flange-Plated FR Moment Connections

An alternative to interrupting the HSS for the cover or through-plate is to use a wider plate with a cut-out to slip around the HSS as illustrated in Figure 12-17. A shear plate can be placed on the front and rear of the HSS faces to provide simple connections for perpendicular beams. The cut-out plate can easily be extended on the near and far sides so that a moment splice is created about both horizontal axes through the joint. The perpendicular framing should ideally be of the same depth for this detail to work well or, in the case of the simple connections, the perpendicular beams could be shallower than the space between the horizontal plates. The cut-out plates are shown as shop-welded; however, they could be field-welded.

For cut-out plate connections, the erection of the beams is more difficult than for continuous beam connections. The beams must be slipped between the two plates and

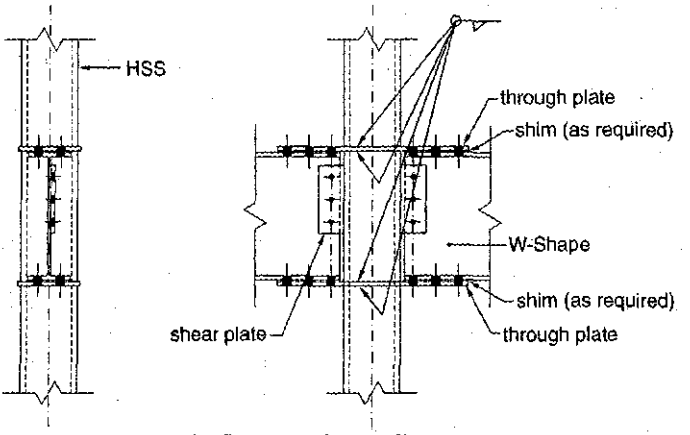

(a) Between column splices

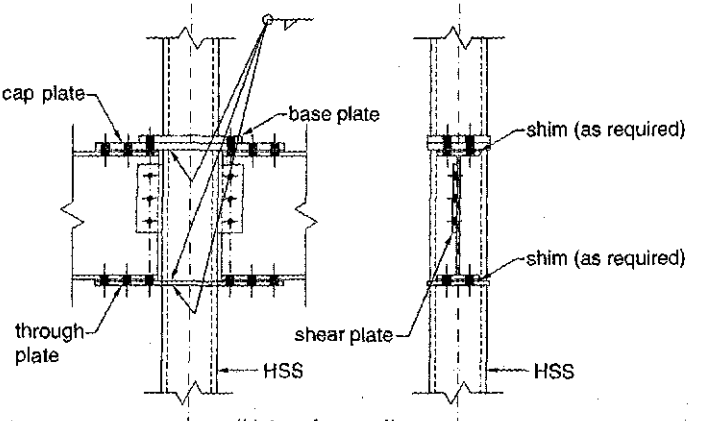

(b) At column splice

Fig. 12-16. Through-plate moment connection.

against the single plate connection with shimming being required, unless the upper plate is field-welded in place.

Design Considerations for HSS Directly Welded FR Moment Connections

It may be possible to accomplish the moment transfer to the HSS without having to use a WT splice plate, end-plates, or diaphragm plates. Significant moment transfer can be achieved by attaching the W-shape directly to the face of the HSS either by welding or by bolting. These connections are capable of developing the available flexural strength of the HSS. The available flexural strength of the W-shape, however, is seldom achieved because of the flexibility of the HSS wall.

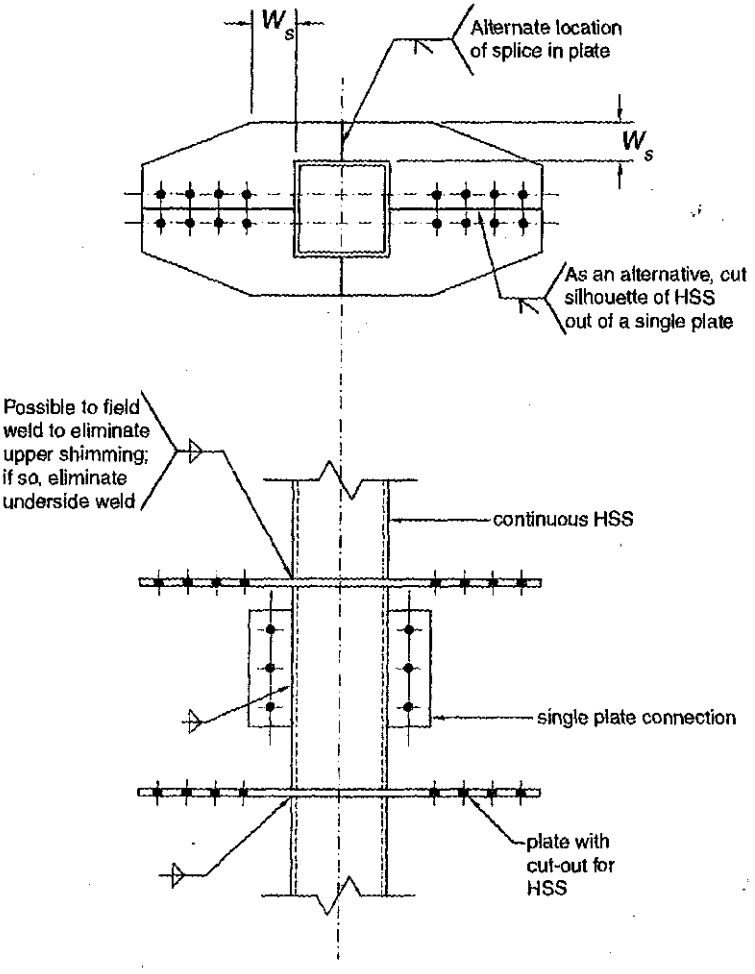

Fig. 12-17. Exterior plate moment connection.

The flexural strength for the welded W-shape is based on the strength of the respective flanges in tension and compression acting against the face of the HSS. This flange force can be considered to be the same as that of a plate with the dimensions of the flange.

Several limit states exist for the plate length (flange width) oriented perpendicular to the length of the HSS (Packer and Henderson, 1997; Packer et al., 2010).

HSS Columns Above and Below Continuous Beams

Field connection to the flanges of the beam and of continuous beams can be used at joints where there is an HSS above and below a continuous beam. This situation is illustrated in Figures 12-18 and 12-19. If the column load is not high, stiffener plates may be used to transfer the axial load across the beam as shown in Figure 12-18a. If the axial load is higher, it may be necessary to use a split HSS instead of plate stiffeners, as shown in Figure 12-18b. The width of the W-shape must be at least as wide as the HSS and should preferably be

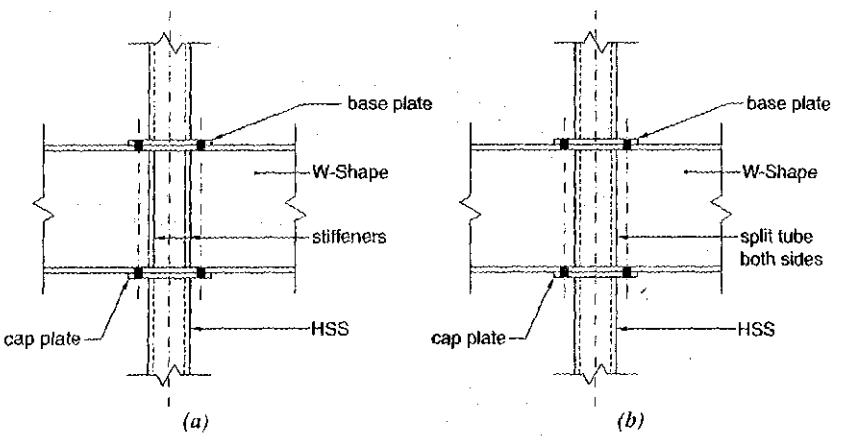

Fig. 12-18. HSS columns spliced to continuous beams.

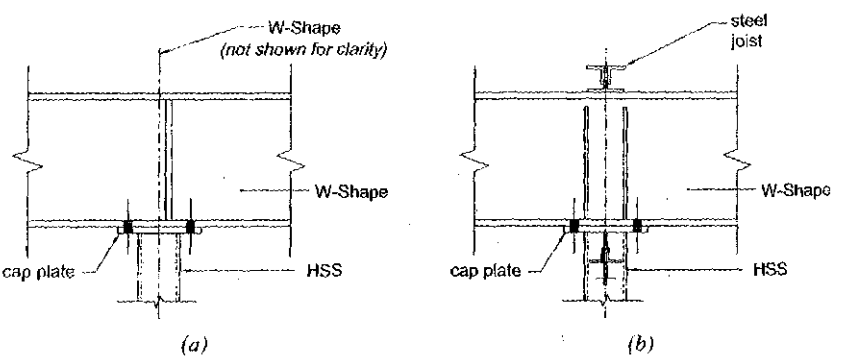

Fig. 12-19. Roof beam continuous over HSS column.

wider than the HSS for this detail to be used as shown. It may be necessary to use a rectangular HSS column in order to fit the HSS base plate on the beam flange. The moment transfer to the HSS is limited by the strength of the four bolts, the W-shape flange thickness, and the base and cap plate thicknesses.

HSS Welded Tee Flange Connections

If the primary moment transfer is from a wide flange to an HSS, rather than through the HSS to another wide flange, a number of other connection concepts will work well. One of these is to use structural tee sections to transfer the force from the flanges of the wide flange to the walls of the HSS as is illustrated in Figure 12-20. The tees should be long enough so that a flare bevel-groove (or single J-groove) weld with weld reinforcement can be used to connect the tee to the HSS. An alternative to using the tees to transfer the

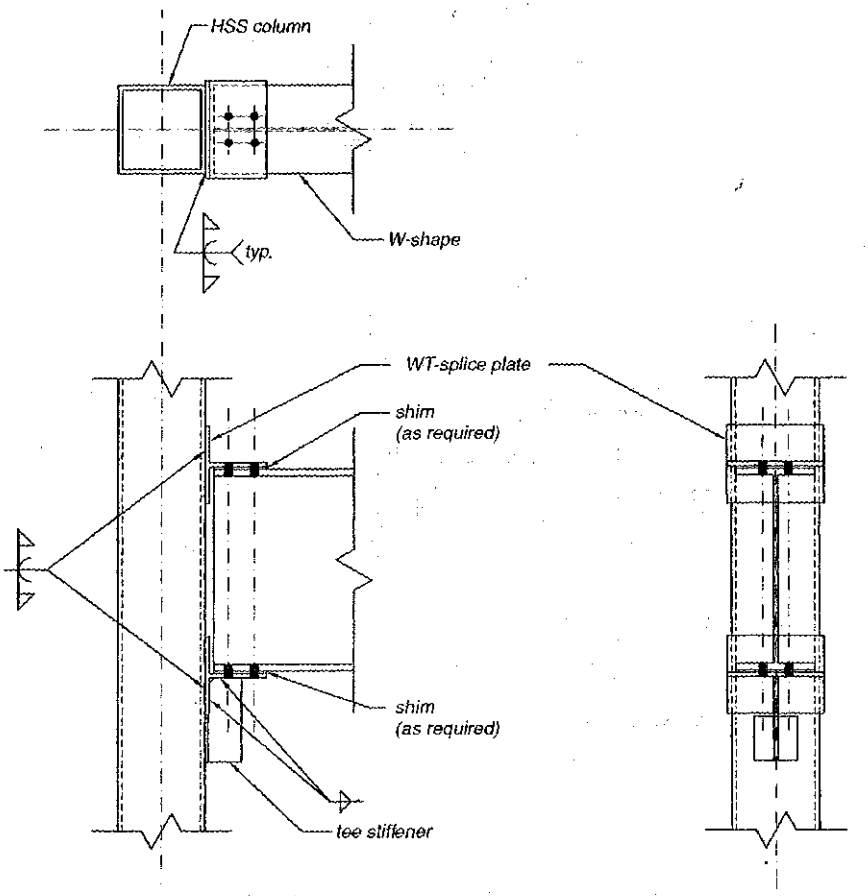

Note: A shear plate could be used in lieu of the vertical tee stiffener

Fig. 12-20. Tee splice plates to HSS column.

beam shear would be to use a single plate connection, if a deep enough plate can be fitted between the flanges of the tees.

HSS Diaphragm Plate Connections

If the moment delivered by the W-shape to the HSS cannot be transmitted by other means, then use of diaphragm plates that transfer the flange loads to the sides of the HSS is appropriate. This is illustrated in Figure 12-21. For this moment connection the limit states are those indicated for the cut-out plate connection plus a check of the weld transferring shear from the flange plate to the HSS wall.

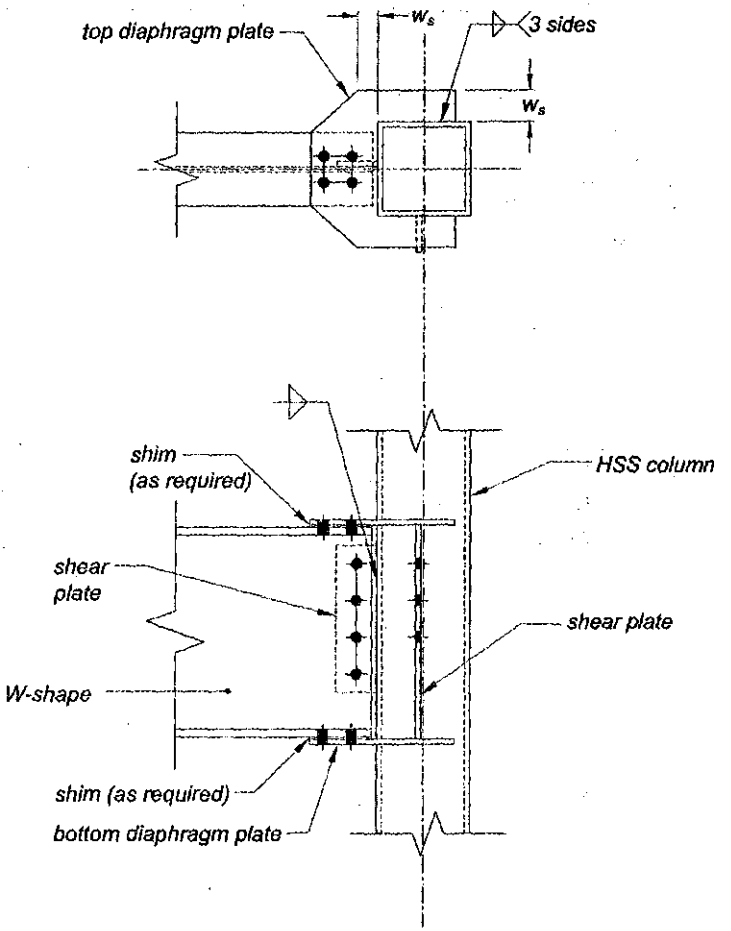

Note: A stiffened seat could also be used in lieu of the shear plate.

Fig. 12-21. Diaphragm plate splice to exterior HSS column.

Suggested Details for HSS to Wide-Flange Moment Connections

The details shown in Figures 12-22 and 12-23 are suggested details only and are not intended to prohibit the use of other connection details.

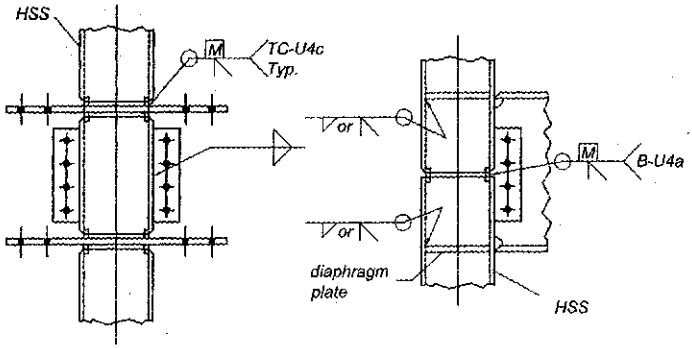

Through-Plate Diaphragm *Interior Plate Diaphragm*

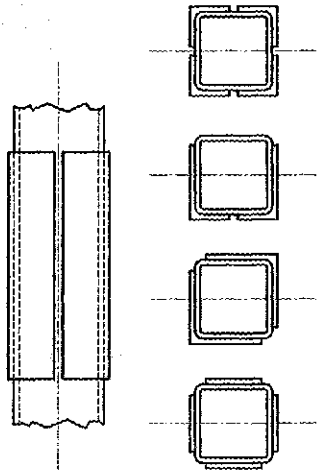

HSS Column Reinforcement

Fig. 12-22. Suggested detail.

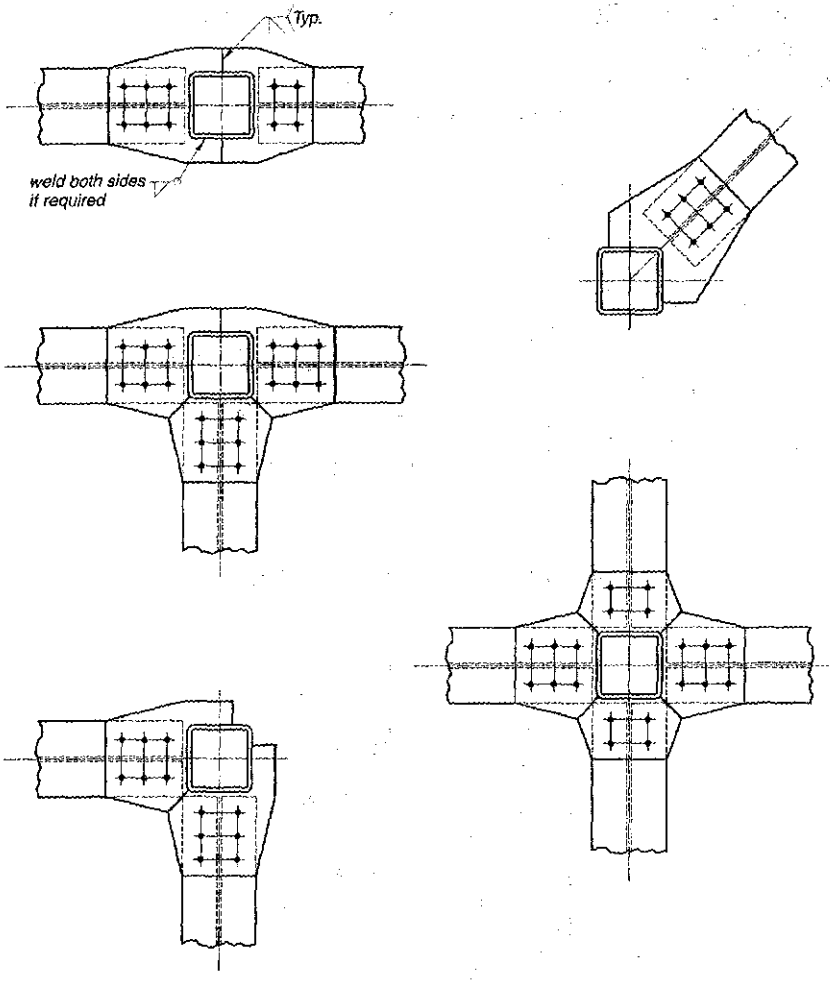

Note: Shear connections not shown for clarity.

Fig. 12-23. Suggested detail.

PART 12 REFERENCES

AISC (1977), *Bridge Fatigue Guide Design and Details*, American Institute of Steel Construction, Chicago, IL.

Carter, C.J. (1999), *Stiffening of Wide-Flange Columns at Moment Connections: Wind and Seismic Applications*, Design Guide 13, AISC, Chicago, IL.

Driscoll, G.C., Pourbohloul, A. and Wang, X. (1983), "Fracture of Moment Connections—Tests on Simulated Beam-to-Column Web Moment Connection Details," *Fritz Engineering Laboratory Report No. 469.7*, Lehigh University, Bethlehem, PA.

Driscoll, G.C. and Beedle, L.S. (1982), "Suggestions for Avoiding Beam-to-Column Web Connection Failures," *Engineering Journal*, AISC, Vol. 19, No. 1, 1st Quarter, pp. 16–19, Chicago, IL.

Hart, W.H. and Milek, W.A. (1965), "Splices in Plastically Designed Continuous Structures," *Engineering Journal*, AISC, Vol. 2, No. 2, April, pp. 33–37, Chicago, IL.

Huang, J.S., Chen, W.F. and Beedle, L.S. (1973), "Behavior and Design of Steel Beam-to-Column Moment Connections," *Bulletin 188*, October, Welding Research Council, New York, NY.

Lincoln Electric Company (1973), *The Procedure Handbook of Arc Welding*, Lincoln Electric Company, Cleveland, OH.

Murray, T.M. and Sumner, E.A. (2003), *Extended End-Plate Moment Connections—Seismic and Wind Applications*, 2nd Ed., Design Guide 4, AISC, Chicago, IL.

Murray, T.M. and Shoemaker, W.L. (2002), *Flush and Extended Multiple-Row Moment End-Plate Connections*, Design Guide 16, AISC and MBMA, Chicago, IL.

Meng, R.L. and Murray, T.M. (1997), "Seismic Performance of Bolted End-Plate Moment Connection," *Proceedings*, AISC National Steel Construction Conference, Chicago, IL, May 7–9, pages 30-1 to 30-14.

Packer, J.A. and Henderson, J.E. (1997), *Hollow Structural Section Connections and Trusses—A Design Guide*, 2nd Ed., Canadian Institute of Steel Construction, Alliston, Ontario, Canada.

Packer, J., Sherman, D. and Leece, M. (2010), *Hollow Structural Section Connections*, Design Guide 24, AISC, Chicago, IL.

PART 13

DESIGN OF BRACING CONNECTIONS AND TRUSS CONNECTIONS

SCOPE 13–2
BRACING CONNECTIONS 13–2
Diagonal Bracing Members 13–2
Force Transfer in Diagonal Bracing Connections 13–3
The Uniform Force Method 13–3
Required Strength 13–3
Special Case 1, Modified Working Point Location 13–5
Special Case 2, Minimizing Shear in the Beam-to-Column Connection 13–7
Special Case 3, No Gusset-to-Column Web Connection 13–7
Analysis of Existing Diagonal Bracing Connections 13–10
Available Strength 13–11
TRUSS CONNECTIONS 13–11
Members in Trusses 13–11
Minimum Connection Strength 13–12
Panel-Point Connections 13–13
Design Checks 13–14
Shop and Field Practices 13–14
Support Connections 13–14
Design Checks 13–15
Shop and Field Practices 13–16
Truss Chord Splices 13–17
Design Considerations for HSS-to-HSS Truss Connections 13–17
PART 13 REFERENCES 13–18

SCOPE

The specification requirements and other design considerations summarized in this Part apply to the design of concentric bracing connections and truss connections.

BRACING CONNECTIONS

Diagonal Bracing Members

Diagonal bracing members can be rods, single angles, channels, double angles, tees, W-shapes or HSS as required by the loads. Slender diagonal bracing members are relatively flexible and, thus, vibration and sag may be considerations. In slender tension-only bracing composed of light angles, these problems can be minimized with "draw" or pretension created by shortening the fabricated length of the diagonal brace from the theoretical length, L, between member working points. In general, the following deductions will be sufficient to accomplish the required draw: no deduction for $L \le 10$ ft; deduct $^1/_{16}$ in. for 10 ft $< L \le 20$ ft; deduct $^1/_8$ in. for 20 ft $< L \le 35$ ft; and, deduct $^3/_{16}$ in. for $L > 35$ ft. This approach is not applicable to heavier diagonal bracing members; since it is difficult to stretch these members; vibration and sag are not usually design considerations in heavier diagonal bracing members. In any diagonal bracing member, however, it is permissible to deduct an additional $^1/_{32}$ in. when necessary to avoid dimensioning to thirty-seconds of an inch.

When double-angle diagonal bracing members are separated, as at "sandwiched" end connections to gussets, intermittent connections should be provided if the unsupported length of the diagonal brace exceeds the limits specified in the User Note in AISC *Specification* Section D4 for tension members. For compression members, the provisions of AISC *Specification* Section E6 must be satisfied. Either bolted or welded stitch-fillers may be provided as stipulated in AISC *Specification* E6. Many fabricators prefer ring or rectangular bolted stitch-fillers when the angles require other punching, as at the end connections. In welded construction, a stitch-filler with protruding ends, as shown in Figure 13-1(a), is preferred because it is easy to fit and weld. The short stitch-filler shown in Figure 13-1(b) is used if a smooth appearance is desired.

When a full-length filler is provided, as in corrosive environments, the maximum spacing of stitch bolts should be as specified in AISC *Specification* Section J3.5. Alternatively, the edges of the filler may be seal welded.

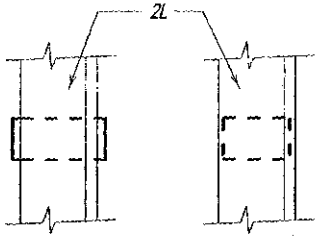

a) Protruding *b) Short*

Fig. 13-1. Welded stitch-fillers.

Force Transfer in Diagonal Bracing Connections

There has been some discussion as to which of several available analysis methods provides the best means for the safe and economical design and analysis of diagonal bracing connections. To better understand the technical issues, starting in 1981, AISC sponsored extensive computer studies of this connection by Richard (1986). Associated with Richard's work, full-scale tests were performed by Bjorhovde and Chakrabarti (1985), Gross and Cheok (1988), and Gross (1990). Also, AISC and ASCE formed a task group to recommend a design method for this connection. In 1990, this task group recommended three methods for further study; refer to Appendix A of Thornton (1991).

Using the results of the aforementioned full scale tests, Thornton (1991) showed that these three methods yield safe designs, and that of the three methods, the Uniform Force Method [see model 3 of Thornton (1991)] best predicts both the available strength and critical limit state of the connection. Furthermore, Thornton (1992) showed that the Uniform Force Method yields the most economical design through comparison of actual designs by the different methods and through consideration of the efficiency of force transmission. For the above reasons, and also because it is the most versatile method, the Uniform Force Method has been adopted for use in this manual.

The Uniform Force Method

The essence of the Uniform Force Method is to select the geometry of the connection so that moments do not exist on the three connection interfaces; i.e., gusset-to-beam, gusset-to-column, and beam-to-column. In the absence of moment, these connections may then be designed for shear and/or tension only, hence the origin of the name Uniform Force Method.

Required Strength

With the control points (c.p.) as illustrated in Figure 13-2 and the working point (w.p.) chosen at the intersection of the centerlines of the beam, column and diagonal brace as shown in Figure 13-2(a), four geometric parameters e_b, e_c, α and β can be identified, where

e_b = one-half the depth of the beam, in.
e_c = one-half the depth of the column, in. Note that, for a column web support, $e_c \approx 0$.
α = distance from the face of the column flange or web to the centroid of the gusset-to-beam connection, in.
β = distance from the face of the beam flange to the centroid of the gusset-to-column connection, in.

For the force distribution shown in the free-body diagrams of Figures 13-2(b), 13-2(c) and 13-2(d) to remain free of moments on the connection interfaces, the following expression must be satisfied:

$$\alpha - \beta \tan\theta = e_b \tan\theta - e_c \qquad (13\text{-}1)$$

Since the variables on the right of the equal sign (e_b, e_c and θ) are all defined by the members being connected and the geometry of the structure, the designer may select values of α and β for which the equation is true, thereby locating the centroids of the gusset-to-beam and gusset-to-column connections.

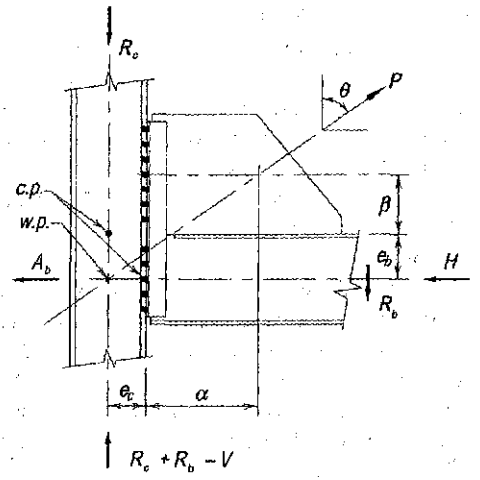

(a) Diagonal bracing connection and external forces

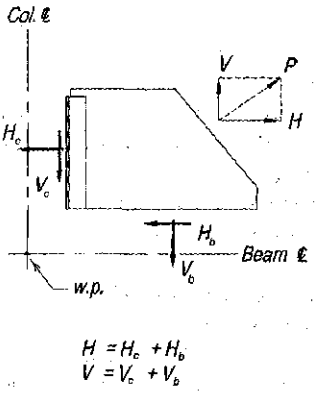

(b) Gusset free-body diagram

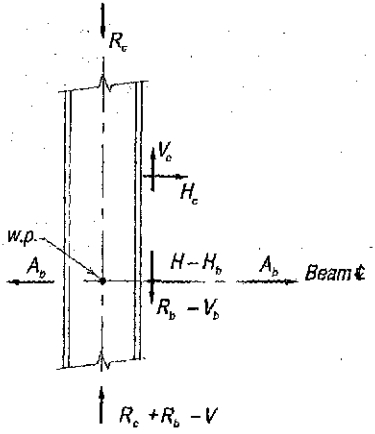

(c) Column free-body diagram

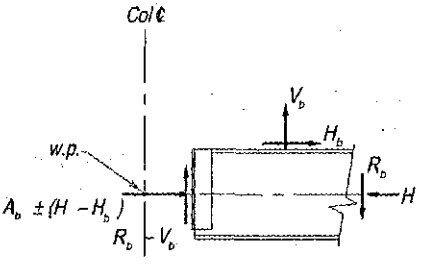

(d) Beam free-body diagram

$R_b = R_{ub}$ or R_{ab}, required end reaction of the beam
$R_c = R_{uc}$ or R_{ac}, required column axial load above the connection
$A_b = A_{ub}$ or A_{ab}, required transverse force from adjacent bay
H = horizontal component of the required axial force
$H_b = H_{ub}$ or H_{ab}, required shear force on the gusset-to-beam connection
$H_c = H_{uc}$ or H_{ac}, required axial force on the gusset-to-column connection
$V_b = V_{ub}$ or V_{ab}, required axial force on the gusset-to-beam connection
$V_c = V_{uc}$ or V_{ac}, required shear force on the gusset-to-column connection
$P = P_u$ or P_a, required axial force
V = vertical component of the required axial force

Fig. 13-2. Force transfer by the Uniform Force Method, work point (w.p.) and control points (c.p.) as indicated.

Once α and β have been determined, the required axial and shear forces for which these connections must be designed can be determined from the following equations:

$$V_c = \frac{\beta}{r} P \tag{13-2}$$

$$H_c = \frac{e_c}{r} P \tag{13-3}$$

$$V_b = \frac{e_b}{r} P \tag{13-4}$$

$$H_b = \frac{\alpha}{r} P \tag{13-5}$$

where

$$r = \sqrt{(\alpha + e_c)^2 + (\beta + e_b)^2} \tag{13-6}$$

The gusset-to-beam connection must be designed for the required shear force, H_b, and the required axial force, V_b, the gusset-to-column connection must be designed for the required shear force, V_c, and the required axial force, H_c, and the beam-to-column connection must be designed for the required shear

$$R_b = V_b$$

and the required axial force

$$A_b \pm (H - H_b)$$

Note that while the axial force, P_u or P_a, is shown as a tensile force, it may also be a compressive force; were this the case, the signs of the resulting gusset forces would change.

Special Case 1, Modified Working Point Location

As illustrated in Figure 13-3(a), the working point in Special Case 1 of the Uniform Force Method is chosen at the corner of the gusset; this may be done to simplify layout or for a column web connection. With this assumption, the terms in the gusset force equations involving e_b and e_c drop out and the interface forces, as shown in Figures 13-3(b), 13-3(c) and 13-3(d), are:

$$V_c = P\cos\theta = V \tag{13-7}$$

$$V_b = 0 \tag{13-8}$$

$$H_b = P\sin\theta = H \tag{13-9}$$

$$H_c = 0 \tag{13-10}$$

The gusset-to-beam connection must be designed for the required shear force, H_b, and the gusset-to-column connection must be designed for the required shear force, V_c. Note, however, that the change in working point requires that the beam be designed for the required moment, M_b, where

$$M_b = H_b e_b \tag{13-11}$$

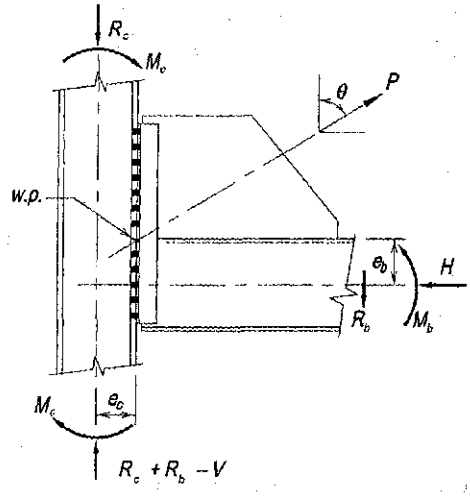

(a) Diagonal bracing connection

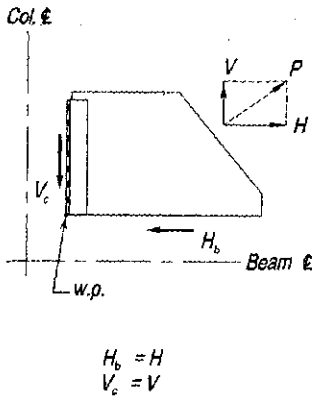

(b) Gusset free-body diagram

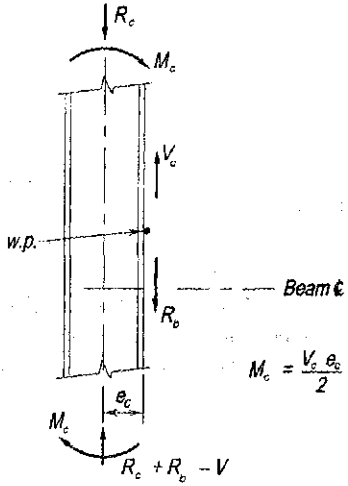

(c) Column free-body diagram

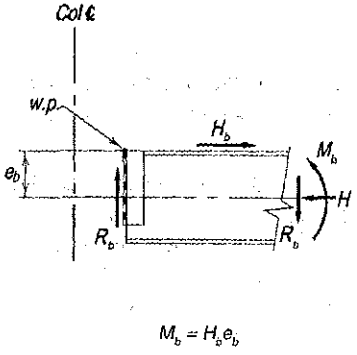

(d) Beam free-body diagram

R_b = R_{ab} or R_{ab}, required end reaction of the beam
R_c = R_{uc} or R_{ac}, required column axial load above the connection
A_b = A_{ub} or A_{ab}, required transverse force from adjacent bay
H = horizontal component of the required axial force
H_b = H_{ub} or H_{ab}, required shear force on the gusset-to-beam connection
V_c = V_{uc} or V_{ac}, required shear force on the gusset-to-column connection
P = P_u or P_a, required axial force
V = vertical component of the required axial force

Fig. 13-3. Force transfer, Uniform Force Method special case 1.

and the column must be designed for the required moment, M_c. For an intermediate floor, this is determined as:

$$M_c = \frac{V_c e_c}{2} \tag{13-12}$$

An example demonstrating this eccentric special case is presented in AISC (1984). This eccentric case was endorsed by the AISC/ASCE task group (Thornton, 1991) as a reduction of the three recommended methods when the work point is located at the gusset corner. While calculations are somewhat simplified, it should be noted that resolution of the required force, P, into the shears, V_c and H_b, may not result in the most economical connection.

Special Case 2, Minimizing Shear in the Beam-to-Column Connection

If the brace force, as illustrated in Figure 13-4(a), were compressive instead of tensile and the required beam reaction, R_b, were high, the addition of the extra shear force, V_b, into the beam might exceed the available strength of the beam and require doubler plates or a haunched connection. Alternatively, the vertical force in the gusset-to-beam connection, V_b, can be limited in a manner which is somewhat analogous to using the gusset itself as a haunch.

As illustrated in Figure 13-4(b), assume that V_b is reduced by an arbitrary amount, ΔV_b. By statics, the vertical force at the gusset-to-column interface will be increased to $V_c + \Delta V_b$, and a moment M_b will result on the gusset-to-beam connection, where

$$M_b = (\Delta V_b)\alpha \tag{13-13}$$

If ΔV_b is taken equal to V_b, none of the vertical component of the brace force is transmitted to the beam; the resulting procedure is that presented by AISC (1984) for concentric gravity axes, extended to connections to column flanges. This method was also recommended by the AISC/ASCE task group (Thornton, 1991).

Design by this method may be uneconomical. It is very punishing to the gusset and beam because of the moment, M_b, induced on the gusset-to-beam connection. This moment will require a larger connection and a thicker gusset. Additionally, the limit state of local web yielding may limit the strength of the beam. This special case interrupts the natural flow of forces assumed in the Uniform Force Method and thus is best used when the beam-to-column interface is already highly loaded, independently of the brace, by a high shear, R_b, in the beam-to-column connection.

Special Case 3, No Gusset-to-Column Web Connection

When the connection is to a column web and the brace is shallow (as for large θ) or the beam is deep, it may be more economical to eliminate the gusset-to-column connection entirely and connect the gusset to the beam only. The Uniform Force Method can be applied to this situation by setting β and e_c equal to zero as illustrated in Figure 13-5. Since there is to be no gusset-to-column connection, V_c and H_c also equal zero. Thus, $V_b = V$ and $H_b = H$.

If $\bar{\alpha} = \alpha = e_b \tan\theta$, there is no moment on the gusset-to-beam interface and the gusset-to-beam connection can be designed for the required shear force, H_b, and the required axial force, V_b. If $\bar{\alpha} \neq \alpha = e_b \tan\theta$, the gusset-to-beam interface must be designed for the moment, M_b, in addition to H_b and V_b, where

$$M_b = V_b\,(\alpha - \bar{\alpha}) \tag{13-14}$$

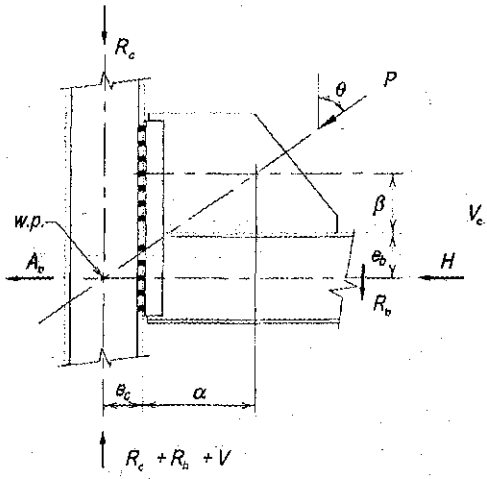

(a) Diagonal bracing connection

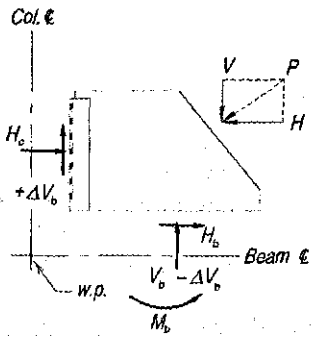

(b) Gusset free-body diagram

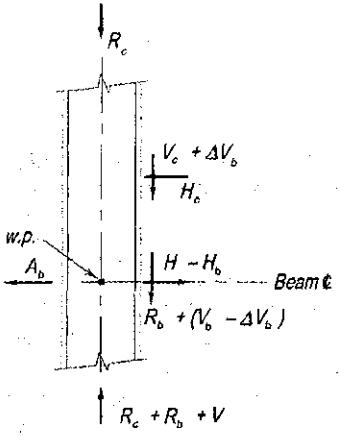

(c) Column free-body diagram

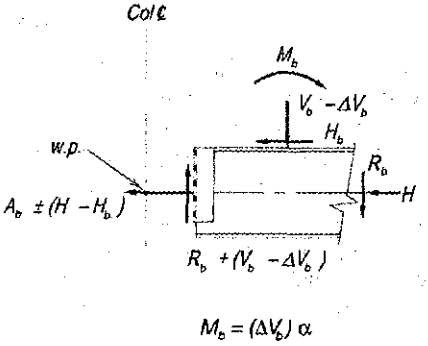

(d) Beam free-body diagram

R_b = R_{ub} or R_{ua}, required end reaction of the beam
R_c = R_{uc} or R_{ac}, required column axial load above the connection
A_b = A_{ub} or A_{ab}, required transverse force from adjacent bay
H = horizontal component of the required axial force
H_b = H_{ub} or H_{ab}, required shear force on the gusset-to-beam connection
H_c = H_{uc} or H_{ac}, required axial force on the gusset-to-column connection
V_b = V_{ub} or V_{ab}, required axial force on the gusset-to-beam connection
V_c = V_{uc} or V_{ac}, required shear force on the gusset-to-column connection
P = P_u or P_a, required axial force
V = vertical component of the required axial force

Fig. 13-4. Force transfer, Uniform Force Method special case 2.

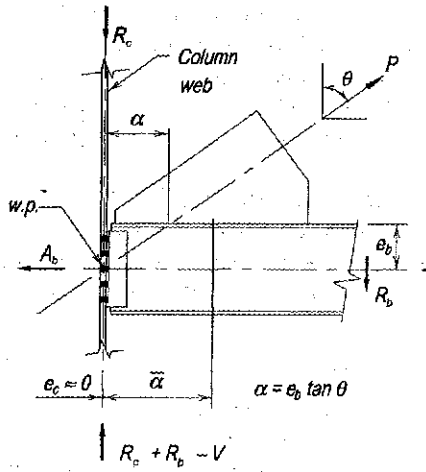

(a) Diagonal bracing connection

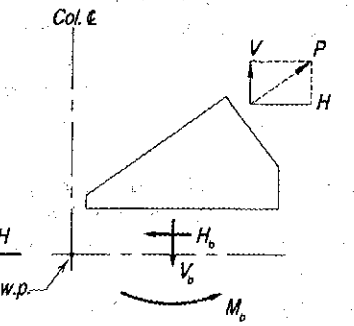

(b) Gusset free-body diagram

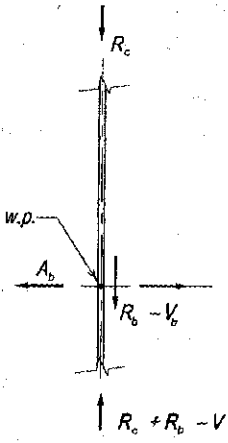

(c) Column free-body diagram

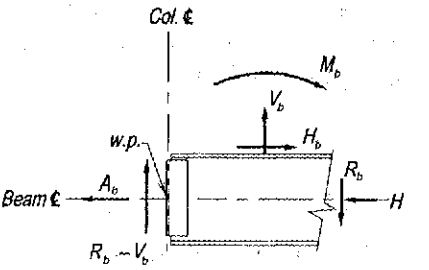

(d) Beam free-body diagram

$R_b = R_{ab}$ or R_{ua}, required end reaction of the beam
$R_c = R_{uc}$ or R_{ac}, required column axial load above the connection
$A_b = A_{ub}$ or A_{ab}, required transverse force from adjacent bay
H = horizontal component of the required axial force
$H_b = H_{ub}$ or H_{ab}, required shear force on the gusset-to-beam connection
$V_b = V_{ub}$ or V_{ab}, required axial force on the gusset-to-beam connection
$P = P_u$ or P_a, required axial force
V = vertical component of the required axial force

Fig. 13-5. Force transfer, Uniform Force Method special case 3.

The beam-to-column connection must be designed for the required shear force, $R_b + V_b$.

Note that, since the connection is to a column web, e_c is zero and hence H_c is also zero. For a connection to a column flange, if the gusset-to-column-flange connection is eliminated, the beam-to-column connection must be a moment connection designed for the moment, Ve_c, in addition to the shear, V. Thus, uniform forces on all interfaces are no longer possible.

Analysis of Existing Diagonal Bracing Connections

A combination of α and β which provides for no moments on the three interfaces can usually be achieved when a connection is being designed. However, when analyzing an existing connection or when other constraints exist on gusset dimensions, the values of α and β may not satisfy the basic relationship

$$\alpha - \beta \tan\theta = e_b \tan\theta - e_c \tag{13-1}$$

When this happens, uniform interface forces will not satisfy equilibrium and moments will exist on one or both gusset edges or at the beam-to-column interface.

To illustrate this point, consider an existing design where the actual centroids of the gusset-to-beam and gusset-to-column connections are at $\bar{\alpha}$ and $\bar{\beta}$, respectively. If the connection at one edge of the gusset is more rigid than the other, it is logical to assume that the more rigid edge takes all of the moment necessary for equilibrium. For instance, the gusset of Figure 13-2 is shown welded to the beam and bolted with double angles to the column. For this configuration, the gusset-to-beam connection will be much more rigid than the gusset-to-column connection.

Take α and β as the ideal centroids of the gusset-to-beam and gusset-to-column connections, respectively. Setting $\beta = \bar{\beta}$, the α required for no moment on the gusset-to-beam connection may be calculated as

$$\alpha = K + \bar{\beta} \tan\theta \tag{13-15}$$

where

$$K = e_b \tan\theta - e_c \tag{13-16}$$

If $\alpha \neq \bar{\alpha}$, a moment, M_b, will exist on the gusset-to-beam connection where

$$M_b = V_b (\alpha - \bar{\alpha}) \tag{13-17}$$

Conversely, suppose the gusset-to-column connection were judged to be more rigid. Setting $\alpha = \bar{\alpha}$, the β required for no moment on the gusset-to-column connection may be calculated as

$$\beta = \frac{\bar{\alpha} - K}{\tan\theta} \tag{13-18}$$

If $\beta \neq \bar{\beta}$, a moment, M_c, will exist on the gusset-to-column connection where

$$M_c = H_c(\beta - \bar{\beta}) \tag{13-19}$$

If both connections were equally rigid and no obvious allocation of moment could be made, the moment could be distributed based on minimized eccentricities $\alpha - \bar{\alpha}$ and $\beta - \bar{\beta}$ by minimizing the objective function, ξ, where

$$\xi=\left(\frac{\alpha-\bar{\alpha}}{\bar{\alpha}}\right)^2+\left(\frac{\beta-\bar{\beta}}{\bar{\beta}}\right)^2-\lambda\left(\alpha-\beta\tan\theta-K\right) \quad (13\text{-}20)$$

In the preceding equation, λ is a Lagrange multiplier.

The values of α and β that minimize ξ are

$$\alpha=\frac{K'\tan\theta+K\left(\frac{\bar{\alpha}}{\bar{\beta}}\right)^2}{D} \quad (13\text{-}21)$$

and

$$\beta=\frac{K'-K\tan\theta}{D} \quad (13\text{-}22)$$

where

$$K'=\bar{\alpha}\left(\tan\theta+\frac{\bar{\alpha}}{\bar{\beta}}\right) \quad (13\text{-}23)$$

$$D=\tan^2\theta+\left(\frac{\bar{\alpha}}{\bar{\beta}}\right)^2 \quad (13\text{-}24)$$

Available Strength

The available strength of a diagonal bracing connection is determined from the applicable limit states for the bolts (see Part 7), welds (see Part 8), and connecting elements (see Part 9). In all cases, the available strength, ϕR_n or R_n/Ω, must equal or exceed the required strength, R_u or R_a. Note that when the gusset is directly welded to the beam or column, the connection should be designed for the larger of the peak stress and 1.25 times the average stress, but the weld size need not be larger than that required to develop the strength of the gusset. This 25% increase is recommended to provide ductility to allow adequate force redistribution in the weld group (Hewitt and Thornton, 2004).

TRUSS CONNECTIONS

Members in Trusses

For light loads, trusses are commonly composed of tees for the top and bottom chords with single-angle or double-angle web members. In welded construction, the single-angle and double-angle web members may, in many cases, be welded to the stem of the tee, thus, eliminating the need for gussets. When single-angle web members are used, all web members should be placed on the same side of the chord; staggering the web members causes a torque on the chord, as illustrated in Figure 13-6. Also see "Design Considerations for HSS-to-HSS Truss Connections" at the end of Part 13.

Double-angle truss members are usually designed to act as a unit. When unequal-leg angles are used, long legs are normally assembled back-to-back. A simple notation for the angle assembly is LLBB (long legs back-to-back) and SLBB (short legs back-to-back).

Alternatively, the notation might be graphical in nature as ⌊⌊ and ⌊⌊ . For large loads, W-shapes may be used with the web vertical and gussets welded to the flange for the truss connections. Web members may be single angles or double angles, although W-shapes are sometimes used for both chord and web members as shown in Figure 13-7. Heavy shapes in trusses must meet the design and fabrication restrictions and special requirements in AISC *Specification* Sections A3.1c and A3.1d. With member orientation as shown for the field-welded truss joint in Figure 13-7(a), connections usually are made by groove welding flanges to flanges and fillet welding webs directly or indirectly by the use of gussets. Fit-up of joints in this type of construction are very sensitive to dimensional variations in the rolled shapes; fabricators sometimes prefer to use built-up shapes in these cases.

The web connection plate in Figure 13-7(a) is a typical detail. While the diagonal member could theoretically be cut so that the diagonal web would be extended into the web of the chord for a direct connection, such a detail is difficult to fabricate. Additionally, welding access becomes very limited; note the obvious difficulty of welding the gusset or diagonal directly to the chord web. As illustrated, this weld is usually omitted.

When stiffeners and doubler plates are required for concentrated flange forces, the designer should consider selecting a heavier section to eliminate the need for stiffening. Although this will increase the material cost of the member, the heavier section will likely provide a more economical solution due to the reduction in labor cost associated with the elimination of stiffening (Ricker, 1992; Thornton, 1992).

Minimum Connection Strength

In the absence of defined design loads, a minimum required strength of 10 kips for LRFD or 6 kips for ASD should be considered, as noted in AISC *Specification* Commentary

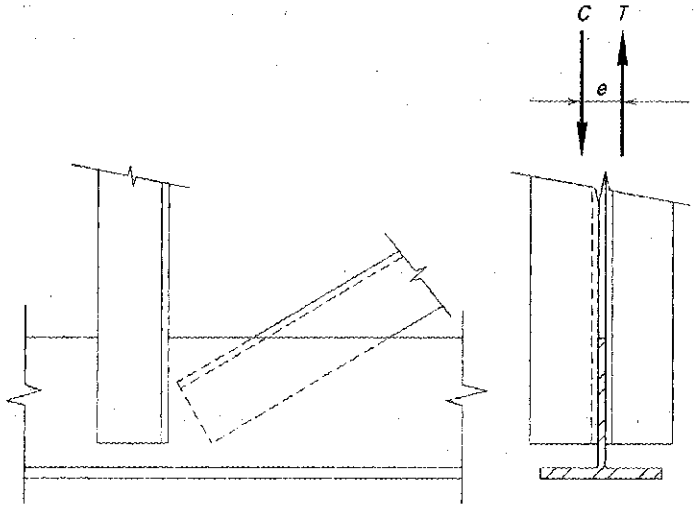

Fig. 13-6. Staggered web members result in a torque on the truss chord.

Section J1.1. For smaller elements, a required strength more appropriate to the size and use of the part should be used. Additionally, when trusses are shop-assembled or field-assembled on the ground for subsequent erection, consideration should be given to loads induced during handling, shipping and erection.

Panel-Point Connections

A panel-point connection connects diagonal and/or vertical web members to the chord member of a truss. These web members deliver axial forces, tensile or compressive, to the truss chord. In bolted construction, a gusset is usually required because of bolt spacing and edge distance requirements. In welded construction, it is sometimes possible to eliminate the need for a gusset.

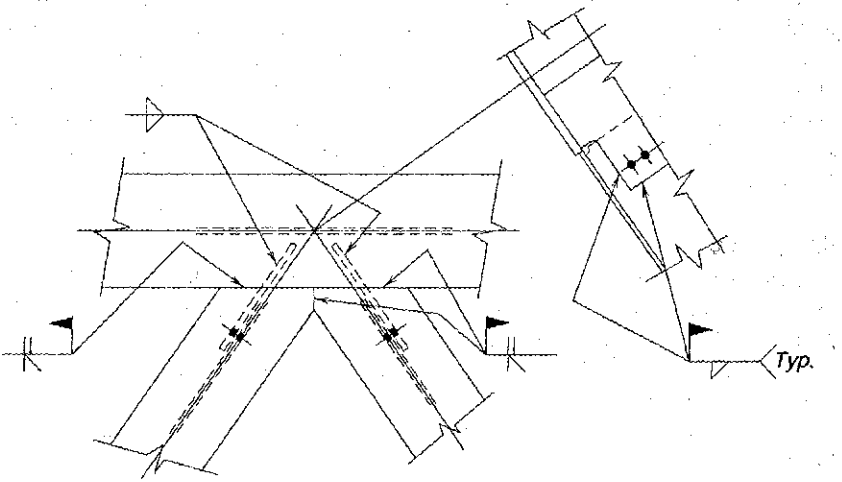

(a) Shop and field welding

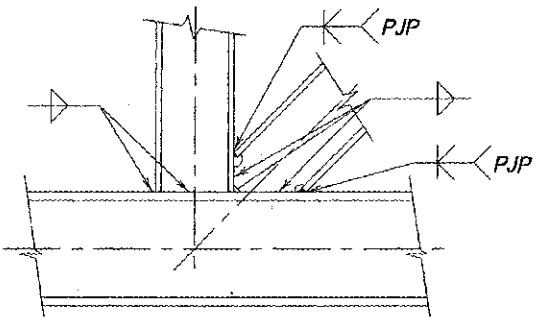

Note: Check vertical and chord for reinforcing requirements

(b) Shop welding

Fig. 13-7. Truss panel-point connections for W-shape truss members.

Design Checks

The available strength of a panel-point connection is determined from the applicable limit states for the bolts (see Part 7), welds (see Part 8), and connecting elements (see Part 9). In all cases, the available strength, ϕR_n or R_n/Ω, must exceed the required strength, R_u or R_a.

In the panel-point connection of Figure 13-8, the neutral axes of the vertical and diagonal truss members intersect on the neutral axis of the truss chord. As a result, the forces in all members of the truss are axial. It is common practice, however, to modify working lines slightly from the gravity axes to establish repetitive panels and avoid fractional dimensions less than $\frac{1}{8}$ in. or to accommodate a larger panel-point connection or a connection for bottom-chord lateral bracing, a purlin, or a sway-frame. This eccentricity and the resulting moment should be considered in the design of the truss chord.

In contrast, for the design of the truss web members, AISC *Specification* Section J1.7 permits that the center of gravity of the end connection of a statically loaded truss member need not coincide with the gravity axis of the connected member. This is because tests have shown that there is no appreciable difference in the available strength between balanced and unbalanced connections subjected to static loading. Accordingly, the truss web members and their end connections may be designed for the axial load, neglecting the effect of this minor eccentricity.

Shop and Field Practices

In bolted construction, it is convenient to use standard gage lines of the angles as truss working lines; where wider angles with two gage lines are used, the gage line nearest the heel of the angle is the one which is substituted for the gravity axis.

To provide for stiffness in the finished truss, the web members of the truss are extended to near the edge of the fillet of the tee (k-distance). If welded, the required welds are then applied along the heel and toe of each angle, beginning at their ends rather than at the edge of the tee stem.

Support Connections

A truss support connection connects the ends of trusses to supporting members.

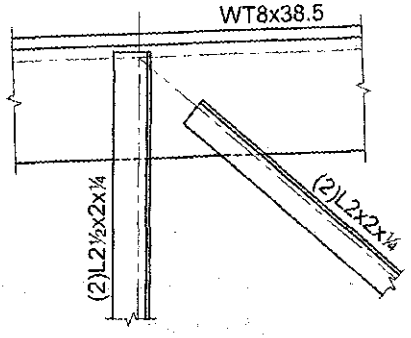

Fig. 13-8. Truss panel-point connection.

Design Checks

The available strength of a support connection is determined from the applicable limit states for the bolts (see Part 7), welds (see Part 8), and connecting elements (see Part 9). Additionally, truss support connections produce tensile or compressive single concentrated forces at the beam end; the limit states of the available flange strength in local bending and the limit states of the available web strength in local yielding, crippling, and compression buckling may have to be checked. In all cases, the available strength, ϕR_n or R_n/Ω, must exceed the required strength, R_u or R_a.

At the end of a truss supported by a column, all member axes may not intersect at a common point. When this is the case, an eccentricity results. Typically, it is the neutral axis of the column that does not meet at the working point.

If trusses with similar reactions line up on opposite sides of the column, consideration of eccentricity would not be required since any moment would be transferred through the column and into the other truss. However, if there is little or no load on the opposite side of the column, the resulting eccentricity must be considered.

In Figure 13-9, the truss chord and diagonal intersect at a common working point on the face of the column flange. In this detail, there is no eccentricity in the gusset, gusset-to-column connection, truss chord, or diagonal. However, the column must be designed for the moment due to the eccentricity of the truss reaction from the neutral axis of the column.

For the truss support connection illustrated in Figure 13-10, this eccentricity results in a moment. Assuming the connection between the members is adequate, joint rotation is resisted by the combined flexural strength of the column, the truss top chord, and the truss diagonal. However, the distribution of moment between these members will be proportional to the stiffness of the members. Thus, when the stiffness of the column is much greater than the stiffness of the other elements of the truss support connection, it is good practice to design the column and gusset-to-column connection for the full eccentricity.

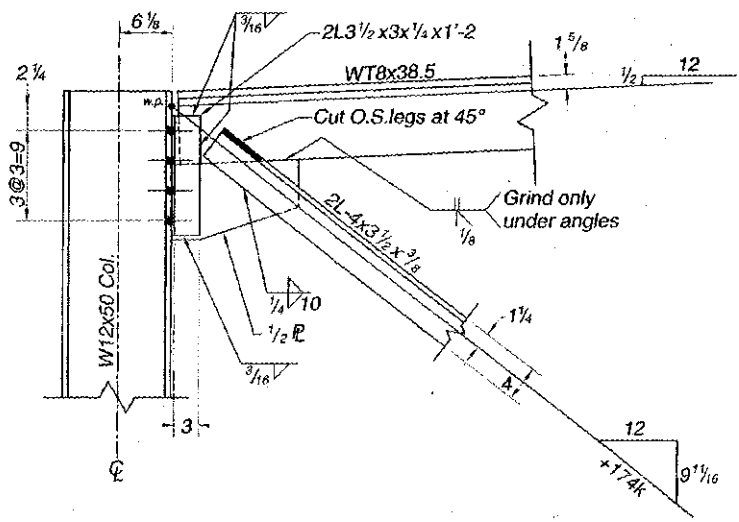

Fig. 13-9. Truss support connection, working point (w.p.) on column face.

Due to its importance, the truss support connection is frequently shown in detail on the design drawing.

Shop and Field Practices

When a truss is erected in place and loaded, truss members in tension will lengthen and truss members in compression will shorten. At the support connection, this may cause the tension chord of a "square-ended" truss to encroach on its connection to the supporting column. When the connection is shop-attached to the truss, erection clearance must be provided with shims to fill out whatever space remains after the truss is erected and loaded. In field erected connections, however, provision must be made for the necessary adjustment in the connection.

When the tension chord delivers no calculated force to the connection, adjustment can usually be provided with slotted holes. For short spans with relatively light loads, the comparatively small deflections can be absorbed by the normal hole clearances provided for bolted construction. Slightly greater misalignment can be corrected in the field by reaming the holes. If appreciable deflection is expected, the connection may be welded. Alternatively, bolt holes may be field-drilled, but this is an expensive operation which should be avoided if at all possible.

An approximation of the elongation, Δ, can be determined as

$$\Delta = \frac{Pl}{AE} \tag{13-25}$$

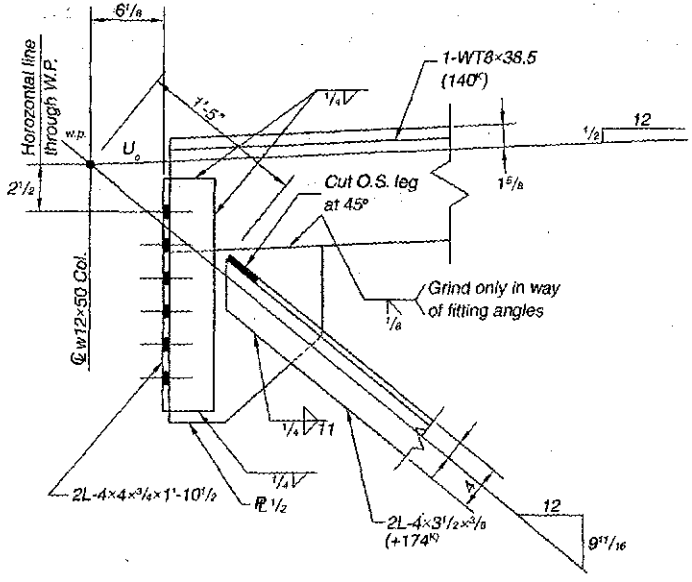

Fig. 13-10. Truss-support connection, working point (w.p.) at column centerline.

where

Δ = elongation in inches
P = axial force due to service loads, kips
A = gross area of the truss chord, in.^{2}
l = length, in.^{2}

The total change in length of the truss chord is $\Sigma\Delta_i$, the sum of the changes in the lengths of the individual panel segments of the truss chord. The misalignment at each support connection of the tension chord is one-half the total elongation.

Truss Chord Splices

Truss chord splices are expensive to fabricate and should be avoided whenever possible. In general, chord splices in ordinary building trusses are confined to cases where:

1. the finished truss is too large to be shipped in one piece;
2. the truss chord exceeds the available material length;
3. the reduction in member size of the chord justifies the added cost of a splice; or
4. a sharp change in direction occurs in the working line of the chord and bending does not provide a satisfactory alternative.

Splices at truss chord ends that are finished to bear should be designed in accordance with AISC *Specification* Section J1.4.

Design Considerations for HSS-to-HSS Truss Connections

HSS member sizes are often critical in connection design. Connection design should be performed during main member selection as the connection limit states may force an increase in the member wall thickness over the main member design thickness. At initial design, Packer, et al. (2010b) recommends that chords should have thick walls rather than thin walls; web members should have thin walls rather than thick walls; web members should be wide relative to the chord members, but still able to sit on the "flat" face of the chord section if possible; and gap connections (for K and N situations) are preferred to overlap connections because the members are easier to prepare, fit and weld.

The connection types covered in Chapter K of the AISC *Specification* and in AISC Design Guide 24, *Hollow Structural Section Connections* (Packer et al., 2010a), are only some of the potential configurations of HSS-to-HSS connections. For reinforced connections and connections not covered in these publications, refer to CIDECT Design Guide 3, *Design Guide for Rectangular Hollow Section (RHS) Joints under Predominantly Static Loading* (Packer et al., 2010b).

PART 13 REFERENCES

AISC (1984), *Engineering for Steel Construction*, pp. 7.55–7.62, AISC, Chicago, IL.

Bjorhovde, R. and Chakrabarti, S.K. (1985), "Tests of Full-Size Gusset Plate Connections," *Journal of Structural Engineering*, Vol. 111, No. 3, pp. 667–684, ASCE, New York, NY.

Gross, J.L. and Cheok, G. (1988), *Experimental Study of Gusseted Connections for Laterally Braced Steel Buildings*, National Institute of Standards and Technology Report NISTIR 88-3849, NIST, Gaithersburg, MD.

Gross, J.L. (1990), "Experimental Study of Gusseted Connections," *Engineering Journal*, Vol. 27, No. 3, 3rd Quarter, pp. 89–97, AISC, Chicago, IL.

Hewitt, C.M. and Thornton, W.A. (2004), "Rationale Behind and Proper Application of the Ductility Factor for Bracing Connections Subjected to Shear and Transverse Loading," *Engineering Journal*, Vol. 41, No. 1, 1st Quarter, pp. 3–6, AISC, Chicago, IL.

Packer, J., Sherman, D. and Leece, M. (2010a), *Hollow Structural Section Connections*, Design Guide 24, AISC, Chicago, IL.

Packer, J.A., Wardenier, J., Zhao, X.-L., van der Vegte, G.J. and Y. Kurobane (2010b), *Design Guide for Rectangular Hollow Section (RHS) Joints Under Predominantly Static Loading*, Design Guide 3, CIDECT, 2nd Ed., LSS Verlag, Köln, Germany.

Richard, R.M. (1986), "Analysis of Large Bracing Connection Designs for Heavy Construction," *National Steel Construction Conference Proceedings*, pp. 31.1–31.24, AISC, Chicago, IL.

Ricker, D.T. (1992), "Value Engineering and Steel Economy," *Modern Steel Construction*, Vol. 32, No. 2 February, AISC, Chicago, IL.

Thornton, W.A. (1991), "On the Analysis and Design of Bracing Connections," *National Steel Construction Conference Proceedings*, pp. 26.1–26.33, AISC, Chicago, IL.

Thornton, W.A. (1992), "Designing for Cost Efficient Fabrication and Construction," *Constructional Steel Design—An International Guide*, Chapter 7, pp. 845–854, Elsevier, London, UK.

PART 14

DESIGN OF BEAM BEARING PLATES, COLUMN BASE PLATES, ANCHOR RODS AND COLUMN SPLICES

SCOPE 14–3
BEAM BEARING PLATES 14–3
Force Transfer 14–3
Recommended Bearing Plate Dimensions and Thickness 14–3
Available Strength 14–4
COLUMN BASE PLATES FOR AXIAL COMPRESSION 14–4
Force Transfer 14–4
Recommended Base Plate Dimensions and Thickness 14–5
Available Strength 14–6
Finishing Requirements 14–6
Holes for Anchor Rods and Grouting 14–6
Grouting and Leveling 14–6
COLUMN BASE PLATES FOR AXIAL TENSION, SHEAR OR MOMENT 14–8
ANCHOR RODS 14–9
Minimum Edge Distance and Embedment Length 14–10
Washer Requirements 14–10
Hooked Anchor Rods 14–10
Headed or Threaded and Nutted Anchor Rods 14–10
Anchor Rod Nut Installation 14–10
COLUMN SPLICES 14–12
Fit-Up of Column Splices 14–12
Lifting Devices 14–12
Column Alignment and Stability During Erection 14–14
Force Transfer in Column Splices 14–14
Flange-Plated Column Splices 14–16
Directly Welded Flange Column Splices 14–17
Butt-Plated Column Splices 14–18

DESIGN CONSIDERATIONS FOR HSS CAP PLATES 14–18
Flexural Strength of the Cap Plate 14–18
Compression Yielding and Crippling of the HSS Wall 14–19
PART 14 REFERENCES 14–20
DESIGN TABLES 14–21
Table 14-1. Finish Allowances 14–21
Table 14-2. Recommended Maximum Sizes for Anchor-Rod Holes in Base Plates 14–21
Table 14-3. Typical Column Splices 14–22

SCOPE

The specification requirements and other design considerations summarized in this Part apply to the design of beam bearing plates, column base plates, anchor rods and column splices. For complete coverage of column base plate connections, see AISC Design Guide 1, *Base Plate and Anchor Rod Design* (Fisher and Kloiber, 2006).

BEAM BEARING PLATES

A beam bearing plate is made with a plate as illustrated in Figure 14-1.

Force Transfer

The required strength (beam end reaction), R_u or R_a, is distributed from the beam bottom flange to the bearing plate over an area equal to $l_b \times 2k$, where l_b is the bearing length (length of contact between the beam bottom flange and the bearing plate), in. The bearing plate is then assumed to distribute the beam end reaction to the concrete or masonry as a uniform bearing pressure by cantilevered bending of the plate. The bearing plate cantilever dimension is taken as

$$n = \frac{B}{2} - k \tag{14-1}$$

where B is the bearing plate width, in.

In the rare case where a bearing plate is not required, the beam end reaction, R_u or R_a, is assumed to be uniformly distributed from the beam bottom flange to the concrete or masonry as a uniform bearing pressure by cantilevered bending of the beam flanges. The beam-flange cantilever dimension is calculated as for a bearing plate, but using the beam flange width, b_f, in place of B.

Recommended Bearing Plate Dimensions and Thickness

The length of bearing, l_b, may be established by available wall thickness, clearance requirements, or by the minimum requirements based on local web yielding or web crippling. The

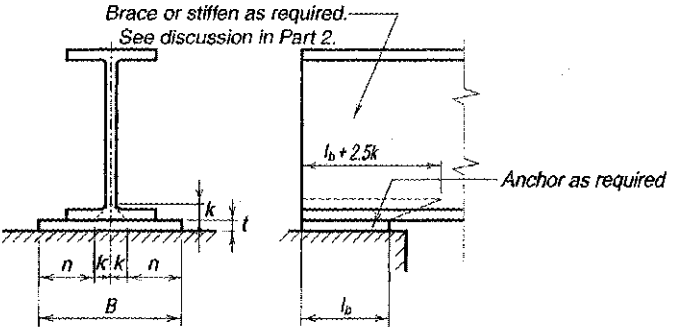

Fig. 14-1. Beam bearing plate variables.

selected dimensions of the bearing plate, B and l_b, should preferably be in full inches. Bearing plate thickness should be specified in multiples of 1/8 in. up to 1 1/4-in. thickness and in multiples of 1/4 in. thereafter.

Available Strength

The available strength of a beam bearing plate is determined from the applicable limit states for connecting elements (see Part 9). In all cases, the available strength, ϕR_n or R_n/Ω, must exceed the required strength, R_u or R_a. The stability of the beam end must also be addressed as discussed in "Stability Bracing" in Part 2.

COLUMN BASE PLATES FOR AXIAL COMPRESSION

A column base plate is made with a plate and a minimum of four anchor rods as illustrated in Figure 14-2. The base plate is often attached to the bottom of the column in the shop. Large heavy columns can be difficult to handle and set plumb with the base plate attached in the shop. When the column is over a certain weight, it may be better to detail the base plate loose for setting and leveling before the column is set. The weight where loose base plates should be considered varies by field practice but it should be considered where the assembly weighs more than 4 tons.

Force Transfer

In Figure 14-3, the required strength (column axial force), P_u or P_a, is distributed from the column end to the column base plate in direct bearing. The column base plate is then assumed to distribute the column axial force to the concrete or masonry as a uniform bearing pressure by cantilevered bending of the plate. The critical base plate cantilever dimension, l, is determined as the larger of m, n and $\lambda n'$ where

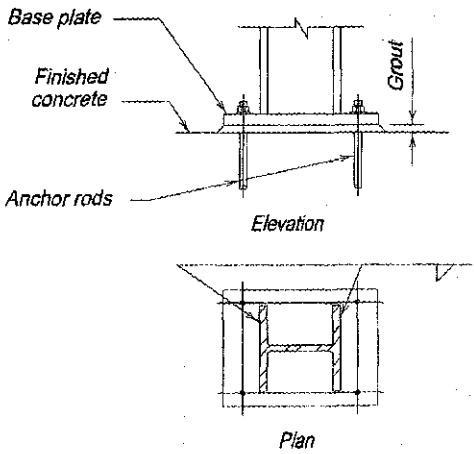

Fig. 14-2. Typical column base for axial compressive loads.

$$m = \frac{N - 0.95d}{2} \tag{14-2}$$

$$n = \frac{B - 0.8b_f}{2} \tag{14-3}$$

$$n' = \frac{\sqrt{db_f}}{4} \tag{14-4}$$

$$\lambda = \frac{2\sqrt{X}}{1 + \sqrt{1 - X}} \leq 1 \tag{14-5}$$

LRFD	ASD
$X = \left(\frac{4db_f}{(d + b_f)^2}\right)\frac{P_u}{\phi_c P_p}$ (14-6a)	$X = \left(\frac{4db_f}{(d + b_f)^2}\right)\frac{\Omega_c P_a}{P_p}$ (14-6b)

Note that, because both the term in parentheses and the ratio of the required strength, P_u or P_a, to the available strength, $\phi_c P_p$ or P_p/Ω_c, are always less than or equal to 1, the value of X will always be less than or equal to 1. Note also that λ can always be taken conservatively as 1. For further information, see Thornton (1990a), Thornton (1990b), and AISC Design Guide 1, *Base Plate and Anchor Rod Design* (Fisher and Kloiber, 2006).

Recommended Base Plate Dimensions and Thickness

The selected dimensions of the base plate, B and N, should preferably be in full inches. Base plate thickness should be specified in multiples of $\frac{1}{8}$ in. up to $1\frac{1}{4}$-in. thickness and in multiples of $\frac{1}{4}$ in. thereafter.

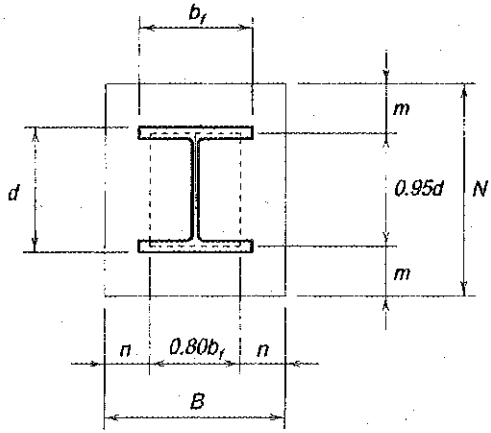

Fig. 14-3. Column base plate design variables.

Available Strength

The available strength of an axially loaded column base plate is determined from the applicable limit states for connecting elements (see Part 9). From Thornton (1990a), the minimum base plate thickness can be calculated as

LRFD	ASD
$t_{min} = l\sqrt{\frac{2P_u}{0.9F_yBN}}$ (14-7a)	$t_{min} = l\sqrt{\frac{3.33P_a}{F_yBN}}$ (14-7b)

The length, l, the critical base plate cantilever dimension, is determined as the larger of m, n and $\lambda n'$.

In all cases, the available strength, ϕR_n or R_n/Ω, must exceed the required strength, R_u or R_a.

Finishing Requirements

Base plate finishing requirements are given in AISC *Specification* Section M2.8. When finishing is required, the plate material must be ordered thicker than the specified base plate thickness to allow for the material removed in finishing. Finishing allowances are given in Table 14-1 per ASTM A6 flatness tolerances for steel base plates with F_u equal to or less than 60 ksi based upon the width, thickness, and whether one or both sides are to be finished. Finishing allowances for steel base plates with F_u greater than 60 ksi should be increased by 50%.

The criteria for fit-up of column splices given in AISC *Specification* Section M4.4 are also applicable to column base plates.

Holes for Anchor Rods and Grouting

Recommended maximum anchor rod hole sizes are given in Table 14-2. These hole sizes will accommodate reasonable misalignments in the setting of the anchor rods and allow better adjustment of the column base to the correct centerlines. It is normally unnecessary to deduct the area of holes when determining the required base plate area. An adequate washer should be provided for each anchor rod.

When base plates with large areas are used, at least one grout hole should be provided near the center of the base plate through which grout may be placed. This will provide for a more even distribution of the grout and also prevent air pockets. Note that a grout hole may not be required when the grout is dry-packed. Grout holes do not require the same accuracy for size and location as anchor rod holes.

Holes in base plates for anchor rods and grouting often must be flame-cut, because drill sizes and punching capabilities may be limited to smaller diameters. Flame-cut holes may have a slight taper and should be inspected to assure proper clearances for anchor rods.

Grouting and Leveling

High-strength, non-shrink grout is placed between the column base plate and the supporting foundation. When base plates are shipped attached to the column, three methods of column support are:

1. The use of leveling nuts and, in some cases, washers on the anchor rods beneath the base plate, as illustrated in Figure 14-4.
2. The use of shim stacks between the base plate and the supporting foundation.
3. The use of a steel leveling plate (normally ¼ in. thick), set to elevation and grouted prior to the setting of the column. The leveling plate should meet the flatness tolerances specified in ASTM A6. It may be larger than the base plate to accommodate anchor rod placement tolerances and can be used as a setting template for the anchor rods.

For further information on grouting and leveling of column base plates, see AISC Design Guide 10, *Erection Bracing of Low-Rise Structural Steel Frames* (Fisher and West, 1997).

When base plates are shipped loose, the base plates are usually grouted after the base plate has been aligned and leveled with one of the preceding methods. For heavy loose base plates, three-point leveling bolts, illustrated in Figure 14-5, are commonly used. These threaded attachments may consist of a nut or an angle and nut welded to the base plate. Leveling bolts must be of sufficient length to compensate for the space provided for grouting. Rounding the point of the leveling bolt will prevent it from "walking" or moving laterally as it is turned. Additionally, a small steel pad under the point reduces friction and prevents damage to the concrete.

Heavy loose base plates should be provided with some means of handling at the erection site. Lifting holes can be provided in the vertical legs of shop-attached connection angles. Lifting lugs can also be used and can remain in place after erection, unless they create an interference or removal is required in the contract documents.

Leveling bolts or nuts should not be used to support the column during erection. If grouting is delayed until after steel erection, the base plate must be shimmed to properly distribute loads to the foundation without overstressing either the base plate or the concrete. This difficulty of supporting columns while leveling and grouting their bases makes it advisable that footings be finished to near the proper elevation (Ricker, 1989). The top of the rough footing should be set approximately 1 to 2 in. below the bottom of the base plate to provide for adjustment. Alternatively, an angle frame as illustrated in Figure 14-6 could be constructed to the proper elevation and filled with grout prior to erection.

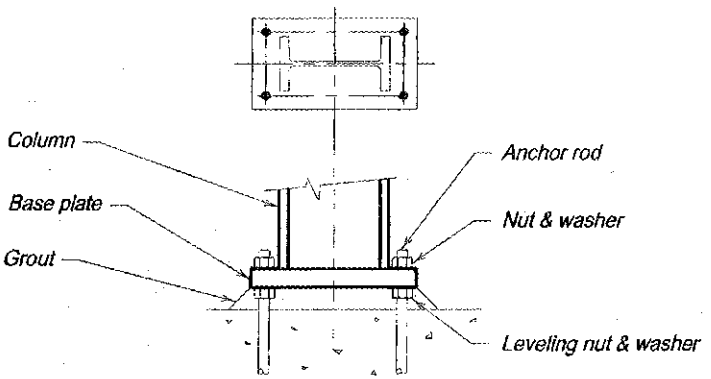

Fig. 14-4. Leveling nuts and washers.

COLUMN BASE PLATES FOR AXIAL TENSION, SHEAR OR MOMENT

For anchor rod diameters not greater than 1¼ in., angles bolted or welded to the column as shown in Figure 14-7(a) are generally adequate to transfer uplift forces resulting from axial loads and moments. When greater resistance is required, stiffeners may be used with horizontal plates or angles as illustrated in Figure 14-7(b). These stiffeners are not usually considered to be part of the column area in bearing on the base plate. The angles preferably should be set back from the column end about ⅛ in. Stiffeners preferably should be set back about 1 in. from the base plate to eliminate a pocket that might prevent drainage and, thus, protect the column and column base plate from corrosion.

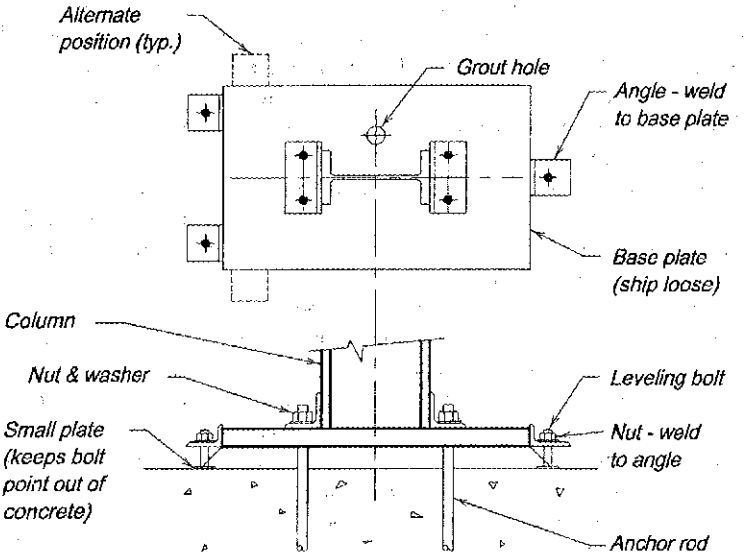

Fig. 14-5. Three-point leveling.

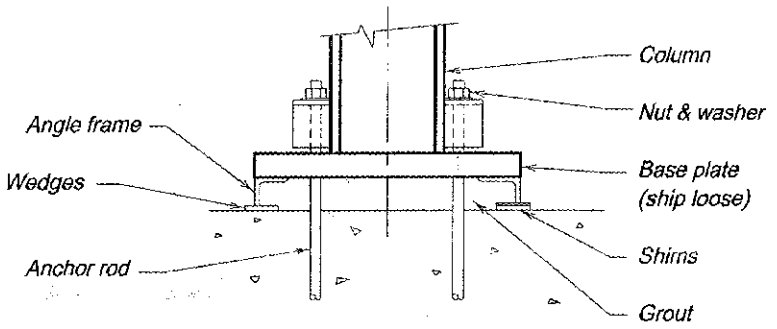

Fig. 14-6. Angle-frame leveling.

For further information, see AISC Design Guide 1, *Base Plate and Anchor Rod Design* (Fisher and Kloiber, 2006).

ANCHOR RODS

Cast-in-place anchor rods, illustrated in Figure 14-8, are generally made from unheaded rod material or headed bolt material. Drilled-in (post-set) anchors can be used for corrective work or in new work as determined by the owner's designated representative for design and as permitted in the applicable building code. The design of post-set anchors is governed by manufacturers' specifications; see also ACI 349 Appendix B (ACI, 2006). Post-set anchors that rely upon torque or tension to develop anchorage by wedging action should not be used

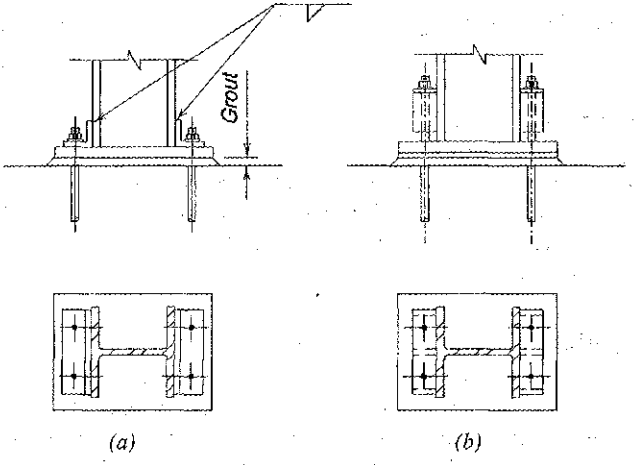

Fig. 14-7. Typical column bases for uplift.

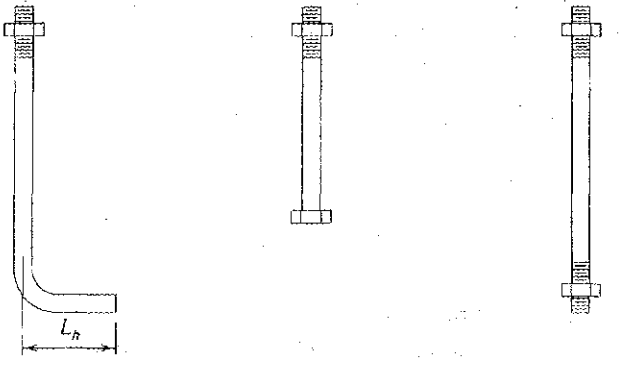

Fig. 14-8. Cast-in-place anchor rods.

unless the stability of the column during erection is provided by means other than the post-set anchors.

Minimum Edge Distance and Embedment Length

In general, minimum edge distances, embedment lengths, and the design of anchorages into concrete are covered by ACI 318 (ACI, 2008). These provisions include methods to account for edge distance and group action, as does ACI 349. AISC Design Guides 1, 7 and 10 provide additional material on the design of anchor rods in concrete (Fisher and Kloiber, 2006; Fisher, 2004; Fisher and West, 1997).

In addition to providing the recommended minimum embedment length, anchor rods must extend a distance above the foundation that is sufficient to permit adequate thread engagement of the nut. Adequate thread engagement for anchor rods is identical to the condition described in the RCSC *Specification* as adequate for steel-to-steel structural joints using high-strength bolts: having the end of the (anchor rod) flush with or outside the face of the nut.

Washer Requirements

Because base plates typically have holes larger than oversized holes to allow for tolerances on the location of the anchor rod, washers are usually furnished from ASTM A36 steel plate. They may be round, square or rectangular, and generally have holes that are $^1/_{16}$ in. larger than the anchor rod diameter. The thickness must be suitable for the forces to be transferred. Minimum washer sizes are given in Table 14-2.

Hooked Anchor Rods

Hooked anchor rods should be used only for axially loaded members subject to compression only to locate and prevent the displacement or overturning of columns due to erection loads or accidental collisions during erection. Additionally, high-strength steels are not recommended for use in hooked rods since bending with heat may materially affect their strength.

Headed or Threaded and Nutted Anchor Rods

When anchor rods are required for a calculated tensile force, T, a more positive anchorage is formed when headed anchor rods, illustrated in Figure 14-8(b), are used. With adequate embedment and edge distance, the limit state is either a tensile failure of the anchor rod or the pull-out of a cone of concrete radiating outward from the head (Marsh and Burdette, 1985a, 1985b) as illustrated in Figure 14-9. Marsh and Burdette (1985a, 1985b) showed that the head of the anchor rod usually provides sufficient anchorage and the use of an additional washer or plate does not add significantly to the anchorage. The nut and threading shown in Figure 14-8(c) is acceptable in lieu of a bolt head. The nut should be welded to the rod to prevent the rod from turning out when the top nut is tightened.

Anchor Rod Nut Installation

The majority of anchorage applications in buildings do not require special anchor rod nut installation procedures or pretension in the anchor rod. The anchor rod nuts should be "drawn down tight" as columns and bases are erected, per ANSI/ASSE A10.13 Section 9.6 (ASSE, 2001). This condition can be achieved by following the same practices as recommended for

snug-tightened installation in steel-to-steel bolted joints in the RCSC *Specification.* Snug-tight is the condition that exists when all plies in a connection have been pulled into firm contact by the bolts in the joint and all the bolts in the joint have been tightened sufficiently to prevent the removal of the nuts without the use of a wrench.

When, in the judgment of the owner's designated representative for design, the performance of the structure will be compromised by excessive elongation of the anchor rods under tensile loads, pretension may be required. Some examples of applications that may require pretension include structures that cantilever from concrete foundations, moment-resisting column bases with significant tensile forces in the anchor rods, or where load reversal might result in the progressive loosening of the nuts on the anchor rods.

When pretensioning of anchor rods is specified, care must be taken in the design of the column base and the embedment of the anchor rod. The shaft of the anchor rod must be free of bond to the encasing concrete so that the rod is free to elongate as it is pretensioned. Also, loss of pretension due to creep in the concrete must be taken into account. Although the design of pretensioned anchorage devices is beyond the scope of this Manual, it should be noted that pretension should not be specified for anchorage devices that have not been properly designed and configured to be pretensioned.

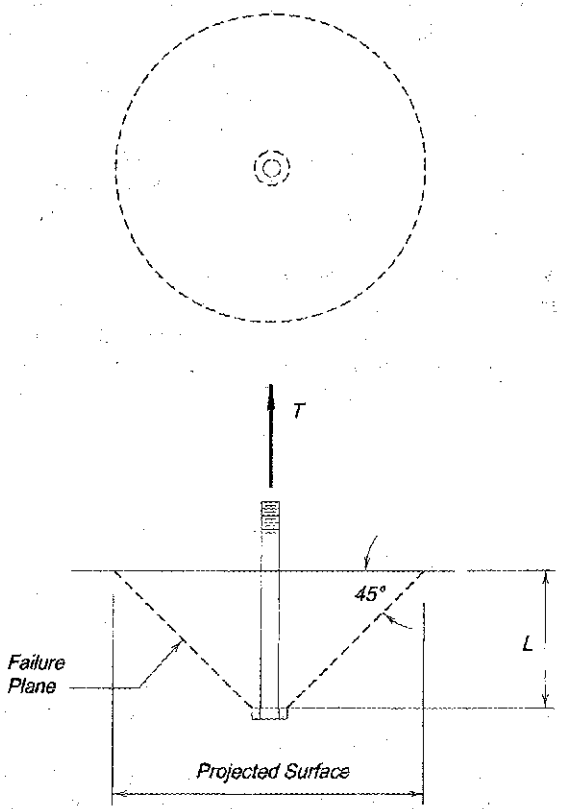

Fig. 14-9. Concrete cone subject to pull-out.

COLUMN SPLICES

When the height of a building exceeds the available length of column sections, or when it is economically advantageous to change the column size at a given floor level, it becomes necessary to splice two columns together. Column splices at the final exterior and interior perimeter and at interior openings must be located a minimum of 48 in. above the finished floor to accommodate the attachment of safety cables, except when constructability does not allow. For simplicity and uniformity, other column splices should be located at the same height. Note that column splices placed significantly higher than this are impractical in terms of field assembly.

Fit-Up of Column Splices

From AISC *Specification* Section M2.6, the ends of columns in a column splice which depend upon contact bearing for the transfer of axial forces must be finished to a common plane by milling, sawing, or other suitable means. In theory, if this were done and the pieces were erected truly plumb, there would be full-contact bearing across the entire surface; this is true in most cases. However, AISC *Specification* Section M4.4 recognizes that a perfect fit on the entire available surface will not exist in all cases.

A $^1/_{16}$-in. gap is permissible with no requirements for repair or shimming. During erection, at the time of tightening the bolts or depositing the welds, columns will usually be subjected to loads which are significantly less than the design loads. Full-scale tests (Popov and Stephen, 1977) which progressed to column failure have demonstrated that subsequent loading to the design loads does not result in distress in the bolts or welds of the splice.

If the gap exceeds $^1/_{16}$ in. but is equal to or less than $^1/_4$ in., and if an engineering investigation shows that sufficient contact area does not exist, nontapered steel shims are required. Mild steel shims are acceptable regardless of the steel grade of the column or bearing material. If required, these shims must be contained, usually with a tack weld, so that they cannot be worked out of the joint.

There is no provision in the AISC *Specification* for gaps larger than $^1/_4$ in. When such a gap exists, an engineering evaluation should be made of this condition based upon the type of loading transferred by the column splice. Tightly driven tapered shims may be required or the required strength may be developed through flange and web splice plates. Alternatively, the gap may be ground or gouged to a suitable profile and filled with weld metal.

Lifting Devices

As illustrated in Figure 14-10, lifting devices are typically used to facilitate the handling and erection of columns. When flange-plated or web-plated column splices are used for W-shape columns, it is convenient to place lifting holes in these flange plates as illustrated in Figure 14-10(a). When butt-plated column splices are used, additional temporary plates with lifting holes may be required as illustrated in Figure 14-10(b). W-shape column splices which do not utilize web-plated or butt-plated column splices (i.e., groove-welded column splices) may be provided with a lifting hole in the column web as illustrated in Figure 14-10(c). While a hole in the column web reduces the cross-sectional area of the column, this reduction will seldom be critical since the column is sized for the loads at the floor below and the splice is located above the floor. Alternatively, auxiliary plates with lifting holes may be connected to the column so that they do not interfere with the welding. Typical column splices for tubes and box-columns are illustrated in Figure 14-10(d). Holes in lifting devices

may be drilled, reamed or flame-cut with a mechanically guided torch. In the latter case, the bearing surface of the hole in the direction of the lift must be smooth.

The lifting device and its attachment to the column must be of sufficient strength to support the weight of the column as it is brought from the horizontal position (as delivered) to the vertical position (as erected); the lifting device and its attachment to the column must be adequate for the tensile forces, shear forces and moments induced during handling and erection.

A suitable shackle and pin are connected to the lifting device while the column is on the ground. The steel erector usually establishes the size and type of shackle and pin to be used in erection and this information must be transmitted to the fabricator prior to detailing. Except for excessively heavy lifting pieces, it is customary to select a single pin and pinhole diameter to accommodate the majority of structural steel members, whether they are columns or other heavy structural steel members. The pin is attached to the lifting

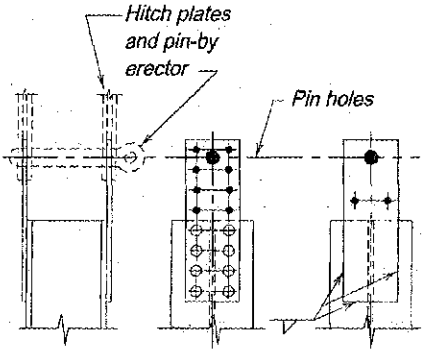

(a) W-shape columns, flange-plated column splices with lifting holes

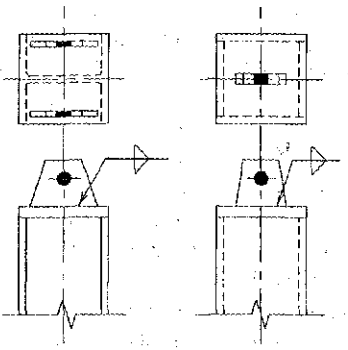

(b) W-shape and box-shaped columns butt-plated column splices with auxiliary lifting plates

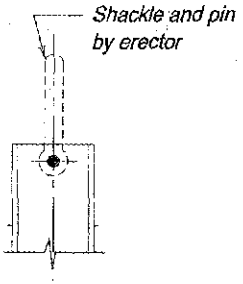

(c) W-shape columns, no splice plates, lifting hole in column web

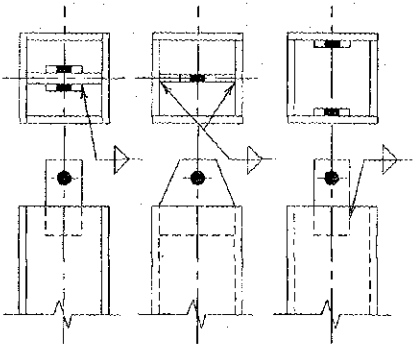

(d) Tubular and box-shape columns, auxiliary lifting plates

Fig. 14-10. Lifting devices for columns.

hook and a lanyard trails to the ground or floor level. After the column is erected and connected, the pin is removed from the device by means of the lanyard, eliminating the need for an ironworker to climb the column. The shackle pin, as assembled with the column, must be free and clear, so that it may be withdrawn laterally after the column has been landed and stabilized.

The safety of the structure, equipment and personnel is of utmost importance during the erection period. It is recommended that all welds that are used on the lifting devices and stability devices be inspected very carefully, both in the shop and later in the field, for any damage that may have occurred in handling and shipping. Groove welds frequently are inspected with ultrasonic methods (UT) and fillet welds are inspected with magnetic particle (MT) or liquid dye penetrant (PT) methods.

Column Alignment and Stability During Erection

Column splices should provide for safety and stability during erection when the columns might be subjected to wind, construction, and/or accidental loading prior to the placing of the floor system. The nominal flange-plated, web-plated, and butt-plated column splices developed here consider this type of loading.

In other splices, column alignment and stability during erection are achieved by the addition of temporary lugs for field bolting as illustrated in Figure 14-11. The material thickness, weld size, and bolt diameter required are a function of the loading. A conservative resisting moment arm is normally taken as the distance from the compressive toe or flange face to the gage line of the temporary lug. The overturning moment should be checked about both axes of the column. The recommended minimum plate or angle thickness is $^1/_2$ in.; the recommended minimum weld size is $^5/_{16}$ in.; additionally, high-strength bolts are normally used as stability devices.

Temporary lugs are not normally used as lifting devices. Unless required to be removed in the contract documents, these temporary lugs may remain.

Column alignment is provided with centerpunch marks that are useful in centering the columns in two directions.

Force Transfer in Column Splices

As illustrated in Figure 14-12, for the W-shapes most frequently used as columns, the distance between the inner faces of the flanges is constant throughout any given nominal depth group; as the nominal weight per foot increases for each nominal depth, the flange and web thicknesses increase. From AISC *Specification* Section J7, the available bearing strength, ϕR_n *or* R_n/Ω, of the contact area of a finished surface is determined with

$$R_n = 1.8 F_y A_{pb} \tag{14-8}$$

$$\phi = 0.75 \qquad \Omega = 2.00$$

where

A_{pb} = projected bearing area, in.^{2}

F_y = specified mimimum yield stress of the column, ksi

This bearing strength is much greater than the axial strength of the column and will seldom prove critical in the member design. For column splices transferring only axial forces, complete axial force transfer may be achieved through bearing on finished surfaces; bolts or

welds are required by AISC *Specification* Section J1.4 to be sufficient to hold all parts securely in place.

In addition to axial forces, from AISC *Specification* Section J1.4, column splices must be proportioned to achieve the required strength in tension, due to the combination of dead load and lateral loads. Note that it is not permissible to use forces due to live load to offset the tensile forces from wind or seismic loads. Additional column splice requirements are provided in the AISC *Seismic Provisions*.

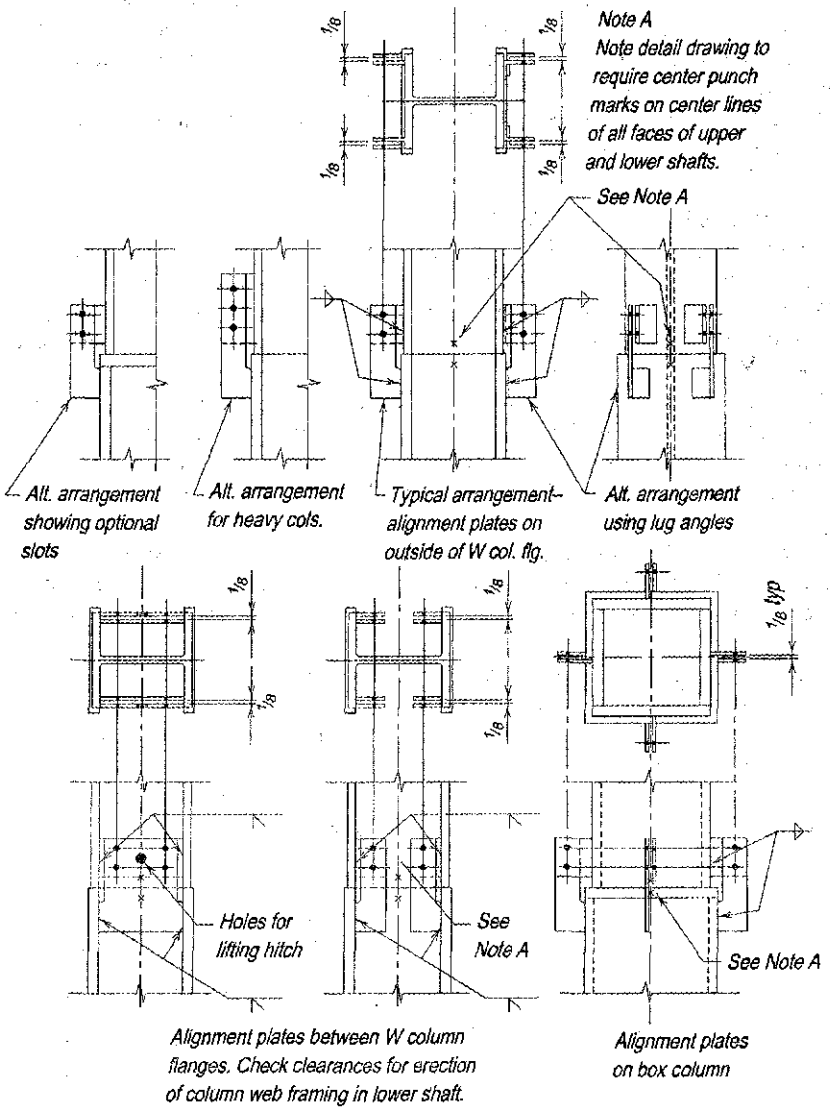

Fig. 14-11. Column stability and alignment devices.

For dead and wind loads, if the required strength due to the effect of the dead load is greater than the required strength due to the wind load, the splice is not subjected to tension and a nominal splice may be selected from those in Table 14-3. When the required strength due to dead load is less than the required strength due to the wind load, the splice will be subjected to tension and the nominal splices from Table 14-3 are acceptable if the available tensile strength of the splice is greater than or equal to the required strength. Otherwise, a splice must be designed with sufficient area and attachment.

When shear from lateral loads is divided among several columns, the force on any single column is relatively small and can usually be resisted by friction on the contact bearing surfaces and/or by the flange plates, web plates or butt plates. If the required shear strength exceeds the available shear strength of the column splice selected from Table 14-3, a column splice must be designed with sufficient area and attachment.

The column splices shown in Table 14-3 meet the OSHA requirement for 300 lb located 18 in. from the column face.

Flange-Plated Column Splices

Table 14-3 gives typical flange-plated column splice details for W-shape columns. These details are not splice requirements, but rather, typical column splices in accordance with AISC *Specification* provisions and typical erection requirements. Other splice designs may also be developed. It is assumed in all cases that the lower shaft will be the heavier, although not necessarily the deeper, section.

Full-contact bearing is always achieved when lighter sections are centered over heavier sections of the same nominal depth group. If the upper column is not centered on the lower column, or if columns of different nominal depths must bear on each other, some areas of the upper column will not be in contact with the lower column. These areas are hatched in Figure 14-13.

When additional bearing area is not required, unfinished fillers may be used. These fillers are intended for "pack-out" of thickness and are usually set back 1/4 in. or more from the finished column end. Since no force is transferred by these fillers, only nominal attachment to the column is required.

When additional bearing area is required, fillers finished to bear on the larger column may be provided. Such fillers are proportioned to carry bearing loads at the bearing strength calculated from AISC *Specification* Section J7 and must be connected to the column to transfer this calculated force.

In Table 14-3, Cases I and II are for all-bolted flange-plated column splices for W-shape columns. Bolts in column splices are usually the same size and type as for other bolts on the

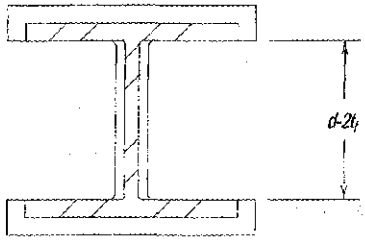

Column Size	$d-2t_f$ (in.)
W8×24–67	7.13
W10×33–112	8.86
W12×40–336	10.9
W14×43–808	12.6

Fig. 14-12. Distance between flanges for typical W-shape columns.

column. Bolt spacing, end distance and edge distances resulting from the plate sizes shown permit the use of 3/4-in.- and 7/8-in.-diameter bolts in the splice details shown. Larger diameter bolts may require an increase in edge or end distances. Refer to AISC *Specification* Chapter J. The use of high-strength bolts in bearing-type connections is assumed in all field and shop splices. However, when slotted or oversized holes are utilized, or in splices employing undeveloped fillers over 1/4 in. thick, slip-critical connections may be required; refer to AISC *Specification* Section J5.2. For ease of erection, field clearances for lap splices fastened by bolts range from 1/8 in. to 3/16 in. under each plate.

Cases IV and V are for all-welded flange-plated column splices for W-shape columns. Splice welds are assumed to be made with E70XX electrodes and are proportioned as required by the AISC *Specification* provisions. The GMAW and FCAW equivalents to E70XX electrodes may be substituted if desired. Field clearance for welded splices are limited to 1/16 in. to control the expense of building up welds to close openings. Note that the fillet weld lengths, *Y*, as compared to the lengths *L*/2, provide 2-in. unwelded distance below and above the column shaft finish line. This provides a degree of flexibility in the splice plates to assist the erector.

Cases VI and VII apply to combination bolted and welded column splices. Since the available strength of the welds will, in most cases, exceed the strength of the bolts, the weld and splice lengths shown may be reduced, if desired, to balance the strength of the fasteners to the upper or lower column, provided that the available strength of the splice is still greater than the required strength of the splice, including erection loading.

Directly Welded Flange Column Splices

Table 14-3 also includes typical directly welded flange column splice details for W-shape and HSS or box-shaped columns. These details are not splice requirements, but rather, typical column splices in accordance with AISC *Specification* provisions and typical erection requirements. Other splice designs may also be developed. It is assumed in all cases that the lower shaft will be the heavier, although not necessarily the deeper, section.

Case VIII applies to W-shape columns spliced with either partial-joint-penetration or complete-joint-penetration groove welds. Case X applies to HSS or box-shaped columns spliced with partial-joint-penetration or complete-joint-penetration groove welds.

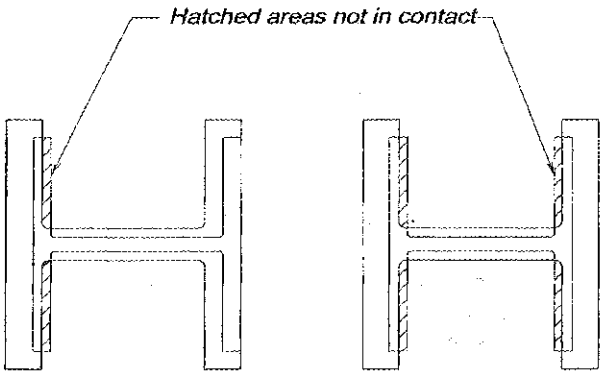

Fig. 14-13. Columns not centered or of different nominal depth.

Butt-Plated Column Splices

Table 14-3 further includes typical butt-plated column splice details for W-shape and HSS or box-shaped columns. These details are not splice requirements, but rather, present typical column splices in accordance with AISC *Specification* provisions and typical erection requirements. Other splice designs may also be developed. It is assumed in all cases that the lower shaft will be the heavier, although not necessarily the deeper, section.

Butt plates are used frequently on welded splices where the upper and lower columns are of different nominal depths, but may not be economical for bolted splices since fillers cannot be eliminated. Typical butt plates are 1½ in. thick for a W8 over W10 splice, and 2 in. thick for other W-shape combinations such as W10 over W12 and W12 over W14. Butt plates which are subjected to substantial bending stresses, such as required on boxed columns, will require a more careful review and analysis. One common method is to assume forces are transferred through the butt plate on a 45° angle and check the thickness obtained for shear and bearing strength. Finishing requirements for butt plates are specified in AISC *Specification* Section M2.8.

Case III is a combination flange-plated and butt-plated column splice for W-shape columns. Case IX applies to welded butt-plated column splices for W-shape columns. Case XI applies to welded butt-plated column splices for HSS or box-shaped columns. Case XII applies to welded butt-plated column splices between W-shape and HSS or box-shaped columns.

DESIGN CONSIDERATIONS FOR HSS CAP PLATES

The simplest form of attachment to an HSS is to connect the framing member to the top of an HSS. The cap plate serves as a bearing device to transfer the reactions from the framing member into the HSS. The cap plate may also be used to transfer moment into the HSS column. The moment transfer is through a force couple that consists of both compressive and tensile reactions delivered to the cap plate.

Flexural Strength of the Cap Plate

The available strength of the cap plate, in terms of reaction resistance, is determined as ϕR_n or R_n/Ω with

$$R_n = \frac{Bt_l^2}{4\left(\frac{l_{br}}{2} + a - \frac{H}{2}\right)} F_{yc} \qquad (14\text{-}9)$$

$$\phi = 0.90 \qquad \Omega = 1.67$$

where

B = HSS width, in.
F_{yc} = specified minimum yield stress of the cap plate, ksi
H = HSS depth, in.
a = distance from the HSS centroid to the end of the attached member, in.
l_{br} = required bearing length for the attached member, in.
t_l = cap plate thickness, in.

This equation applies only if the cap plate is subjected to cantilever bending, as shown in Figure 14-14. This occurs when the beam or joist reaction point is outside of the HSS face. If a stiffener is used in the beam and is positioned over the HSS wall, then the equation does not apply, since the cap plate is not subjected to bending. Also if the denominator of the equation results in a negative number, bending of the cap plate can be disregarded.

Compression Yielding and Crippling of the HSS Wall

The available strength of the HSS wall due to compression yielding and compression crippling is determined in accordance with AISC *Specification* Section K1.

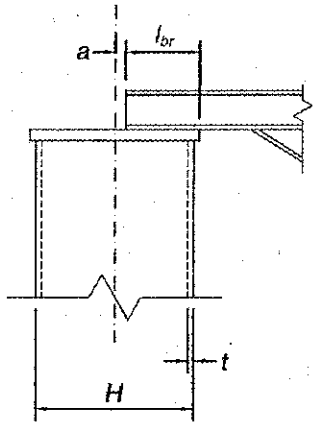

Fig. 14-14. Cap plate subject to cantilever bending.

PART 14 REFERENCES

ACI (2006), *Code Requirements for Nuclear Safety Related Concrete Structures*, ACI 349-06, American Concrete Institute, Farmington Hills, MI.

ACI (2008), *Building Code Requirements for Structural Concrete*, ACI 318-08 and ACI 318M-08, American Concrete Institute, Farmington Hills, MI.

ASSE (2001), *Safety Requirements for Steel Erection*, ANSI/ASSE 10.13-01, American Society of Safety Engineers, Des Plaines, IL.

Fisher, J.M. (2004), *Industrial Buildings—Roofs to Anchor Rods*, Design Guide 7, 2nd Ed., AISC, Chicago, IL.

Fisher, J.M. and Kloiber, L.A. (2006), *Base Plate and Anchor Rod Design*, 2nd Ed., Design Guide 1, AISC, Chicago, IL.

Fisher, J.M. and West, M.A. (1997), *Erection Bracing of Low-Rise Structural Steel Frames*, Design Guide 10, AISC, Chicago, IL.

Marsh, M.L. and Burdette, E.G. (1985a), "Anchorage of Steel Building Components to Concrete," *Engineering Journal*, Vol. 15, No. 4, 4th Quarter, pp. 33–39, AISC, Chicago, IL.

Marsh, M.L. and Burdette, E.G. (1985b), "Multiple Bolt Anchorages: Method for Determining the Effective Projected Area of Overlapping Stress Cones," *Engineering Journal*, Vol. 15, No. 4, 4th Quarter, pp. 29–32, AISC, Chicago, IL.

Popov, E.P. and Stephen, R.M. (1977), "Capacity of Columns with Splice Imperfections," *Engineering Journal*, Vol. 14, No. 1, 1st Quarter, pp. 16–23, AISC Chicago, IL.

Ricker, D.T. (1989), "Some Practical Aspects of Column Base Selection," *Engineering Journal*, Vol. 26, No. 3, 3rd Quarter, AISC, Chicago, IL.

Thornton, W.A. (1990a), "Design of Small Base Plates for Wide-Flange Columns," *Engineering Journal*, Vol. 27, No. 3, 3rd Quarter, pp. 108–110, AISC, Chicago, IL.

Thornton, W.A. (1990b), "Design of Small Base Plates for Wide-Flange Columns—A Concatenation of Methods," *Engineering Journal*, Vol. 27, No. 4, 4th Quarter, pp. 173–174, AISC, Chicago, IL.

Table 14-1
Finish Allowances

Size	Thickness, in.	Add to Finish One Side, in.	Add to Finish Two Sides, in.
Maximum dimension 24 in. or less	$1\frac{1}{4}$ or less	$\frac{1}{16}$	$\frac{1}{8}$
	over $1\frac{1}{4}$ to 2, incl.	$\frac{1}{8}$	$\frac{1}{4}$
Maximum dimension over 24 in.	$1\frac{1}{4}$ or less	$\frac{1}{8}$	$\frac{1}{4}$
	over $1\frac{1}{4}$ to 2, incl.	$\frac{3}{16}$	$\frac{3}{8}$
56 in. wide or less	over 2 to $7\frac{1}{2}$, incl.	$\frac{1}{4}$	$\frac{3}{8}$
	over $7\frac{1}{2}$ to 10, incl.	$\frac{1}{2}$	$\frac{5}{8}$
	over 10 to 15, incl.	$\frac{3}{4}$	$\frac{7}{8}$
Over 56 in. wide to 72 in. wide	over 2 to 6, incl.	$\frac{1}{4}$	$\frac{3}{8}$
	over 6 to 10, incl.	$\frac{1}{2}$	$\frac{5}{8}$
	over 10 to 15, incl.	$\frac{3}{4}$	$\frac{7}{8}$

Note: These allowances apply for material with $F_u \leq 60$ ksi.

Table 14-2
Recommended Maximum Sizes for Anchor-Rod Holes in Base Plates

Anchor Rod Diameter, in.	Max. Hole Diameter, in.	Min. Washer Size, in.	Min. Washer Thickness	Anchor Rod Diameter, in.	Hole Diameter, in.	Min. Washer Size, in.	Min. Washer Thickness
$\frac{3}{4}$	$1\frac{5}{16}$	2	$\frac{1}{4}$	$1\frac{1}{2}$	$2\frac{5}{16}$	$3\frac{1}{2}$	$\frac{1}{2}$
$\frac{7}{8}$	$1\frac{9}{16}$	$2\frac{1}{2}$	$\frac{5}{16}$	$1\frac{3}{4}$	$2\frac{3}{4}$	4	$\frac{5}{8}$
1	$1\frac{13}{16}$	3	$\frac{3}{8}$	2	$3\frac{1}{4}$	6	$\frac{3}{4}$
$1\frac{1}{4}$	$2\frac{1}{16}$	3	$\frac{1}{2}$	$2\frac{1}{2}$	$3\frac{3}{4}$	$5\frac{1}{2}$	$\frac{7}{8}$

Notes:
1. Circular or square washers meeting the washer size are acceptible.
2. Clearance must be considered when choosing an appropriate anchor rod hole location, noting effects such as the position of the rod in the hole with respect to the column, weld size and other interferences.
3. When base plates are less than $1\frac{1}{4}$ in. thick, punching of holes may be an economical option. In this case, $\frac{3}{4}$-in. anchor rods and $1\frac{1}{16}$-in.-diameter punched holes may be used with ASTM F844 (USS Standard) washers in place of fabricated plate washers.

Table 14-3
Typical Column Splices
Case I:
All-bolted flange-plated column splices between columns with depth d_u and d_l nominally the same.

Column Size	Gage g_u or g_l	Flange Plates			
		Type	Width	Thk.	Length
W14×455 to 730	13½	1	16	¾	1′ 6½
257 to 426	11½	1	14	⅝	1′ 6½
145 to 233	11½	1	14	½	1′ 6½
90 to 132	11½	2	14	⅜	1′ 0½
43 to 82	5½	2	8	⅜	1′ 0½
W12×120 to 336	5½	2	8	⅝	1′ 0½
40 to 106	5½	2	8	⅜	1′ 0½
W10×33 to 112	5½	2	8	⅜	1′ 0½
W8×31 to 67	5½	2	8	⅜	1′ 0½
24 & 28	3½	2	6	⅜	1′ 0½

Gages shown may be modified if necessary to accommodate fittings elsewhere on the column.

Case I-A: $d_l = (d_u + 1/4$ in.) to $(d_u + 5/8$ in.)	Flange plates: Select g_u for upper column; select g_l and flange plate dimensions for lower columns (see table above). Fillers: None. Shims: Furnish sufficient strip shims 2½×⅛ to provide 0 to 1/16-in. clearance each side.
Case I-B: $d_l = (d_u - 1/4$ in.) to $(d_u + 1/8$ in.)	Flange plates: Same as Case I-A. Fillers (shop bolted under flange plates): Select thickness as ⅛-in. for $d_l = d_u$ and $d_l = (d_u + 1/8$ in.) or as ¼-in. for $d_l = (d_u - 1/8$ in.) and $d_l = (d_u - 1/4$ in.) Select width to match flange plate and length as 0′ 9 for Type 1 or 0′ 6 for Type 2. Shims: Same as Case I-A.
Case I-C: $d_l = (d_u + 3/4$ in.) and over.	Flange plates: Same as Case I-A. Fillers (shop bolted to upper column): Select thickness as $(d_l - d_u)$ / 2 minus ⅛ in. or 3/16 in., whichever results in ⅛-in. multiples of filler thickness. Select width to match flange plate, but not greater than upper column flange width. Select length as 1′ 0 for Type 1 or 0′ 9 for Type 2. Shims: Same as Case I-A.

For lifting devices, see Figure 14-10.

Table 14-3 (continued)
Typical Column Splices
Case I:
All-bolted flange-plated column splices between columns with depth d_u and d_l nominally the same.

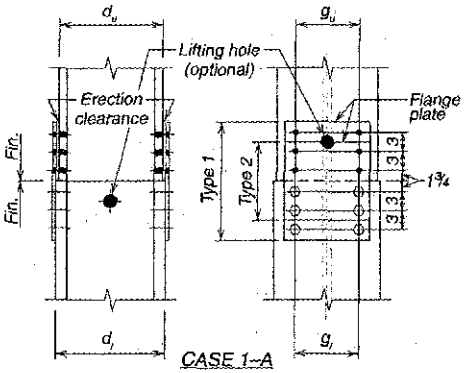

CASE 1–A

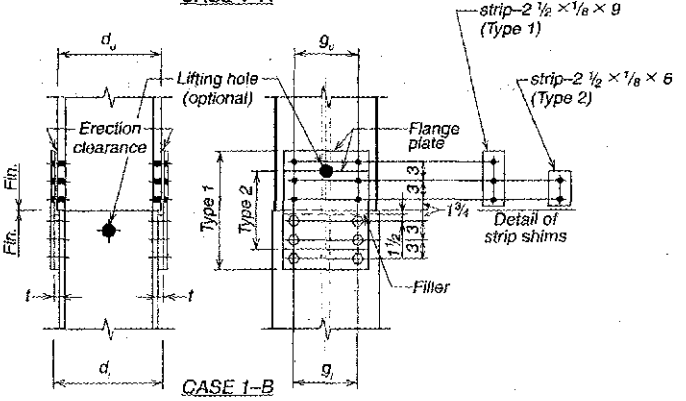

CASE 1–B

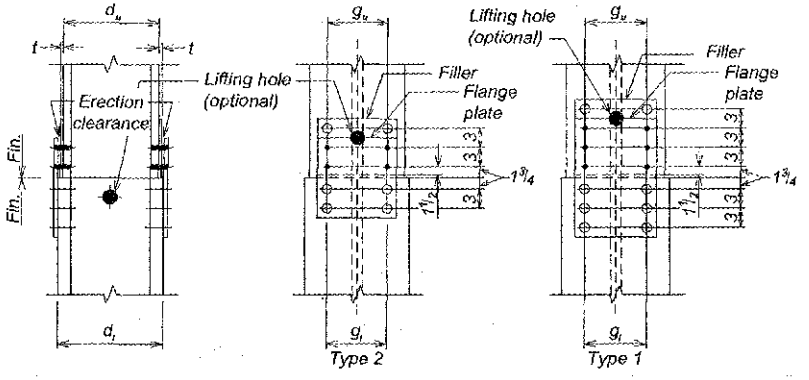

CASE 1-C

Table 14-3 (continued)
Typical Column Splices
Case II:
All-bolted flange-plated column splices between columns with depth d_u nominally 2 in. less than depth d_l.

Fillers on upper column developed for bearing on lower column.

Flange plates: Same as Case I-A.

Fillers (shop bolted to upper column): Select thickness as $(d_l - d_u) / 2$ minus 1/8-in. or 3/16-in., whichever results in 1/8-in. multiples of filler thickness. Select bolts through fillers (including bolts through flange plates) on each side to develop bearing strength of the filler. Select width to match flange plate, but not greater than upper column flange width unless required for bearing strength. Select length as required to accommodate required number of bolts.

Shims: Same as Case I-A.

Table 14-3 (continued)
Typical Column Splices
Case III:
All-bolted flange-plated and butt-plated column splices between columns with depth d_u nominally 2 in. less than depth d_l.

Fillers on upper column developed for bearing on lower column.

Column Size	Gage g_u or g_l	Flange Plates			
		Type	Width	Thk.	Length
W14×455 to 730	13½	1	16	¾	1′ 8½
257 to 426	11½	1	14	⅝	1′ 8½
145 to 233	11½	1	14	½	1′ 8½
90 to 132	11½	2	14	⅜	1′ 2½
43 to 82	5½	2	8	⅜	1′ 2½
W12×120 to 336	5½	2	8	⅝	1′ 2½
40 to 106	5½	2	8	⅜	1′ 2½
W10×33 to 112	5½	2	8	⅜	1′ 2½
W8×31 to 67	5½	2	8	⅜	1′ 2
24 & 28	3½	2	8	⅜	1′ 2

Gages shown may be modified if necessary to accommodate fittings elsewhere on the column.

Flange plates: Select g_u for upper column, select g_l and flange plate dimensions for lower column (see table above).

Fillers (shop bolted to upper column): Same as Case I-C.

Shims: Same as Case I-A.

Butt plate: Select thickness as 1½-in. for W8 upper column or two inches for others. Select width the same as upper column and length as $d_l - 1/4$ in.

For lifting devices, see Figure 14-10.

Table 14-3 (continued)
Typical Column Splices
Case II and III:
All-bolted flange-plated column splices between columns with depth d_u nominally 2 in. less than depth d_l.

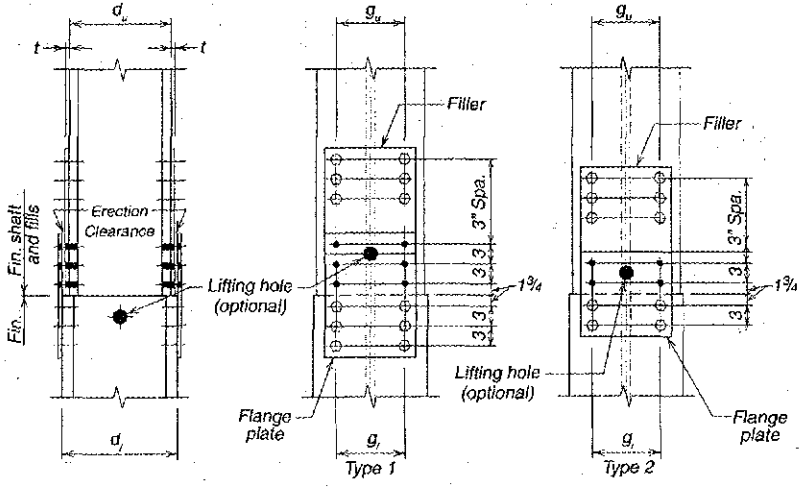

CASE II

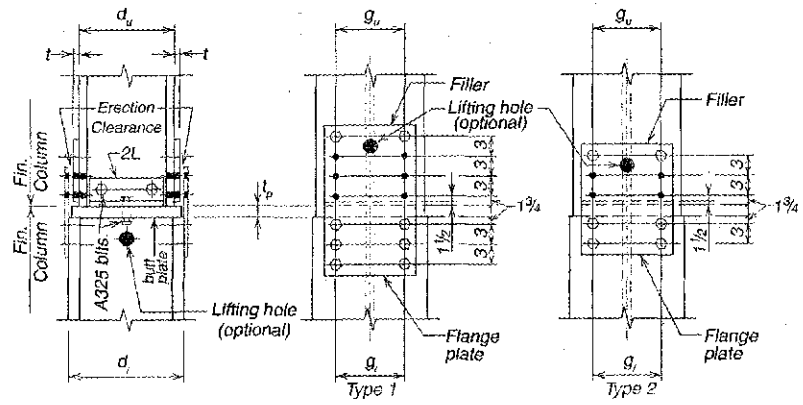

CASE III

Table 14-3 (continued)
Typical Column Splices
Case IV:
All-welded flange-plated column splices between columns with depths d_u and d_l nominally the same.

Column Size	Flange Plate			Welds			Minimum Space for Welding	
					Length			
	Width	Thk.	Length L	Size A	X	Y	M	N
W14×455 & over	14	5/8	1'-6	1/2	5	7	13/16	11/16
311 to 426	12	5/8	1'-4	1/2	4	6	13/16	11/16
211 to 283	12	1/2	1'-4	3/8	4	6	11/16	9/16
90 to 193	12	3/8	1'-4	5/16	4	6	5/8	1/2
61 to 82	8	3/8	1'-4	5/16	3	6	5/8	1/2
43 to 53	6	5/16	1'-2	1/4	2	5	9/16	7/16
W12×120 to 336	8	1/2	1'-4	3/8	3	6	11/16	9/16
53 to 106	8	3/8	1'-4	5/16	3	6	5/8	1/2
40 to 50	6	5/16	1'-2	1/4	2	5	9/16	7/16
W10×49 to 112	8	3/8	1'-4	5/16	3	6	5/8	1/2
33 to 45	6	5/16	1'-2	1/4	2	5	9/16	7/16
W8×31 to 67	6	3/8	1'-2	5/16	2	5	5/8	1/2
24 & 28	5	5/16	1'-0	1/4	2	4	9/16	7/16

Case IV-A: $d_l = (d_u + 1/8)$	Flange plates: Select flange-plate width and length and weld lengths for upper (lighter) column; select flange-plate thickness and weld size for lower (heavier) column. Fillers: None.
Case IV-B: $d_l = (d_u - 1/4$ in.) to d_u	Flange plates: Same as Case IV-A, except use weld size $A + t$ on lower column. Fillers (undeveloped on lower column, shop welded under flange plates): Select thickness t as $(d_l - d_u) / 2 + 1/16$ in. Select width to match flange plate and length as $L / 2 - 2$ in.
Case IV-C: $d_l = (d_u + 1/4$ in.) to $(d_u + 1/2$ in.)	Flange plates: Same as Case IV-A, except use weld size $A + t$ on upper column. Fillers (undeveloped on upper column, shipped loose): Select thickness t as $(d_l - d_u) / 2 - 1/16$ in. Select width to match flange plate and length as $L / 2 - 2$ in.

For lifting devices, see Figure 14-10.

Table 14-3 (continued)
Typical Column Splices
Case IV:
All-bolted flange-plated column splices between columns with depth d_u nominally 2 in. less than depth d_l.

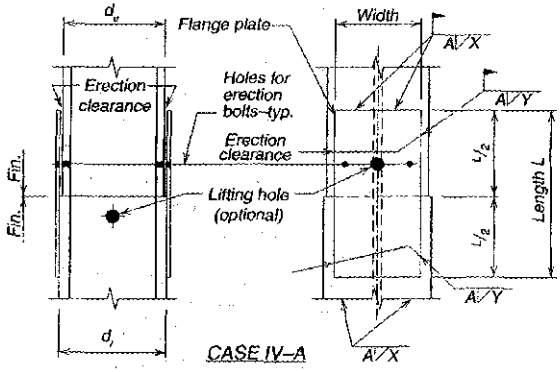

CASE IV–A

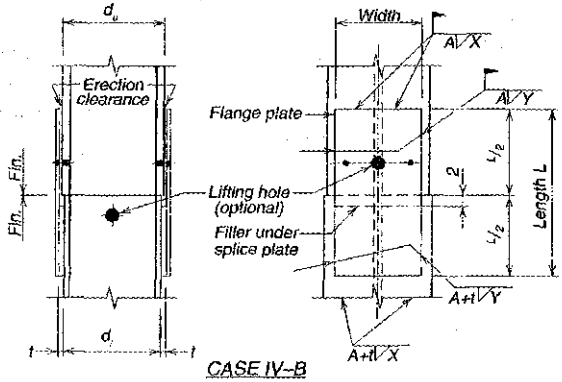

CASE IV–B

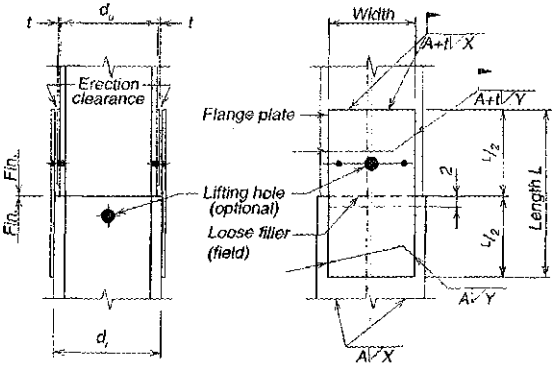

CASE IV–C

Table 14-3 (continued)
Typical Column Splices
Case IV:
All-welded flange-plated column splices between columns with depths d_u and d_l nominally the same.

Case IV-D: $d_l \approx (d_u + \frac{5}{8}$ in.) and over Filler width less than upper column flange width.	Flange plates: Same as Case IV-A, except see Note 1. Fillers (developed on upper column, shop welded to upper column): Select thickness t as $(d_l - d_u) / 2 - \frac{1}{16}$ in. Select weld size B from AISC Specification; $\leq \frac{5}{16}$-in. preferred. Select weld length L_B such that $L_B \geq A(X + Y) / B \geq (L / 2 + 1$ in.). Select filler width greater than flange plate width + $2N$ but less than upper column flange width – $2M$. Select filler length as L_B, subject to Note 2.
Case IV-E: $d_l \approx (d_u + \frac{5}{8}$ in.) and over Filler width greater than upper column flange width. Use this case only when M or N in Case IV-D are inadequate for welds B and A.	Flange plates: Same as Case IV-A, except see Note 1. Fillers (developed on upper column, shop welded to upper column): Select thickness t as $(d_l - d_u) / 2 - \frac{1}{16}$ in. Select weld size B from AISC Specification; $\leq \frac{5}{16}$-in. preferred. Select weld length L_B such that $L_B \geq A(X + Y) / B \geq (L / 2 + 1$ in.). Select filler width as the larger of the flange plate width + $2N$ and the upper column flange width + $2M$, rounded to the next higher $\frac{1}{4}$-in. increment. Select filler length as L_B subject to Note 2.

Table 14-3 (continued)
Typical Column Splices
Case IV:
All-welded flange-plated column splices between columns with depths d_u and d_l nominally the same.

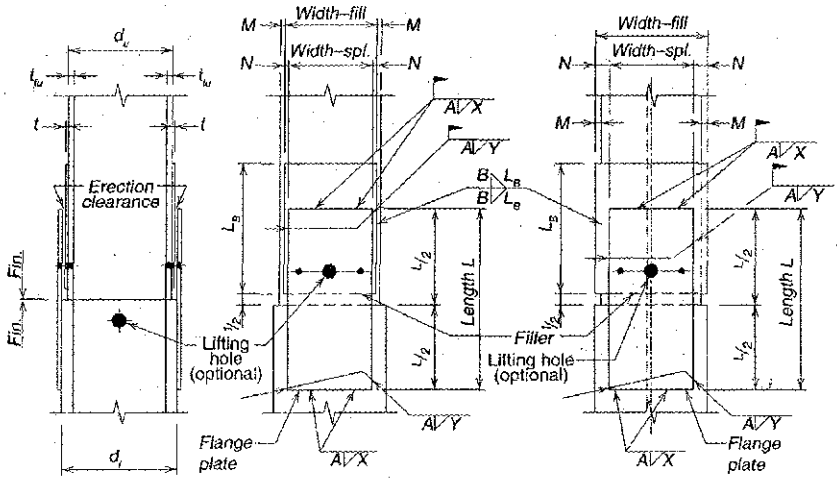

Note 1:
Where welds fasten flange plates to developed fillers, or developed fillers to column flanges (Cases IV-E and V-B), use the table to the right to check minimum fill thickness for balanced fill and weld shear strength. Assume that an E70XX weld with $A = \frac{1}{2}$, $X = 4$, and $Y = 6$ is to be used at full strength on an A36 fill $\frac{1}{4}$-in. thick. Since this table shows that the minimum fill thickness to develop this $\frac{1}{2}$-in. weld is 0.51 in., the $\frac{1}{4}$-in. fill will be overstressed. A balanced condition is obtained by multiplying the length $(X + Y)$ by the ratio of the minimum to the actual thickness of fill, thus:

$$(4 + 6) \times \frac{0.51}{0.25} = 20.4$$

use $(X + Y) = 20\frac{1}{2}$-in.

Placing this additional increment of $(X + Y)$ can be done by making weld lengths X continuous across the end of the splice plate and by increasing Y (and therefore the plate Length) if required.

Weld A E70XX	Minimum Fill Thickness for Balanced Weld and Plate Shear	
	F_y	
	36	50
$\frac{1}{4}$	0.26	0.19
$\frac{5}{16}$	0.32	0.23
$\frac{3}{8}$	0.38	0.28
$\frac{7}{16}$	0.45	0.33
$\frac{1}{2}$	0.51	0.37

Note 2:
If fill length, based on L_B, is excessive, place weld of size B across one or both ends of fill and reduce L_B accordingly, but not to less than $(L/2 + 1)$. Omit return welds in Cases IV-E and V-B.

Table 14-3 (continued)
Typical Column Splices
Case V:
All-welded flange-plated column splices between columns with depth d_u nominally 2 in. less than depth d_l.

Case V-A: Fillers on upper column developed for bearing on lower column. Filler width less than upper column flange width.	Flange plates: Same as Case IV-A, except see Note 1. Fillers (shop welded to upper column): Select thickness as $(d_l - d_u) / 2 - 1/16$ in. Select weld size B from AISC Specification; $\leq 5/16$ in. preferred. Select weld length L_B to develop bearing strength of the filler but not less than $(L / 2 + 1\frac{1}{2}$ in.). Select filler width greater than the flange plate width + $2N$ but less than the upper column flange width – $2M$. See Case IV for M and N.
Case V-B: Same as Case V-A except filler width is greater than upper column flange width. Use this case only when M or N in Case V-A are inadequate for weld A, or when additional filler bearing area is required.	Flange plates: Same as Case IV-A, except see Note 1. Fillers (shop welded to upper column): Select thickness as $(d_l - d_u) / 2 - 1/16$ in. Select weld size B from AISC Specification; $\leq 5/16$ in. preferred. Select weld length L_B to develop bearing strength of the filler but not less than $(L / 2 + 1\frac{1}{2}$ in.). Select filler width as the larger of the flange plate width + $2N$ and the upper column flange width + $2M$, rounded to the next higher $1/4$ in. increment. Filler length as L_B, subject to Note 3.

Note 3:
If fill length, based on L_B, is excessive, place weld of size B across end of fill and reduce L_B by one-half of such additional weld length, but not to less than $(L / 2 + 1\frac{1}{2})$. Omit return welds in Case V-B.

Table 14-3 (continued)
Typical Column Splices
Case V:
All-welded flange-plated column splices between columns with depth d_u nominally 2 in. less than depth d_l.

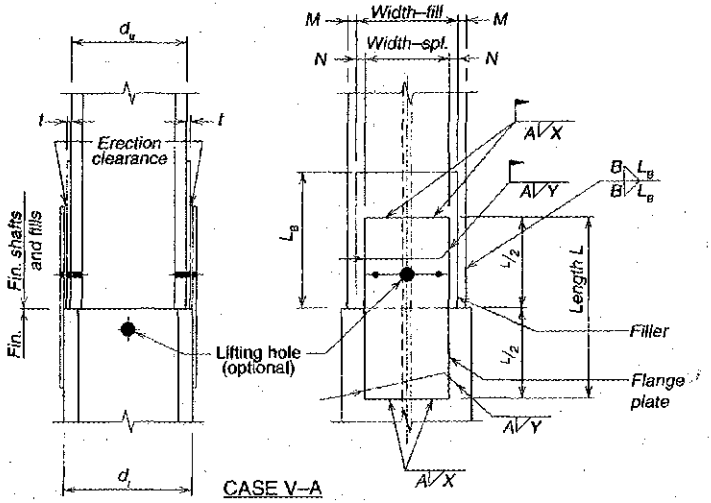

CASE V–A

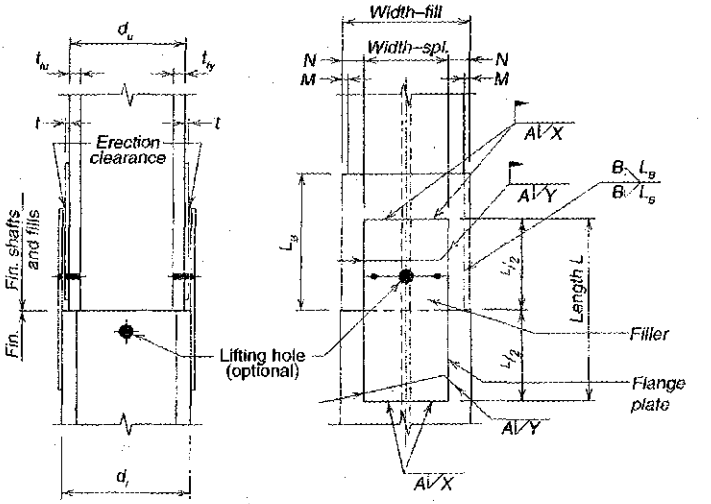

CASE V–B

Table 14-3 (continued)
Typical Column Splices
Case VI:
Combination bolted and welded column splices between columns with depths d_u and d_l nominally the same.

Column Size	Flange Plate				Bolts		Welds		
			Length		No. of Rows	Gage g	Size A	Length	
	Width	Thk.	L_U	L_L				X	Y
W14×455 & over	14	5/8	9 1/4	9	3	11 1/2	1/2	5	7
311 to 426	12	5/8	9 1/4	8	3	9 1/2	1/2	4	6
211 to 283	12	1/2	9 1/4	8	3	9 1/2	3/8	4	6
90 to 193	12	3/8	6 1/4	8	2	9 1/2	5/16	4	6
61 to 82	8	3/8	6 1/4	8	2	5 1/2	5/16	3	6
43 to 53	6	5/16	6 1/4	7	2	3 1/2	1/4	2	5
W12×120 to 336	8	1/2	6 1/4	8	2	5 1/2	3/8	3	6
53 to 106	8	3/8	6 1/4	8	2	5 1/2	5/16	3	6
40 to 50	6	5/16	6 1/4	7	2	3 1/2	1/4	2	5
W10×49 to 112	8	3/8	6 1/4	8	2	5 1/2	5/16	3	6
33 to 45	6	5/16	6 1/4	7	2	3 1/2	1/4	2	5
W8×31 to 67	6	3/8	6 1/4	7	2	3 1/2	5/16	2	5
24 & 28	5	5/16	6 1/4	6	2	3 1/2	1/4	2	4

Gages shown may be modified if necessary to accommodate fittings elsewhere on the columns.

Case VI-A: $d_l = (d_u + 1/4$ in.) to $(d_u + 5/8$ in.)	Flange plates: Select flange plate width, bolts, gage and length L_U for upper column; select flange plate thickness, weld size A, weld lengths X and Y, and length L_L for lower column. Total flange plate length is $L_U + L_L$ (see table above). Fillers: None. Shims: Furnish sufficient strip shims 2 1/2×1/8 to obtain 0 to 1/16-in. clearance on each side.
Case VI-B: $d_l = (d_u - 1/4$ in.) to $(d_u + 1/8$ in.)	Flange plates: Same as Case VI-A, except use weld size $A + t$ on lower column. Fillers (shop welded to lower column under flange plate): Select thickness t as 1/8-in. for $d_l = d_u$ and $d_l = (d_u + 1/8$ in.) or as 3/16-in. for $d_l = (d_u - 1/8$ in.) and $d_l = (d_u - 1/4$ in.). Select width to match flange plate and length as $L_L - 2$ in. Shims: Same as Case VI-A.
Case VI-C: $d_l = (d_u + 3/4$ in.) and over	Flange plates: Same as Case VI-A. Fillers (shop welded to upper column): Select thickness t as $(d_l - d_u) / 2$ minus 1/8-in. or 3/16-in., whichever results in 1/8-in. multiples of fill thickness. Select weld size B as minimum size from AISC Specification Section J2. Select weld length as $L_U - 1/4$ in. Select filler width as flange plate width and filler length as $L_U - 1/4$-in. Shims: Same as Case VI-A.

Table 14-3 (continued)
Typical Column Splices
Case VI:
Combination bolted and welded column splices between columns with depths d_u and d_l nominally the same.

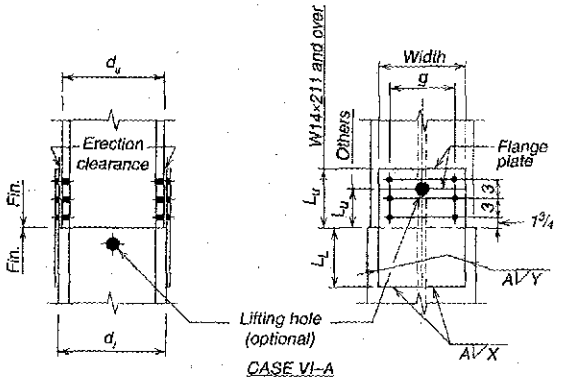

CASE VI–A

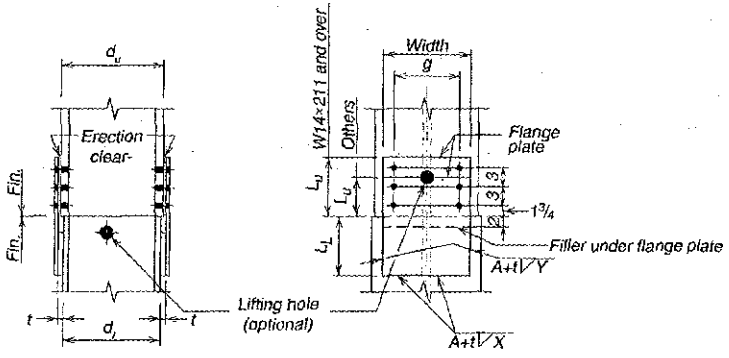

CASE VI–B

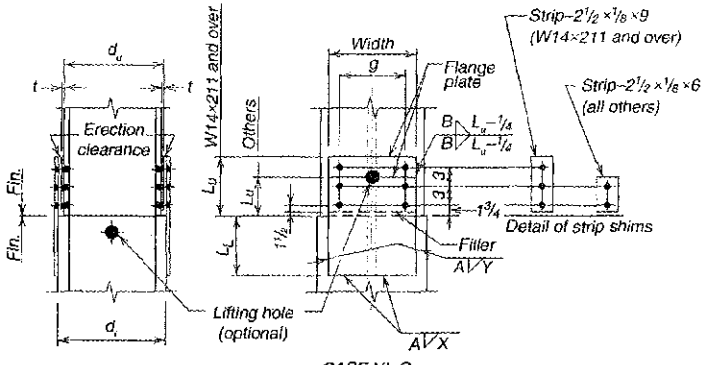

CASE VI–C

Table 14-3 (continued)
Typical Column Splices
Case VII:
Combination bolted and welded flange-plated column splices between columns with depth d_u nominally 2 in. less than depth d_l. Fillers developed for bearing.

Case VII-A: Fillers of width less than upper column flange width.	Flange plates: Same as Case VI-A. Fillers (shop welded to upper column): Select filler thickness t as $(d_l - d_u)/2$ minus $\frac{1}{8}$-in. or $\frac{3}{16}$-in., whichever results in $\frac{1}{8}$-in. multiples of filler thickness. Select weld size B from AISC Specification; $\leq\frac{5}{16}$-in. preferred. Select weld length L_B to develop bearing strength of filler. Select filler width not less than flange plate width but not greater than upper column flange width $-2M$ (see Case IV). Select filler length as L_B, subject to Note 4.
Case VII-B: Filler of width greater than upper column flange width. Use Case VII-B only when fillers must be widened to provide additional bearing area.	Flange plates: Same as Case VI-A. Fillers (shop welded to upper columns): Same as Case VII-A except select filler width as upper column flange width + $2M$ (see Case IV) rounded to the next larger $\frac{1}{2}$-in. increment.

Note 4:
If fill length based on L_B is excessive, place weld of size B across end of fill and reduce L_B by one-half of such additional weld length, but not less than L_U. Omit return welds, Case VII-B.

Table 14-3 (continued)
Typical Column Splices
Case VII:
Combination bolted and welded flange-plated column splices between columns with depth d_u nominally 2 in. less than depth d_l. Fillers developed for bearing.

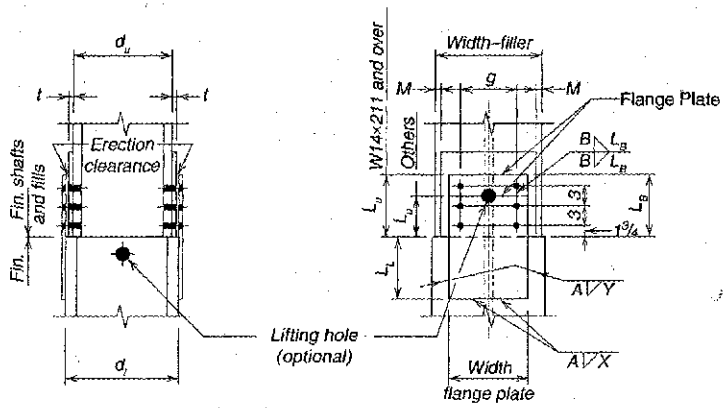

CASE VII–A

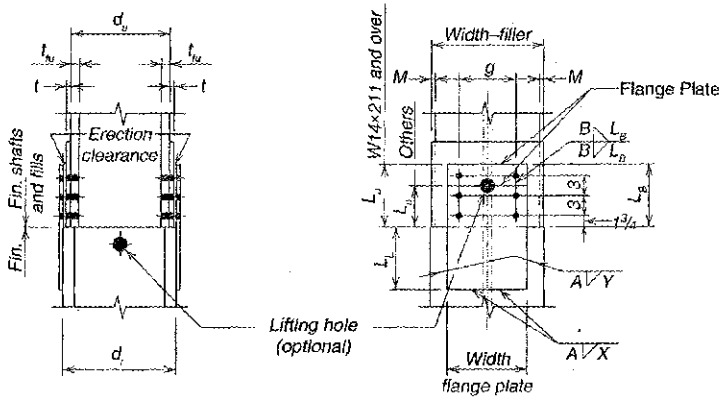

CASE VII–B

Table 14-3 (continued)
Typical Column Splices
Case VIII:
Directly welded flange column splices between columns with depths d_u and d_l nominally the same.

These types of splices exhibit versatility. The flanges may be partial-joint-penetration welded as in Cases VIIIA and VIIIB, or complete-joint-penetration welded as in Cases VIIIC, VIIID, and VIIIE The webs may be spliced using the channel(s) as shown in Cases VIIIA, VIIIB, VIIIC, and VIIID, or complete-joint-penetration welded as shown in Case VIIIE. The use of a channel or channels at the web splice provides a higher degree of restraint during the erection phase than does a plate or plates. The use of partial-joint-penetration flange welds provide greater stability during the erection phase than do complete-joint-penetration welds.

The adequacy of any splice arrangement must be confirmed by the user. This is especially true in regions where high winds are prevalent or when the concentrated weight of the fabricated column is significantly off its centerline.When using partial-joint-penetration flange welds, a land width of ¼-in. or greater should be used. The weld sizes are based on the thickness of the thinner column flange, regardless of whether it is the upper or lower column.

When column flange thicknesses are less than ½-in. it may be more efficient to use flange splice plates as shown in previous cases.

See the table below for minimum effective weld sizes for partial-penetration groove welds.

Partial Penetration Groove Width	
[a]Thickness of Column Material T_u	Minimum Effective Weld Size E
[b]Over ½ to ¾, incl.	¼
Over ¾ to 1½, incl.	5/16
Over 1½ to 2¼, incl.	⅜
Over 2¼ to 6, incl.	½
Over 6	⅝

[a]Thickness of thinner part joined.
[b]For less than ½, use splice plates.

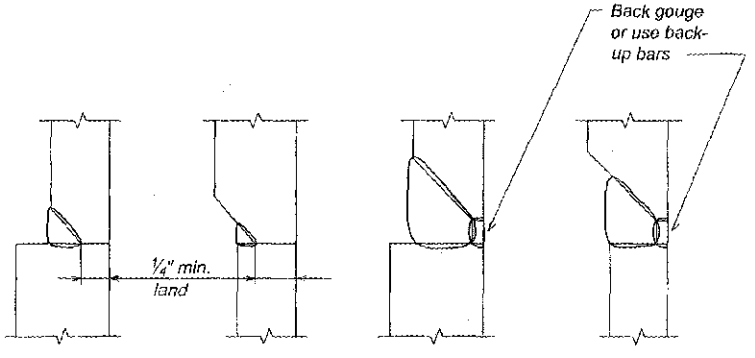

(a) Partial-joint-penetration groove welds

(b) Complete-joint-penetration groove welds

Table 14-3 (continued)
Typical Column Splices
Case VIII:
Directly welded flange column splices between columns with depths d_u and d_l nominally the same.

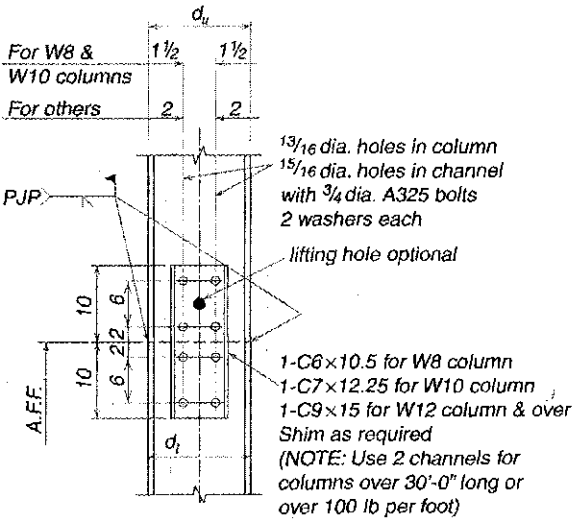

CASE VIII A

All-bolted web splice, partial-joint-penetration flange welds

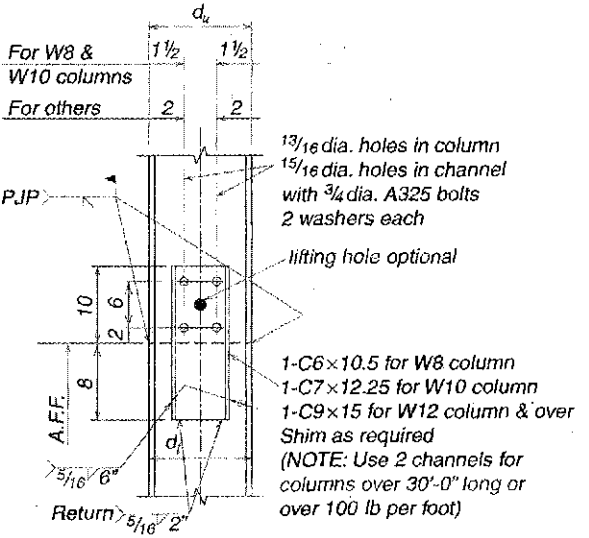

Note: User to verify weld accessibility of channel to lower column shaft, or consider the use of a bolted-bolted connection.

CASE VIII B

Combination bolted and welded web splice, partial-joint-penetration flange welds

Table 14-3 (continued)
Typical Column Splices
Case VIII:
Directly welded flange column splices between columns with depths d_u and d_l nominally the same.

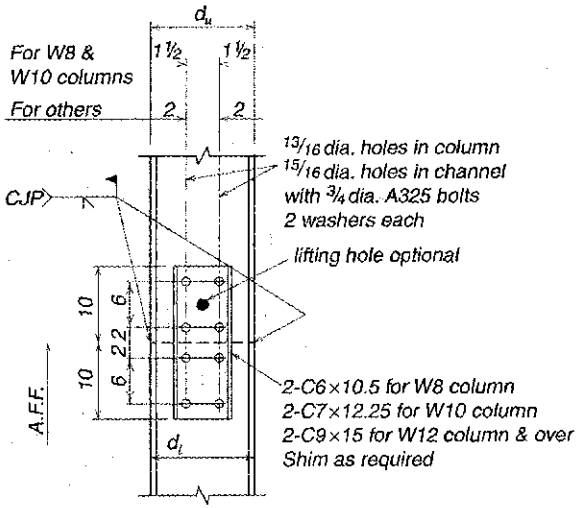

CASE VIII C

All-bolted web splice, complete-joint-penetration flange welds

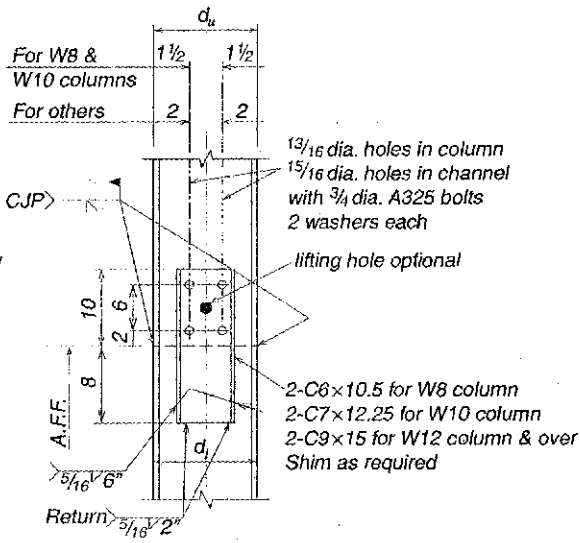

Note: User to verify weld accessibility of channel to lower column shaft, or consider the use of a bolted-bolted connection.

CASE VIII D

Combination bolted and welded web splice, partial-joint-penetration flange welds

Table 14-3 (continued)
Typical Column Splices
Case VIII:
Directly welded flange column splices between columns with depths d_u and d_l nominally the same.

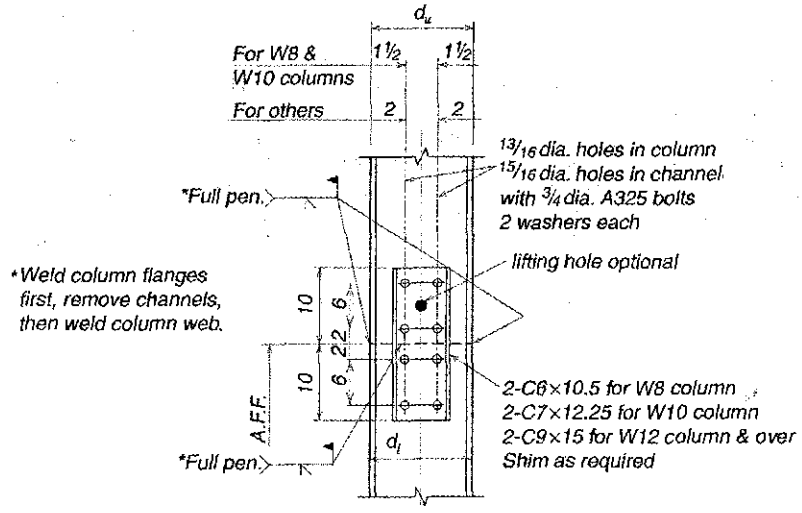

CASE VIII E

web splice, complete-joint-penetration flange and web welds

Table 14-3 (continued)
Typical Column Splices
Case IX:
Butt-plated column splices between columns with depth d_u nominally 2 in. less than depth d_l.

Butt plate: Select a butt plate thickness of 1½-in. for W8 over W10 columns and 2 in. for all other combinations. Select butt plate width and length not less than w_l and d_l assuming the lower is the larger column shaft.

Weld: Select weld to upper column based on the thicker of t_{fu} and t_p. Select weld to lower column based on the thicker of t_{fl} and t_p. The edge preparation required by the groove weld is usually performed on the column shafts. However, special cases such as when the butt plate must be field welded to the lower column require special consideration.

Erection: clip angles, such as those shown in the sketch below, help to locate and stabilize the upper column during the erection phase.

Table 14-3 (continued)
Typical Column Splices
Case IX:
Butt-plated column splices between columns with depth d_u nominally 2 in. less than depth d_l.

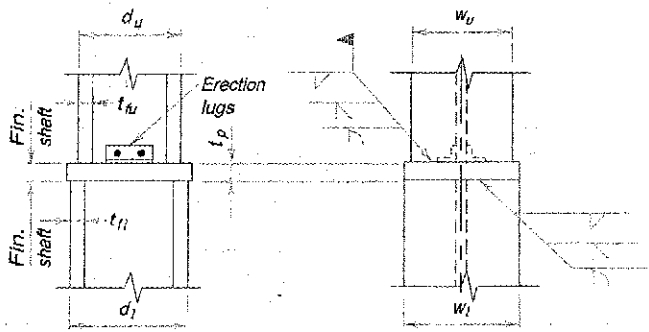

CASE IX

Table 14-3 (continued)
Typical Column Splices
Cases X, XI, XII
Special column splices.

Case X: Directly welded splice between tubular and/or box-shaped columns.	Welds may be either partial-joint- or complete-joint-penetration. The strength of partial-joint-penetration welds is a function of the column wall thickness and appropriate guidelines for minimum land width and effective weld size must be observed. This type of splice usually requires lifting and alignment devices. For lifting devices see Figure 14-10. For alignment devices see Figure 14-11.
Case XI: Butt-plated splices between tubular and/or box-shaped columns.	The butt-plate thickness is selected based on the AISC Specification. Welds may be either partial- or complete-penetration-groove welds, or, if adequate space is provided, fillet welds may be used. Weld strength is based on the thickness of connected material. See comments under Case X above regarding lifting and alignment devices.
Case XII: Butt-plated column splices between W-shape columns and tubular or box-shaped columns.	See comments under Case XI above.

Table 14-3 (continued)
Typical Column Splices
Cases X, XI, XII
Special column splices.

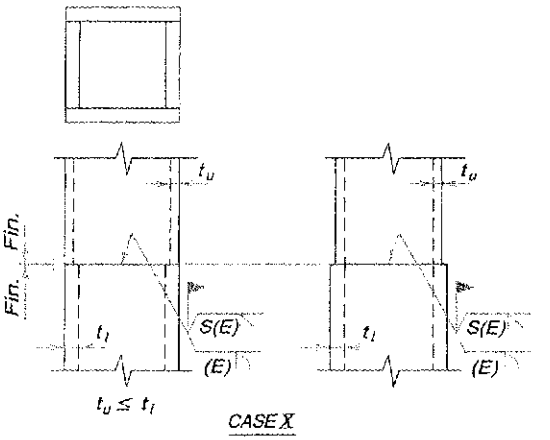

CASE X

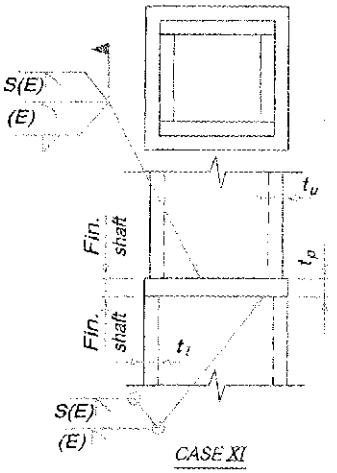

CASE XI

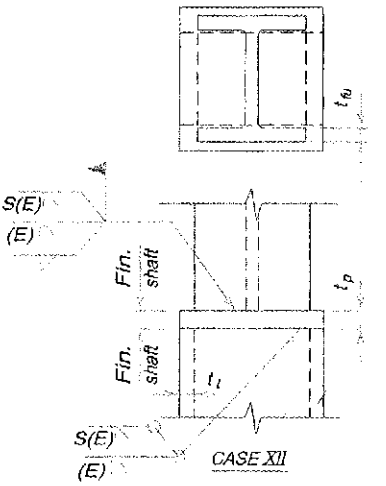

CASE XII

PART 15

DESIGN OF HANGER CONNECTIONS, BRACKET PLATES, AND CRANE-RAIL CONNECTIONS

SCOPE 15–2
HANGER CONNECTIONS 15–2
BRACKET PLATES 15–3
CRANE-RAIL CONNECTIONS 15–6
Bolted Splices 15–6
Table 15-1. Crane Rail Splices 15–7
Welded Splices 15–7
Hook Bolt Fastenings 15–8
Rail Clip Fastenings 15–8
Rail Clamp Fastenings 15–8
Patented Rail Clip Fastenings 15–9
DESIGN TABLE DISCUSSION 15–9
PART 15 REFERENCES 15–11
DESIGN TABLES 15–12
Table 15-2. Preliminary Hanger Connection Selection Table 15–12
Table 15-3. Net Plastic Section Modulus, Z_{net} 15–14
Table 15-4. Dimensions and Weights of Clevises 15–16
Table 15-5. Clevis Numbers Compatible with Various Rods and Pins 15–17
Table 15-6. Dimensions and Weights of Turnbuckles 15–18
Table 15-7. Dimensions and Weights of Sleeve Nuts 15–19
Table 15-8. Dimensions and Weights of Recessed-Pin Nuts 15–20
Table 15-9. Dimensions and Weights of Clevis and Cotter Pins 15–21

SCOPE

The specification requirements and other design considerations summarized in this Part apply to the design of hanger connections, bracket plates, and crane-rail connections. For the design of similar connections for HSS and pipe, see the AISC *Specification* Chapter K.

HANGER CONNECTIONS

Hanger connections, illustrated in Figure 15-1, are usually made with a plate, tee, angle, or pair of angles. The available strength of a hanger connection is determined from the applicable limit states for the bolts (see Part 7), welds (see Part 8), and connecting elements (see Part 9). In all cases, the available strength, ϕR_n or R_n/Ω, must exceed the required strength, R_u or R_a.

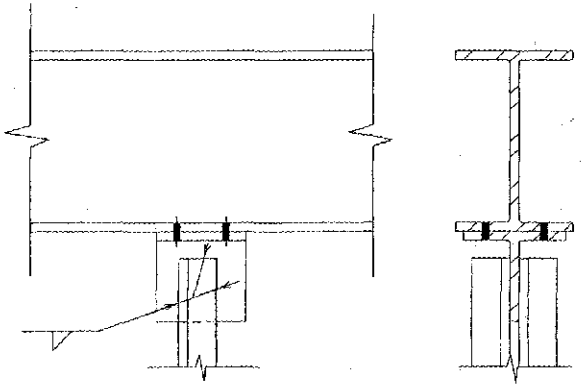

(a) Tee hanger

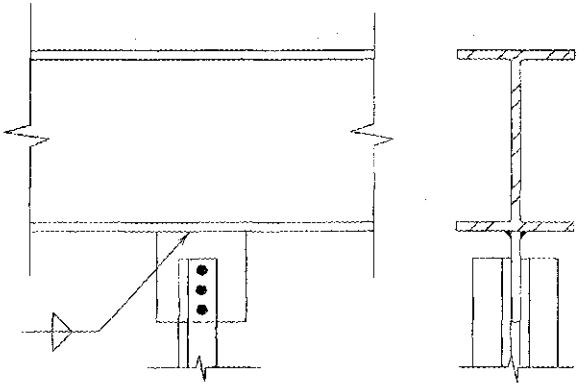

(b) Plate hanger

Fig. 15-1. Typical hanger connections.

BRACKET PLATES

A bracket plate, illustrated in Figure 15-2, acts as a cantilevered beam. The available strength of a bracket plate is determined from the applicable limit states for the bolts (see Part 7), welds (see Part 8), and connecting elements (see Part 9). Additionally the following checks must be considered: flexural yielding at Sections a-a in Figure 15-2; flexural rupture through Sections a-a in Figure 15-2; and shear yielding, local yielding and local buckling through Sections b-b in Figure 15-2 (Muir and Thornton, 2004). The following procedures are for a single bracket plate with the applied load P_r, where P_r is the required strength using LRFD load combinations, P_u, or the required strength using ASD load combinations, P_a. In all cases, the available strength must equal or exceed the required strength. The seat plate of Figure 15-2 should be attached to the column and to the bracket plate(s) to prevent sidesway.

The required flexural strength at Sections a-a in Figure 15-2 is

LRFD		ASD	
$M_u = P_u e$	(15-1a)	$M_a = P_a e$	(15-1b)

where

e = distance shown in Figure 15-2, in.

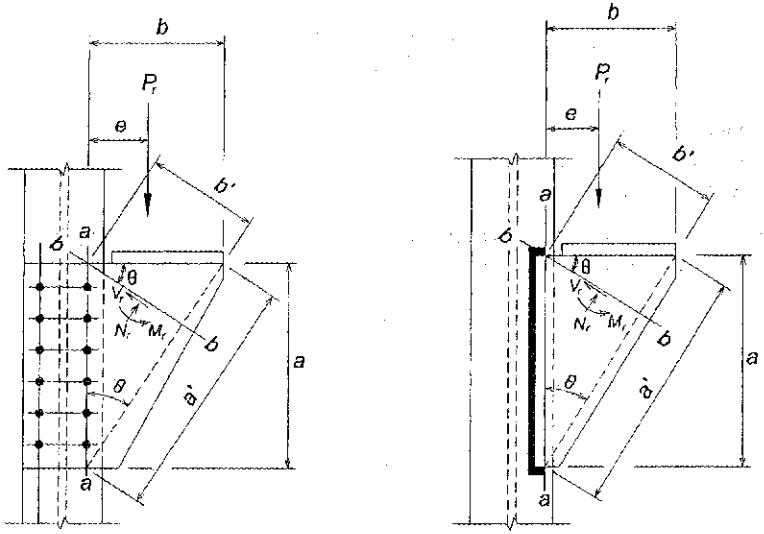

(a) bolted *(b) welded*

$$N_r = P_r \cos\theta$$
$$V_r = P_r \sin\theta$$
$$M_r = P_r e - N_r (b'/2)$$

Fig. 15-2. Bracket-plate connections.

For flexural yielding, the available strength, ϕM_n or M_n/Ω, of the bracket plate is

$$M_n = F_y Z \tag{15-2}$$

$$\phi = 0.90 \qquad \Omega = 1.67$$

where

Z = gross plastic section modulus of the bracket plate at Sections a-a in Figure 15-2, in.^{3}

For flexural rupture, the available strength, ϕM_n or M_n/Ω, of the bracket plate is

$$M_n = F_u Z_{net} \tag{15-3}$$

$$\phi = 0.75 \qquad \Omega = 2.00$$

where

Z_{net} = net plastic section modulus of the bracket plate at Sections a-a in Figure 15-2, in.^{3} See Table 15-3 for the determination of Z_{net} for standard holes. General equations for determination of Z_{net} follow (Mohr and Murray, 2008).

For an odd number of bolt rows

$$Z_{net} = \frac{1}{4} t(s - d_h')(n^2 s + d_h') \tag{15-4}$$

For an even number of bolt rows

$$Z_{net} = \frac{1}{4} t(s - d_h')n^2 s \tag{15-5}$$

where

d_h' = hole diameter + $^1/_{16}$, in.
n = number of bolt rows
s = vertical bolt row spacing, in.

In both cases, the vertical edge distances are assumed to be $s/2$ with plate depth of $a = ns$.

The required shear strength at Sections b-b in Figure 15-2 is

LRFD		ASD	
$V_u = P_u \sin\theta$	(15-6a)	$V_a = P_a \sin\theta$	(15-6b)

For shear yielding, the available strength, ϕV_n or V_n/Ω, of the bracket plate is

$$V_n = 0.6 F_y t b' \tag{15-7}$$

$$\phi = 1.00 \qquad \Omega = 1.50$$

where

$b' = a \sin\theta$, in.
a = depth of bracket plate, in.
t = thickness of bracket plate, in.
θ = angle shown in Figure 15-2, degrees

The required normal and flexural strength at Sections b-b in Figure 15-2 is

LRFD		ASD	
$M_u = P_u e - N_u\left(\frac{b'}{2}\right)$	(15-8a)	$M_a = P_a e - N_a\left(\frac{b'}{2}\right)$	(15-8b)
$N_u = P_u \cos\theta$	(15-9a)	$N_a = P_a \cos\theta$	(15-9b)

For interaction of normal and flexural strengths, the following interaction equation must be satisfied:

$$\frac{N_r}{N_c} + \frac{M_r}{M_c} \le 1.0 \tag{15-10}$$

The nominal normal strength of the bracket plate for the limit states of local yielding and local buckling is

$$N_n = F_{cr} t b', \text{ kips} \tag{15-11}$$

and the nominal flexural strength of the bracket plate for the limit states of local yielding and local buckling is

$$M_n = \frac{F_{cr} t b'^2}{4}, \text{ kip-in.} \tag{15-12}$$

For design by LRFD

$M_c = \phi M_n$

$M_r = M_u$

$N_c = \phi N_n$

$N_r = N_u$

$\phi = 0.90$

For design by ASD

$M_c = \frac{M_n}{\Omega}$

$M_r = M_a$

$N_c = \frac{N_n}{\Omega}$

$N_r = N_a$

$\Omega = 1.67$

For the limit state of local yielding of the bracket plate,

$$F_{cr} = F_y \tag{15-13}$$

For the limit state of local buckling of the bracket plate,

$$F_{cr} = QF_y \tag{15-14}$$

When $\lambda \leq 0.70$, the limit state of local buckling need not be considered (that is, $Q = 1$).
When $0.70 < \lambda \leq 1.41$

$$Q = 1.34 - 0.486\lambda \tag{15-15}$$

When $1.41 < \lambda$

$$Q = \frac{1.30}{\lambda^2} \tag{15-16}$$

where

$$\lambda = \frac{\left(\frac{b'}{t}\right)\sqrt{F_y}}{5\sqrt{475 + 1{,}120\left(\frac{b'}{a'}\right)^2}} \tag{15-17}$$

$$a' = \frac{a}{\cos\theta} = \text{length of free edge, in.} \tag{15-18}$$

CRANE-RAIL CONNECTIONS

Bolted Splices

It is desirable to use properly installed and maintained bolted splice bars in crane-rail connections rather than welded splice bars, which are frequently subject to failure in service.

Standard rail drilling and joint-bar punching, as furnished by manufacturers of light standard rails for track work, include round holes in rail ends and slotted holes in joint bars to receive standard oval-neck track bolts. Holes in rails are oversized and punching in joint bars is spaced to allow $^1/_{16}$-in. to $^1/_8$-in. clearance between rail ends (see manufacturers' catalogs for spacing and dimensions of holes and slots). Although this construction is satisfactory for track and light crane service, its use in general crane service may lead to high maintenance and joint failure. Welded splices are therefore preferable.

For best service in bolted splices, it is recommended that tight joints be required for all rails for crane service. This will require rail ends to be finished, and the special rail drilling and joint-bar punching tabulated in Table 15-1 and shown in Figure 15-3. Special rail drilling is accepted by some mills, or rails may be ordered blank for shop drilling. End finishing of standard rails can be done at the mill. However, light rails often must be end-finished in the shop or ground at the site prior to erection. In the crane rail range from 104 to 175 lb per yard, rails and joint bars are manufactured to obtain a tight fit and no further special end finishing, drilling or punching is required. Because of cumulative tolerance variations in holes, bolt diameters and rail ends, a slight gap may sometimes occur. It may sometimes be necessary to ream holes through joined bar and rail to permit entry of bolts.

Joint bars for crane service are provided in various sections to match the rails. Joint bars for light and standard rails can be purchased blank for special shop punching to obtain tight joints. See manufacturer data for dimensions, material specifications, and the identification necessary to match the crane-rail section.

Joint-bar bolts, as distinguished from oval-neck track bolts, have straight shanks to the head and are manufactured to ASTM A449 specifications. Nuts are manufactured to ASTM A563 Grade B specifications. Alternatively, ASTM A325 bolts and compatible ASTM A563 nuts can be used. Bolt assembly includes an alloy steel spring washer, furnished to American

Table 15-1
Crane Rail Splices

Rail						Joint Bar						Bolt				Washer		Wt. 2 Bars Bolts, Nuts, Washers	
	Drilling					Punching													
Wt. per Yard	g	Hole Dia.	A	B	C	Hole Dia.	D	B	C	L	G	Dia.	Grip	I	H	Inside Dia.	Thickness and Width	With Ftg.	W/O Ftg.
lb	in.	in.	in.	in.	in.	in.	in.	in.	in.	in.	in.	in.	in.	in.	in.	in.	in.	lb	lb
40	$1^{71}/_{128}$	$^{13}/_{16}$*	$2^1/_2$	5	–	$^{13}/_{16}$*	$4^{15}/_{16}$*	5	–	20	$2\ ^3/_{16}$	$^3/_4$	$1^{15}/_{16}$	$3^1/_2$	$2^1/_2$	$^{13}/_{16}$	$^7/_{16} \times ^3/_8$	20.0	16.5
60	$1^{115}/_{128}$	$^{13}/_{16}$*	$2^1/_2$	5	–	$^{13}/_{16}$*	$4^{15}/_{16}$*	5	–	24	$2^{11}/_{16}$	$^3/_4$	$2^{19}/_{32}$	4	$2^{11}/_{16}$	$^{13}/_{16}$	$^7/_{16} \times ^3/_8$	36.5	29.6
85	$2^{17}/_{64}$	$^{15}/_{16}$*	$2^1/_2$	5	–	$^{15}/_{16}$*	$4^{15}/_{16}$*	5	–	24	$3^{11}/_{32}$	$^7/_8$	$3^5/_{32}$	$4^3/_4$	$3^3/_{16}$	$^{15}/_{16}$	$^7/_{16} \times ^3/_8$	56.6	45.3
104	$2^7/_{16}$	$1^1/_{16}$	4	5	6	$1^1/_{16}$	$7^{15}/_{16}$	5	6	34	$3^1/_2$	1	$3^1/_2$	$5^1/_4$	$3^1/_2$	$1^1/_{16}$	$^7/_{16} \times ^1/_2$	73.5	55.4
135	$2^{15}/_{32}$	$1^3/_{16}$	4	5	6	$1^3/_{16}$	$7^{15}/_{16}$	5	6	34	–	$1^1/_8$	$3^5/_8$	$5^1/_2$	$3^{11}/_{16}$	$1^3/_{16}$	$^7/_{16} \times ^1/_2$	–	75.3
171	$2^5/_8$	$1^3/_{16}$	4	5	6	$1^3/_{16}$	$7^{15}/_{16}$	5	6	34	–	$1^1/_8$	$4^7/_{16}$	$5^1/_4$	$4^1/_{16}$	$1^3/_{16}$	$^7/_{16} \times ^1/_2$	–	90.8
175	$2^{21}/_{32}$	$1^3/_{16}$	4	5	6	$1^3/_{16}$	$7^{15}/_{16}$	5	6	34	–	$1^1/_8$	$4^1/_8$	$6^1/_4$	$3^{15}/_{16}$	$1^3/_{16}$	$^7/_{16} \times ^1/_2$	–	87.7

*Special rail drilling and joint bar punching.
Ftg. = fitting

Railway Engineering and Maintenance of Way Association (AREMA) specifications. After installation, bolts should be retightened within 30 days and every three months thereafter.

Welded Splices

When welded splices are specified, consult the manufacturer for recommended rail-end preparation, welding procedure, and method of ordering. Although the joint continuity made possible by this method of splicing is desirable, the careful control required in all stages of the welding operation may be difficult to meet during crane-rail installation. Rails should not be attached to structural supports by welding. Rails with holes for joint bar bolts should not be used in making welded splices.

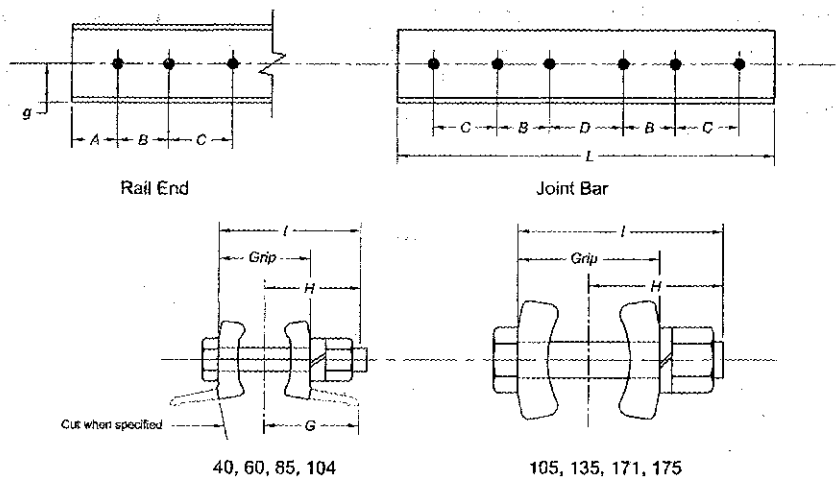

Fig. 15-3. Special rail drilling and joint-bar punching.

Hook Bolt Fastenings

Hook bolts (Figure 15-4) are used primarily with light rails when attached to beams that are too narrow for clamps. Rail adjustment to $\pm 1/2$ in. is inherent in the threaded shank. Hook bolts are paired alternately 3 to 4 in. apart, spaced at about 24 in. on center. The special rail drilling required must be done in the fabricator's shop. Hook bolts are not recommended for use with heavy-duty cycle cranes [Crane Manufacturers Association of America (CMAA) Classes, D, E, and F]. It is generally recommended that hook bolts should not be used in runway systems that are longer than 500 ft because the bolts do not allow for longitudinal movement of the rail.

Rail Clip Fastenings

Rail clips are forged or cast devices that are shaped to match specific rail profiles. They are usually bolted to the runway girder flange with one bolt or are sometimes welded. Rail clips have been used satisfactorily with all classes of cranes. However, one drawback is that when a single bolt is used, the clip can rotate in response to rail longitudinal movement. This clip rotation can cause cam action that might force the rail out of alignment. Because of this limitation, rail clips should only be used in crane systems subject to infrequent use, and for runways less than 500 ft in length.

Rail Clamp Fastenings

Rail clamps are a common method of attachment for heavy-duty cycle cranes. Rail clamps are detailed to provide two types: tight and floating (see Figure 15-5). Each clamp consists of two plates: an upper clamp plate and a lower filler plate. Dimensions shown are suggested. See manufacturers' catalogs for recommended gages, bolt sizes and detail dimensions not shown.

The lower plate is flat and nominally matches the height of the toe of the rail flange. The upper plate covers the lower plate and extends over the top of the lower rail flange. In the tight clamp, the upper plate is detailed to fit tightly to the lower tail flange top, thus "clamping" it tightly in place when the fasteners are tightened. In the past, the tight clamp had been illustrated with the filler plates fitted tightly against the rail flange toe. This tight fit-up was rarely achieved in practice and is not considered to be necessary to achieve a tight type clamp. In the floating type clamp, the pieces are detailed to provide a clearance both alongside the rail flange toe and below the upper plate. The floating type does not, in reality, clamp the rail but merely holds the rail within the limits of the clamp clearances.

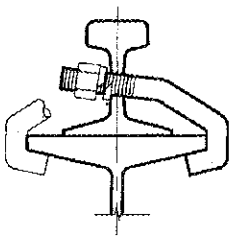

Fig. 15-4. Hook bolts.

High-strength bolts are recommended for both clamp types. Both types should be spaced 3 ft or less apart.

Patented Rail Clip Fastenings

Each manufacturer's literature presents in detail the desirable aspects of the various designs. In general, patented rail clips are easy to install due to their range of adjustment and provide both limitation of lateral movement and allowance for longitudinal movement. Patented rail clips should be considered as a viable alternative to conventional hook bolts, clips or clamps. Because of their desirable characteristics, patented rail clips can be used without restriction except as limited by the specific manufacturer's recommendations. Installations using patented rail clips sometimes incorporate pads beneath the rail. When this is done, the lateral float of the rail should be limited as in the case of the tight rail clamps.

DESIGN TABLE DISCUSSION

Table 15-2. Preliminary Hanger Connection Selection Table

Values are given for the available tensile strength per in. of fitting length in bending of a tee fitting flange or angle leg with $F_u = 58$ ksi and $F_u = 65$ ksi. The bending strength is calculated in terms of F_u, which provides good correlation with available test data (Thornton, 1992; Swanson, 2002). Table 15-2 can be used to select a trial fitting once the number and size of bolts required is known. The number of bolts required must be selected such that the available tensile strength of one bolt, ϕr_n or r_n/Ω, exceeds the required tensile force per bolt, r_{ut} or r_{at}.

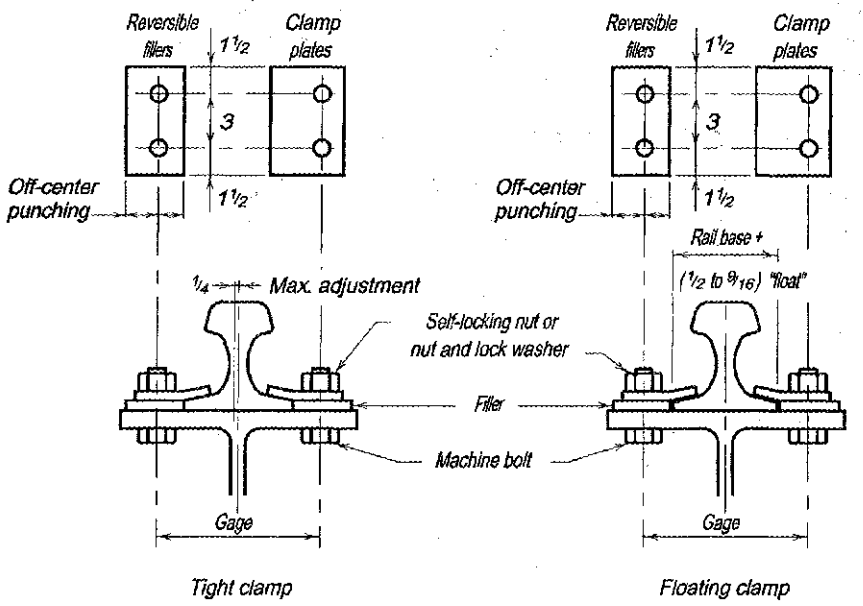

Fig. 15-5. Rail clamps.

In this table, it is assumed that equal moments exist at the face of the tee stem or angle leg and at the bolt line. The available flexural strength of the tee flange, $\phi_b M_n$ or M_n/Ω_b, is determined with

$$M_n = M_p = F_u Z \tag{15-19}$$

$$\phi_b = 0.90 \qquad \Omega_b = 1.67$$

In the above equation, the plastic section modulus, Z, per unit length of the angle or tee flange is

$$Z = \frac{t^2}{4} \tag{15-20}$$

where t is the thickness of the angle or tee flange, in. Thus, for a unit length of the angle or tee flange the available flexural strength, $\phi_b M_n$ or M_n/Ω_b, is determined with

$$M_n = \frac{F_u t^2}{4} \tag{15-21}$$

$$\phi_b = 0.90 \qquad \Omega_b = 1.67$$

The tensile force on the fitting per bolt row, $2r_{ut}$ or $2r_{at}$, must be less than the appropriate (LRFD or ASD) value shown in Table 15-2 times the tributary length per pair of bolts, p (length perpendicular to the elevation shown in Table 15-2).

Table 15-3. Net Plastic Section Modulus, Z_{net}

Values of the net plastic section modulus Z_{net} are given in Table 15-3 for standard holes and numbers of fasteners spaced 3 in. on center, the usual spacing for these connections. The values are determined using Equations 15-4 and 15-5.

Forged Steel Structural Hardware

Table 15-4. Dimensions and Weights of Clevises

Dimensions, weights and available strengths of clevises are listed in Table 15-4.

Table 15-5. Clevis Numbers Compatible with Various Rods and Pins

Compatibility of clevises with various rods and pins is given in Table 15-5.

Table 15-6. Dimensions and Weights of Turnbuckles

Dimensions, weights and available strengths of turnbuckles are listed in Table 15-6.

PART 15 REFERENCES

Mohr, B.A. and Murray, T.M. (2008), "Bending Strength of Steel Bracket and Splice Plates," *Engineering Journal*, AISC, Vol. 45, No. 2, 2nd Quarter, pp. 97–106.

Muir, L.S. and Thornton, W.A. (2004), "A Direct Method for Obtaining the Plate Buckling Coefficient for Double Coped Beams," *Engineering Journal*, AISC, Vol. 41, No. 3, 3rd Quarter, pp. 133–134.

Swanson, J.A. (2002), "Ultimate Strength Prying Models for Bolted T-Stub Connections," *Engineering Journal*, Vol. 39, No. 3, 3rd Quarter, pp. 136–147, AISC, Chicago, IL.

Thornton, W.A. (1992), "Strength and Serviceability of Hanger Connections," *Engineering Journal*, AISC, Vol. 29, No. 4, 4th Quarter, pp. 145–149, Chicago, IL. See also ERRATA, *Engineering Journal*, Vol. 33, No. 1, 1st Quarter, 1996, pp. 39, 40.

F_u = 58 ksi

Table 15-2a
Preliminary Hanger Connection Selection Table
Available tensile strength, kips per linear in., limited by bending of the flange

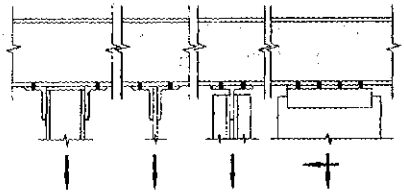

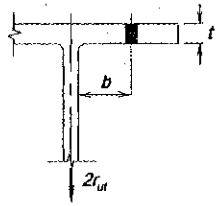

t, in.	b, in.									
	1		1 1/4		1 1/2		1 3/4		2	
	ASD	LRFD	ASD	LRFD	ASD	LRFD	ASD	LRFD	ASD	LRFD
5/16	3.39	5.10	2.71	4.08	2.26	3.40	1.94	2.91	1.70	2.55
3/8	4.88	7.34	3.91	5.87	3.26	4.89	2.79	4.19	2.44	3.67
7/16	6.65	9.99	5.32	7.99	4.43	6.66	3.80	5.71	3.32	5.00
1/2	8.68	13.1	6.95	10.4	5.79	8.70	4.96	7.46	4.34	6.53
9/16	11.0	16.5	8.79	13.2	7.33	11.0	6.28	9.44	5.49	8.26
5/8	13.6	20.4	10.9	16.3	9.04	13.6	7.75	11.7	6.78	10.2
11/16	16.4	24.7	13.1	19.7	10.9	16.4	9.38	14.1	8.21	12.3
3/4	19.5	29.4	15.6	23.5	13.0	19.6	11.2	16.8	9.77	14.7
13/16	22.9	34.5	18.3	27.6	15.3	23.0	13.1	19.7	11.5	17.2
7/8	26.6	40.0	21.3	32.0	17.7	26.6	15.2	22.8	13.3	20.0
15/16	30.5	45.9	24.4	36.7	20.3	30.6	17.4	26.2	15.3	22.9
1	34.7	52.2	27.8	41.8	23.2	34.8	19.8	29.8	17.4	26.1
1 1/16	39.2	58.9	31.4	47.1	26.1	39.3	22.4	33.7	19.6	29.5
1 1/8	44.0	66.1	35.2	52.9	29.3	44.0	25.1	37.8	22.0	33.0
1 3/16	49.0	73.6	39.2	58.9	32.6	49.1	28.0	42.1	24.5	36.8
1 1/4	54.3	81.6	43.4	65.3	36.2	54.4	31.0	46.6	27.1	40.8
	2 1/4		2 1/2		2 3/4		3		3 1/4	
5/16	1.51	2.27	1.36	2.04	1.23	1.85	1.13	1.70	1.04	1.57
3/8	2.17	3.26	1.95	2.94	1.78	2.67	1.63	2.45	1.50	2.26
7/16	2.95	4.44	2.56	4.00	2.42	3.63	2.22	3.33	2.05	3.07
1/2	3.86	5.80	3.47	5.22	3.16	4.75	2.89	4.35	2.67	4.02
9/16	4.88	7.34	4.40	6.61	4.00	6.01	3.66	5.51	3.38	5.08
5/8	6.03	9.06	5.43	8.16	4.93	7.41	4.52	6.80	4.17	6.27
11/16	7.30	11.0	6.57	9.87	5.97	8.97	5.47	8.22	5.05	7.59
3/4	8.68	13.1	7.81	11.7	7.10	10.7	6.51	9.79	6.01	9.03
13/16	10.2	15.3	9.17	13.8	8.34	12.5	7.64	11.5	7.05	10.6
7/8	11.8	17.8	10.6	16.0	9.67	14.5	8.86	13.3	8.18	12.3
15/16	13.6	20.4	12.2	18.4	11.1	16.7	10.2	15.3	9.39	14.1
1	15.4	23.2	13.9	20.9	12.6	19.0	11.6	17.4	10.7	16.1
1 1/16	17.4	26.2	15.7	23.6	14.3	21.4	13.1	19.6	12.1	18.1
1 1/8	19.5	29.4	17.6	26.4	16.0	24.0	14.7	22.0	13.5	20.3
1 3/16	21.8	32.7	19.6	29.4	17.8	26.8	16.3	24.5	15.1	22.6
1 1/4	24.1	36.3	21.7	32.6	19.7	29.7	18.1	27.2	16.7	25.1

F_u = 65 ksi

Table 15-2b
Preliminary Hanger Connection Selection Table
Available tensile strength, kips per linear in., limited by bending of the flange

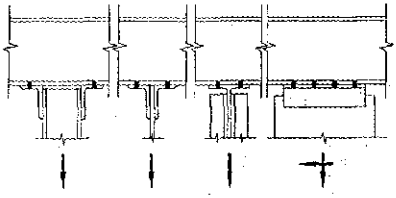

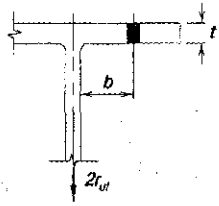

t, in.	b, in.									
	1		1 1/4		1 1/2		1 3/4		2	
	ASD	LRFD	ASD	LRFD	ASD	LRFD	ASD	LRFD	ASD	LRFD
5/16	3.80	5.71	3.04	4.57	2.53	3.81	2.17	3.26	1.90	2.86
3/8	5.47	8.23	4.38	6.58	3.65	5.48	3.13	4.70	2.74	4.11
7/16	7.45	11.2	5.96	8.96	4.97	7.46	4.26	6.40	3.72	5.60
1/2	9.73	14.6	7.78	11.7	6.49	9.75	5.56	8.36	4.87	7.31
9/16	12.3	18.5	9.85	14.8	8.21	12.3	7.04	10.6	6.16	9.25
5/8	15.2	22.9	12.2	18.3	10.1	15.2	8.69	13.1	7.60	11.4
11/16	18.4	27.7	14.7	22.1	12.3	18.4	10.5	15.8	9.20	13.8
3/4	21.9	32.9	17.5	26.3	14.6	21.9	12.5	18.8	10.9	16.5
13/16	25.7	38.6	20.6	30.9	17.1	25.7	14.7	22.1	12.8	19.3
7/8	29.8	44.8	23.8	35.8	19.9	29.9	17.0	25.6	14.9	22.4
15/16	34.2	51.4	27.4	41.1	22.8	34.3	19.5	29.4	17.1	25.7
1	38.9	58.5	31.1	46.8	25.9	39.0	22.2	33.4	19.5	29.3
1 1/16	43.9	66.0	35.2	52.8	29.3	44.0	25.1	37.7	22.0	33.0
1 1/8	49.3	74.0	39.4	59.2	32.8	49.4	28.1	42.3	24.6	37.0
1 3/16	54.9	82.5	43.9	66.0	36.6	55.0	31.4	47.1	27.4	41.2
1 1/4	60.8	91.4	48.7	73.1	40.5	60.9	34.8	52.2	30.4	45.7
	2 1/4		2 1/2		2 3/4		3		3 1/4	
5/16	1.69	2.54	1.52	2.29	1.38	2.08	1.27	1.90	1.17	1.76
3/8	2.43	3.66	2.19	3.29	1.99	2.99	1.82	2.74	1.68	2.53
7/16	3.31	4.98	2.98	4.48	2.71	4.07	2.48	3.73	2.29	3.45
1/2	4.32	6.50	3.89	5.85	3.54	5.32	3.24	4.88	2.99	4.50
9/16	5.47	8.23	4.93	7.40	4.48	6.73	4.11	6.17	3.79	5.70
5/8	6.76	10.2	6.08	9.14	5.53	8.31	5.07	7.62	4.68	7.03
11/16	8.18	12.3	7.36	11.1	6.69	10.1	6.13	9.22	5.66	8.51
3/4	9.73	14.6	8.76	13.2	7.96	12.0	7.30	11.0	6.74	10.1
13/16	11.4	17.2	10.3	15.4	9.34	14.0	8.56	12.9	7.91	11.9
7/8	13.2	19.9	11.9	17.9	10.8	16.3	9.93	14.9	9.17	13.8
15/16	15.2	22.9	13.7	20.6	12.4	18.7	11.4	17.1	10.5	15.8
1	17.3	26.0	15.6	23.4	14.2	21.3	13.0	19.5	12.0	18.0
1 1/16	19.5	29.4	17.6	26.4	16.0	24.0	14.6	22.0	13.5	20.3
1 1/8	21.9	32.9	19.7	29.6	17.9	26.9	16.4	24.7	15.2	22.8
1 3/16	24.4	36.7	22.0	33.0	20.0	30.0	18.3	27.5	16.9	25.4
1 1/4	27.0	40.6	24.3	36.6	22.1	33.2	20.3	30.5	18.7	28.1

Table 15-3
Net Plastic Section Modulus, Z_{net}, in.^{3}
(Standard Holes)

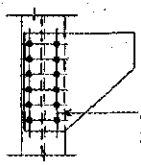

# Bolts in One Vertical Row, *n*	Bracket Plate Depth, *d*, in.	Nominal Bolt Diameter, *d*, in.							
		3/4					7/8		
		Bracket Plate Thickness, *t*, in.							
		1/4	3/8	1/2	5/8	3/4	3/8	1/2	5/8
2	6	1.59	2.39	3.19	3.98	4.78	2.25	3.00	3.75
3	9	3.70	5.55	7.40	9.26	11.1	5.25	7.00	8.75
4	12	6.38	9.56	12.8	15.9	19.1	9.00	12.0	15.0
5	15	10.1	15.1	20.2	25.2	30.2	14.3	19.0	23.8
6	18	14.3	21.5	28.7	35.9	43.0	20.3	27.0	33.8
7	21	19.6	29.5	39.3	49.1	58.9	27.8	37.0	46.3
8	24	25.5	38.3	51.0	63.8	76.5	36.0	48.0	60.0
9	27	32.4	48.6	64.8	81.0	97.2	45.8	61.0	76.3
10	30	39.8	59.8	79.7	99.6	120	56.3	75.0	93.8
12	36	57.4	86.1	115	143	172	81.0	108	135
14	42	78.1	117	156	195	234	110	147	184
16	48	102	153	204	255	306	144	192	240
18	54	129	194	258	323	387	182	243	304
20	60	159	239	319	398	478	225	300	375
22	66	193	289	386	482	579	272	363	454
24	72	230	344	459	574	689	324	432	540
26	78	269	404	539	673	808	380	507	634
28	84	312	469	625	781	937	441	588	735
30	90	359	538	717	896	1080	506	675	844
32	96	408	612	816	1020	1220	576	768	960
34	102	461	691	921	1150	1380	650	867	1080
36	108	516	775	1030	1290	1550	729	972	1220

Notes:
The area reduction per hole is assumed to be $d_h + 1/16$ in.
Bolts spaced 3 in. vertically with 1 1/2-in. edge distance at top and bottom.
Interpolate for intermediate plate thicknesses.
Values are based on Equations 15-4 and 15-5.

Table 15-3 (continued)
Net Plastic Section Modulus, Z_{net}, in.^{3}
(Standard Holes)

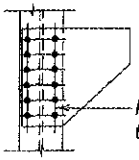

# Bolts in One Vertical Row, n	Bracket Plate Depth, d, in.	Nominal Bolt Diameter, d, in.						
		7/8		1				
		Bracket Plate Thickness, t, in.						
		3/4	7/8	1/2	5/8	3/4	7/8	1
2	6	4.50	5.25	2.81	3.52	4.22	4.92	5.63
3	9	10.5	12.3	6.59	8.24	9.89	11.5	13.2
4	12	18.0	21.0	11.3	14.1	16.9	19.7	22.5
5	15	28.5	33.3	17.8	22.3	26.8	31.2	35.7
6	18	40.5	47.3	25.3	31.6	38.0	44.3	50.6
7	21	55.5	64.8	34.7	43.4	52.1	60.8	69.4
8	24	72.0	84.0	45.0	56.3	67.5	78.8	90.0
9	27	91.5	107	57.2	71.5	85.8	100	114
10	30	113	131	70.3	87.9	105	123	141
12	36	162	189	101	127	152	177	203
14	42	221	257	138	172	207	241	276
16	48	288	336	180	225	270	315	360
18	54	365	425	228	285	342	399	456
20	60	450	525	281	352	422	492	563
22	66	545	635	340	425	510	596	681
24	72	648	756	405	506	608	709	810
26	78	761	887	475	594	713	832	951
28	84	882	1030	551	689	827	965	1100
30	90	1010	1180	633	791	949	1110	1270
32	96	1150	1340	720	900	1080	1260	1440
34	102	1300	1520	813	1020	1220	1420	1630
36	108	1460	1700	911	1140	1370	1590	1820

Notes:
The area reduction per hole is assumed to be $d_b + 1/16$ in.
Bolts spaced 3 in. vertically with $1\frac{1}{2}$-in. edge distance at top and bottom.
Interpolate for intermediate plate thicknesses.
Values are based on Equations 15-4 and 15-5.

Table 15-4
Dimensions and Weights of Clevises

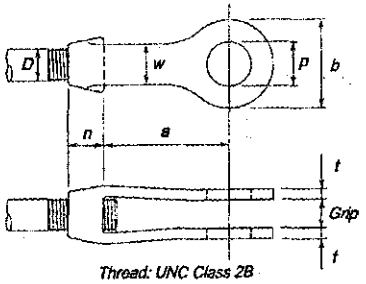

Thread: UNC Class 2B

Grip = plate thickness + ¼ in.

Clevis Number	Dimensions, in.							Weight, lb	Available Strength, kips*	
	Max. *D*	Max. *p*	*b*	*n*	*a*	*w*	*t*		ASD	LRFD
2	5/8	3/4	1 7/16	5/8	3 9/16	1 1/16	5/16 (+1/32, -0)	1	5.83	8.75
2 1/2	7/8	1 1/2	2 1/2	1	4	1 1/4	5/16 (+1/32, -0)	2.5	12.5	18.8
3	1 3/8	1 3/4	3	1 1/4	5 1/16	1 1/2	1/2 (+1/16, -1/32)	4	25.0	37.5
3 1/2	1 1/2	2	3 1/2	1 1/2	6	1 3/4	1/2 (+1/16, -1/16)	6	30.0	45.0
4	1 3/4	2 1/4	4	1 3/4	5 15/16	2	1/2 (+1/16, -1/16)	9	35.0	52.5
5	2 1/8	2 1/2	5	2 1/4	7	2 1/2	5/8 (+3/32, -0)	16	62.5	93.8
6	2 1/2	3	6	2 3/4	8	3	3/4 (+3/32, -0)	26	90.0	135
7	3	3 3/4	7	3	9	3 1/2	7/8 (+1/8, -1/16)	36	114	171
8	4	4 1/4	8	4	10 1/8	4	1 1/2 (+1/8, -1/16)	90	225	338

Notes:
Weights and dimensions of clevises are typical; products of all suppliers are essentially similar. User shall verify with the manufacturer that product meets available strength specifications above.
* Tabulated available strengths are based on $\phi = 0.50$, $\Omega = 3.00$. Strength at service load corresponds to a 3:1 safety factor using maximum pin diameter.

Table 15-5
Clevis Numbers Compatible with Various Rods and Pins

Dia. of Tap, in.	Diameter of Pin, in.																	
	1/2	5/8	3/4	7/8	1	1 1/4	1 1/2	1 3/4	2	2 1/4	2 1/2	2 3/4	3	3 1/4	3 1/2	3 3/4	4	4 1/4
3/8	2	2	2															
1/2	2	2	2															
5/8	2	2	2	2 1/2	2 1/2	2 1/2	2 1/2											
3/4			2 1/2	2 1/2	2 1/2	2 1/2	2 1/2											
7/8				2 1/2	2 1/2	2 1/2	2 1/2	3										
1					3	3	3	3										
1 1/8					3	3	3	3	3 1/2									
1 1/4					3	3	3	3	3 1/2									
1 3/8						3	3	3 1/2	3 1/2	4								
1 1/2						3 1/2	3 1/2	4	4	5								
1 5/8						4	4	4	5	5	5							
1 3/4							4	5	5	5	5							
1 7/8							5	5	5	5	5							
2							5	5	5	5	5	6	6					
2 1/8								5	5	6	6	6	6					
2 1/4									6	6	6	6	6	7	7			
2 3/8									6	6	6	6	7	7	7	7		
2 1/2									6	6	6	7	7	7	7	7		
2 5/8											7	7	7	7	7	8		
2 3/4											7	7	7	7	8	8		
2 7/8											7	8	8	8	8	8	8	8
3											7	8	8	8	8	8	8	8
3 1/8												8	8	8	8	8	8	8
3 1/4												8	8	8	8	8	8	8
3 3/8												8	8	8	8	8	8	8
3 1/2													8	8	8	8	8	8
3 5/8													8	8	8	8	8	
3 3/4													8	8	8	8	8	
3 7/8														8	8	8		
4														8	8			

Notes:
Tabular values assume that the net area of the clevis through the pin hole is greater than or equal to 125% of the net area of the rod, and is applicable to round rods without upset ends. For other net area ratios, the required clevis size may be calculated by referring to the dimensions tabulated in Tables 15-4 and 7-17.

Table 15-6
Dimensions and Weights of Turnbuckles

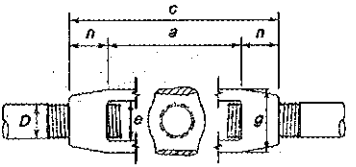

Threads: UNC and 4UN Class 2B

Diameter *D*, in.	Dimensions, in.					Weight (lb) for Length *a*, in.						Available Strength, kips	
	a	*n*	*c*	*e*	*g*	6	9	12	18	24	26	ASD R_n/Ω*	LRFD ϕR_n*
3/8	6	9/16	7 1/8	9/16	1 1/32	0.42						2.00	3.00
1/2	6	25/32	7 9/16	11/16	1 5/16	0.65	0.90	1.20				3.67	5.50
5/8	6	15/16	7 7/8	13/16	1 1/2	0.98	1.35	1.58	2.43			5.83	8.75
3/4	6	1 1/16	8 1/8	15/16	1 23/32	1.45	1.84	2.35	3.06	4.25		8.67	13.0
7/8	6	1 5/16	8 5/8	1 3/32	1 7/8	1.85		3.02	4.20	5.43		12.0	18.0
1	6	1 7/16	8 7/8	1 9/32	2 1/32	2.60		4.02	4.40	6.85	10.0	15.5	23.3
1 1/8	6	1 9/16	9 1/8	1 13/32	2 9/32	4.06		4.70	6.10			19.3	29.0
1 1/4	6	1 9/16	9 1/8	1 9/16	2 17/32	4.00		6.49	7.13	11.3	13.1	25.3	38.0
1 3/8	6	1 13/16	9 5/8	1 11/16	2 3/4	6.15						29.0	43.5
1 1/2	6	1 7/8	9 3/4	1 27/32	3 1/32	6.15		9.70	9.13	16.8	19.4	35.0	52.5
1 5/8	6	2 1/2	11	1 31/32	3 9/32	9.80						40.9	61.3
1 3/4	6	2 1/2	11	2 1/8	3 9/16	9.80		15.3	16.0	19.5		47.2	70.8
1 7/8	6	2 13/16	11 5/8	2 3/8	4	14.0		15.3				62.0	93.0
2	6	2 13/16	11 5/8	2 3/8	4	14.0		15.3		27.5		62.0	93.0
2 1/4	6	3 5/16	12 5/8	2 11/16	4 5/8	19.6		30.9		43.5		80.0	120
2 1/2	6	3 3/4	13 1/2	3	5	23.3		30.9		42.4		100	150
2 3/4	6	4 3/16	14 3/8	3 1/4	5 5/8	31.5				54.0		125	188
3	6	4 5/16	14 5/8	3 5/8	6 1/8	39.5						161	242
3 1/4	6	5 7/16	16 7/8	3 7/8	6 3/4	60.5		79.5				203	305
3 1/2	6	5 7/16	16 7/8	3 7/8	6 3/4	60.5	70.0	79.5				203	305
3 3/4	6	6	18	4 5/8	8 1/2	95.0						280	420
4	6	6	18	4 5/8	8 1/2	95.0						280	420
4 1/4	9	6 3/4	22 1/2	5 1/4	9 3/4		152					390	585
4 1/2	9	6 3/4	22 1/2	5 1/4	9 3/4		152					390	585
4 3/4	9	6 3/4	22 1/2	5 1/4	9 3/4		152					390	585
5	9	7 1/2	24	6	10		200					491	737

Notes:
Weights and dimensions of turnbuckles are typical; products of all suppliers are essentially similar. Users shall verify with the manufacturer that product meets strength specifications above.
* Tabulated available strengths are based on $\phi = 0.50$, $\Omega = 3.00$.

Table 15-7
Dimensions and Weights of Sleeve Nuts

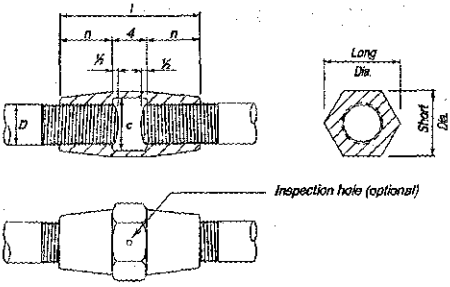

Thread: UNC and 4 UN Class 2B

Screw Dia., *D*, in.	Dimensions, in.					Weight, lb
	Short Dia.	Long Dia.	Length *l*	Nut *n*	Clear *c*	
3/8	11/16	25/32	4	—	—	0.27
7/16	25/32	7/8	4	—	—	0.34
1/2	7/8	1	4	—	—	0.43
9/16	15/16	1 1/16	5	—	—	0.64
5/8	1 1/16	1 7/32	5	—	—	0.93
3/4	1 1/4	1 7/16	5	—	—	1.12
7/8	1 7/16	1 5/8	7	1 7/16	1	1.75
1	1 5/8	1 13/16	7	1 7/16	1 1/8	2.46
1 1/8	1 13/16	2 1/16	7 1/2	1 5/8	1 1/4	3.10
1 1/4	2	2 1/4	7 1/2	1 5/8	1 3/8	4.04
1 3/8	2 3/16	2 1/2	8	1 7/8	1 1/2	4.97
1 1/2	2 3/8	2 11/16	8	1 7/8	1 5/8	6.16
1 5/8	2 9/16	2 15/16	8 1/2	2 1/16	1 3/4	7.36
1 3/4	2 3/4	3 1/8	8 1/2	2 1/16	1 7/8	8.87
1 7/8	2 15/16	3 5/16	9	2 5/16	2	10.4
2	3 1/8	3 1/2	9	2 5/16	2 1/8	12.2
2 1/4	3 1/2	3 15/16	9 1/2	2 1/2	2 3/8	16.2
2 1/2	3 7/8	4 3/8	10	2 3/4	2 5/8	21.1
2 3/4	4 1/4	4 13/16	10 1/2	2 15/16	2 7/8	26.7
3	4 5/8	5 1/4	11	3 3/16	3 1/8	33.2
3 1/4	5	5 5/8	11 1/2	3 3/8	3 3/8	40.6
3 1/2	5 3/8	6	12	3 5/8	3 5/8	49.1
3 3/4	5 3/4	6 3/8	12 1/2	3 13/16	3 7/8	58.6
4	6 1/8	6 7/8	13	4 1/16	4 1/8	69.2
4 1/4	6 1/2	7 1/2	13 1/2	4 3/4	4 3/8	75.0
4 1/2	6 7/8	7 15/16	14	5	4 3/4	90.0
4 3/4	7 1/4	8 3/8	14 1/2	5 1/4	5	98.0
5	7 5/8	8 7/8	15	5 1/2	5 1/4	110
5 1/4	8	9 1/4	15 1/2	5 3/4	5 1/2	122
5 1/2	8 3/8	9 3/4	16	6	5 3/4	142
5 3/4	8 3/4	10 1/8	16 1/2	6 1/4	6	157
6	9 1/8	10 5/8	17	6 1/2	6 1/4	176

Notes:
Weights and dimensions of sleeve nuts are typical; products of all suppliers are essentially similar. User shall verify with the manufacturer that strengths of sleeve nut are greater than the corresponding connecting rod when the same material is used.

Table 15-8
Dimensions and Weights of Recessed-Pin Nuts

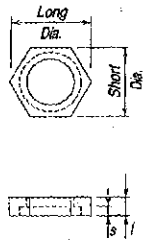

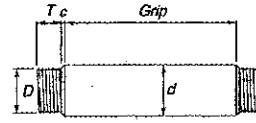

Material: Steel

Thread: 6 UN Class 2A/2B

Pin Dia. *d*, in.	Pin Dimensions, in.			Nut Dimensions, in.					Weight, lb
	Thread				Diameter		Recess		
	D	*T*	*c*	Thickness *t*	Short Dia.	Long Dia.	Rough Dia.	*s*	
2, 2 1/4	1 1/2	1	1/8	7/8	3	3 3/8	2 5/8	1/4	1
2 1/2, 2 3/4	2	1 1/8	1/8	1	3 5/8	4 1/8	3 1/8	1/4	2
3, 3 1/4, 3 1/2	2 1/2	1 1/4	1/8	1 1/8	4 3/8	5	3 7/8	3/8	3
3 3/4, 4	3	1 3/8	1/4	1 1/4	4 7/8	5 5/8	4 3/8	3/8	4
4 1/4, 4 1/2, 4 3/4	3 1/2	1 1/2	1/4	1 3/8	5 3/4	6 5/8	5 1/4	1/2	5
5, 5 1/4	4	1 5/8	1/4	1 1/2	6 1/4	7 1/4	5 3/4	1/2	6
5 1/2, 5 3/4, 6	4 1/2	1 3/4	1/4	1 5/8	7	8 1/8	6 1/2	5/8	8
6 1/4, 6 1/2	5	1 7/8	3/8	1 3/4	7 5/8	8 7/8	7	5/8	10
6 3/4, 7	5 1/2	2	3/8	1 7/8	8 1/8	9 3/8	7 1/2	3/4	12
7 1/4, 7 1/2	5 1/2	2	3/8	1 7/8	8 5/8	10	8	3/4	14
7 3/4, 8, 8 1/4	6	2 1/4	3/8	2 1/8	9 3/8	10 7/8	8 3/4	3/4	19
8 1/2, 8 3/4, 9	6	2 1/4	3/8	2 1/8	10 1/4	11 7/8	9 5/8	3/4	24
9 1/4, 9 1/2	6	2 3/8	3/8	2 1/4	11 1/4	13	10 5/8	3/4	32
9 3/4, 10	6	2 3/8	3/8	2 1/4	11 1/4	13	10 5/8	3/4	32

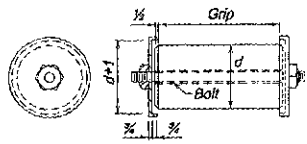

Typical Pin Cap Detail for Pins over 10 in. in dia.
Dimensions shown are approximate

Notes:
Although nuts may be used on all sizes of pins as shown above, a detail similar to that shown at the left is preferable for pin diameters over 10 in. In this detail, the pin is held in place by a recessed cap at each end and secured by a bolt passing completely through the caps and pin. Suitable provisions must be made for attaching pilots and driving nuts.

Table 15-9
Dimensions and Weights of Clevis and Cotter Pins

HORIZONTAL OR VERTICAL PIN

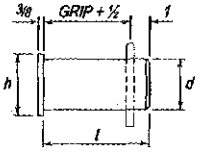

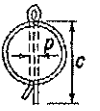

HORIZONTAL PIN

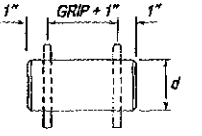

l = Length of pin, in.

Pin Diameter *d*, in.	Pins with Heads		Cotter		
	Head Diameter *h*, in.	Weight of One, lb	Length *c*, in.	Diameter *p*, in.	Weight per 100, lb
1 1/4	1 1/2	0.19 + 0.35*l*	2	1/4	2.64
1 1/2	1 3/4	0.26 + 0.50*l*	2 1/2	1/4	3.10
1 3/4	2	0.33 + 0.68*l*	2 3/4	1/4	3.50
2	2 3/8	0.47 + 0.89*l*	3	3/8	9.00
2 1/4	2 5/8	0.58 + 1.13*l*	3 1/4	3/8	9.40
2 1/2	2 7/8	0.70 + 1.39*l*	3 3/4	3/8	10.9
2 3/4	3 1/8	0.82 + 1.68*l*	4	3/8	11.4
3	3 1/2	1.02 + 2.00*l*	5	1/2	28.5
3 1/4	3 3/4	1.17 + 2.35*l*	5	1/2	28.5
3 1/2	4	1.34 + 2.73*l*	6	1/2	33.8
3 3/4	4 1/4	1.51 + 3.13*l*	6	1/2	33.8

PART 16

SPECIFICATIONS AND CODES

SPECIFICATION FOR STRUCTURAL STEEL BUILDINGS, JUNE 22, 2010 ..... 16.1–i
Preface 16.1–iii
Table of Contents 16.1–v
Symbols 16.1–xxvii
Glossary 16.1–xliii
Specification 16.1–1
Commentary 16.1–241
SPECIFICATION FOR STRUCTURAL JOINTS USING HIGH-STRENGTH BOLTS, DECEMBER 31, 2009 ..... 16.2–i
Preface 16.2–iii
Table of Contents 16.2–v
Symbols 16.2–vii
Glossary 16.2–ix
Specification and Commentary 16.2–1
References 16.2–80
CODE OF STANDARD PRACTICE FOR STEEL BUILDINGS AND BRIDGES, APRIL 14, 2010 ..... 16.3–i
Preface 16.3–iii
Table of Contents 16.3–v
Glossary 16.3–vii
Specification and Commentary 16.3–1

ANSI/AISC 360-10
An American National Standard

Specification for Structural Steel Buildings

June 22, 2010

Supersedes the
Specification for Structural Steel Buildings
dated March 9, 2005
and all previous versions of this specification

Approved by the AISC Committee on Specifications

AMERICAN INSTITUTE OF STEEL CONSTRUCTION
One East Wacker Drive, Suite 700
Chicago, Illinois 60601-1802

AISC © 2010

by

American Institute of Steel Construction

All rights reserved. This book or any part thereof must not be reproduced in any form without the written permission of the publisher.

The AISC logo is a registered trademark of AISC.

The information presented in this publication has been prepared in accordance with recognized engineering principles and is for general information only. While it is believed to be accurate, this information should not be used or relied upon for any specific application without competent professional examination and verification of its accuracy, suitability and applicability by a licensed professional engineer, designer or architect. The publication of the material contained herein is not intended as a representation or warranty on the part of the American Institute of Steel Construction or of any other person named herein, that this information is suitable for any general or particular use or of freedom from infringement of any patent or patents. Anyone making use of this information assumes all liability arising from such use.

Caution must be exercised when relying upon other specifications and codes developed by other bodies and incorporated by reference herein since such material may be modified or amended from time to time subsequent to the printing of this edition. The Institute bears no responsibility for such material other than to refer to it and incorporate it by reference at the time of the initial publication of this edition.

Printed in the United States of America

Second Printing: February 2012

PREFACE

(This Preface is not part of ANSI/AISC 360-10, *Specification for Structural Steel Buildings*, but is included for informational purposes only.)

This Specification is based upon past successful usage, advances in the state of knowledge, and changes in design practice. The 2010 American Institute of Steel Construction's *Specification for Structural Steel Buildings* provides an integrated treatment of allowable stress design (ASD) and load and resistance factor design (LRFD), and replaces earlier Specifications. As indicated in Chapter B of the Specification, designs can be made according to either ASD or LRFD provisions.

This Specification has been developed as a consensus document to provide a uniform practice in the design of steel-framed buildings and other structures. The intention is to provide design criteria for routine use and not to provide specific criteria for infrequently encountered problems, which occur in the full range of structural design.

This Specification is the result of the consensus deliberations of a committee of structural engineers with wide experience and high professional standing, representing a wide geographical distribution throughout the United States. The committee includes approximately equal numbers of engineers in private practice and code agencies, engineers involved in research and teaching, and engineers employed by steel fabricating and producing companies. The contributions and assistance of more than 50 additional professional volunteers working in ten task committees are also hereby acknowledged.

The Symbols, Glossary and Appendices to this Specification are an integral part of the Specification. A non-mandatory Commentary has been prepared to provide background for the Specification provisions and the user is encouraged to consult it. Additionally, non-mandatory User Notes are interspersed throughout the Specification to provide concise and practical guidance in the application of the provisions.

The reader is cautioned that professional judgment must be exercised when data or recommendations in the Specification are applied, as described more fully in the disclaimer notice preceding this Preface.

This Specification was approved by the Committee on Specifications:

James M. Fisher, Chairman
Edward E. Garvin, Vice Chairman
Hansraj G. Ashar
William F. Baker
John M. Barsom
William D. Bast
Reidar Bjorhovde
Roger L. Brockenbrough
Gregory G. Deierlein
Bruce R. Ellingwood
Michael D. Engelhardt
Shu-Jin Fang
Steven J. Fenves
John W. Fisher
Theodore V. Galambos
Louis F. Geschwindner
Lawrence G. Griffis
John L. Gross
Jerome F. Hajjar
Patrick M. Hassett
Tony C. Hazel
Mark V. Holland
Ronald J. Janowiak
Richard C. Kaehler
Lawrence A. Kloiber
Lawrence F. Kruth
Jay W. Larson
Roberto T. Leon
James O. Malley
Sanjeev R. Malushte

David L. McKenzie
Duane K. Miller
Larry S. Muir
Thomas M. Murray
R. Shankar Nair
Jack E. Petersen
Douglas A. Rees-Evans
Thomas A. Sabol
Robert E. Shaw, Jr.
Donald R. Sherman
W. Lee Shoemaker
William A. Thornton
Raymond H. R. Tide
Chia-Ming Uang
Donald W. White
Cynthia J. Duncan, Secretary

The Committee gratefully acknowledges the following task committee members and staff for their contribution to this document:

Allen Adams
Farid Alfawakhiri
Susan Burmeister
Bruce M. Butler
Charles J. Carter
Helen Chen
Bernard Cvijanovic
Robert Disque
Carol Drucker
W. Samuel Easterling
Duane Ellifritt
Marshall T. Ferrell
Christopher M. Foley
Steven Freed
Fernando Frias
Nancy Gavlin
Amanuel Gebremeskel
Rodney D. Gibble
Subhash Goel
Arvind Goverdhan
Kurt Gustafson
Tom Harrington
Todd Helwig
Richard Henige
Stephen Herlache
Steve Herth
Keith Hjelmstad
Nestor Iwankiw
William P. Jacobs, V
Matthew Johann
Daniel Kaufman
Keith Landwehr
Barbara Lane
Michael Lederle
Roberto Leon
Andres Lepage
Brent Leu
J. Walter Lewis
William Lindley
Stanley Lindsey
LeRoy Lutz
Bonnie Manley
Peter Marshall
Margaret Matthew
Curtis L. Mayes
William McGuire
Saul Mednick
James Milke
Heath Mitchell
Patrick Newman
Jeffrey Packer
Frederick Palmer
Dhiren Panda
Teoman Pekoz
Clarkson Pinkham
Thomas Poulos
Christopher Raebel
Thomas D. Reed
Clinton Rex
Benjamin Schafer
Thomas Schlafly
Monica Stockmann
James Swanson
Steven J. Thomas
Emile Troup
Brian Uy
Amit H. Varma
Sriramulu Vinnakota
Ralph Vosters
Robert Weber
Michael A. West
Ronald D. Ziemian

TABLE OF CONTENTS

SYMBOLS xxvii

GLOSSARY xliii

SPECIFICATION

A. GENERAL PROVISIONS 1
A1. Scope 1
1. Seismic Applications 2
2. Nuclear Applications 2
A2. Referenced Specifications, Codes and Standards 2
A3. Material 6
1. Structural Steel Materials 6
1a. ASTM Designations 6
1b. Unidentified Steel 7
1c. Rolled Heavy Shapes 7
1d. Built-Up Heavy Shapes 7
2. Steel Castings and Forgings 8
3. Bolts, Washers and Nuts 8
4. Anchor Rods and Threaded Rods 8
5. Consumables for Welding 9
6. Headed Stud Anchors 9
A4. Structural Design Drawings and Specifications 9

B. DESIGN REQUIREMENTS 10
B1. General Provisions 10
B2. Loads and Load Combinations 10
B3. Design Basis 10
1. Required Strength 10
2. Limit States 11
3. Design for Strength Using Load and Resistance Factor Design (LRFD) 11
4. Design for Strength Using Allowable Strength Design (ASD) 11
5. Design for Stability 12
6. Design of Connections 12
6a. Simple Connections 12
6b. Moment Connections 12
7. Moment Redistribution in Beams 12
8. Diaphragms and Collectors 13
9. Design for Serviceability 13
10. Design for Ponding 13
11. Design for Fatigue 13
12. Design for Fire Conditions 13

13. Design for Corrosion Effects 14
14. Anchorage to Concrete 14
B4. Member Properties 14
1. Classification of Sections for Local Buckling 14
1a. Unstiffened Elements 14
1b. Stiffened Elements 15
2. Design Wall Thickness for HSS 15
3. Gross and Net Area Determination 18
3a. Gross Area 18
3b. Net Area 18
B5. Fabrication and Erection 19
B6. Quality Control and Quality Assurance 19
B7. Evaluation of Existing Structures 19

C. DESIGN FOR STABILITY 20
C1. General Stability Requirements 20
1. Direct Analysis Method of Design 20
2. Alternative Methods of Design 20
C2. Calculation of Required Strengths 21
1. General Analysis Requirements 21
2. Consideration of Initial Imperfections 22
2a. Direct Modeling of Imperfections 22
2b. Use of Notional Loads to Represent Imperfections 22
3. Adjustments to Stiffness 24
C3. Calculation of Available Strengths 25

D. DESIGN OF MEMBERS FOR TENSION 26
D1. Slenderness Limitations 26
D2. Tensile Strength 26
D3. Effective Net Area 27
D4. Built-Up Members 27
D5. Pin-Connected Members 29
1. Tensile Strength 29
2. Dimensional Requirements 29
D6. Eyebars 29
1. Tensile Strength 29
2. Dimensional Requirements 30

E. DESIGN OF MEMBERS FOR COMPRESSION 31
E1. General Provisions 31
E2. Effective Length 33
E3. Flexural Buckling of Members without Slender Elements 33
E4. Torsional and Flexural-Torsional Buckling of Members Without Slender Elements 34
E5. Single Angle Compression Members 36

E6. Built-Up Members 37
1. Compressive Strength 37
2. Dimensional Requirements 38
E7. Members with Slender Elements 40
1. Slender Unstiffened Elements, Q_s 40
2. Slender Stiffened Elements, Q_a 43

F. DESIGN OF MEMBERS FOR FLEXURE 44
F1. General Provisions 46
F2. Doubly Symmetric Compact I-Shaped Members and Channels Bent About Their Major Axis 47
1. Yielding 47
2. Lateral-Torsional Buckling 47
F3. Doubly Symmetric I-Shaped Members With Compact Webs and Noncompact or Slender Flanges Bent About Their Major Axis 49
1. Lateral-Torsional Buckling 49
2. Compression Flange Local Buckling 49
F4. Other I-Shaped Members With Compact or Noncompact Webs Bent About Their Major Axis 49
1. Compression Flange Yielding 50
2. Lateral-Torsional Buckling 50
3. Compression Flange Local Buckling 52
4. Tension Flange Yielding 53
F5. Doubly Symmetric and Singly Symmetric I-Shaped Members With Slender Webs Bent About Their Major Axis 54
1. Compression Flange Yielding 54
2. Lateral-Torsional Buckling 54
3. Compression Flange Local Buckling 55
4. Tension Flange Yielding 55
F6. I-Shaped Members and Channels Bent About Their Minor Axis 55
1. Yielding 55
2. Flange Local Buckling 55
F7. Square and Rectangular HSS and Box-Shaped Members 56
1. Yielding 56
2. Flange Local Buckling 57
3. Web Local Buckling 57
F8. Round HSS 57
1. Yielding 57
2. Local Buckling 57
F9. Tees and Double Angles Loaded in the Plane of Symmetry 58
1. Yielding 58
2. Lateral-Torsional Buckling 58
3. Flange Local Buckling of Tees 58
4. Local Buckling of Tee Stems in Flexural Compression 59

F10. Single Angles 60
1. Yielding 60
2. Lateral-Torsional Buckling 60
3. Leg Local Buckling 62
F11. Rectangular Bars and Rounds 62
1. Yielding 63
2. Lateral-Torsional Buckling 63
F12. Unsymmetrical Shapes 63
1. Yielding 63
2. Lateral-Torsional Buckling 64
3. Local Buckling 64
F13. Proportions of Beams and Girders 64
1. Strength Reductions for Members With Holes in the Tension Flange 64
2. Proportioning Limits for I-Shaped Members 64
3. Cover Plates 65
4. Built-Up Beams 66
5. Unbraced Length for Moment Redistribution 66

G. DESIGN OF MEMBERS FOR SHEAR 67
G1. General Provisions 67
G2. Members With Unstiffened or Stiffened Webs 67
1. Shear Strength 67
2. Transverse Stiffeners 69
G3. Tension Field Action 70
1. Limits on the Use of Tension Field Action 70
2. Shear Strength With Tension Field Action 70
3. Transverse Stiffeners 70
G4. Single Angles 71
G5. Rectangular HSS and Box-Shaped Members 71
G6. Round HSS 72
G7. Weak Axis Shear in Doubly Symmetric and Singly Symmetric Shapes 72
G8. Beams and Girders with Web Openings 72

H. DESIGN OF MEMBERS FOR COMBINED FORCES AND TORSION 73
H1. Doubly and Singly Symmetric Members Subject to Flexure and Axial Force 73
1. Doubly and Singly Symmetric Members Subject to Flexure and Compression 73
2. Doubly and Singly Symmetric Members Subject to Flexure and Tension 74
3. Doubly Symmetric Rolled Compact Members Subject to Single Axis Flexure and Compression 75

H2. Unsymmetric and Other Members Subject to Flexure and Axial Force . . . 76
H3. Members Subject to Torsion and Combined Torsion, Flexure, Shear and/or Axial force . . . 77
1. Round and Rectangular HSS Subject to Torsion . . . 77
2. HSS Subject to Combined Torsion, Shear, Flexure and Axial Force . . . 78
3. Non-HSS Members Subject to Torsion and Combined Stress . . . 79
H4. Rupture of Flanges With Holes Subject to Tension . . . 79

I. DESIGN OF COMPOSITE MEMBERS . . . 81
I1. General Provisions . . . 81
1. Concrete and Steel Reinforcement . . . 81
2. Nominal Strength of Composite Sections . . . 82
2a. Plastic Stress Distribution Method . . . 82
2b. Strain Compatibility Method . . . 82
3. Material Limitations . . . 82
4. Classification of Filled Composite Sections for Local Buckling . . . 83
I2. Axial Force . . . 85
1. Encased Composite Members . . . 85
1a. Limitations . . . 85
1b. Compressive Strength . . . 85
1c. Tensile Strength . . . 86
1d. Load Transfer . . . 86
1e. Detailing Requirements . . . 87
2. Filled Composite Members . . . 87
2a. Limitations . . . 87
2b. Compressive Strength . . . 87
2c. Tensile Strength . . . 88
2d. Load Transfer . . . 88
I3. Flexure . . . 88
1. General . . . 88
1a. Effective Width . . . 88
1b. Strength During Construction . . . 89
2. Composite Beams With Steel Headed Stud or Steel Channel Anchors . . . 89
2a. Positive Flexural Strength . . . 89
2b. Negative Flexural Strength . . . 89
2c. Composite Beams With Formed Steel Deck . . . 90
2d. Load Transfer Between Steel Beam and Concrete Slab . . . 90
3. Encased Composite Members . . . 91
4. Filled Composite Members . . . 92
4a. Limitations . . . 92
4b. Flexural Strength . . . 92

I4. Shear . . . 93
1. Filled and Encased Composite Members . . . 93
2. Composite Beams With Formed Steel Deck . . . 93
I5. Combined Flexure and Axial Force . . . 93
I6. Load Transfer . . . 93
1. General Requirements . . . 93
2. Force Allocation . . . 94
2a. External Force Applied to Steel Section . . . 94
2b. External Force Applied to Concrete . . . 94
2c. External Force Applied Concurrently to Steel and Concrete . . . 94
3. Force Transfer Mechanisms . . . 95
3a. Direct Bearing . . . 95
3b. Shear Connection . . . 95
3c. Direct Bond Interaction . . . 95
4. Detailing Requirements . . . 96
4a. Encased Composite Members . . . 96
4b. Filled Composite Members . . . 96
I7. Composite Diaphragms and Collector Beams . . . 96
I8. Steel Anchors . . . 97
1. General . . . 97
2. Steel Anchors in Composite Beams . . . 97
2a. Strength of Steel Headed Stud Anchors . . . 97
2b. Strength of Steel Channel Anchors . . . 99
2c. Required Number of Steel Anchors . . . 99
2d. Detailing Requirements . . . 99
3. Steel Anchors in Composite Components . . . 100
3a. Shear Strength of Steel Headed Stud Anchors in Composite Components . . . 101
3b. Tensile Strength of Steel Headed Stud Anchors in Composite Components . . . 102
3c. Strength of Steel Headed Stud Anchors for Interaction of Shear and Tension in Composite Components . . . 102
3d. Shear Strength of Steel Channel Anchors in Composite Components . . . 104
3e. Detailing Requirements in Composite Components . . . 104
I9. Special Cases . . . 104

J. DESIGN OF CONNECTIONS . . . 105
J1. General Provisions . . . 105
1. Design Basis . . . 105
2. Simple Connections . . . 105
3. Moment Connections . . . 106
4. Compression Members With Bearing Joints . . . 106
5. Splices in Heavy Sections . . . 106

6. Weld Access Holes . . . 107
7. Placement of Welds and Bolts . . . 107
8. Bolts in Combination With Welds . . . 107
9. High-Strength Bolts in Combination With Rivets . . . 108
10. Limitations on Bolted and Welded Connections . . . 108
J2. Welds . . . 108
1. Groove Welds . . . 108
1a. Effective Area . . . 108
1b. Limitations . . . 110
2. Fillet Welds . . . 110
2a. Effective Area . . . 110
2b. Limitations . . . 111
3. Plug and Slot Welds . . . 113
3a. Effective Area . . . 113
3b. Limitations . . . 113
4. Strength . . . 113
5. Combination of Welds . . . 117
6. Filler Metal Requirements . . . 117
7. Mixed Weld Metal . . . 118
J3. Bolts and Threaded Parts . . . 118
1. High-Strength Bolts . . . 118
2. Size and Use of Holes . . . 120
3. Minimum Spacing . . . 122
4. Minimum Edge Distance . . . 122
5. Maximum Spacing and Edge Distance . . . 122
6. Tensile and Shear Strength of Bolts and Threaded Parts . . . 125
7. Combined Tension and Shear in Bearing-Type Connections . . . 125
8. High-Strength Bolts in Slip-Critical Connections . . . 126
9. Combined Tension and Shear in Slip-Critical Connections . . . 127
10. Bearing Strength at Bolt Holes . . . 127
11. Special Fasteners . . . 128
12. Tension Fasteners . . . 128
J4. Affected Elements of Members and Connecting Elements . . . 128
1. Strength of Elements in Tension . . . 128
2. Strength of Elements in Shear . . . 129
3. Block Shear Strength . . . 129
4. Strength of Elements in Compression . . . 129
5. Strength of Elements in Flexure . . . 130
J5. Fillers . . . 130
1. Fillers in Welded Connections . . . 130
1a. Thin Fillers . . . 130
1b. Thick Fillers . . . 130
2. Fillers in Bolted Connections . . . 130

J6. Splices . . . 131
J7. Bearing Strength . . . 131
J8. Column Bases and Bearing on Concrete . . . 132
J9. Anchor Rods and Embedments . . . 132
J10. Flanges and Webs with Concentrated Forces . . . 133
1. Flange Local Bending . . . 133
2. Web Local Yielding . . . 134
3. Web Local Crippling . . . 134
4. Web Sidesway Buckling . . . 135
5. Web Compression Buckling . . . 136
6. Web Panel Zone Shear . . . 136
7. Unframed Ends of Beams and Girders . . . 138
8. Additional Stiffener Requirements for Concentrated Forces . . . 138
9. Additional Doubler Plate Requirements for Concentrated Forces . . . 138

K. DESIGN OF HSS AND BOX MEMBER CONNECTIONS . . . 140
K1. Concentrated Forces on HSS . . . 140
1. Definitions of Parameters . . . 140
2. Round HSS . . . 141
3. Rectangular HSS . . . 141
K2. HSS-to-HSS Truss Connections . . . 141
1. Definitions of Parameters . . . 146
2. Round HSS . . . 147
3. Rectangular HSS . . . 147
K3. HSS-to-HSS Moment Connections . . . 147
1. Definitions of Parameters . . . 154
2. Round HSS . . . 154
3. Rectangular HSS . . . 154
K4. Welds of Plates and Branches to Rectangular HSS . . . 154

L. DESIGN FOR SERVICEABILITY . . . 163
L1. General Provisions . . . 163
L2. Camber . . . 163
L3. Deflections . . . 163
L4. Drift . . . 164
L5. Vibration . . . 164
L6. Wind-Induced Motion . . . 164
L7. Expansion and Contraction . . . 164
L8. Connection Slip . . . 164

M. FABRICATION AND ERECTION . . . 165
M1. Shop and Erection Drawings . . . 165
M2. Fabrication . . . 165
1. Cambering, Curving and Straightening . . . 165
2. Thermal Cutting . . . 165

3. Planing of Edges . . . 166
4. Welded Construction . . . 166
5. Bolted Construction . . . 166
6. Compression Joints . . . 167
7. Dimensional Tolerances . . . 167
8. Finish of Column Bases . . . 167
9. Holes for Anchor Rods . . . 167
10. Drain Holes . . . 167
11. Requirements for Galvanized Members . . . 168
M3. Shop Painting . . . 168
1. General Requirements . . . 168
2. Inaccessible Surfaces . . . 168
3. Contact Surfaces . . . 168
4. Finished Surfaces . . . 168
5. Surfaces Adjacent to Field Welds . . . 168
M4. Erection . . . 168
1. Column Base Setting . . . 168
2. Stability and Connections . . . 169
3. Alignment . . . 169
4. Fit of Column Compression Joints and Base Plates . . . 169
5. Field Welding . . . 169
6. Field Painting . . . 169

N. QUALITY CONTROL AND QUALITY ASSURANCE . . . 170
N1. Scope . . . 170
N2. Fabricator and Erector Quality Control Program . . . 171
N3. Fabricator and Erector Documents . . . 171
1. Submittals for Steel Construction . . . 171
2. Available Documents for Steel Construction . . . 171
N4. Inspection and Nondestructive Testing Personnel . . . 172
1. Quality Control Inspector Qualifications . . . 172
2. Quality Assurance Inspector Qualifications . . . 173
3. NDT Personnel Qualifications . . . 173
N5. Minimum Requirements for Inspection of Structural Steel Buildings . . . 173
1. Quality Control . . . 173
2. Quality Assurance . . . 174
3. Coordinated Inspection . . . 174
4. Inspection of Welding . . . 174
5. Nondestructive Testing of Welded Joints . . . 177
5a. Procedures . . . 177
5b. CJP Groove Weld NDT . . . 177
5c. Access Hole NDT . . . 178
5d. Welded Joints Subjected to Fatigue . . . 178
5e. Reduction of Rate of Ultrasonic Testing . . . 178

5f. Increase in Rate of Ultrasonic Testing . . . 178
5g. Documentation . . . 179
6. Inspection of High-Strength Bolting . . . 179
7. Other Inspection Tasks . . . 181
N6. Minimum Requirements for Inspection of Composite Construction . . . 181
N7. Approved Fabricators and Erectors . . . 182
N8. Nonconforming Material and Workmanship . . . 182

APPENDIX 1. DESIGN BY INELASTIC ANALYSIS . . . 183
1.1. General Requirements . . . 183
1.2. Ductility Requirements . . . 184
1. Material . . . 184
2. Cross Section . . . 184
3. Unbraced Length . . . 185
4. Axial Force . . . 186
1.3. Analysis Requirements . . . 186
1. Material Properties and Yield Criteria . . . 186
2. Geometric Imperfections . . . 187
3. Residual Stress and Partial Yielding Effects . . . 187

APPENDIX 2. DESIGN FOR PONDING . . . 188
2.1. Simplified Design for Ponding . . . 188
2.2. Improved Design for Ponding . . . 189

APPENDIX 3. DESIGN FOR FATIGUE . . . 192
3.1. General Provisions . . . 192
3.2. Calculation of Maximum Stresses and Stress Ranges . . . 193
3.3. Plain Material and Welded Joints . . . 193
3.4. Bolts and Threaded Parts . . . 196
3.5. Special Fabrication and Erection Requirements . . . 197

APPENDIX 4. STRUCTURAL DESIGN FOR FIRE CONDITIONS . . . 214
4.1. General Provisions . . . 214
4.1.1. Performance Objective . . . 214
4.1.2. Design by Engineering Analysis . . . 214
4.1.3. Design by Qualification Testing . . . 215
4.1.4. Load Combinations and Required Strength . . . 215
4.2. Structural Design for Fire Conditions by Analysis . . . 215
4.2.1. Design-Basis Fire . . . 215
4.2.1.1. Localized Fire . . . 215
4.2.1.2. Post-Flashover Compartment Fires . . . 216
4.2.1.3. Exterior Fires . . . 216
4.2.1.4. Active Fire Protection Systems . . . 216
4.2.2. Temperatures in Structural Systems under Fire Conditions . . . 216
4.2.3. Material Strengths at Elevated Temperatures . . . 216

4.2.3.1. Thermal Elongation 216
4.2.3.2. Mechanical Properties at Elevated Temperatures 217
4.2.4. Structural Design Requirements 218
4.2.4.1. General Structural Integrity 218
4.2.4.2. Strength Requirements and Deformation Limits 218
4.2.4.3. Methods of Analysis 219
4.2.4.3a. Advanced Methods of Analysis 219
4.2.4.3b. Simple Methods of Analysis 219
4.2.4.4. Design Strength 221
4.3. Design by Qualification Testing 221
4.3.1. Qualification Standards 221
4.3.2. Restrained Construction 222
4.3.3. Unrestrained Construction 222

APPENDIX 5. EVALUATION OF EXISTING STRUCTURES 223
5.1. General Provisions 223
5.2. Material Properties 223
1. Determination of Required Tests 223
2. Tensile Properties 223
3. Chemical Composition 224
4. Base Metal Notch Toughness 224
5. Weld Metal 224
6. Bolts and Rivets 224
5.3. Evaluation by Structural Analysis 224
1. Dimensional Data 224
2. Strength Evaluation 225
3. Serviceability Evaluation 225
5.4. Evaluation by Load Tests 225
1. Determination of Load Rating by Testing 225
2. Serviceability Evaluation 226
5.5. Evaluation Report 226

APPENDIX 6. STABILITY BRACING FOR COLUMNS AND BEAMS 227
6.1. General Provisions 227
6.2. Column Bracing 228
1. Relative Bracing 228
2. Nodal Bracing 228
6.3. Beam Bracing 229
1. Lateral Bracing 229
1a. Relative Bracing 229
1b. Nodal Bracing 230
2. Torsional Bracing 230
2a. Nodal Bracing 230
2b. Continuous Bracing 231

6.4 Beam-Column Bracing 232

APPENDIX 7. ALTERNATIVE METHODS OF DESIGN FOR STABILITY 233
7.1. General Stability Requirements 233
7.2. Effective Length Method 233
1. Limitations 233
2. Required Strengths 233
3. Available Strengths 234
7.3 First-Order Analysis Method 235
1. Limitations 235
2. Required Strengths 235
3. Available Strengths 235

APPENDIX 8. APPROXIMATE SECOND-ORDER ANALYSIS 237
8.1. Limitations 237
8.2. Calculation Procedure 237
1. Multiplier B_1 for P-δ Effects 238
2. Multiplier B_2 for P-Δ Effects 239

COMMENTARY

INTRODUCTION 241

COMMENTARY SYMBOLS 242

COMMENTARY GLOSSARY 244

A. GENERAL PROVISIONS 246
A1. Scope 246
A2. Referenced Specifications, Codes and Standards 247
A3. Material 247
1. Structural Steel Materials 247
1a. ASTM Designations 247
1c. Rolled Heavy Shapes 250
2. Steel Castings and Forgings 251
3. Bolts, Washers and Nuts 251
4. Anchor Rods and Threaded Rods 251
5. Consumables for Welding 251
A4. Structural Design Drawings and Specifications 252

B. DESIGN REQUIREMENTS 253
B1. General Provisions 253
B2. Loads and Load Combinations 254
B3. Design Basis 256
1. Required Strength 257
2. Limit States 257

3. Design for Strength Using Load and Resistance Factor Design (LRFD) . . . 258
4. Design for Strength Using Allowable Strength Design (ASD) . . . 260
5. Design for Stability . . . 262
6. Design of Connections . . . 262
7. Moment Redistribution in Beams . . . 266
8. Diaphragms and Collectors . . . 266
10. Design for Ponding . . . 267
12. Design for Fire Conditions . . . 267
13. Design for Corrosion Effects . . . 267
B4. Member Properties . . . 268
1. Classifications of Sections for Local Buckling . . . 268
2. Design Wall Thickness for HSS . . . 271
3. Gross and Net Area Determination . . . 271
3a. Gross Area . . . 271
3b. Net Area . . . 271

C. DESIGN FOR STABILITY . . . 272
C1. General Stability Requirements . . . 272
C2. Calculation of Required Strengths . . . 273
1. General Analysis Requirements . . . 274
2. Consideration of Initial Imperfections . . . 279
3. Adjustments to Stiffness . . . 279
C3. Calculation of Available Strengths . . . 281

D. DESIGN OF MEMBERS FOR TENSION . . . 282
D1. Slenderness Limitations . . . 282
D2. Tensile Strength . . . 282
D3. Effective Net Area . . . 282
D4. Built-Up Members . . . 287
D5. Pin-Connected Members . . . 287
1. Tensile Strength . . . 287
2. Dimensional Requirements . . . 287
D6. Eyebars . . . 288
1. Tensile Strength . . . 288
2. Dimensional Requirements . . . 288

E. DESIGN OF MEMBERS FOR COMPRESSION . . . 290
E1. General Provisions . . . 290
E2. Effective Length . . . 292
E3. Flexural Buckling of Members Without Slender Elements . . . 292
E4. Torsional and Flexural-Torsional Buckling of Members Without Slender Elements . . . 294
E5. Single Angle Compression Members . . . 296
E6. Built-Up Members . . . 297

1. Compressive Strength 297
2. Dimensional Requirements 297
E7. Members with Slender Elements 298
1. Slender Unstiffened Elements, Q_s 299
2. Slender Stiffened Elements, Q_a 300

F. DESIGN OF MEMBERS FOR FLEXURE 302
F1. General Provisions 302
F2. Doubly Symmetric Compact I-Shaped Members and Channels Bent About Their Major Axis 308
F3. Doubly Symmetric I-Shaped Members With Compact Webs and Noncompact or Slender Flanges Bent About Their Major Axis 310
F4. Other I-Shaped Members with Compact or Noncompact Webs Bent About Their Major Axis 310
F5. Doubly Symmetric and Singly Symmetric I-Shaped Members with Slender Webs Bent About Their Major Axis 312
F6. I-Shaped Members and Channels Bent About Their Minor Axis 312
F7. Square and Rectangular HSS and Box-Shaped Members 312
F8. Round HSS 314
F9. Tees and Double Angles Loaded in the Plane of Symmetry 314
F10. Single Angles 317
1. Yielding 318
2. Lateral-Torsional Buckling 318
3. Leg Local Buckling 321
F11. Rectangular Bars and Rounds 322
F12. Unsymmetrical Shapes 323
F13. Proportions of Beams and Girders 323
1. Strength Reductions for Members With Holes in the Tension Flange 323
2. Proportioning Limits for I-Shaped Members 323
3. Cover Plates 324
5. Unbraced Length for Moment Redistribution 324

G. DESIGN OF MEMBERS FOR SHEAR 325
G1. General Provisions 325
G2. Members With Unstiffened or Stiffened Webs 325
1. Shear Strength 325
2. Transverse Stiffeners 327
G3. Tension Field Action 327
1. Limits on the Use of Tension Field Action 327
2. Shear Strength With Tension Field Action 328
3. Transverse Stiffeners 328
G4. Single Angles 328
G5. Rectangular HSS and Box-Shaped Members 329

G6. Round HSS . . . 330
G7. Weak Axis Shear in Doubly and Singly Symmetric Shapes . . . 330
G8. Beams and Girders with Web Openings . . . 330

H. DESIGN OF MEMBERS FOR COMBINED FORCES AND TORSION . . . 331
H1. Doubly and Singly Symmetric Members Subject to Flexure and Axial Force . . . 331
1. Doubly and Singly Symmetric Members Subject to Flexure and Compression . . . 331
2. Doubly and Singly Symmetric Members in Flexure and Tension . . . 335
3. Doubly Symmetric Rolled Compact Members Subject to Single Axis Flexure and Compression . . . 335
H2. Unsymmetric and Other Members Subject to Flexure and Axial Force . . . 338
H3. Members Subject to Torsion and Combined Torsion, Flexure, Shear and/or Axial Force . . . 341
1. Round and Rectangular HSS Subject to Torsion . . . 341
2. HSS Subject to Combined Torsion, Shear, Flexure and Axial Force . . 342
3. Non-HSS Members Subject to Torsion and Combined Stress . . . 343
H4. Rupture of Flanges With Holes Subject to Tension . . . 343

I. DESIGN OF COMPOSITE MEMBERS . . . 344
I1. General Provisions . . . 345
1. Concrete and Steel Reinforcement . . . 345
2. Nominal Strength of Composite Sections . . . 346
2a. Plastic Stress Distribution Method . . . 346
2b. Strain-Compatibility Aproach . . . 347
3. Material Limitations . . . 347
4. Classification of Filled Composite Sections for Local Buckling . . . 348
I2. Axial Force . . . 349
1. Encased Composite Members . . . 350
1a. Limitations . . . 350
1b. Compressive Strength . . . 350
1c. Tensile Strength . . . 351
2. Filled Composite Members . . . 351
2a. Limitations . . . 351
2b. Compressive Strength . . . 351
2c. Tensile Strength . . . 352
I3. Flexure . . . 352
1. General . . . 352
1a. Effective Width . . . 353
1b. Strength During Construction . . . 353
2. Composite Beams With Steel Headed Stud or Steel Channel Anchors . . . 353

2a. Positive Flexural Strength . . . 357
2b. Negative Flexural Strength . . . 359
2c. Composite Beams With Formed Steel Deck . . . 360
2d. Load Transfer Between Steel Beam and Concrete Slab . . . 360
3. Encased Composite Members . . . 362
4. Filled Composite Members . . . 363
I4. Shear . . . 365
1. Filled and Encased Composite Members . . . 365
2. Composite Beams With Formed Steel Deck . . . 365
I5. Combined Flexure and Axial Force . . . 365
I6. Load Transfer . . . 370
1. General Requirements . . . 370
2. Force Allocation . . . 370
3. Force Transfer Mechanisms . . . 371
3a. Direct Bearing . . . 371
3b. Shear Connection . . . 372
3c. Direct Bond Interaction . . . 372
4. Detailing Requirements . . . 372
I7. Composite Diaphragms and Collector Beams . . . 374
I8. Steel Anchors . . . 376
1. General . . . 376
2. Steel Anchors in Composite Beams . . . 377
2a. Strength of Steel Headed Stud Anchors . . . 377
2b. Strength of Steel Channel Anchors . . . 379
2d. Detailing Requirements . . . 380
3. Steel Anchors in Composite Components . . . 380
I9. Special Cases . . . 382

J. DESIGN OF CONNECTIONS . . . 383
J1. General Provisions . . . 383
1. Design Basis . . . 383
2. Simple Connections . . . 383
3. Moment Connections . . . 383
4. Compression Members With Bearing Joints . . . 384
5. Splices in Heavy Sections . . . 384
6. Weld Access Holes . . . 386
7. Placement of Welds and Bolts . . . 387
8. Bolts in Combination With Welds . . . 388
9. High-Strength Bolts in Combination With Rivets . . . 388
10. Limitations on Bolted and Welded Connections . . . 388
J2. Welds . . . 388
1. Groove Welds . . . 389
1a. Effective Area . . . 389

1b. Limitations . . . 389
2. Fillet Welds . . . 389
2a. Effective Area . . . 389
2b. Limitations . . . 389
3. Plug and Slot Welds . . . 395
3a. Effective Area . . . 395
3b. Limitations . . . 395
4. Strength . . . 396
5. Combination of Welds . . . 400
6. Filler Metal Requirements . . . 400
7. Mixed Weld Metal . . . 400
J3. Bolts and Threaded Parts . . . 400
1. High-Strength Bolts . . . 400
2. Size and Use of Holes . . . 401
3. Minimum Spacing . . . 402
4. Minimum Edge Distance . . . 402
5. Maximum Spacing and Edge Distance . . . 402
6. Tension and Shear Strength of Bolts and Threaded Parts . . . 402
7. Combined Tension and Shear in Bearing-Type Connections . . . 404
8. High-Strength Bolts in Slip-Critical Connections . . . 406
9. Combined Tension and Shear in Slip-Critical Connections . . . 410
10. Bearing Strength at Bolt Holes . . . 410
12. Tension Fasteners . . . 411
J4. Affected Elements of Members and Connecting Elements . . . 411
1. Strength of Elements in Tension . . . 411
2. Strength of Elements in Shear . . . 411
3. Block Shear Strength . . . 411
4. Strength of Elements in Compression . . . 413
J5. Fillers . . . 413
J7. Bearing Strength . . . 413
J8. Column Bases and Bearing on Concrete . . . 414
J9. Anchor Rods and Embedments . . . 414
J10. Flanges and Webs with Concentrated Forces . . . 415
1. Flange Local Bending . . . 416
2. Web Local Yielding . . . 417
3. Web Local Crippling . . . 417
4. Web Sidesway Buckling . . . 418
5. Web Compression Buckling . . . 418
6. Web Panel-Zone Shear . . . 419
7. Unframed Ends of Beams and Girders . . . 421
8. Additional Stiffener Requirements for Concentrated Forces . . . 422
9. Additional Doubler Plate Requirements for Concentrated Forces . . . 423

K. DESIGN OF HSS AND BOX MEMBER CONNECTIONS 425
K1. Concentrated Forces on HSS 425
1. Definitions of Parameters 425
2. Round HSS 425
3. Rectangular HSS 425
K2. HSS-to-HSS Truss Connections 428
1. Definitions of Parameters 431
2. Round HSS 431
3. Rectangular HSS 433
K3. HSS-to-HSS Moment Connections 436
K4. Welds of Plates and Branches to Rectangular HSS 437

L. DESIGN FOR SERVICEABILITY 439
L1. General Provisions 439
L2. Camber 440
L3. Deflections 440
L4. Drift 441
L5. Vibration 442
L6. Wind-Induced Motion 443
L7. Expansion and Contraction 444
L8. Connection Slip 444

M. FABRICATION AND ERECTION 445
M1. Shop and Erection Drawings 445
M2. Fabrication 445
1. Cambering, Curving and Straightening 445
2. Thermal Cutting 445
4. Welded Construction 446
5. Bolted Construction 446
10. Drain Holes 446
11. Requirements for Galvanized Members 447
M3. Shop Painting 448
1. General Requirements 448
3. Contact Surfaces 448
5. Surfaces Adjacent to Field Welds 448
M4. Erection 448
2. Stability and Connections 448
4. Fit of Column Compression Joints and Base Plates 448
5. Field Welding 449

N. QUALITY CONTROL AND QUALITY ASSURANCE 450
N1. Scope 450
N2. Fabricator and Erector Quality Control Program 451
N3. Fabricator and Erector Documents 452
1. Submittals for Steel Construction 452

2. Available Documents for Steel Construction 452
N4. Inspection and Nondestructive Testing Personnel 453
1. Quality Control Inspector Qualifications 453
2. Quality Assurance Inspector Qualifications 453
3. NDT Personnel Qualifications 453
N5. Minimum Requirements for Inspection of Structural Steel Buildings 454
1. Quality Control 454
2. Quality Assurance 454
3. Coordinated Inspection 455
4. Inspection of Welding 456
5. Nondestructive Testing of Welded Joints 460
5a. Procedures 460
5b. CJP Groove Weld NDT 460
5c. Access Hole NDT 462
5d. Welded Joints Subjected to Fatigue 462
5e. Reduction of Rate of Ultrasonic Testing 462
5f. Increase in Rate of Ultrasonic Testing 463
6. Inspection of High-Strength Bolting 463
7. Other Inspection Tasks 464
N6. Minimum Requirements for Inspection of Composite Construction 466
N7. Approved Fabricators and Erectors 466

APPENDIX 1. DESIGN BY INELASTIC ANALYSIS 468
1.1. General Requirements 468
1.2. Ductility Requirements 470
1. Material 471
2. Cross Section 471
3. Unbraced Length 472
4. Axial Force 473
1.3. Analysis Requirements 473
1. Material Properties and Yield Criteria 474
2. Geometric Imperfections 474
3. Residual Stresses and Partial Yielding Effects 474

APPENDIX 2. DESIGN FOR PONDING 476

APPENDIX 3. DESIGN FOR FATIGUE 479
3.1. General 479
3.2. Calculation of Maximum Stresses and Stress Ranges 479
3.3. Plain Material and Welded Joints 480
3.4. Bolts and Threaded Parts 481
3.5. Special Fabrication and Erection Requirements 482

APPENDIX 4. STRUCTURAL DESIGN FOR FIRE CONDITIONS 483
4.1. General Provisions 483

4.1.1. Performance Objective . . . 483
4.1.2. Design by Engineering Analysis . . . 483
4.1.4. Load Combinations and Required Strength . . . 484
4.2. Structural Design for Fire Conditions by Analysis . . . 485
4.2.1. Design-Basis Fire . . . 485
4.2.1.1. Localized Fire . . . 485
4.2.1.2. Post-Flashover Compartment Fires . . . 485
4.2.1.3. Exterior Fires . . . 486
4.2.1.4. Active Fire Protection Systems . . . 486
4.2.2. Temperatures in Structural Systems Under Fire Conditions . . . 486
4.2.3. Material Strengths at Elevated Temperatures . . . 490
4.2.4. Structural Design Requirements . . . 491
4.2.4.1. General Structural Integrity . . . 491
4.2.4.2. Strength Requirements and Deformation Limits . . . 491
4.2.4.3. Methods of Analysis . . . 491
4.2.4.3a. Advanced Methods of Analysis . . . 491
4.2.4.3b. Simple Methods of Analysis . . . 492
4.2.4.4. Design Strength . . . 492
4.3. Design by Qualification Testing . . . 493
4.3.1. Qualification Standards . . . 493
4.3.2. Restrained Construction . . . 493
4.3.3. Unrestrained Construction . . . 494
Bibliography . . . 495

APPENDIX 5. EVALUATION OF EXISTING STRUCTURES . . . 497
5.1. General Provisions . . . 497
5.2. Material Properties . . . 497
1. Determination of Required Tests . . . 497
2. Tensile Properties . . . 497
4. Base Metal Notch Toughness . . . 498
5. Weld Metal . . . 498
6. Bolts and Rivets . . . 498
5.3. Evaluation by Structural Analysis . . . 498
2. Strength Evaluation . . . 498
5.4. Evaluation by Load Tests . . . 499
1. Determination of Load Rating by Testing . . . 499
2. Serviceability Evaluation . . . 499
5.5. Evaluation Report . . . 500

APPENDIX 6. STABILITY BRACING FOR COLUMNS AND BEAMS . . . 501
6.1. General Provisions . . . 501
6.2. Column Bracing . . . 504
6.3. Beam Bracing . . . 505
1. Lateral Bracing . . . 506
2. Torsional Bracing . . . 506

6.4 Beam-Column Bracing 508

APPENDIX 7. ALTERNATIVE METHODS OF DESIGN FOR STABILITY . . 509

7.2. Effective Length Method 509

7.3. First-Order Analysis Method 518

APPENDIX 8. APPROXIMATE SECOND-ORDER ANALYSIS 520

REFERENCES 527

SYMBOLS

Some definitions in the list below have been simplified in the interest of brevity. In all cases, the definitions given in the body of the *Specification* govern. Symbols without text definitions, used only in one location and defined at that location are omitted in some cases. The section or table number in the right-hand column refers to the Section where the symbol is first used.

Symbol	Definition	Section
A_{BM}	Cross-sectional area of the base metal, in.^{2} (mm^2)	J2.4
A_b	Nominal unthreaded body area of bolt or threaded part, in.^{2} (mm^2)	J3.6
A_{bi}	Cross-sectional area of the overlapping branch, in.^{2} (mm^2)	K2.3
A_{bj}	Cross-sectional area of the overlapped branch, in.^{2} (mm^2)	K2.3
A_c	Area of concrete, in.^{2} (mm^2)	I2.1b
A_c	Area of concrete slab within effective width, in.^{2} (mm^2)	I3.2d
A_e	Effective net area, in.^{2} (mm^2)	D2
A_e	Summation of the effective areas of the cross section based on the reduced effective width, b_e, in.^{2} (mm^2)	E7.2
A_{fc}	Area of compression flange, in.^{2} (mm^2)	G3.1
A_{fg}	Gross area of tension flange, in.^{2} (mm^2)	F13.1
A_{fn}	Net area of tension flange, in.^{2} (mm^2)	F13.1
A_{ft}	Area of tension flange, in.^{2} (mm^2)	G3.1
A_g	Gross cross-sectional area of member, in.^{2} (mm^2)	B3.7
A_g	Gross area of composite member, in.^{2} (mm^2)	I2.1
A_{gv}	Gross area subject to shear, in.^{2} (mm^2)	J4.3
A_n	Net area of member, in.^{2} (mm^2)	B4.3
A_n	Area of the directly connected elements, in.^{2} (mm^2)	Table D3.1
A_{nt}	Net area subject to tension, in.^{2} (mm^2)	J4.3
A_{nv}	Net area subject to shear, in.^{2} (mm^2)	J4.3
A_{pb}	Projected area in bearing, in.^{2} (mm^2)	J7
A_s	Cross-sectional area of steel section, in.^{2} (mm^2)	I2.1b
A_{sa}	Cross-sectional area of steel headed stud anchor, in.^{2} (mm^2)	I8.2a
A_{sf}	Area on the shear failure path, in.^{2} (mm^2)	D5.1
A_{sr}	Area of continuous reinforcing bars, in.^{2} (mm^2)	I2.1
A_{sr}	Area of adequately developed longitudinal reinforcing steel within the effective width of the concrete slab, in.^{2} (mm^2)	I3.2d
A_t	Net area in tension, in.^{2} (mm^2)	App. 3.4
A_w	Area of web, the overall depth times the web thickness, dt_w, in.^{2} (mm^2)	G2.1
A_{we}	Effective area of the weld, in.^{2} (mm^2)	J2.4
A_{wei}	Effective area of weld throat of any *i*th weld element, in.^{2} (mm^2)	J2.4
A_1	Loaded area of concrete, in.^{2} (mm^2)	I6.3a
A_1	Area of steel concentrically bearing on a concrete support, in.^{2} (mm^2)	J8

Symbol	Definition	Section
A_2	Maximum area of the portion of the supporting surface that is geometrically similar to and concentric with the loaded area, in.^{2} (mm^2)	J8
B	Overall width of rectangular HSS member, measured 90 ° to the plane of the connection, in. (mm)	Table D3.1
B	Overall width of rectangular steel section along face transferring load, in. (mm)	I6.3c
B_b	Overall width of rectangular HSS branch member, measured 90 ° to the plane of the connection, in. (mm)	K2.1
B_{bi}	Overall width of the overlapping branch, in. (mm)	K2.3
B_{bj}	Overall width of the overlapped branch, in. (mm)	K2.3
B_p	Width of plate, measured 90 ° to the plane of the connection, in. (mm)	K1.1
B_1	Multiplier to account for P-δ effects	App.8.2
B_2	Multiplier to account for P-Δ effects	App.8.2
C	HSS torsional constant	H3.1
C_b	Lateral-torsional buckling modification factor for nonuniform moment diagrams	F1
C_d	Coefficient accounting for increased required bracing stiffness at inflection point	App. 6.3.1
C_f	Constant from Table A-3.1 for the fatigue category	App. 3.3
C_m	Coefficient accounting for nonuniform moment	App. 8.2.1
C_p	Ponding flexibility coefficient for primary member in a flat roof	App. 2.1
C_r	Coefficient for web sidesway buckling	J10.4
C_s	Ponding flexibility coefficient for secondary member in a flat roof	App. 2.1
C_v	Web shear coefficient	G2.1
C_w	Warping constant, in.^{6} (mm^6)	E4
C_2	Edge distance increment	Table J3.5
D	Outside diameter of round HSS, in. (mm)	Table B4.1
D	Outside diameter of round HSS main member, in. (mm)	K2.1
D	Nominal dead load, kips (N)	App. 2.2
D_b	Outside diameter of round HSS branch member, in. (mm)	K2.1
D_u	In slip-critical connections, a multiplier that reflects the ratio of the mean installed bolt pretension to the specified minimum bolt pretension	J3.8
E	Modulus of elasticity of steel = 29,000 ksi (200 000 MPa)	Table B4.1
E_c	Modulus of elasticity of concrete = $w_c^{1.5}\sqrt{f'_c}$, ksi ($0.043w_c^{1.5}\sqrt{f'_c}$, MPa)	I2.1b
$E_c(T)$	Modulus of elasticity of concrete at elevated temperature, ksi (MPa)	App. 4.2.3.2
E_s	Modulus of elasticity of steel = 29,000 ksi (200 000 MPa)	I2.1b
$E(T)$	Elastic modulus of elasticity of steel at elevated temperature, ksi (MPa)	App. 4.2.4.3

Symbol	Definition	Section
EI_{eff}	Effective stiffness of composite section, kip-in.^{2} (N-mm^2)	I2.1b
F_c	Available stress, ksi (MPa)	K1.1
F_{ca}	Available axial stress at the point of consideration, ksi (MPa)	H2
F_{cbw}, F_{cbz}	Available flexural stress at the point of consideration, ksi (MPa)	H2
F_{cr}	Critical stress, ksi (MPa)	E3
F_{cry}	Critical stress about the *y*-axis of symmetry, ksi (MPa)	E4
F_{crz}	Critical torsional buckling stress, ksi (MPa)	E4
F_e	Elastic buckling stress, ksi (MPa)	E3
$F_e(T)$	Critical elastic buckling stress with the elastic modulus $E(T)$ at elevated temperature, ksi (MPa)	App. 4.2.4.3
F_{ex}	Flexural elastic buckling stress about the major principal axis, ksi (MPa)	E4
F_{EXX}	Filler metal classification strength, ksi (MPa)	J2.4
F_{ey}	Flexural elastic buckling stress about the major principal axis, ksi (MPa)	E4
F_{ez}	Torsional elastic buckling stress, ksi (MPa)	E4
F_{in}	Nominal bond stress, 0.06 ksi (0.40 MPa)	I6.3c
F_L	Magnitude of flexural stress in compression flange at which flange local buckling or lateral-torsional buckling is influenced by yielding, ksi (MPa)	Table B4.1
F_n	Nominal stress, ksi (MPa)	H3.3
F_n	Nominal tensile stress, F_{nt}, or shear stress, F_{nv}, from Table J3.2, ksi (MPa)	J3.6
F_{nBM}	Nominal stress of the base metal, ksi (MPa)	J2.4
F_{nt}	Nominal tensile stress from Table J3.2, ksi (MPa)	J3.7
F'_{nt}	Nominal tensile stress modified to include the effects of shear stress, ksi (MPa)	J3.7
F_{nv}	Nominal shear stress from Table J3.2, ksi (MPa)	J3.7
F_{nw}	Nominal stress of the weld metal, ksi (MPa)	J2.4
F_{nw}	Nominal stress of the weld metal (Chapter J) with no increase in strength due to directionality of load, ksi (MPa)	K4
F_{nwi}	Nominal stress in *i*th weld element, ksi (MPa)	J2.4
F_{nwix}	*x* component of nominal stress, F_{nwi}, ksi (MPa)	J2.4
F_{nwiy}	*y* component of nominal stress, F_{nwi}, ksi (MPa)	J2.4
$F_p(T)$	Proportional limit at elevated temperatures, ksi (MPa)	App. 4.2.3.2
F_{SR}	Allowable stress range, ksi (MPa)	App. 3.3
F_{TH}	Threshold allowable stress range, maximum stress range for indefinite design life from Table A-3.1, ksi (MPa)	App. 3.1
F_u	Specified minimum tensile strength, ksi (MPa)	D2
$F_u(T)$	Minimum tensile strength at elevated temperature, ksi (MPa)	App. 4.2.3.2
F_y	Specified minimum yield stress, ksi (MPa). As used in this Specification, "yield stress" denotes either the specified minimum yield point (for those steels that have a yield point) or specified yield strength (for those steels that do not have a yield point)	B3.7

Symbol	Definition	Section
F_{yb}	Specified minimum yield stress of HSS branch member material, ksi (MPa)	K2.1
F_{ybi}	Specified minimum yield stress of the overlapping branch material, ksi (MPa)	K2.3
F_{ybj}	Specified minimum yield stress of the overlapped branch material, ksi (MPa)	K2.3
F_{yf}	Specified minimum yield stress of the flange, ksi (MPa)	J10.1
F_{yp}	Specified minimum yield stress of plate, ksi (MPa)	K1.1
F_{ysr}	Specified minimum yield stress of reinforcing bars, ksi (MPa)	I2.1b
F_{yst}	Specified minimum yield stress of the stiffener material, ksi (MPa)	G3.3
$F_y(T)$	Yield stress at elevated temperature, ksi (MPa)	App. 4.2.4.3
F_{yw}	Specified minimum yield stress of the web material, ksi (MPa)	G3.3
G	Shear modulus of elasticity of steel = 11,200 ksi (77 200 MPa)	E4
$G(T)$	Shear modulus of elasticity of steel at elevated temperature, ksi (MPa)	App. 4.2.3.2
H	Flexural constant	E4
H	Story shear, in the direction of translation being considered, produced by the lateral forces used to compute Δ_H, kips (N)	App. 8.2.2
H	Overall height of rectangular HSS member, measured in the plane of the connection, in. (mm)	Table D3.1
H_b	Overall height of rectangular HSS branch member, measured in the plane of the connection, in. (mm)	K2.1
H_{bi}	Overall depth of the overlapping branch, in. (mm)	K2.3
I	Moment of inertia in the plane of bending, in.^{4} (mm^4)	App. 8.2.1
I_c	Moment of inertia of the concrete section about the elastic neutral axis of the composite section, in.^{4} (mm^4)	I2.1b
I_d	Moment of inertia of the steel deck supported on secondary members, in.^{4} (mm^4)	App. 2.1
I_p	Moment of inertia of primary members, in.^{4} (mm^4)	App. 2.1
I_s	Moment of inertia of secondary members, in.^{4} (mm^4)	App. 2.1
I_s	Moment of inertia of steel shape about the elastic neutral axis of the composite section, in.^{4} (mm^4)	I2.1b
I_{sr}	Moment of inertia of reinforcing bars about the elastic neutral axis of the composite section, in.^{4} (mm^4)	I2.1b
I_{st}	Moment of inertia of transverse stiffeners about an axis in the web center for stiffener pairs, or about the face in contact with the web plate for single stiffeners, in.^{4} (mm^4)	G3.3
I_{st1}	Minimum moment of inertia of transverse stiffeners required for development of the web shear buckling resistance in Section G2.2, in.^{4} (mm^4)	G3.3
I_{st2}	Minimum moment of inertia of transverse stiffeners required for development of the full web shear buckling plus the web tension field resistance, $V_r = V_{c2}$, in.^{4} (mm^4)	G3.3
I_x, I_y	Moment of inertia about the principal axes, in.^{4} (mm^4)	E4

Symbol	Definition	Section
I_y	Out-of-plane moment of inertia, in.^{4} (mm^4)	App. 6.3.2a
I_{yc}	Moment of inertia of the compression flange about the *y*-axis, in.^{4} (mm^4)	F4.2
I_z	Minor principal axis moment of inertia, in.^{4} (mm^4)	F10.2
J	Torsional constant, in.^{4} (mm^4)	E4
K	Effective length factor	C3, E2
K_x	Effective length factor for flexural buckling about *x*-axis	E4
K_y	Effective length factor for flexural buckling about *y*-axis	E4
K_z	Effective length factor for torsional buckling	E4
K_1	Effective length factor in the plane of bending, calculated based on the assumption of no lateral translation at the member ends, set equal to 1.0 unless analysis justifies a smaller value	App. 8.2.1
L	Height of story, in. (mm)	App. 7.3.2
L	Length of member, in. (mm)	H3.1
L	Nominal occupancy live load	App. 4.1.4
L	Laterally unbraced length of member, in. (mm)	E2
L	Length of span, in. (mm)	App. 6.3.2a
L	Length of member between work points at truss chord centerlines, in. (mm)	E5
L_b	Length between points that are either braced against lateral displacement of compression flange or braced against twist of the cross section, in. (mm)	F2.2
L_b	Distance between braces, in. (mm)	App. 6.2
L_b	Largest laterally unbraced length along either flange at the point of load, in. (mm)	J10.4
L_m	Limiting laterally unbraced length for eligibility for moment redistribution in beams according to Section B3.7	F13.5
L_p	Limiting laterally unbraced length for the limit state of yielding, in. (mm)	F2.2
L_p	Length of primary members, ft (m)	App. 2.1
L_{pd}	Limiting laterally unbraced length for plastic analysis, in. (mm)	App. 1.2.3
L_r	Limiting laterally unbraced length for the limit state of inelastic lateral-torsional buckling, in. (mm)	F2.2
L_s	Length of secondary members, ft (m)	App. 2.1
L_v	Distance from maximum to zero shear force, in. (mm)	G6
M_A	Absolute value of moment at quarter point of the unbraced segment, kip-in. (N-mm)	F1
M_a	Required flexural strength using ASD load combinations, kip-in. (N-mm)	J10.4
M_B	Absolute value of moment at centerline of the unbraced segment, kip-in. (N-mm)	F1
M_C	Absolute value of moment at three-quarter point of the unbraced segment, kip-in. (N-mm)	F1
M_{cx}, M_{cy}	Available flexural strength determined in accordance with Chapter F, kip-in. (N-mm)	H1.1

Symbol	Definition	Section
M_{cx}	Available lateral-torsional strength for strong axis flexure determined in accordance with Chapter F using C_b = 1.0, kip-in. (N-mm)	H1.3
M_{cx}	Available flexural strength about the *x*-axis for the limit state of tensile rupture of the flange, kip-in. (N-mm)	H4
M_e	Elastic lateral-torsional buckling moment, kip-in. (N-mm)	F10.2
M_{lt}	First-order moment using LRFD or ASD load combinations, due to lateral translation of the structure only, kip-in. (N-mm)	App. 8.2
M_{max}	Absolute value of maximum moment in the unbraced segment, kip-in. (N-mm)	F1
M_{mid}	Moment at the middle of the unbraced length, kip-in. (N-mm)	App. 1.2.3
M_n	Nominal flexural strength, kip-in. (N-mm)	F1
M_{nt}	First-order moment using LRFD or ASD load combinations, with the structure restrained against lateral translation, kip-in. (N-mm)	App. 8.2
M_p	Plastic bending moment, kip-in. (N-mm)	Table B4.1
M_p	Moment corresponding to plastic stress distribution over the composite cross section, kip-in. (N-mm)	I3.4b
M_r	Required second-order flexural strength under LRFD or ASD load combinations, kip-in. (N-mm)	App. 8.2
M_r	Required flexural strength using LRFD or ASD load combinations, kip-in. (N-mm)	H1.1
M_{rb}	Required bracing moment using LRFD or ASD load combinations, kip-in. (N-mm)	App. 6.3.2
$M_{r\text{-}ip}$	Required in-plane flexural strength in branch using LRFD or ASD load combinations, kip-in. (N-mm)	K3.2
$M_{r\text{-}op}$	Required out-of-plane flexural strength in branch using LRFD or ASD load combinations, kip-in. (N-mm)	K3.2
M_{rx},M_{ry}	Required flexural strength, kip-in. (N-mm)	H1.1
M_{rx}	Required flexural strength at the location of the bolt holes; positive for tension in the flange under consideration, negative for compression, kip-in. (N-mm)	H4
M_u	Required flexural strength using LRFD load combinations, kip-in. (N-mm)	J10.4
M_y	Moment at yielding of the extreme fiber, kip-in. (N-mm)	Table B4.1
M_y	Yield moment about the axis of bending, kip-in. (N-mm)	F10.1
M_{yc}	Moment at yielding of the extreme fiber in the compression flange, kip-in. (N-mm)	F4.2
M_{yt}	Moment at yielding of the extreme fiber in the tension flange, kip-in. (N-mm)	F4.4
M_1'	Effective moment at the end of the unbraced length opposite from M_2, kip-in. (N-mm)	App. 1.2.3
M_1	Smaller moment at end of unbraced length, kip-in. (N-mm)	F13.5, App. 1.2.3
M_2	Larger moment at end of unbraced length, kip-in. (N-mm)	F13.5, App. 1.2.3

Symbol	Definition	Section
N_i	Notional load applied at level i, kips (N)	C2.2b
N_i	Additional lateral load, kips (N)	App. 7.3
O_v	Overlap connection coefficient	K2.2
P_c	Available axial strength, kips (N)	H1.1
P_{cy}	Available compressive strength out of the plane of bending, kips (N)	H1.3
P_e	Elastic critical buckling load determined in accordance with Chapter C or Appendix 7, kips (N)	I2.1b
$P_{e\,story}$	Elastic critical buckling strength for the story in the direction of translation being considered, kips (N)	App 8.2.2
P_{ey}	Elastic critical buckling load for buckling about the weak axis, kips (N)	H1.2
P_{e1}	Elastic critical buckling strength of the member in the plane of bending, kips (N)	App. 8.2.1
P_{lt}	First-order axial force using LRFD or ASD load combinations, due to lateral translation of the structure only, kips (N)	App. 8.2
P_{mf}	Total vertical load in columns in the story that are part of moment frames, if any, in the direction of translation being considered, kips (N)	App. 8.2.2
P_n	Nominal axial strength, kips (N)	D2
P_n	Nominal compressive strength, kips (N)	E1
P_{no}	Nominal compressive strength of zero length, doubly symmetric, axially loaded composite member, kips (N)	I2
P_{nt}	First-order axial force using LRFD and ASD load combinations, with the structure restrained against lateral translation, kips (N)	App. 8.2
P_p	Nominal bearing strength, kips (N)	J8
P_r	Required second-order axial strength using LRFD or ASD load combinations, kips (N)	App. 8.2
P_r	Required axial compressive strength using LRFD or ASD load combinations, kips (N)	C2.3
P_r	Required axial strength using LRFD or ASD load combinations, kips (N)	H1.1
P_r	Required axial strength of the member at the location of the bolt holes; positive in tension, negative in compression, kips (N)	H4
P_r	Required external force applied to the composite member, kips (N)	I6.2a
P_{rb}	Required brace strength using LRFD or ASD load combinations, kips (N)	App. 6.2
P_{ro}	Required axial strength in chord at a joint, on the side of joint with lower compression stress, kips (N)	Table K1.1
P_{story}	Total vertical load supported by the story using LRFD or ASD load combinations, as applicable, including loads in columns that are not part of the lateral force resisting system, kips (N)	App. 8.2.2
P_u	Required axial strength in chord using LRFD load combinations, kips (N)	K1.1
P_u	Required axial strength in compression, kips (N)	App. 1.2.2
P_y	Axial yield strength, kips (N)	C2.3
Q	Net reduction factor accounting for all slender compression elements	E7

Symbol	Definition	Section
Q_a	Reduction factor for slender stiffened elements	E7.2
Q_{ct}	Available tensile strength, kips (N)	I8.3c
Q_{cv}	Available shear strength, kips (N)	I8.3c
Q_f	Chord-stress interaction parameter	K2.2
Q_n	Nominal strength of one steel headed stud or steel channel anchor, kips (N)	I3.2
Q_{nt}	Nominal tensile strength of steel headed stud anchor, kips (N)	I8.3b
Q_{nv}	Nominal shear strength of steel headed stud anchor, kips (N)	I8.3a
Q_{rt}	Required tensile strength, kips (N)	I8.3c
Q_{rv}	Required shear strength, kips (N)	I8.3c
Q_s	Reduction factor for slender unstiffened elements	E7.1
R	Radius of joint surface, in. (mm)	Table J2.2
R	Nominal load due to rainwater or snow, exclusive of the ponding contribution, ksi (MPa)	App. 2.2
R	Seismic response modification coefficient	A1.1
R_a	Required strength using ASD load combinations	B3.4
R_{FIL}	Reduction factor for joints using a pair of transverse fillet welds only	App. 3.3
R_g	Coefficient to account for group effect	I8.2a
R_M	Coefficient to account for influence of P-δ on P-Δ	App. 8.2.2
R_n	Nominal strength, specified in Chapters B through K	B3.3
R_n	Nominal slip resistance, kips (N)	J3.8
R_n	Nominal strength of the applicable force transfer mechanism, kips (N)	I6.3
R_{nwl}	Total nominal strength of longitudinally loaded fillet welds, as determined in accordance with Table J2.5, kips (N)	J2.4
R_{nwt}	Total nominal strength of transversely loaded fillet welds, as determined in accordance with Table J2.5 without the alternate in Section J2.4(a), kips (N)	J2.4
R_{nx}	Horizontal component of the nominal strength of a weld group, kips (N)	J2.4
R_{ny}	Vertical component of the nominal strength of a weld group, kips (N)	J2.4
R_p	Position effect factor for shear studs	I8.2a
R_{pc}	Web plastification factor	F4.1
R_{pg}	Bending strength reduction factor	F5.2
R_{PJP}	Reduction factor for reinforced or nonreinforced transverse partial-joint-penetration (PJP) groove welds	App. 3.3
R_{pt}	Web plastification factor corresponding to the tension flange yielding limit state	F4.4
R_u	Required strength using LRFD load combinations	B3.3
S	Elastic section modulus, in.^{3} (mm^3)	F8.2
S	Spacing of secondary members, ft (m)	App. 2.1
S	Nominal snow load	App. 4.1.4
S_c	Elastic section modulus to the toe in compression relative to the axis of bending, in.^{3} (mm^3).	F10.3

Symbol	Definition	Section
S_e	Effective section modulus about major axis, in.^{3} (mm^3)	F7.2
S_{ip}	Effective elastic section modulus of welds for in-plane bending (Table K4.1), in.^{3} (mm^3)	K4
S_{min}	Lowest elastic section modulus relative to the axis of bending, in.^{3} (mm^3)	F12
S_{op}	Effective elastic section modulus of welds for out-of-plane bending (Table K4.1), in.^{3} (mm^3)	K4
S_{xc}, S_{xt}	Elastic section modulus referred to compression and tension flanges, respectively, in.^{3} (mm^3)	Table B4.1
S_x	Elastic section modulus taken about the x-axis, in.^{3} (mm^3)	F2.2
S_y	Elastic section modulus taken about the y-axis. For a channel, the minimum section modulus, in.^{3} (mm^3)	F6.2
T	Nominal forces and deformations due to the design-basis fire defined in Appendix Section 4.2.1	App. 4.1.4
T_a	Required tension force using ASD load combinations, kips (N)	J3.9
T_b	Minimum fastener tension given in Table J3.1 or J3.1M, kips (N)	J3.8
T_c	Available torsional strength, kip-in. (N-mm)	H3.2
T_n	Nominal torsional strength, kip-in. (N-mm)	H3.1
T_r	Required torsional strength using LRFD or ASD load combinations, kip-in. (N-mm)	H3.2
T_u	Required tension force using LRFD load combinations, kips (N)	J3.9
U	Shear lag factor	D3
U	Utilization ratio	K2.2
U_{bs}	Reduction coefficient, used in calculating block shear rupture strength	J4.3
U_p	Stress index for primary members	App. 2.2
U_s	Stress index for secondary members	App. 2.2
V'	Nominal shear force between the steel beam and the concrete slab transferred by steel anchors, kips (N)	I3.2d
V_c	Available shear strength, kips (N)	H3.2
V_{c1}	Smaller of the available shear strengths in the adjacent web panels with V_n as defined in Section G2.1, kips (N)	G3.3
V_{c2}	Smaller of the available shear strengths in the adjacent web panels with V_n as defined in Section G3.2, kips (N)	G3.3
V_n	Nominal shear strength, kips (N)	G1
V_r	Larger of the required shear strengths in the adjacent web panels using LRFD or ASD load combinations, kips (N)	G3.3
V_r	Required shear strength using LRFD or ASD load combinations, kips (N)	H3.2
V_r'	Required longitudinal shear force to be transferred to the steel or concrete, kips (N)	I6.2
Y_i	Gravity load applied at level i from the LRFD load combination or ASD load combination, as applicable, kips (N)	C2.2b, App. 7.3.2
Z	Plastic section modulus about the axis of bending, in.^{3} (mm^3)	F7.1

Symbol	Definition	Section
Z_b	Plastic section modulus of branch about the axis of bending, in.^{3} (mm^3)	K3.1
Z_x	Plastic section modulus about the x-axis, in.^{3} (mm^3)	F2.1
Z_y	Plastic section modulus about the y-axis, in.^{3} (mm^3)	F6.1
a	Clear distance between transverse stiffeners, in. (mm)	F13.2
a	Distance between connectors, in. (mm)	E6.1
a	Shortest distance from edge of pin hole to edge of member measured parallel to the direction of force, in. (mm)	D5.1
a	Half the length of the nonwelded root face in the direction of the thickness of the tension-loaded plate, in. (mm)	App. 3.3
a'	Weld length along both edges of the cover plate termination to the beam or girder, in. (mm)	F13.3
a_w	Ratio of two times the web area in compression due to application of major axis bending moment alone to the area of the compression flange components	F4.2
b	Full width of leg in compression, in. (mm)	F10.3
b	For flanges of I-shaped members, half the full-flange width, b_f; for flanges of channels, the full nominal dimension of the flange, in. (mm)	F6.2
b	Full width of longest leg, in. (mm)	E7.1
b	Width of unstiffened compression element; width of stiffened compression element, in. (mm)	B4.1
b	Width of the leg resisting the shear force, in. (mm)	G4
b_{cf}	Width of column flange, in. (mm)	J10.6
b_e	Reduced effective width, in. (mm)	E7.2
b_e	Effective edge distance for calculation of tensile rupture strength of pin-connected member, in. (mm)	D5.1
b_{eoi}	Effective width of the branch face welded to the chord, in. (mm)	K2.3
b_{eov}	Effective width of the branch face welded to the overlapped brace, in. (mm)	K2.3
b_f	Width of flange, in. (mm)	B4.1
b_{fc}	Width of compression flange, in. (mm)	F4.2
b_{ft}	Width of tension flange, in. (mm)	G3.1
b_l	Length of longer leg of angle, in. (mm)	E5
b_s	Length of shorter leg of angle, in. (mm)	E5
b_s	Stiffener width for one-sided stiffeners, in. (mm)	App. 6.3.2
d	Nominal fastener diameter, in. (mm)	J3.3
d	Nominal bolt diameter, in. (mm)	J3.10
d	Full nominal depth of the section, in. (mm)	B4.1, J10.3
d	Depth of rectangular bar, in. (mm)	F11.2
d	Diameter, in. (mm)	J7
d	Diameter of pin, in. (mm)	D5.1
d_b	Depth of beam, in. (mm)	J10.6
d_b	Nominal diameter (body or shank diameter), in. (mm)	App. 3.4
d_c	Depth of column, in. (mm)	J10.6

Symbol	Definition	Section
e	Eccentricity in a truss connection, positive being away from the branches, in. (mm)	K2.1
$e_{mid\text{-}ht}$	Distance from the edge of steel headed stud anchor shank to the steel deck web, in. (mm)	I8.2a
f_c'	Specified compressive strength of concrete, ksi (MPa)	I1.2b
$f_c'(T)$	Compressive strength of concrete at elevated temperature, ksi (MPa)	I1.2b
f_o	Stress due to $D + R$ (D = nominal dead load, R = nominal load due to rainwater or snow exclusive of the ponding contribution), ksi (MPa)	App. 2.2
f_{ra}	Required axial stress at the point of consideration using LRFD or ASD load combinations, ksi (MPa)	H2
f_{rbw}, f_{rbz}	Required flexural stress at the point of consideration using LRFD or ASD load combinations, ksi (MPa)	H2
f_{rv}	Required shear stress using LRFD or ASD load combinations, ksi (MPa)	J3.7
g	Transverse center-to-center spacing (gage) between fastener gage lines, in. (mm)	B4.3
g	Gap between toes of branch members in a gapped K-connection, neglecting the welds, in. (mm)	K2.1
h	Width of stiffened compression element, in. (mm)	B4.1
h	Height of shear element, in. (mm)	G2.1b
h	Clear distance between flanges less the fillet or corner radius for rolled shapes; distance between adjacent lines of fasteners or the clear distance between flanges when welds are used for built-up shapes, in. (mm)	J10.4
h_c	Twice the distance from the center of gravity to the following: the inside face of the compression flange less the fillet or corner radius, for rolled shapes; the nearest line of fasteners at the compression flange or the inside faces of the compression flange when welds are used, for built-up sections, in. (mm)	B4.1
h_o	Distance between the flange centroids, in. (mm)	F2.2
h_p	Twice the distance from the plastic neutral axis to the nearest line of fasteners at the compression flange or the inside face of the compression flange when welds are used, in. (mm)	B4.1
h_r	Nominal height of rib, in. (mm)	I8.2a
k	Distance from outer face of flange to the web toe of fillet, in. (mm)	J10.2
k_c	Coefficient for slender unstiffened elements	Table B4.1
k_{sc}	Slip-critical combined tension and shear coefficient	J3.9
k_v	Web plate shear buckling coefficient	G2.1
l	Actual length of end-loaded weld, in. (mm)	J2.2
l	Length of connection, in. (mm)	Table D3.1
l_b	Length of bearing, in. (mm)	J7
l_c	Clear distance, in the direction of the force, between the edge of the hole and the edge of the adjacent hole or edge of the material, in. (mm)	J3.10

Symbol	Definition	Section
l_{ca}	Length of channel anchor, in. (mm)	I8.2b
l_e	Total effective weld length of groove and fillet welds to rectangular HSS for weld strength calculations, in. (mm)	K4
l_{ov}	Overlap length measured along the connecting face of the chord beneath the two branches, in. (mm)	K2.1
l_p	Projected length of the overlapping branch on the chord, in. (mm)	K2.1
n	Number of nodal braced points within the span	App. 6.3
n	Threads per inch (per mm)	App. 3.4
n_b	Number of bolts carrying the applied tension	J3.9
n_s	Number of slip planes required to permit the connection to slip	J3.8
n_{SR}	Number of stress range fluctuations in design life	App. 3.3
p	Pitch, in. per thread (mm per thread)	App. 3.4
p_i	Ratio of element i deformation to its deformation at maximum stress	J2.4
r	Radius of gyration, in. (mm)	E2
r_{cr}	Distance from instantaneous center of rotation to weld element with minimum Δ_u/r_i ratio, in. (mm)	J2.4
r_i	Minimum radius of gyration of individual component, in. (mm)	E6.1
r_i	Distance from instantaneous center of rotation to ith weld element, in. (mm)	J2.4
$\overline{r_o}$	Polar radius of gyration about the shear center, in. (mm)	E4
r_t	Radius of gyration of the flange components in flexural compression plus one-third of the web area in compression due to application of major axis bending moment alone, in. (mm)	F4.2
r_{ts}	Effective radius of gyration, in. (mm)	F2.2
r_x	Radius of gyration about the x-axis, in. (mm)	E4
r_x	Radius of gyration about the geometric axis parallel to the connected leg, in. (mm)	E5
r_y	Radius of gyration about y-axis, in. (mm)	E4
r_z	Radius of gyration about the minor principal axis, in. (mm)	E5
s	Longitudinal center-to-center spacing (pitch) of any two consecutive holes, in. (mm)	B4.3
t	Thickness of element, in. (mm)	E7.1
t	Thickness of wall, in. (mm)	E7.2
t	Thickness of angle leg, in. (mm)	F10.2
t	Width of rectangular bar parallel to axis of bending, in. (mm)	F11.2
t	Thickness of connected material, in. (mm)	J3.10
t	Thickness of plate, in. (mm)	D5.1
t	Total thickness of fillers, in. (mm)	J5.2
t	Design wall thickness of HSS member, in. (mm)	B4.1, K1.1
t_b	Design wall thickness of HSS branch member, in. (mm)	K2.1
t_{bi}	Thickness of overlapping branch, in. (mm)	K2.3
t_{bj}	Thickness of overlapped branch, in. (mm)	K2.3
t_{cf}	Thickness of column flange, in. (mm)	J10.6
t_f	Thickness of flange, in. (mm)	F6.2
t_f	Thickness of loaded flange, in. (mm)	J10.1

Symbol	Definition	Section
t_f	Thickness of flange of channel anchor, in. (mm)	I8.2b
t_{fc}	Thickness of compression flange, in. (mm)	F4.2
t_p	Thickness of plate, in. (mm)	K1.1
t_p	Thickness of tension loaded plate, in. (mm)	App. 3.3
t_{st}	Thickness of web stiffener, in. (mm)	App. 6.3.2a
t_w	Thickness of web, in. (mm)	Table B4.1
t_w	Smallest effective weld throat thickness around the perimeter of branch or plate, in. (mm)	K4
t_w	Thickness of channel anchor web, in. (mm)	I8.2b
w	Width of cover plate, in. (mm)	F13.3
w	Size of weld leg, in. (mm)	J2.2
w	Subscript relating symbol to major principal axis bending	H2
w	Width of plate, in. (mm)	Table D3.1
w	Leg size of the reinforcing or contouring fillet, if any, in the direction of the thickness of the tension-loaded plate, in. (mm)	App. 3.3
w_c	Weight of concrete per unit volume ($90 \le w_c \le 155$ lbs/ft^3 or $1500 \le w_c \le 2500$ kg/m^3)	I2.1
w_r	Average width of concrete rib or haunch, in. (mm)	I3.2
x	Subscript relating symbol to strong axis bending	H1.1
x_i	x component of r_i	J2.4
x_o, y_o	Coordinates of the shear center with respect to the centroid, in. (mm)	E4
$\overline{x}$	Eccentricity of connection, in. (mm)	Table D3.1
y	Subscript relating symbol to weak axis bending	H1.1
y_i	y component of r_i	J2.4
z	Subscript relating symbol to minor principal axis bending	H2
α	ASD/LRFD force level adjustment factor	C2.3
β	Reduction factor given by Equation J2-1	J2.2
β	Width ratio; the ratio of branch diameter to chord diameter for round HSS; the ratio of overall branch width to chord width for rectangular HSS	K2.1
β_T	Overall brace system stiffness, kip-in./rad (N-mm/rad)	App. 6.3.2a
β_{br}	Required brace stiffness, kips/in. (N/mm)	App. 6.2.1
β_{eff}	Effective width ratio; the sum of the perimeters of the two branch members in a K-connection divided by eight times the chord width	K2.1
β_{eop}	Effective outside punching parameter	K2.3
β_{sec}	Web distortional stiffness, including the effect of web transverse stiffeners, if any, kip-in./rad (N-mm/rad)	App. 6.3.2a
β_{Tb}	Required torsional stiffness for nodal bracing, kip-in./rad (N-mm/rad)	App. 6.3.2a
β_w	Section property for unequal leg angles, positive for short legs in compression and negative for long legs in compression	F10.2
Δ	First-order interstory drift due to the LRFD or ASD load combinations, in. (mm)	App. 7.3.2
Δ_H	First-order interstory drift due to lateral forces, in. (mm)	App. 8.2.2

Symbol	Definition	Section
Δ_i	Deformation of weld elements at intermediate stress levels, linearly proportioned to the critical deformation based on distance from the instantaneous center of rotation, r_i, in. (mm)	J2.4
Δ_{mi}	Deformation of weld element at maximum stress, in. (mm)	J2.4
Δ_{ui}	Deformation of weld element at ultimate stress (rupture), usually in element furthest from instantaneous center of rotation, in. (mm)	J2.4
$\varepsilon_{cu}(T)$	Maximum concrete strain at elevated temperature, %	App. 4.2.3.2
γ	Chord slenderness ratio; the ratio of one-half the diameter to the wall thickness for round HSS; the ratio of one-half the width to wall thickness for rectangular HSS	K2.1
ζ	Gap ratio; the ratio of the gap between the branches of a gapped K-connection to the width of the chord for rectangular HSS	K2.1
η	Load length parameter, applicable only to rectangular HSS; the ratio of the length of contact of the branch with the chord in the plane of the connection to the chord width	K2.1
λ	Slenderness parameter	F3.2
λ_p	Limiting slenderness parameter for compact element	B4
λ_{pd}	Limiting slenderness parameter for plastic design	App. 1.2
λ_{pf}	Limiting slenderness parameter for compact flange	F3.2
λ_{pw}	Limiting slenderness parameter for compact web	F4
λ_r	Limiting slenderness parameter for noncompact element	B4
λ_{rf}	Limiting slenderness parameter for noncompact flange	F3.2
λ_{rw}	Limiting slenderness parameter for noncompact web	F4.2
μ	Mean slip coefficient for Class A or B surfaces, as applicable, or as established by tests	J3.8
ϕ	Resistance factor, specified in Chapters B through K	B3.3
ϕ_B	Resistance factor for bearing on concrete	I6.3a
ϕ_b	Resistance factor for flexure	F1
ϕ_c	Resistance factor for compression	B3.7
ϕ_c	Resistance factor for axially loaded composite columns	I2.1b
ϕ_{sf}	Resistance factor for shear on the failure path	D5.1
ϕ_T	Resistance factor for torsion	H3.1
ϕ_t	Resistance factor for tension	D2
ϕ_t	Resistance factor for steel headed stud anchor in tension	I8.3b
ϕ_v	Resistance factor for shear	G1
ϕ_v	Resistance factor for steel headed stud anchor in shear	I8.3a
Ω	Safety factor, specified in Chapters B through K	B3.4
Ω_B	Safety factor for bearing on concrete	I6.1
Ω_b	Safety factor for flexure	F1
Ω_c	Safety factor for compression	B3.7
Ω_c	Safety factor for axially loaded composite columns	I2.1b
Ω_{sf}	Safety factor for shear on the failure path	D5.1
Ω_T	Safety factor for torsion	H3.1
Ω_t	Safety factor for tension	D2

Symbol	Definition	Section
Ω_t	Safety factor for steel headed stud anchor in tension	I8.3b
Ω_v	Safety factor for shear	G1
Ω_v	Safety factor for steel headed stud anchor in shear	I8.3a
ρ_{sr}	Minimum reinforcement ratio for longitudinal reinforcing	I2.1
ρ_{st}	The larger of F_{yw}/F_{yst} and 1.0	G3.3
θ	Angle of loading measured from the weld longitudinal axis, degrees	J2.4
θ	Acute angle between the branch and chord, degrees	K2.1
θ_i	Angle of loading measured from the longitudinal axis of ith weld element, degrees	J2.4
τ_b	Stiffness reduction parameter	C2.3

GLOSSARY

Terms defined in this Glossary are *italicized* in the Glossary and where they first appear within a section or long paragraph throughout the Specification.

Notes:
(1) Terms designated with † are common AISI-AISC terms that are coordinated between the two standards development organizations.
(2) Terms designated with * are usually qualified by the type of *load effect;* for example, *nominal tensile strength*, *available compressive strength*, and *design flexural strength*.
(3) Terms designated with ** are usually qualified by the type of component; for example, web *local buckling* and flange *local bending*.

Active fire protection. Building materials and systems that are activated by a fire to mitigate adverse effects or to notify people to take some action to mitigate adverse effects.

*Allowable strength**†. *Nominal strength* divided by the *safety factor*, R_n/Ω.

*Allowable stress**. *Allowable strength* divided by the appropriate section property, such as section modulus or cross-section area.

Applicable building code†. Building code under which the structure is designed.

ASD (allowable strength design)†. Method of proportioning *structural components* such that the *allowable strength* equals or exceeds the *required strength* of the component under the action of the *ASD load combinations.*

ASD load combination†. Load combination in the *applicable building code* intended for allowable strength design (*allowable stress* design*)*.

Authority having jurisdiction (AHJ). Organization, political subdivision, office or individual charged with the responsibility of administering and enforcing the provisions of the *applicable building code.*

*Available strength**†. *Design strength* or *allowable strength,* as appropriate.

*Available stress**. Design stress or *allowable stress*, as appropriate.

Average rib width. In a *formed steel deck,* average width of the rib of a corrugation.

Batten plate. Plate rigidly connected to two parallel components of a built-up *column* or *beam* designed to transmit shear between the components.

Beam. Nominally horizontal structural member that has the primary function of resisting bending moments.

Beam-column. Structural member that resists both axial force and bending moment.

Bearing†. In a *connection*, *limit state* of shear forces transmitted by the mechanical *fastener* to the connection elements.

Bearing (local compressive yielding)†. *Limit state* of *local compressive yielding* due to the action of a member bearing against another member or surface.

Bearing-type connection. Bolted *connection* where shear *forces* are transmitted by the bolt bearing against the connection elements.

Block shear rupture†. In a *connection*, *limit state* of tension rupture along one path and shear yielding or shear rupture along another path.

Braced frame†. Essentially vertical truss system that provides resistance to lateral forces and provides stability for the *structural system*.

Bracing. Member or system that provides stiffness and strength to limit the out-of-plane movement of another member at a brace point.

Branch member. In an *HSS connection*, member that terminates at a *chord member* or *main member*.

Buckling†. *Limit state* of sudden change in the geometry of a structure or any of its elements under a critical loading condition.

Buckling strength. Strength for *instability limit states*.

Built-up member, cross section, section, shape. Member, cross section, section or shape fabricated from structural steel elements that are welded or bolted together.

Camber. Curvature fabricated into a *beam* or truss so as to compensate for deflection induced by loads.

Charpy V-notch impact test. Standard dynamic test measuring notch toughness of a specimen.

Chord member. In an *HSS connection*, primary member that extends through a truss connection.

Cladding. Exterior covering of structure.

Cold-formed steel structural member†. Shape manufactured by press-braking blanks sheared from sheets, cut lengths of coils or plates, or by roll forming cold- or hot-rolled coils or sheets; both forming operations being performed at ambient room temperature, that is, without manifest addition of heat such as would be required for hot forming.

Collector. Also known as drag strut; member that serves to transfer loads between floor *diaphragms* and the members of the *lateral force resisting system*.

Column. Nominally vertical structural member that has the primary function of resisting axial compressive force.

Column base. Assemblage of structural shapes, plates, connectors, bolts and rods at the base of a *column* used to transmit forces between the steel superstructure and the foundation.

Compact section. Section capable of developing a fully plastic stress distribution and possessing a *rotation capacity* of approximately three before the onset of *local buckling*.

Compartmentation. Enclosure of a building space with elements that have a specific fire endurance.

Complete-joint-penetration (CJP) groove weld. Groove weld in which weld metal extends through the *joint* thickness, except as permitted for *HSS connections*.

Composite. Condition in which steel and concrete elements and members work as a unit in the distribution of internal forces.

Composite beam. Structural steel *beam* in contact with and acting compositely with a reinforced concrete slab.

Composite component. Member, connecting element or assemblage in which steel and concrete elements work as a unit in the distribution of internal forces, with the exception of the special case of *composite beams* where *steel anchors* are embedded in a solid concrete slab or in a slab cast on *formed steel deck*.

Concrete breakout surface. The surface delineating a volume of concrete surrounding a steel headed stud anchor that separates from the remaining concrete.

Concrete crushing. Limit state of compressive failure in concrete having reached the ultimate strain.

Concrete haunch. In a *composite* floor system constructed using a *formed steel deck,* the section of solid concrete that results from stopping the deck on each side of the *girder.*

Concrete-encased beam. Beam totally encased in concrete cast integrally with the slab.

Connection†. Combination of structural elements and *joints* used to transmit forces between two or more members.

Construction documents. *Design drawings*, *specifications*, shop drawings and erection drawings.

Cope. Cutout made in a structural member to remove a flange and conform to the shape of an intersecting member.

Cover plate. Plate welded or bolted to the flange of a member to increase cross-sectional area, section modulus or moment of inertia.

Cross connection. HSS connection in which forces in *branch members* or connecting elements transverse to the *main member* are primarily equilibrated by forces in other branch members or connecting elements on the opposite side of the main member.

Design-basis fire. Set of conditions that define the development of a *fire* and the spread of combustion products throughout a building or portion thereof.

Design drawings. Graphic and pictorial documents showing the design, location and dimensions of the work. These documents generally include plans, elevations, sections, details, schedules, diagrams and notes.

Design load†. Applied *load* determined in accordance with either *LRFD load combinations* or *ASD load combinations*, whichever is applicable.

*Design strength**†. *Resistance factor* multiplied by the *nominal strength*, ϕR_n.

Design wall thickness. *HSS* wall thickness assumed in the determination of section properties.

Diagonal stiffener. Web stiffener at *column panel zone* oriented diagonally to the flanges, on one or both sides of the web.

Diaphragm†. Roof, floor or other membrane or bracing system that transfers in-plane forces to the *lateral force resisting system*.

Diaphragm plate. Plate possessing in-plane shear stiffness and strength, used to transfer forces to the supporting elements.

Direct analysis method. Design method for stability that captures the effects of residual stresses and initial out-of-plumbness of frames by reducing stiffness and applying *notional loads* in a second-order analysis.

Direct bond interaction. In a *composite* section, mechanism by which force is transferred between steel and concrete by bond stress.

Distortional failure. Limit state of an *HSS* truss *connection* based on distortion of a rectangular *HSS chord member* into a rhomboidal shape.

Distortional stiffness. Out-of-plane flexural stiffness of web.

Double curvature. Deformed shape of a *beam* with one or more inflection points within the span.

Double-concentrated forces. Two equal and opposite forces applied normal to the same flange, forming a couple.

Doubler. Plate added to, and parallel with, a *beam* or *column* web to increase strength at locations of concentrated forces.

Drift. Lateral deflection of structure.

Effective length. Length of an otherwise identical *column* with the same strength when analyzed with pinned end conditions.

Effective length factor, K. Ratio between the *effective length* and the *unbraced length* of the member.

Effective net area. Net area modified to account for the effect of *shear lag*.

Effective section modulus. Section modulus reduced to account for buckling of slender compression elements.

Effective width. Reduced width of a plate or slab with an assumed uniform stress distribution which produces the same effect on the behavior of a structural member as the actual plate or slab width with its nonuniform stress distribution.

Elastic analysis. Structural analysis based on the assumption that the structure returns to its original geometry on removal of the *load*.

Elevated temperatures. Heating conditions experienced by building elements or structures as a result of *fire* which are in excess of the anticipated ambient conditions.

Encased composite member. Composite member consisting of a structural concrete member and one or more embedded steel shapes.

End panel. Web panel with an adjacent panel on one side only.

End return. Length of *fillet weld* that continues around a corner in the same plane.

Engineer of record. Licensed professional responsible for sealing the *design drawings* and *specifications*.

Expansion rocker. Support with curved surface on which a member bears that can tilt to accommodate expansion.

Expansion roller. Round steel bar on which a member bears that can roll to accommodate expansion.

Eyebar. Pin-connected tension member of uniform thickness, with forged or thermally cut head of greater width than the body, proportioned to provide approximately equal strength in the head and body.

Factored load †. Product of a *load factor* and the *nominal load.*

Fastener. Generic term for bolts, rivets or other connecting devices.

Fatigue†. *Limit state* of crack initiation and growth resulting from repeated application of live *loads*.

Faying surface. Contact surface of *connection* elements transmitting a shear force.

Filled composite member. Composite member consisting of a shell of *HSS* filled with structural concrete.

Filler. Plate used to build up the thickness of one component.

Filler metal. Metal or alloy added in making a welded *joint*.

Fillet weld. Weld of generally triangular cross section made between intersecting surfaces of elements.

Fillet weld reinforcement. Fillet welds added to *groove welds*.

Finished surface. Surfaces fabricated with a roughness height value measured in accordance with ANSI/ASME B46.1 that is equal to or less than 500.

Fire. Destructive burning, as manifested by any or all of the following: light, flame, heat or smoke.

Fire barrier. Element of construction formed of fire-resisting materials and tested in accordance with an approved standard *fire resistance* test, to demonstrate compliance with the *applicable building code*.

Fire resistance. Property of assemblies that prevents or retards the passage of excessive heat, hot gases or flames under conditions of use and enables them to continue to perform a stipulated function.

First-order analysis. Structural analysis in which equilibrium conditions are formulated on the undeformed structure; *second-order effects* are neglected.

Fitted bearing stiffener. Stiffener used at a support or concentrated *load* that fits tightly against one or both flanges of a *beam* so as to transmit load through bearing.

Flare bevel groove weld. Weld in a groove formed by a member with a curved surface in contact with a planar member.

Flare V-groove weld. Weld in a groove formed by two members with curved surfaces.

Flashover. Transition to a state of total surface involvement in a fire of combustible materials within an enclosure.

Flat width. Nominal width of rectangular *HSS* minus twice the outside corner radius. In the absence of knowledge of the corner radius, the flat width may be taken as the total section width minus three times the thickness.

Flexural buckling†. *Buckling* mode in which a compression member deflects laterally without twist or change in cross-sectional shape.

Flexural-torsional buckling†. Buckling mode in which a compression member bends and twists simultaneously without change in cross-sectional shape.

Force. Resultant of distribution of stress over a prescribed area.

Formed section. See *cold-formed steel structural member.*

Formed steel deck. In *composite* construction, steel cold formed into a decking profile used as a permanent concrete form.

Fully restrained moment connection. Connection capable of transferring moment with negligible rotation between connected members.

Gage. Transverse center-to-center spacing of *fasteners*.

Gapped connection. HSS truss *connection* with a gap or space on the *chord* face between intersecting *branch members.*

Geometric axis. Axis parallel to web, flange or angle leg.

Girder. See *Beam*.

Girder filler. In a *composite* floor system constructed using a *formed steel deck,* narrow piece of *sheet steel* used as a fill between the edge of a deck sheet and the flange of a *girder*.

Gouge. Relatively smooth surface groove or cavity resulting from plastic deformation or removal of material.

Gravity load. Load acting in the downward direction, such as dead and live loads.

Grip (of bolt). Thickness of material through which a bolt passes.

Groove weld. Weld in a groove between *connection* elements. See also AWS D1.1/D1.1M.

Gusset plate. Plate element connecting truss members or a strut or brace to a *beam* or *column*.

Heat flux. Radiant energy per unit surface area.

Heat release rate. Rate at which thermal energy is generated by a burning material.

High-strength bolt. Fastener in compliance with ASTM A325, A325M, A490, A490M, F1852, F2280 or an alternate fastener as permitted in Section J3.1.

Horizontal shear. In a *composite beam, force* at the interface between steel and concrete surfaces.

HSS. Square, rectangular or round hollow structural steel section produced in accordance with a *pipe* or *tubing* product *specification.*

Inelastic analysis. Structural analysis that takes into account inelastic material behavior, including *plastic analysis*.

In-plane instability†. *Limit state* involving *buckling* in the plane of the frame or the member.

Instability†. *Limit state* reached in the loading of a structural component, frame or structure in which a slight disturbance in the *loads* or geometry produces large displacements.

Introduction length. In an *encased composite column*, the length along which the *column force* is assumed to be transferred into or out of the steel shape.

Joint†. Area where two or more ends, surfaces or edges are attached. Categorized by type of *fastener* or weld used and method of *force* transfer.

Joint eccentricity. In an *HSS* truss *connection*, perpendicular distance from *chord member* center of gravity to intersection of *branch member* work points.

k-area. The region of the web that extends from the tangent point of the web and the flange-web fillet (AISC k dimension) a distance $1^1/_2$ in. (38 mm) into the web beyond the k dimension.

K-connection. HSS connection in which forces in *branch members* or connecting elements transverse to the *main member* are primarily equilibriated by *forces* in other branch members or connecting elements on the same side of the main member.

Lacing. Plate, angle or other steel shape, in a lattice configuration, that connects two steel shapes together.

Lap joint. Joint between two overlapping *connection* elements in parallel planes.

Lateral bracing. Member or system that is designed to inhibit lateral *buckling* or *lateral-torsional buckling* of structural members.

Lateral force resisting system. Structural system designed to resist lateral loads and provide *stability* for the structure as a whole.

Lateral load. Load acting in a lateral direction, such as wind or earthquake effects.

Lateral-torsional buckling†. *Buckling* mode of a flexural member involving deflection out of the plane of bending occurring simultaneously with twist about the shear center of the cross section.

Leaning column. Column designed to carry *gravity loads* only, with *connections* that are not intended to provide resistance to *lateral loads.*

Length effects. Consideration of the reduction in strength of a member based on its *unbraced length*.

Lightweight concrete. Structural concrete with an equilibrium density of 115 lb/ft^3 (1840 kg/m^3) or less as determined by ASTM C567.

Limit state†. Condition in which a structure or component becomes unfit for service and is judged either to be no longer useful for its intended function (*serviceability limit state*) or to have reached its ultimate load-carrying capacity (*strength limit state*).

Load†. *Force* or other action that results from the weight of building materials, occupants and their possessions, environmental effects, differential movement or restrained dimensional changes.

Load effect†. *Forces*, *stresses* and deformations produced in a *structural component* by the applied *loads*.

Load factor†. Factor that accounts for deviations of the *nominal load* from the actual *load*, for uncertainties in the analysis that transforms the load into a *load effect* and for the probability that more than one extreme load will occur simultaneously.

*Local bending*** †. *Limit state* of large deformation of a flange under a concentrated transverse force.

*Local buckling***. *Limit state* of *buckling* of a compression element within a cross section.

*Local yielding***†. *Yielding* that occurs in a local area of an element.

LRFD (load and resistance factor design)†. Method of proportioning *structural components* such that the *design strength* equals or exceeds the *required strength* of the component under the action of the *LRFD load combinations*.

LRFD load combination†. Load combination in the *applicable building code* intended for strength design (*load and resistance factor design).*

Main member. In an *HSS connection*, *chord member*, *column* or other HSS member to which *branch members* or other connecting elements are attached.

Mechanism. Structural system that includes a sufficient number of real hinges, *plastic hinges* or both, so as to be able to articulate in one or more rigid body modes.

Mill scale. Oxide surface coating on steel formed by the hot rolling process.

Moment connection. Connection that transmits bending moment between connected members.

Moment frame†. Framing system that provides resistance to lateral loads and provides stability to the *structural system*, primarily by shear and flexure of the framing members and their *connections*.

Negative flexural strength. Flexural strength of a *composite beam* in regions with tension due to flexure on the top surface.

Net area. Gross area reduced to account for removed material.

Nodal brace. Brace that prevents lateral movement or twist independently of other braces at adjacent brace points (see *relative brace*).

Nominal dimension. Designated or theoretical dimension, as in tables of section properties.

Nominal load†. Magnitude of the *load* specified by the *applicable building code*.

Nominal rib height. In a *formed steel deck,* height of deck measured from the underside of the lowest point to the top of the highest point.

*Nominal strength**†. Strength of a structure or component (without the *resistance factor* or *safety factor* applied*)* to resist *load effects*, as determined in accordance with this *Specification.*

Noncompact section. Section that can develop the *yield stress* in its compression elements before *local buckling* occurs, but cannot develop a *rotation capacity* of three.

Nondestructive testing. Inspection procedure wherein no material is destroyed and the integrity of the material or component is not affected.

Notch toughness. Energy absorbed at a specified temperature as measured in the *Charpy V-notch impact test*.

Notional load. Virtual *load* applied in a *structural analysis* to account for destabilizing effects that are not otherwise accounted for in the design provisions.

Out-of-plane buckling†. *Limit state* of a *beam*, *column* or *beam-column* involving lateral or *lateral-torsional buckling*.

Overlapped connection. HSS truss *connection* in which intersecting *branch members* overlap.

Panel zone. Web area of *beam-to-column connection* delineated by the extension of beam and column flanges through the connection, transmitting moment through a shear panel.

Partial-joint-penetration (PJP) groove weld. *Groove weld* in which the penetration is intentionally less than the complete thickness of the connected element.

Partially restrained moment connection. Connection capable of transferring moment with rotation between connected members that is not negligible.

Percent elongation. Measure of ductility, determined in a tensile test as the maximum elongation of the gage length divided by the original gage length expressed as a percentage.

Pipe. See *HSS*.

Pitch. Longitudinal center-to-center spacing of *fasteners*. Center-to-center spacing of bolt threads along axis of bolt.

Plastic analysis. Structural analysis based on the assumption of rigid-plastic behavior, that is, that equilibrium is satisfied and the *stress* is at or below the *yield stress* throughout the structure.

Plastic hinge. Fully yielded zone that forms in a structural member when the *plastic moment* is attained.

Plastic moment. Theoretical resisting moment developed within a fully yielded cross section.

Plastic stress distribution method. In a *composite* member, method for determining *stresses* assuming that the steel section and the concrete in the cross section are fully plastic.

Plastification. In an *HSS connection*, *limit state* based on an out-of-plane flexural yield line *mechanism* in the *chord* at a *branch member* connection.

Plate girder. Built-up *beam*.

Plug weld. Weld made in a circular hole in one element of a *joint* fusing that element to another element.

Ponding. Retention of water due solely to the deflection of flat roof framing.

Positive flexural strength. Flexural strength of a *composite beam* in regions with compression due to flexure on the top surface.

Pretensioned bolt. Bolt tightened to the specified minimum pretension.

Pretensioned joint. Joint with high-strength bolts tightened to the specified minimum pretension.

Properly developed. Reinforcing bars detailed to yield in a ductile manner before crushing of the concrete occurs. Bars meeting the provisions of ACI 318, insofar as development length, spacing and cover, are deemed to be properly developed.

Prying action. Amplification of the tension force in a bolt caused by leverage between the point of applied *load*, the bolt and the reaction of the connected elements.

Punching load. In an *HSS connection*, component of *branch member* force perpendicular to a *chord*.

P-δ effect. Effect of *loads* acting on the deflected shape of a member between joints or nodes.

P-Δ effect. Effect of *loads* acting on the displaced location of joints or nodes in a structure. In tiered building structures, this is the effect of loads acting on the laterally displaced location of floors and roofs.

Quality assurance. Monitoring and inspection tasks performed by an agency or firm other than the fabricator or erector to ensure that the material provided and work performed by the fabricator and erector meet the requirements of the approved *construction documents* and referenced standards. *Quality assurance* includes those tasks designated "special inspection" by the *applicable building code*.

Quality assurance inspector (QAI). Individual designated to provide *quality assurance* inspection for the work being performed.

Quality assurance plan (QAP). Program in which the agency or firm responsible for *quality assurance* maintains detailed monitoring and inspection procedures to ensure conformance with the approved *construction documents* and referenced standards.

Quality control. Controls and inspections implemented by the fabricator or erector, as applicable, to ensure that the material provided and work performed meet the requirements of the approved *construction documents* and referenced standards.

Quality control inspector (QCI). Individual designated to perform *quality control* inspection tasks for the work being performed.

Quality control program (QCP). Program in which the fabricator or erector, as applicable, maintains detailed fabrication or erection and inspection procedures to ensure conformance with the approved *design drawings*, *specifications* and referenced standards.

Reentrant. In a *cope* or weld access hole, a cut at an abrupt change in direction in which the exposed surface is concave.

Relative brace. Brace that controls the relative movement of two adjacent brace points along the length of a *beam* or *column* or the relative lateral displacement of two stories in a frame (see *nodal brace*).

*Required strength**†. *Forces*, *stresses* and deformations acting on a *structural component*, determined by either *structural analysis*, for the *LRFD* or *ASD load combinations*, as appropriate, or as specified by this *Specification* or Standard.

Resistance factor ϕ†. Factor that accounts for unavoidable deviations of the *nominal strength* from the actual strength and for the manner and consequences of failure.

Restrained construction. Floor and roof assemblies and individual *beams* in buildings where the surrounding or supporting structure is capable of resisting substantial thermal expansion throughout the range of anticipated *elevated temperatures*.

Reverse curvature. See *double curvature.*

Root of joint. Portion of a *joint* to be welded where the members are closest to each other.

Rotation capacity. Incremental angular rotation that a given shape can accept prior to excessive *load* shedding, defined as the ratio of the inelastic rotation attained to the idealized elastic rotation at first yield.

Rupture strength†. Strength limited by breaking or tearing of members or connecting elements.

Safety factor, Ω†. Factor that accounts for deviations of the actual strength from the *nominal strength*, deviations of the actual *load* from the *nominal load*, uncertainties in the analysis that transforms the load into a *load effect*, and for the manner and consequences of failure.

Second-order effect. Effect of *loads* acting on the deformed configuration of a structure; includes *P*-δ *effect* and *P*-Δ *effect*.

Seismic response modification factor. Factor that reduces seismic *load effects* to strength level.

Service load†. *Load* under which *serviceability limit states* are evaluated.

Service load combination. Load combination under which *serviceability limit states* are evaluated.

Serviceability limit state†. Limiting condition affecting the ability of a structure to preserve its appearance, maintainability, durability or the comfort of its occupants or function of machinery, under normal usage.

Shear buckling†. *Buckling* mode in which a plate element, such as the web of a *beam*, deforms under pure shear applied in the plane of the plate.

Shear lag. Nonuniform tensile stress distribution in a member or connecting element in the vicinity of a *connection*.

Shear wall†. Wall that provides resistance to *lateral loads* in the plane of the wall and provides *stability* for the *structural system*.

Shear yielding (punching). In an *HSS connection*, *limit state* based on out-of-plane shear strength of the *chord* wall to which *branch members* are attached.

Sheet steel. In a *composite* floor system, steel used for closure plates or miscellaneous trimming in a *formed steel deck*.

Shim. Thin layer of material used to fill a space between faying or bearing surfaces.

Sidesway buckling (frame). Stability limit state involving lateral sidesway *instability* of a frame.

Simple connection. Connection that transmits negligible bending moment between connected members.

Single-concentrated force. Tensile or compressive force applied normal to the flange of a member.

Single curvature. Deformed shape of a *beam* with no inflection point within the span.

Slender-element section. Cross section possessing plate components of sufficient slenderness such that *local buckling* in the elastic range will occur.

Slip. In a bolted *connection*, *limit state* of relative motion of connected parts prior to the attainment of the *available strength* of the connection.

Slip-critical connection. Bolted *connection* designed to resist movement by friction on the faying surface of the connection under the clamping force of the bolts.

Slot weld. Weld made in an elongated hole fusing an element to another element.

Snug-tightened joint. Joint with the connected plies in firm contact as specified in Chapter J.

Specifications. Written documents containing the requirements for materials, standards and workmanship.

Specified minimum tensile strength. Lower limit of *tensile strength* specified for a material as defined by ASTM.

Specified minimum yield stress†. Lower limit of *yield stress* specified for a material as defined by ASTM.

Splice. Connection between two structural elements joined at their ends to form a single, longer element.

Stability. Condition in the loading of a structural component, frame or structure in which a slight disturbance in the *loads* or geometry does not produce large displacements.

Statically loaded. Not subject to significant fatigue stresses. Gravity, wind and seismic loadings are considered to be static loadings.

Steel anchor. Headed stud or hot rolled channel welded to a steel member and embodied in concrete of a *composite member* to transmit shear, tension or a combination of shear and tension at the interface of the two materials.

Stiffened element. Flat compression element with adjoining out-of-plane elements along both edges parallel to the direction of loading.

Stiffener. Structural element, usually an angle or plate, attached to a member to distribute *load*, transfer shear or prevent *buckling*.

Stiffness. Resistance to deformation of a member or structure, measured by the ratio of the applied *force* (or moment) to the corresponding displacement (or rotation).

Strain compatibility method. In a *composite* member, method for determining the *stresses* considering the stress-strain relationships of each material and its location with respect to the neutral axis of the cross section.

Strength limit state†. Limiting condition in which the maximum strength of a structure or its components is reached.

Stress. Force per unit area caused by axial *force*, moment, shear or torsion.

Stress concentration. Localized *stress* considerably higher than average due to abrupt changes in geometry or localized loading.

Strong axis. Major principal centroidal axis of a cross section.

Structural analysis†. Determination of *load effects* on members and *connections* based on principles of structural mechanics.

Structural component†. Member, connector, connecting element or assemblage.

Structural steel. Steel elements as defined in Section 2.1 of the AISC *Code of Standard Practice for Steel Buildings and Bridges*.

Structural system. An assemblage of load-carrying components that are joined together to provide interaction or interdependence.

T-connection. HSS connection in which the *branch member* or connecting element is perpendicular to the *main member* and in which forces transverse to the main member are primarily equilibriated by shear in the main member.

Tensile strength (of material)†. Maximum tensile *stress* that a material is capable of sustaining as defined by ASTM.

Tensile strength (of member). Maximum tension *force* that a member is capable of sustaining.

Tension and shear rupture†. In a bolt or other type of mechanical *fastener*, *limit state* of rupture due to simultaneous tension and shear *force*.

Tension field action. Behavior of a panel under shear in which diagonal tensile forces develop in the web and compressive forces develop in the *transverse stiffeners* in a manner similar to a Pratt truss.

Thermally cut. Cut with gas, plasma or laser.

Tie plate. Plate element used to join two parallel components of a *built-up column*, *girder* or strut rigidly connected to the parallel components and designed to transmit shear between them.

Toe of fillet. Junction of a fillet weld face and base metal. Tangent point of a fillet in a rolled shape.

Torsional bracing. Bracing resisting twist of a *beam* or *column*.

Torsional buckling†. *Buckling* mode in which a compression member twists about its shear center axis.

Transverse reinforcement. In an *encased composite column,* steel reinforcement in the form of closed ties or welded wire fabric providing confinement for the concrete surrounding the steel shape.

Transverse stiffener. Web *stiffener* oriented perpendicular to the flanges, attached to the web.

Tubing. See *HSS*.

Turn-of-nut method. Procedure whereby the specified pretension in high-strength bolts is controlled by rotating the *fastener* component a predetermined amount after the bolt has been snug tightened.

Unbraced length. Distance between braced points of a member, measured between the centers of gravity of the bracing members.

Uneven load distribution. In an *HSS connection*, condition in which the *load* is not distributed through the cross section of connected elements in a manner that can be readily determined.

Unframed end. The end of a member not restrained against rotation by *stiffeners* or *connection elements*.

Unrestrained construction. Floor and roof assemblies and individual *beams* in buildings that are assumed to be free to rotate and expand throughout the range of anticipated *elevated temperatures*.

Unstiffened element. Flat compression element with an adjoining out-of-plane element along one edge parallel to the direction of loading.

Weak axis. Minor principal centroidal axis of a cross section.

Weathering steel. High-strength, low-alloy steel that, with suitable precautions, can be used in normal atmospheric exposures (not marine) without protective paint coating.

Web crippling†. *Limit* state of local failure of web plate in the immediate vicinity of a concentrated *load* or reaction.

Web sidesway buckling. *Limit state* of lateral *buckling* of the tension flange opposite the location of a concentrated compression *force.*

Weld metal. Portion of a fusion weld that has been completely melted during welding. Weld metal has elements of filler metal and base metal melted in the weld thermal cycle.

Weld root. See *root of joint*.

Y-connection. HSS connection in which the *branch member* or connecting element is not perpendicular to the *main member* and in which forces transverse to the main member are primarily equilibriated by shear in the main member.

Yield moment†. In a member subjected to bending, the moment at which the extreme outer fiber first attains the *yield stress.*

Yield point†. First *stress* in a material at which an increase in strain occurs without an increase in stress as defined by ASTM.

Yield strength†. *Stress* at which a material exhibits a specified limiting deviation from the proportionality of stress to strain as defined by ASTM.

Yield stress†. Generic term to denote either *yield point* or *yield strength*, as appropriate for the material.

Yielding†. *Limit state* of inelastic deformation that occurs when the *yield stress* is reached.

Yielding (plastic moment)†. *Yielding* throughout the cross section of a member as the bending moment reaches the *plastic moment.*

Yielding (yield moment)†. *Yielding* at the extreme fiber on the cross section of a member when the bending moment reaches the *yield moment.*

CHAPTER A
GENERAL PROVISIONS

This chapter states the scope of the Specification, summarizes referenced *specifications*, codes and standards, and provides requirements for materials and structural design documents.

The chapter is organized as follows:

A1. Scope
A2. Referenced Specifications, Codes and Standards
A3. Material
A4. Structural Design Drawings and Specifications

A1. SCOPE

The *Specification for Structural Steel Buildings* (ANSI/AISC 360), hereafter referred to as the Specification, shall apply to the design of the *structural steel* system or systems with structural steel acting compositely with reinforced concrete, where the steel elements are defined in the AISC *Code of Standard Practice for Steel Buildings and Bridges*, Section 2.1, hereafter referred to as the *Code of Standard Practice*.

This Specification includes the Symbols, the Glossary, Chapters A through N, and Appendices 1 through 8. The Commentary and the User Notes interspersed throughout are not part of the Specification.

User Note: User notes are intended to provide concise and practical guidance in the application of the provisions.

This Specification sets forth criteria for the design, fabrication and erection of structural steel buildings and other structures, where other structures are defined as structures designed, fabricated and erected in a manner similar to buildings, with building-like vertical and *lateral load* resisting-elements.

Wherever this Specification refers to the *applicable building code* and there is none, the *loads*, load combinations, system limitations, and general design requirements shall be those in ASCE/SEI 7.

Where conditions are not covered by the Specification, designs are permitted to be based on tests or analysis, subject to the approval of the *authority having jurisdiction*.

Alternative methods of analysis and design are permitted, provided such alternative methods or criteria are acceptable to the authority having jurisdiction.

User Note: For the design of structural members, other than hollow structural sections (*HSS*) that are cold-formed to shapes with elements not more than 1 in. (25 mm) in thickness, the provisions of the AISI *North American Specification for the Design of Cold-Formed Steel Structural Members* are recommended.

1. Seismic Applications

The *Seismic Provisions for Structural Steel Buildings* (ANSI/AISC 341) shall apply to the design of seismic *force* resisting systems of *structural steel* or of structural steel acting compositely with reinforced concrete, unless specifically exempted by the *applicable building code*.

User Note: ASCE/SEI 7 (Table 12.2-1, Item H) specifically exempts structural steel systems, but not *composite* systems, in seismic design categories B and C if they are designed according to the *Specification* and the seismic *loads* are computed using a *seismic response modification factor*, *R*, of 3. For seismic design category A, ASCE/SEI 7 does specify lateral forces to be used as the seismic loads and effects, but these calculations do not involve the use of an *R* factor. Thus for seismic design category A it is not necessary to define a seismic force resisting system that meets any special requirements and the *Seismic Provisions for Structural Steel Buildings* do not apply.

The provisions of Appendix 1 of this Specification shall not apply to the seismic design of buildings and other structures.

2. Nuclear Applications

The design, fabrication and erection of nuclear structures shall comply with the requirements of the *Specification for Safety-Related Steel Structures for Nuclear Facilities* (ANSI/AISC N690), in addition to the provisions of this Specification.

A2. REFERENCED SPECIFICATIONS, CODES AND STANDARDS

The following *specifications*, codes and standards are referenced in this Specification:

ACI International (ACI)

ACI 318-08 *Building Code Requirements for Structural Concrete and Commentary*
ACI 318M-08 *Metric Building Code Requirements for Structural Concrete and Commentary*
ACI 349-06 *Code Requirements for Nuclear Safety-Related Concrete Structures and Commentary*

American Institute of Steel Construction (AISC)

AISC 303-10 *Code of Standard Practice for Steel Buildings and Bridges*
ANSI/AISC 341-10 *Seismic Provisions for Structural Steel Buildings*
ANSI/AISC N690-06 *Specification for Safety-Related Steel Structures for Nuclear Facilities*

American Society of Civil Engineers (ASCE)

ASCE/SEI 7-10 *Minimum Design Loads for Buildings and Other Structures*
ASCE/SEI/SFPE 29-05 *Standard Calculation Methods for Structural Fire Protection*

American Society of Mechanical Engineers (ASME)

ASME B18.2.6-06 *Fasteners for Use in Structural Applications*
ASME B46.1-02 *Surface Texture, Surface Roughness, Waviness, and Lay*

American Society for Nondestructive Testing (ASNT)

ANSI/ASNT CP-189-2006 *Standard for Qualification and Certification of Nondestructive Testing Personnel*
Recommended Practice No. SNT-TC-1A-2006 *Personnel Qualification and Certification in Nondestructive Testing*

ASTM International (ASTM)

A6/A6M-09 *Standard Specification for General Requirements for Rolled Structural Steel Bars, Plates, Shapes, and Sheet Piling*
A36/A36M-08 *Standard Specification for Carbon Structural Steel*
A53/A53M-07 *Standard Specification for Pipe, Steel, Black and Hot-Dipped, Zinc-Coated, Welded and Seamless*
A193/A193M-08b *Standard Specification for Alloy-Steel and Stainless Steel Bolting Materials for High Temperature or High Pressure Service and Other Special Purpose Applications*
A194/A194M-09 *Standard Specification for Carbon and Alloy Steel Nuts for Bolts for High Pressure or High Temperature Service, or Both*
A216/A216M-08 *Standard Specification for Steel Castings, Carbon, Suitable for Fusion Welding, for High Temperature Service*
A242/A242M-04(2009) *Standard Specification for High-Strength Low-Alloy Structural Steel*
A283/A283M-03(2007) *Standard Specification for Low and Intermediate Tensile Strength Carbon Steel Plates*
A307-07b *Standard Specification for Carbon Steel Bolts and Studs, 60,000 PSI Tensile Strength*
A325-09 *Standard Specification for Structural Bolts, Steel, Heat Treated, 120/105 ksi Minimum Tensile Strength*
A325M-09 *Standard Specification for Structural Bolts, Steel, Heat Treated 830 MPa Minimum Tensile Strength (Metric)*
A354-07a *Standard Specification for Quenched and Tempered Alloy Steel Bolts, Studs, and Other Externally Threaded Fasteners*
A370-09 *Standard Test Methods and Definitions for Mechanical Testing of Steel Products*
A449-07b *Standard Specification for Hex Cap Screws, Bolts and Studs, Steel, Heat Treated, 120/105/90 ksi Minimum Tensile Strength, General Use*
A490-08b *Standard Specification for Heat-Treated Steel Structural Bolts, Alloy Steel, Heat Treated, 150 ksi Minimum Tensile Strength*
A490M-08 *Standard Specification for High-Strength Steel Bolts, Classes 10.9 and 10.9.3, for Structural Steel Joints (Metric)*

A500/A500M-07 *Standard Specification for Cold-Formed Welded and Seamless Carbon Steel Structural Tubing in Rounds and Shapes*

A501-07 *Standard Specification for Hot-Formed Welded and Seamless Carbon Steel Structural Tubing*

A502-03 *Standard Specification for Steel Structural Rivets, Steel, Structural*

A514/A514M-05 *Standard Specification for High-Yield Strength, Quenched and Tempered Alloy Steel Plate, Suitable for Welding*

A529/A529M-05 *Standard Specification for High-Strength Carbon-Manganese Steel of Structural Quality*

A563-07a *Standard Specification for Carbon and Alloy Steel Nuts*

A563M-07 *Standard Specification for Carbon and Alloy Steel Nuts [Metric]*

A568/A568M-09 *Standard Specification for Steel, Sheet, Carbon, Structural, and High-Strength, Low-Alloy, Hot-Rolled and Cold-Rolled, General Requirements for*

A572/A572M-07 *Standard Specification for High-Strength Low-Alloy Columbium-Vanadium Structural Steel*

A588/A588M-05 *Standard Specification for High-Strength Low-Alloy Structural Steel, up to 50 ksi [345 MPa] Minimum Yield Point, with Atmospheric Corrosion Resistance*

A606/A606M-09 *Standard Specification for Steel, Sheet and Strip, High-Strength, Low-Alloy, Hot-Rolled and Cold-Rolled, with Improved Atmospheric Corrosion Resistance*

A618/A618M-04 *Standard Specification for Hot-Formed Welded and Seamless High-Strength Low-Alloy Structural Tubing*

A668/A668M-04 *Standard Specification for Steel Forgings, Carbon and Alloy, for General Industrial Use*

A673/A673M-04 *Standard Specification for Sampling Procedure for Impact Testing of Structural Steel*

A709/A709M-09 *Standard Specification for Structural Steel for Bridges*

A751-08 *Standard Test Methods, Practices, and Terminology for Chemical Analysis of Steel Products*

A847/A847M-05 *Standard Specification for Cold-Formed Welded and Seamless High-Strength, Low-Alloy Structural Tubing with Improved Atmospheric Corrosion Resistance*

A852/A852M-03(2007) *Standard Specification for Quenched and Tempered Low-Alloy Structural Steel Plate with 70 ksi [485 MPa] Minimum Yield Strength to 4 in. [100 mm] Thick*

A913/A913M-07 *Standard Specification for High-Strength Low-Alloy Steel Shapes of Structural Quality, Produced by Quenching and Self-Tempering Process (QST)*

A992/A992M-06a *Standard Specification for Structural Steel Shapes*

User Note: ASTM A992 is the most commonly referenced specification for W-shapes.

A1011/A1011M-09a *Standard Specification for Steel, Sheet and Strip, Hot-Rolled, Carbon, Structural, High-Strength Low-Alloy, High-Strength Low-Alloy with Improved Formability, and Ultra-High Strength*

A1043/A1043M-05 *Standard Specification for Structural Steel with Low Yield to Tensile Ratio for Use in Buildings*

C567-05a *Standard Test Method for Determining Density of Structural Lightweight Concrete*

E119-08a *Standard Test Methods for Fire Tests of Building Construction and Materials*

E165-02 *Standard Test Method for Liquid Penetrant Examination*

E709-08 *Standard Guide for Magnetic Particle Examination*

F436-09 *Standard Specification for Hardened Steel Washers*

F436M-09 *Standard Specification for Hardened Steel Washers (Metric)*

F606-07 *Standard Test Methods for Determining the Mechanical Properties of Externally and Internally Threaded Fasteners, Washers, Direct Tension Indicators, and Rivets*

F606M-07 *Standard Test Methods for Determining the Mechanical Properties of Externally and Internally Threaded Fasteners, Washers, and Rivets (Metric)*

F844-07a *Standard Specification for Washers, Steel, Plain (Flat), Unhardened for General Use*

F959-09 *Standard Specification for Compressible-Washer-Type Direct Tension Indicators for Use with Structural Fasteners*

F959M-07 *Standard Specification for Compressible-Washer-Type Direct Tension Indicators for Use with Structural Fasteners (Metric)*

F1554-07a *Standard Specification for Anchor Bolts, Steel, 36, 55, and 105 ksi Yield Strength*

User Note: ASTM F1554 is the most commonly referenced specification for anchor rods. Grade and weldability must be specified.

F1852-08 *Standard Specification for "Twist-Off" Type Tension Control Structural Bolt/Nut/Washer Assemblies, Steel, Heat Treated, 120/105 ksi Minimum Tensile Strength*

F2280-08 *Standard Specification for "Twist Off" Type Tension Control Structural Bolt/Nut/Washer Assemblies, Steel, Heat Treated, 150 ksi Minimum Tensile Strength*

American Welding Society (AWS)

AWS A5.1/A5.1M-2004 *Specification for Carbon Steel Electrodes for Shielded Metal Arc Welding*

AWS A5.5/A5.5M-2004 *Specification for Low-Alloy Steel Electrodes for Shielded Metal Arc Welding*

AWS A5.17/A5.17M-1997 (R2007) *Specification for Carbon Steel Electrodes and Fluxes for Submerged Arc Welding*

AWS A5.18/A5.18M-2005 *Specification for Carbon Steel Electrodes and Rods for Gas Shielded Arc Welding*

AWS A5.20/A5.20M-2005 *Specification for Carbon Steel Electrodes for Flux Cored Arc Welding*

AWS A5.23/A5.23M-2007 *Specification for Low-Alloy Steel Electrodes and Fluxes for Submerged Arc Welding*

AWS A5.25/A5.25M-1997 (R2009) *Specification for Carbon and Low-Alloy Steel Electrodes and Fluxes for Electroslag Welding*

AWS A5.26/A5.26M-1997 (R2009) *Specification for Carbon and Low-Alloy Steel Electrodes for Electrogas Welding*

AWS A5.28/A5.28M-2005 *Specification for Low-Alloy Steel Electrodes and Rods for Gas Shielded Arc Welding*
AWS A5.29/A5.29M-2005 *Specification for Low-Alloy Steel Electrodes for Flux Cored Arc Welding*
AWS A5.32/A5.32M-1997 (R2007) *Specification for Welding Shielding Gases*
AWS B5.1-2003 *Specification for the Qualification of Welding Inspectors*
AWS D1.1/D1.1M-2010 *Structural Welding Code—Steel*
AWS D1.3 -2008 *Structural Welding Code—Sheet Steel*

Research Council on Structural Connections (RCSC)

Specification for Structural Joints Using High-Strength Bolts, 2009

A3. MATERIAL

1. Structural Steel Materials

Material test reports or reports of tests made by the fabricator or a testing laboratory shall constitute sufficient evidence of conformity with one of the ASTM standards listed in Section A3.1a. For hot-rolled structural shapes, plates, and bars, such tests shall be made in accordance with ASTM A6/A6M; for sheets, such tests shall be made in accordance with ASTM A568/A568M; for *tubing* and *pipe*, such tests shall be made in accordance with the requirements of the applicable ASTM standards listed above for those product forms.

1a. ASTM Designations

Structural steel material conforming to one of the following ASTM *specifications* is approved for use under this Specification:

(1) Hot-rolled structural shapes

ASTM A36/A36M	ASTM A709/A709M
ASTM A529/A529M	ASTM A913/A913M
ASTM A572/A572M	ASTM A992/ A992M
ASTM A588/A588M	ASTM A1043/A1043M

(2) Structural tubing

ASTM A500	ASTM A618/A618M
ASTM A501	ASTM A847/A847M

(3) Pipe
ASTM A53/A53M, Gr. B

(4) Plates

ASTM A36/A36M	ASTM A588/A588M
ASTM A242/A242M	ASTM A709/A709M
ASTM A283/A283M	ASTM A852/A852M
ASTM A514/A514M	ASTM A1011/A1011M
ASTM A529/A529M	ASTM A1043/A1043M
ASTM A572/A572M	

(5) Bars

ASTM A36/A36M	ASTM A572/A572M
ASTM A529/A529M	ASTM A709/A709M

(6) Sheets
ASTM A606/A606M
ASTM A1011/A1011M SS, HSLAS, AND HSLAS-F

1b. Unidentified Steel

Unidentified steel, free of injurious defects, is permitted to be used only for members or details whose failure will not reduce the strength of the structure, either locally or overall. Such use shall be subject to the approval of the *engineer of record*.

User Note: Unidentified steel may be used for details where the precise mechanical properties and weldability are not of concern. These are commonly curb plates, *shims* and other similar pieces.

1c. Rolled Heavy Shapes

ASTM A6/A6M hot-rolled shapes with a flange thickness exceeding 2 in. (50 mm) are considered to be rolled heavy shapes. Rolled heavy shapes used as members subject to primary (computed) tensile *forces* due to tension or flexure and spliced or connected using *complete-joint-penetration groove welds* that fuse through the thickness of the flange or the flange and the web, shall be specified as follows. The structural design documents shall require that such shapes be supplied with *Charpy V-notch (CVN) impact test* results in accordance with ASTM A6/A6M, Supplementary Requirement S30, *Charpy V-Notch Impact Test for Structural Shapes – Alternate Core Location*. The impact test shall meet a minimum average value of 20 ft-lb (27 J) absorbed energy at a maximum temperature of +70 °F (+21 °C).

The above requirements do not apply if the *splices* and *connections* are made by bolting. Where a rolled heavy shape is welded to the surface of another shape using groove welds, the requirement above applies only to the shape that has *weld metal* fused through the cross section.

User Note: Additional requirements for joints in heavy rolled members are given in Sections J1.5, J1.6, J2.6 and M2.2.

1d. Built-Up Heavy Shapes

Built-up cross sections consisting of plates with a thickness exceeding 2 in. (50 mm) are considered built-up heavy shapes. Built-up heavy shapes used as members subject to primary (computed) tensile *forces* due to tension or flexure and spliced or connected to other members using *complete-joint-penetration groove welds* that fuse through the thickness of the plates, shall be specified as follows. The structural design documents shall require that the steel be supplied with *Charpy V-notch impact test* results in accordance with ASTM A6/A6M, Supplementary Requirement S5, *Charpy V-Notch Impact Test.* The impact test shall be conducted in accordance with ASTM A673/A673M, Frequency P, and shall meet a minimum average value of 20 ft-lb (27 J) absorbed energy at a maximum temperature of +70 °F (+21 °C).

When a built-up heavy shape is welded to the face of another member using groove welds, the requirement above applies only to the shape that has *weld metal* fused through the cross section.

User Note: Additional requirements for joints in heavy *built-up members* are given in Sections J1.5, J1.6, J2.6 and M2.2.

2. Steel Castings and Forgings

Steel castings shall conform to ASTM A216/A216M, Grade WCB with Supplementary Requirement S11. Steel forgings shall conform to ASTM A668/A668M. Test reports produced in accordance with the above reference standards shall constitute sufficient evidence of conformity with such standards.

3. Bolts, Washers and Nuts

Bolt, washer and nut material conforming to one of the following ASTM *specifications* is approved for use under this Specification:

(1) Bolts
ASTM A307
ASTM A325
ASTM A325M
ASTM A354
ASTM A449
ASTM A490
ASTM A490M
ASTM F1852
ASTM F2280

(2) Nuts
ASTM A194/A194M
ASTM A563
ASTM A563M

(3) Washers
ASTM F436
ASTM F436M
ASTM F844

(4) Compressible-Washer-Type Direct Tension Indicators
ASTM F959
ASTM F959M

Manufacturer's certification shall constitute sufficient evidence of conformity with the standards.

4. Anchor Rods and Threaded Rods

Anchor rod and threaded rod material conforming to one of the following ASTM *specifications* is approved for use under this Specification:

ASTM A36/A36M
ASTM A193/A193M
ASTM A354
ASTM A449
ASTM A572/A572M
ASTM A588/A588M
ASTM F1554

User Note: ASTM F1554 is the preferred material specification for anchor rods.

A449 material is acceptable for high-strength anchor rods and threaded rods of any diameter.

Threads on anchor rods and threaded rods shall conform to the Unified Standard Series of ASME B18.2.6 and shall have Class 2A tolerances.

Manufacturer's certification shall constitute sufficient evidence of conformity with the standards.

5. Consumables for Welding

Filler metals and fluxes shall conform to one of the following *specifications* of the American Welding Society:

AWS A5.1/A5.1M
AWS A5.5/A5.5M
AWS A5.17/A5.17M
AWS A5.18/A5.18M
AWS A5.20/A5.20M
AWS A5.23/A5.23M
AWS A5.25/A5.25M
AWS A5.26/A5.26M
AWS A5.28/A5.28M
AWS A5.29/A5.29M
AWS A5.32/A5.32M

Manufacturer's certification shall constitute sufficient evidence of conformity with the standards. Filler metals and fluxes that are suitable for the intended application shall be selected.

6. Headed Stud Anchors

Steel headed stud anchors shall conform to the requirements of the *Structural Welding Code—Steel* (AWS D1.1/D1.1M).

Manufacturer's certification shall constitute sufficient evidence of conformity with AWS D1.1/D1.1M.

A4. STRUCTURAL DESIGN DRAWINGS AND SPECIFICATIONS

The structural *design drawings* and *specifications* shall meet the requirements in the *Code of Standard Practice*.

User Note: Provisions in this Specification contain information that is to be shown on design drawings. These include:

Section A3.1c Rolled heavy shapes where alternate core Charpy V-*notch toughness* (CVN) is required

Section A3.1d Built-up heavy shapes where CVN toughness is required

Section J3.1 Locations of connections using *pretensioned bolts*

Other information is needed by the fabricator or erector and should be shown on design drawings including:

Fatigue details requiring *nondestructive testing* (Appendix 3; e.g., Table A3.1, Cases 5.1 to 5.4)

Risk category (Chapter N)

Indication of complete-joint-penetration (CJP) welds subject to tension (Chapter N)

CHAPTER B
DESIGN REQUIREMENTS

This chapter addresses general requirements for the analysis and design of steel structures applicable to all chapters of the specification.

The chapter is organized as follows:

B1. General Provisions
B2. Loads and Load Combinations
B3. Design Basis
B4. Member Properties
B5. Fabrication and Erection
B6. Quality Control and Quality Assurance
B7. Evaluation of Existing Structures

B1. GENERAL PROVISIONS

The design of members and *connections* shall be consistent with the intended behavior of the framing system and the assumptions made in the *structural analysis*. Unless restricted by the *applicable building code*, *lateral load* resistance and *stability* may be provided by any combination of members and connections.

B2. LOADS AND LOAD COMBINATIONS

The *loads* and load combinations shall be as stipulated by the *applicable building code*. In the absence of a building code, the loads and load combinations shall be those stipulated in *Minimum Design Loads for Buildings and Other Structures* (ASCE/SEI 7). For design purposes, the *nominal loads* shall be taken as the loads stipulated by the applicable building code.

User Note: When using ASCE/SEI 7, for design according to Section B3.3 (LRFD), the load combinations in ASCE/SEI 7, Section 2.3 apply. For design according to Section B3.4 (ASD), the load combinations in ASCE/SEI 7, Section 2.4 apply.

B3. DESIGN BASIS

Designs shall be made according to the provisions for *load and resistance factor design (LRFD)* or to the provisions for *allowable strength design (ASD)*.

1. Required Strength

The *required strength* of structural members and *connections* shall be determined by *structural analysis* for the appropriate *load* combinations as stipulated in Section B2.

Design by *elastic*, *inelastic* or *plastic analysis* is permitted. Provisions for inelastic and plastic analysis are as stipulated in Appendix 1, Design by Inelastic Analysis.

2. Limit States

Design shall be based on the principle that no applicable strength or *serviceability limit state* shall be exceeded when the structure is subjected to all appropriate *load* combinations.

Design for structural integrity requirements of the *applicable building code* shall be based on *nominal strength* rather than *design strength* (LRFD) or *allowable strength* (ASD), unless specifically stated otherwise in the applicable building code. Limit states for connections based on limiting deformations or *yielding* of the connection components need not be considered for meeting structural integrity requirements.

For the purpose of satisfying structural integrity provisions of the applicable building code, *bearing* bolts in connections with short-slotted holes parallel to the direction of the tension load are permitted, and shall be assumed to be located at the end of the slot.

3. Design for Strength Using Load and Resistance Factor Design (LRFD)

Design according to the provisions for *load and resistance factor design* (LRFD) satisfies the requirements of this Specification when the *design strength* of each *structural component* equals or exceeds the *required strength* determined on the basis of the *LRFD load combinations*. All provisions of this Specification, except for those in Section B3.4, shall apply.

Design shall be performed in accordance with Equation B3-1:

$$R_u \le \phi R_n \tag{B3-1}$$

where

R_u = required strength using LRFD load combinations
R_n = *nominal strength*, specified in Chapters B through K
ϕ = *resistance factor*, specified in Chapters B through K
ϕR_n = design strength

4. Design for Strength Using Allowable Strength Design (ASD)

Design according to the provisions for *allowable strength design (ASD)* satisfies the requirements of this Specification when the *allowable strength* of each *structural component* equals or exceeds the *required strength* determined on the basis of the *ASD load combinations*. All provisions of this Specification, except those of Section B3.3, shall apply.

Design shall be performed in accordance with Equation B3-2:

$$R_a \le R_n/\Omega \tag{B3-2}$$

where

R_a = required strength using ASD load combinations
R_n = *nominal strength*, specified in Chapters B through K
Ω = *safety factor*, specified in Chapters B through K
R_n/Ω = allowable strength

5. Design for Stability

Stability of the structure and its elements shall be determined in accordance with Chapter C.

6. Design of Connections

Connection elements shall be designed in accordance with the provisions of Chapters J and K. The *forces* and deformations used in design shall be consistent with the intended performance of the connection and the assumptions used in the *structural analysis*. Self-limiting inelastic deformations of the connections are permitted. At points of support, *beams*, *girders* and trusses shall be restrained against rotation about their longitudinal axis unless it can be shown by analysis that the restraint is not required.

User Note: Section 3.1.2 of the *Code of Standard Practice* addresses communication of necessary information for the design of connections.

6a. Simple Connections

A *simple connection* transmits a negligible moment. In the analysis of the structure, simple connections may be assumed to allow unrestrained relative rotation between the framing elements being connected. A simple connection shall have sufficient *rotation capacity* to accommodate the required rotation determined by the analysis of the structure.

6b. Moment Connections

Two types of moment connections, fully restrained and partially restrained, are permitted, as specified below.

(a) Fully Restrained (FR) Moment Connections

A *fully restrained (FR) moment connection* transfers moment with a negligible rotation between the connected members. In the analysis of the structure, the connection may be assumed to allow no relative rotation. An FR connection shall have sufficient strength and *stiffness* to maintain the angle between the connected members at the *strength limit states*.

(b) Partially Restrained (PR) Moment Connections

Partially restrained (PR) moment connections transfer moments, but the rotation between connected members is not negligible. In the analysis of the structure, the force-deformation response characteristics of the connection shall be included. The response characteristics of a PR connection shall be documented in the technical literature or established by analytical or experimental means. The component elements of a PR connection shall have sufficient strength, stiffness and deformation capacity at the strength limit states.

7. Moment Redistribution in Beams

The *required flexural strength* of *beams* composed of *compact sections*, as defined in Section B4.1, and satisfying the *unbraced length* requirements of Section F13.5

may be taken as nine-tenths of the negative moments at the points of support, produced by the *gravity loading* and determined by an *elastic analysis* satisfying the requirements of Chapter C, provided that the maximum positive moment is increased by one-tenth of the average negative moment determined by an elastic analysis. This reduction is not permitted for moments in members with F_y exceeding 65 ksi (450 MPa), for moments produced by loading on cantilevers, for design using *partially restrained (PR) moment connections*, or for design by *inelastic analysis* using the provisions of Appendix 1. This reduction is permitted for design according to Section B3.3 (LRFD) and for design according to Section B3.4 (ASD). The required axial strength shall not exceed $0.15\phi_c F_y A_g$ for LRFD or $0.15F_y A_g/\Omega_c$ for ASD where ϕ_c and Ω_c are determined from Section E1, and A_g = gross area of member, in.^{2} (mm^2), and F_y = *specified minimum yield stress*, ksi (MPa).

8. Diaphragms and Collectors

Diaphragms and *collectors* shall be designed for forces that result from *loads* as stipulated in Section B2. They shall be designed in conformance with the provisions of Chapters C through K, as applicable.

9. Design for Serviceability

The overall structure and the individual members and connections shall be checked for serviceability. Requirements for serviceability design are given in Chapter L.

10. Design for Ponding

The roof system shall be investigated through *structural analysis* to assure adequate strength and *stability* under *ponding* conditions, unless the roof surface is provided with a slope of $^1/_4$ in. per ft (20 mm per meter) or greater toward points of free drainage or an adequate system of drainage is provided to prevent the accumulation of water.

Methods of checking ponding are provided in Appendix 2, Design for Ponding.

11. Design for Fatigue

Fatigue shall be considered in accordance with Appendix 3, Design for Fatigue, for members and their *connections* subject to repeated *loading*. Fatigue need not be considered for seismic effects or for the effects of wind loading on normal building *lateral force resisting systems* and building enclosure components.

12. Design for Fire Conditions

Two methods of design for *fire* conditions are provided in Appendix 4, Structural Design for Fire Conditions: by Analysis and by Qualification Testing. Compliance with the fire protection requirements in the *applicable building code* shall be deemed to satisfy the requirements of this section and Appendix 4.

Nothing in this section is intended to create or imply a contractual requirement for the *engineer of record* responsible for the structural design or any other member of the design team.

User Note: Design by qualification testing is the prescriptive method specified in most building codes. Traditionally, on most projects where the architect is the prime professional, the architect has been the responsible party to specify and coordinate fire protection requirements. Design by analysis is a new engineering approach to fire protection. Designation of the person(s) responsible for designing for fire conditions is a contractual matter to be addressed on each project.

13. Design for Corrosion Effects

Where corrosion may impair the strength or serviceability of a structure, *structural components* shall be designed to tolerate corrosion or shall be protected against corrosion.

14. Anchorage to Concrete

Anchorage between steel and concrete acting compositely shall be designed in accordance with Chapter I. The design of *column bases* and anchor rods shall be in accordance with Chapter J.

B4. MEMBER PROPERTIES

1. Classification of Sections for Local Buckling

For compression, sections are classified as nonslender element or *slender-element sections*. For a nonslender element section, the width-to-thickness ratios of its compression elements shall not exceed λ_r from Table B4.1a. If the width-to-thickness ratio of any compression element exceeds λ_r, the section is a slender-element section.

For flexure, sections are classified as *compact*, *noncompact* or slender-element sections. For a section to qualify as compact, its flanges must be continuously connected to the web or webs and the width-to-thickness ratios of its compression elements shall not exceed the limiting width-to-thickness ratios, λ_p, from Table B4.1b. If the width-to-thickness ratio of one or more compression elements exceeds λ_p, but does not exceed λ_r from Table B4.1b, the section is noncompact. If the width-to-thickness ratio of any compression element exceeds λ_r, the section is a slender-element section.

1a. Unstiffened Elements

For *unstiffened elements* supported along only one edge parallel to the direction of the compression *force*, the width shall be taken as follows:

(a) For flanges of I-shaped members and tees, the width, b, is one-half the full-flange width, b_f.

(b) For legs of angles and flanges of channels and zees, the width, b, is the full *nominal dimension*.

(c) For plates, the width, b, is the distance from the free edge to the first row of *fasteners* or line of welds.

(d) For stems of tees, d is taken as the full nominal depth of the section.

User Note: Refer to Table B4.1 for the graphic representation of unstiffened element dimensions.

1b. Stiffened Elements

For *stiffened elements* supported along two edges parallel to the direction of the compression *force*, the width shall be taken as follows:

(a) For webs of rolled or *formed sections*, h is the clear distance between flanges less the fillet or corner radius at each flange; h_c is twice the distance from the center of gravity to the inside face of the compression flange less the fillet or corner radius.

(b) For webs of *built-up sections*, h is the distance between adjacent lines of *fasteners* or the clear distance between flanges when welds are used, and h_c is twice the distance from the center of gravity to the nearest line of fasteners at the compression flange or the inside face of the compression flange when welds are used; h_p is twice the distance from the plastic neutral axis to the nearest line of fasteners at the compression flange or the inside face of the compression flange when welds are used.

(c) For flange or *diaphragm plates* in built-up sections, the width, b, is the distance between adjacent lines of fasteners or lines of welds.

(d) For flanges of rectangular hollow structural sections (*HSS*), the width, b, is the clear distance between webs less the inside corner radius on each side. For webs of rectangular HSS, h is the clear distance between the flanges less the inside corner radius on each side. If the corner radius is not known, b and h shall be taken as the corresponding outside dimension minus three times the thickness. The thickness, t, shall be taken as the *design wall thickness*, per Section B4.2.

(e) For perforated *cover plates*, b is the transverse distance between the nearest line of fasteners, and the *net area* of the plate is taken at the widest hole.

User Note: Refer to Table B4.1 for the graphic representation of stiffened element dimensions.

For tapered flanges of rolled sections, the thickness is the nominal value halfway between the free edge and the corresponding face of the web.

2. Design Wall Thickness for HSS

The *design wall thickness*, t, shall be used in calculations involving the wall thickness of hollow structural sections (*HSS*). The design wall thickness, t, shall be taken equal to 0.93 times the nominal wall thickness for electric-resistance-welded (ERW) HSS and equal to the nominal thickness for submerged-arc-welded (SAW) HSS.

TABLE B4.1a
Width-to-Thickness Ratios: Compression Elements
Members Subject to Axial Compression

	Case	Description of Element	Width-to-Thickness Ratio	Limiting Width-to-Thickness Ratio λ_r (nonslender/slender)	Examples
Unstiffened Elements	1	Flanges of rolled I-shaped sections, plates projecting from rolled I-shaped sections; outstanding legs of pairs of angles connected with continuous contact, flanges of channels, and flanges of tees	b/t	$0.56\sqrt{\frac{E}{F_y}}$	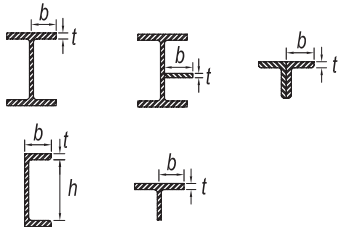
	2	Flanges of built-up I-shaped sections and plates or angle legs projecting from built-up I-shaped sections	b/t	$0.64\sqrt{\frac{k_c E}{F_y}}$ [a]	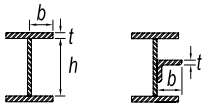
	3	Legs of single angles, legs of double angles with separators, and all other unstiffened elements	b/t	$0.45\sqrt{\frac{E}{F_y}}$	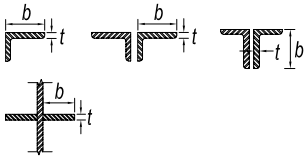
	4	Stems of tees	d/t	$0.75\sqrt{\frac{E}{F_y}}$	
Stiffened Elements	5	Webs of doubly-symmetric I-shaped sections and channels	h/t_w	$1.49\sqrt{\frac{E}{F_y}}$	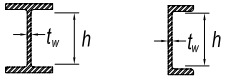
	6	Walls of rectangular HSS and boxes of uniform thickness	b/t	$1.40\sqrt{\frac{E}{F_y}}$	
	7	Flange cover plates and diaphragm plates between lines of fasteners or welds	b/t	$1.40\sqrt{\frac{E}{F_y}}$	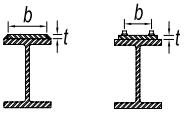
	8	All other stiffened elements	b/t	$1.49\sqrt{\frac{E}{F_y}}$	
	9	Round HSS	D/t	$0.11\frac{E}{F_y}$	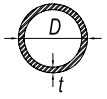

TABLE B4.1b
Width-to-Thickness Ratios: Compression Elements Members Subject to Flexure

	Case	Description of Element	Width-to-Thickness Ratio	Limiting Width-to-Thickness Ratio λ_p (compact/ noncompact)	Limiting Width-to-Thickness Ratio λ_r (noncompact/ slender)	Examples
Unstiffened Elements	10	Flanges of rolled I-shaped sections, channels, and tees	b/t	$0.38\sqrt{\frac{E}{F_y}}$	$1.0\sqrt{\frac{E}{F_y}}$	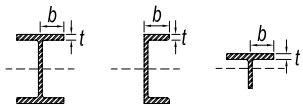
	11	Flanges of doubly and singly symmetric I-shaped built-up sections	b/t	$0.38\sqrt{\frac{E}{F_y}}$	$0.95\sqrt{\frac{k_c E}{F_L}}$ [a] [b]	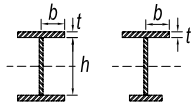
	12	Legs of single angles	b/t	$0.54\sqrt{\frac{E}{F_y}}$	$0.91\sqrt{\frac{E}{F_y}}$	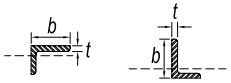
	13	Flanges of all I-shaped sections and channels in flexure about the weak axis	b/t	$0.38\sqrt{\frac{E}{F_y}}$	$1.0\sqrt{\frac{E}{F_y}}$	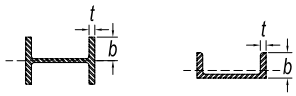
	14	Stems of tees	d/t	$0.84\sqrt{\frac{E}{F_y}}$	$1.03\sqrt{\frac{E}{F_y}}$	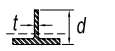
Stiffened Elements	15	Webs of doubly-symmetric I-shaped sections and channels	h/t_w	$3.76\sqrt{\frac{E}{F_y}}$	$5.70\sqrt{\frac{E}{F_y}}$	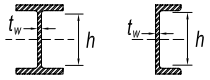
	16	Webs of singly-symmetric I-shaped sections	h_c/t_w	$\frac{\frac{h_c}{h_p}\sqrt{\frac{E}{F_y}}}{\left(0.54\frac{M_p}{M_y}-0.09\right)^2} \le \lambda_r$ [c]	$5.70\sqrt{\frac{E}{F_y}}$	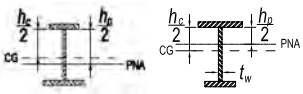
	17	Flanges of rectangular HSS and boxes of uniform thickness	b/t	$1.12\sqrt{\frac{E}{F_y}}$	$1.40\sqrt{\frac{E}{F_y}}$	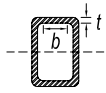
	18	Flange cover plates and diaphragm plates between lines of fasteners or welds	b/t	$1.12\sqrt{\frac{E}{F_y}}$	$1.40\sqrt{\frac{E}{F_y}}$	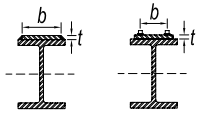
	19	Webs of rectangular HSS and boxes	h/t	$2.42\sqrt{\frac{E}{F_y}}$	$5.70\sqrt{\frac{E}{F_y}}$	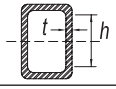
	20	Round HSS	D/t	$0.07\frac{E}{F_y}$	$0.31\frac{E}{F_y}$	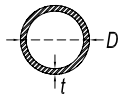

[a] $k_c = 4/\sqrt{h/t_w}$ but shall not be taken less than 0.35 nor greater than 0.76 for calculation purposes.
[b] $F_L = 0.7F_y$ for major axis bending of compact and noncompact web built-up I-shaped members with $S_{xt}/S_{xc} \ge 0.7$;
$F_L = F_y S_{xt}/S_{xc} \ge 0.5F_y$ for major-axis bending of compact and noncompact web built-up I-shaped members with $S_{xt}/S_{xc} < 0.7$.
[c] M_y is the moment at yielding of the extreme fiber. M_p = plastic bending moment, kip-in. (N-mm)
E = modulus of elasticity of steel = 29,000 ksi (200 000 MPa)
F_y = specified minimum yield stress, ksi (MPa)

User Note: A *pipe* can be designed using the provisions of the Specification for round HSS sections as long as the pipe conforms to ASTM A53 Class B and the appropriate limitations of the Specification are used.

ASTM A500 HSS and ASTM A53 Grade B pipe are produced by an ERW process. An SAW process is used for cross sections that are larger than those permitted by ASTM A500.

3. Gross and Net Area Determination

3a. Gross Area

The gross area, A_g, of a member is the total cross-sectional area.

3b. Net Area

The *net area*, A_n, of a member is the sum of the products of the thickness and the net width of each element computed as follows:

In computing net area for tension and shear, the width of a bolt hole shall be taken as $^1/_{16}$ in. (2 mm) greater than the *nominal dimension* of the hole.

For a chain of holes extending across a part in any diagonal or zigzag line, the net width of the part shall be obtained by deducting from the gross width the sum of the diameters or slot dimensions as provided in this section, of all holes in the chain, and adding, for each *gage* space in the chain, the quantity $s^2/4g$,

where

s = longitudinal center-to-center spacing (*pitch*) of any two consecutive holes, in. (mm)

g = transverse center-to-center spacing (gage) between *fastener* gage lines, in. (mm)

For angles, the gage for holes in opposite adjacent legs shall be the sum of the gages from the back of the angles less the thickness.

For slotted *HSS* welded to a *gusset plate*, the net area, A_n, is the gross area minus the product of the thickness and the total width of material that is removed to form the slot.

In determining the net area across plug or *slot welds*, the *weld metal* shall not be considered as adding to the net area.

For members without holes, the net area, A_n, is equal to the gross area, A_g.

User Note: Section J4.1(b) limits A_n to a maximum of $0.85A_g$ for *splice* plates with holes.

B5. FABRICATION AND ERECTION

Shop drawings, fabrication, shop painting and erection shall satisfy the requirements stipulated in Chapter M, Fabrication and Erection.

B6. QUALITY CONTROL AND QUALITY ASSURANCE

Quality control and *quality assurance* activities shall satisfy the requirements stipulated in Chapter N, Quality Control and Quality Assurance.

B7. EVALUATION OF EXISTING STRUCTURES

The evaluation of existing structures shall satisfy the requirements stipulated in Appendix 5, Evaluation of Existing Structures.

CHAPTER C
DESIGN FOR STABILITY

This chapter addresses requirements for the design of structures for *stability*. The *direct analysis method* is presented herein; alternative methods are presented in Appendix 7.

The chapter is organized as follows:

C1. General Stability Requirements
C2. Calculation of Required Strengths
C3. Calculation of Available Strengths

C1. GENERAL STABILITY REQUIREMENTS

Stability shall be provided for the structure as a whole and for each of its elements. The effects of all of the following on the stability of the structure and its elements shall be considered: (1) flexural, shear and axial member deformations, and all other deformations that contribute to displacements of the structure; (2) *second-order effects* (both *P*-Δ and *P*-δ *effects*); (3) geometric imperfections; (4) *stiffness* reductions due to inelasticity; and (5) uncertainty in stiffness and strength. All *load*-dependent effects shall be calculated at a level of loading corresponding to *LRFD load combinations* or 1.6 times *ASD load combinations*.

Any rational method of design for stability that considers all of the listed effects is permitted; this includes the methods identified in Sections C1.1 and C1.2.

For structures designed by *inelastic analysis*, the provisions of Appendix 1 shall be satisfied.

User Note: The term "design" as used in these provisions is the combination of analysis to determine the *required strengths* of components and the proportioning of components to have adequate *available strength*.

See Commentary Section C1 and Table C-C1.1 for explanation of how requirements (1) through (5) of Section C1 are satisfied in the methods of design listed in Sections C1.1 and C1.2.

1. Direct Analysis Method of Design

The *direct analysis method* of design, which consists of the calculation of *required strengths* in accordance with Section C2 and the calculation of *available strengths* in accordance with Section C3, is permitted for all structures.

2. Alternative Methods of Design

The *effective length* method and the *first-order analysis* method, defined in Appendix 7, are permitted as alternatives to the *direct analysis method* for structures that satisfy the constraints specified in that appendix.

C2. CALCULATION OF REQUIRED STRENGTHS

For the *direct analysis method* of design, the *required strengths* of components of the structure shall be determined from an analysis conforming to Section C2.1. The analysis shall include consideration of initial imperfections in accordance with Section C2.2 and adjustments to *stiffness* in accordance with Section C2.3.

1. General Analysis Requirements

The analysis of the structure shall conform to the following requirements:

(1) The analysis shall consider flexural, shear and axial member deformations, and all other component and *connection* deformations that contribute to displacements of the structure. The analysis shall incorporate reductions in all *stiffnesses* that are considered to contribute to the *stability* of the structure, as specified in Section C2.3.

(2) The analysis shall be a *second-order analysis* that considers both P-Δ and P-δ *effects*, except that it is permissible to neglect the effect of P-δ on the response of the structure when the following conditions are satisfied: (a) The structure supports *gravity loads* primarily through nominally-vertical *columns*, walls or frames; (b) the ratio of maximum second-order *drift* to maximum first-order drift (both determined for *LRFD load combinations* or 1.6 times *ASD load combinations*, with stiffnesses adjusted as specified in Section C2.3) in all stories is equal to or less than 1.7; and (c) no more than one-third of the total gravity load on the structure is supported by columns that are part of moment-resisting frames in the direction of translation being considered. It is necessary in all cases to consider P-δ effects in the evaluation of individual members subject to compression and flexure.

User Note: A P-Δ-only second-order analysis (one that neglects the effects of P-δ on the response of the structure) is permitted under the conditions listed. The requirement for considering P-δ effects in the evaluation of individual members can be satisfied by applying the B_1 multiplier defined in Appendix 8.

Use of the approximate method of second-order analysis provided in Appendix 8 is permitted as an alternative to a rigorous second-order analysis.

(3) The analysis shall consider all gravity and other applied *loads* that may influence the stability of the structure.

User Note: It is important to include in the analysis all gravity loads, including loads on *leaning columns* and other elements that are not part of the *lateral force resisting system*.

(4) For design by *LRFD*, the second-order analysis shall be carried out under LRFD load combinations. For design by *ASD*, the second-order analysis shall be carried out under 1.6 times the ASD load combinations, and the results shall be divided by 1.6 to obtain the *required strengths* of components.

2. Consideration of Initial Imperfections

The effect of initial imperfections on the *stability* of the structure shall be taken into account either by direct modeling of imperfections in the analysis as specified in Section C2.2a or by the application of *notional loads* as specified in Section C2.2b.

User Note: The imperfections considered in this section are imperfections in the locations of points of intersection of members. In typical building structures, the important imperfection of this type is the out-of-plumbness of *columns*. Initial out-of-straightness of individual members is not addressed in this section; it is accounted for in the compression member design provisions of Chapter E and need not be considered explicitly in the analysis as long as it is within the limits specified in the AISC *Code of Standard Practice*.

2a. Direct Modeling of Imperfections

In all cases, it is permissible to account for the effect of initial imperfections by including the imperfections directly in the analysis. The structure shall be analyzed with points of intersection of members displaced from their nominal locations. The magnitude of the initial displacements shall be the maximum amount considered in the design; the pattern of initial displacements shall be such that it provides the greatest destabilizing effect.

User Note: Initial displacements similar in configuration to both displacements due to loading and anticipated *buckling* modes should be considered in the modeling of imperfections. The magnitude of the initial displacements should be based on permissible construction tolerances, as specified in the AISC *Code of Standard Practice* or other governing requirements, or on actual imperfections if known.

In the analysis of structures that support *gravity loads* primarily through nominally-vertical *columns*, walls or frames, where the ratio of maximum second-order *drift* to maximum first-order drift (both determined for *LRFD load combinations* or 1.6 times *ASD load combinations*, with *stiffnesses* adjusted as specified in Section C2.3) in all stories is equal to or less than 1.7, it is permissible to include initial imperfections only in the analysis for gravity-only load combinations and not in the analysis for load combinations that include applied *lateral loads*.

2b. Use of Notional Loads to Represent Imperfections

For structures that support *gravity loads* primarily through nominally-vertical *columns*, walls or frames, it is permissible to use *notional loads* to represent the effects of initial imperfections in accordance with the requirements of this section. The notional load shall be applied to a model of the structure based on its nominal geometry.

User Note: The notional load concept is applicable to all types of structures, but the specific requirements in Sections C2.2b(1) through C2.2b(4) are applicable only for the particular class of structure identified above.

(1) Notional loads shall be applied as *lateral loads* at all levels. The notional loads shall be additive to other lateral loads and shall be applied in all load combinations, except as indicated in (4), below. The magnitude of the notional loads shall be:

$$N_i = 0.002\alpha Y_i \tag{C2-1}$$

where

α = 1.0 (LRFD); α = 1.6 (ASD)
N_i = notional load applied at level i, kips (N)
Y_i = gravity load applied at level i from the *LRFD load combination* or *ASD load combination*, as applicable, kips (N)

User Note: The notional loads can lead to additional (generally small) fictitious base shears in the structure. The correct horizontal reactions at the foundation may be obtained by applying an additional horizontal force at the base of the structure, equal and opposite in direction to the sum of all notional loads, distributed among vertical load-carrying elements in the same proportion as the gravity load supported by those elements. The notional loads can also lead to additional overturning effects, which are not fictitious.

(2) The notional load at any level, N_i, shall be distributed over that level in the same manner as the gravity load at the level. The notional loads shall be applied in the direction that provides the greatest destabilizing effect.

User Note: For most building structures, the requirement regarding notional load direction may be satisfied as follows: For load combinations that do not include lateral loading, consider two alternative orthogonal directions of notional load application, in a positive and a negative sense in each of the two directions, in the same direction at all levels; for load combinations that include lateral loading, apply all notional loads in the direction of the resultant of all lateral loads in the combination.

(3) The notional load coefficient of 0.002 in Equation C2-1 is based on a nominal initial story out-of-plumbness ratio of 1/500; where the use of a different maximum out-of-plumbness is justified, it is permissible to adjust the notional load coefficient proportionally.

User Note: An out-of-plumbness of 1/500 represents the maximum tolerance on column plumbness specified in the AISC *Code of Standard Practice* . In some cases, other specified tolerances such as those on plan location of columns will govern and will require a tighter plumbness tolerance.

(4) For structures in which the ratio of maximum second-order *drift* to maximum first-order drift (both determined for LRFD load combinations or 1.6 times ASD load combinations, with stiffnesses adjusted as specified in Section C2.3) in all stories is equal to or less than 1.7, it is permissible to apply the notional load, N_i,

only in gravity-only load combinations and not in combinations that include other lateral loads.

3. Adjustments to Stiffness

The analysis of the structure to determine the *required strengths* of components shall use reduced *stiffnesses,* as follows:

(1) A factor of 0.80 shall be applied to all stiffnesses that are considered to contribute to the *stability* of the structure. It is permissible to apply this reduction factor to all stiffnesses in the structure.

User Note: Applying the stiffness reduction to some members and not others can, in some cases, result in artificial distortion of the structure under *load* and possible unintended redistribution of forces. This can be avoided by applying the reduction to all members, including those that do not contribute to the stability of the structure.

(2) An additional factor, τ_b, shall be applied to the flexural stiffnesses of all members whose flexural stiffnesses are considered to contribute to the stability of the structure.

(a) When $\alpha P_r/P_y \le 0.5$

$$\tau_b = 1.0 \tag{C2-2a}$$

(b) When $\alpha P_r/P_y > 0.5$

$$\tau_b = 4(\alpha P_r/P_y)[1-(\alpha P_r/P_y)] \tag{C2-2b}$$

where

α = 1.0 (LRFD); α = 1.6 (ASD)

P_r = required axial compressive strength using *LRFD* or *ASD load combinations*, kips (N)

P_y = axial *yield strength* (= F_yA_g), kips (N)

User Note: Taken together, sections (1) and (2) require the use of $0.8\tau_b$ times the nominal elastic flexural stiffness and 0.8 times other nominal elastic stiffnesses for *structural steel* members in the analysis.

(3) In structures to which Section C2.2b is applicable, in lieu of using $\tau_b < 1.0$ where $\alpha P_r/P_y > 0.5$, it is permissible to use $\tau_b = 1.0$ for all members if a *notional load* of $0.001\alpha Y_i$ [where Y_i is as defined in Section C2.2b(1)] is applied at all levels, in the direction specified in Section C2.2b(2), in all load combinations. These notional loads shall be added to those, if any, used to account for imperfections and shall not be subject to Section C2.2b(4).

(4) Where components comprised of materials other than structural steel are considered to contribute to the stability of the structure and the governing codes and *specifications* for the other materials require greater reductions in stiffness, such greater stiffness reductions shall be applied to those components.

C3. CALCULATION OF AVAILABLE STRENGTHS

For the *direct analysis method* of design, the *available strengths* of members and connections shall be calculated in accordance with the provisions of Chapters D, E, F, G, H, I, J and K, as applicable, with no further consideration of overall structure *stability*. The *effective length factor*, K, of all members shall be taken as unity unless a smaller value can be justified by rational analysis.

Bracing intended to define the *unbraced lengths* of members shall have sufficient *stiffness* and strength to control member movement at the braced points.

Methods of satisfying bracing requirements for individual columns, beams and beam-columns are provided in Appendix 6. The requirements of Appendix 6 are not applicable to bracing that is included as part of the overall force-resisting system.

CHAPTER D

DESIGN OF MEMBERS FOR TENSION

This chapter applies to members subject to axial tension caused by static *forces* acting through the centroidal axis.

The chapter is organized as follows:

D1. Slenderness Limitations
D2. Tensile Strength
D3. Effective Net Area
D4. Built-Up Members
D5. Pin-Connected Members
D6. Eyebars

User Note: For cases not included in this chapter the following sections apply:

- B3.11 Members subject to *fatigue*
- Chapter H Members subject to combined axial tension and flexure
- J3 Threaded rods
- J4.1 Connecting elements in tension
- J4.3 *Block shear rupture* strength at end connections of tension members

D1. SLENDERNESS LIMITATIONS

There is no maximum slenderness limit for members in tension.

User Note: For members designed on the basis of tension, the slenderness ratio L/r preferably should not exceed 300. This suggestion does not apply to rods or hangers in tension.

D2. TENSILE STRENGTH

The *design tensile strength*, $\phi_t P_n$, and the *allowable tensile strength*, P_n/Ω_t, of tension members shall be the lower value obtained according to the *limit states* of *tensile yielding* in the gross section and *tensile rupture* in the net section.

(a) For tensile yielding in the gross section:

$$P_n = F_y A_g \tag{D2-1}$$

$$\phi_t = 0.90 \text{ (LRFD)} \qquad \Omega_t = 1.67 \text{ (ASD)}$$

(b) For tensile rupture in the net section:

$$P_n = F_u A_e \tag{D2-2}$$

$$\phi_t = 0.75 \text{ (LRFD)} \qquad \Omega_t = 2.00 \text{ (ASD)}$$

where

A_e = *effective net area*, in.^{2} (mm^2)
A_g = gross area of member, in.^{2} (mm^2)
F_y = *specified minimum yield stress*, ksi (MPa)
F_u = *specified minimum tensile strength*, ksi (MPa)

When members without holes are fully connected by welds, the effective net area used in Equation D2-2 shall be as defined in Section D3. When holes are present in a member with welded end *connections*, or at the welded connection in the case of plug or *slot welds*, the effective net area through the holes shall be used in Equation D2-2.

D3. EFFECTIVE NET AREA

The gross area, A_g, and *net area*, A_n, of tension members shall be determined in accordance with the provisions of Section B4.3.

The *effective net area* of tension members shall be determined as follows:

$$A_e = A_n U \tag{D3-1}$$

where U, the *shear lag* factor, is determined as shown in Table D3.1.

For open cross sections such as W, M, S, C or HP shapes, WTs, STs, and single and double angles, the shear lag factor, U, need not be less than the ratio of the gross area of the connected element(s) to the member gross area. This provision does not apply to closed sections, such as *HSS* sections, nor to plates.

User Note: For bolted *splice* plates $A_e = A_n \le 0.85A_g$, according to Section J4.1.

D4. BUILT-UP MEMBERS

For limitations on the longitudinal spacing of connectors between elements in continuous contact consisting of a plate and a shape or two plates, see Section J3.5.

Either perforated *cover plates* or *tie plates* without *lacing* are permitted to be used on the open sides of built-up tension members. Tie plates shall have a length not less than two-thirds the distance between the lines of welds or *fasteners* connecting them to the components of the member. The thickness of such tie plates shall not be less than one-fiftieth of the distance between these lines. The longitudinal spacing of intermittent welds or fasteners at tie plates shall not exceed 6 in. (150 mm).

User Note: The longitudinal spacing of connectors between components should preferably limit the slenderness ratio in any component between the connectors to 300.

TABLE D3.1
Shear Lag Factors for Connections to Tension Members

Case	Description of Element		Shear Lag Factor, U	Example
1	All tension members where the tension load is transmitted directly to each of the cross-sectional elements by fasteners or welds (except as in Cases 4, 5 and 6).		$U = 1.0$	———
2	All tension members, except plates and HSS, where the tension load is transmitted to some but not all of the cross-sectional elements by fasteners or longitudinal welds or by longitudinal welds in combination with transverse welds. (Alternatively, for W, M, S and HP, Case 7 may be used. For angles, Case 8 may be used.)		$U = 1 - \bar{x}/l$	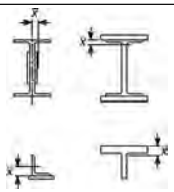
3	All tension members where the tension load is transmitted only by transverse welds to some but not all of the cross-sectional elements.		$U = 1.0$ and A_n = area of the directly connected elements	———
4	Plates where the tension load is transmitted by longitudinal welds only.		$l \geq 2w \ldots U = 1.0$ $2w > l \geq 1.5w \ldots U = 0.87$ $1.5w > l \geq w \ldots U = 0.75$	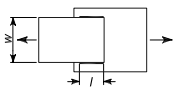
5	Round HSS with a single concentric gusset plate		$l \geq 1.3D \ldots U = 1.0$ $D \leq l < 1.3D \ldots U = 1 - \bar{x}/l$ $\bar{x} = D/\pi$	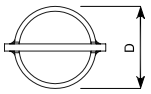
6	Rectangular HSS	with a single concentric gusset plate	$l \geq H \ldots U = 1 - \bar{x}/l$ $\bar{x} = \dfrac{B^2 + 2BH}{4(B+H)}$	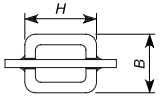
		with two side gusset plates	$l \geq H \ldots U = 1 - \bar{x}/l$ $\bar{x} = \dfrac{B^2}{4(B+H)}$	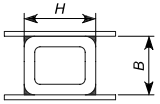
7	W, M, S or HP Shapes or Tees cut from these shapes. (If U is calculated per Case 2, the larger value is permitted to be used.)	with flange connected with 3 or more fasteners per line in the direction of loading	$b_f \geq 2/3d \ldots U = 0.90$ $b_f < 2/3d \ldots U = 0.85$	———
		with web connected with 4 or more fasteners per line in the direction of loading	$U = 0.70$	———
8	Single and double angles (If U is calculated per Case 2, the larger value is permitted to be used.)	with 4 or more fasteners per line in the direction of loading	$U = 0.80$	———
		with 3 fasteners per line in the direction of loading (With fewer than 3 fasteners per line in the direction of loading, use Case 2.)	$U = 0.60$	———

l = length of connection, in. (mm); w = plate width, in. (mm); $\bar{x}$ = eccentricity of connection, in. (mm); B = overall width of rectangular HSS member, measured 90° to the plane of the connection, in. (mm); H = overall height of rectangular HSS member, measured in the plane of the connection, in. (mm)

D5. PIN-CONNECTED MEMBERS

1. Tensile Strength

The *design tensile strength*, $\phi_t P_n$, and the *allowable tensile strength*, P_n/Ω_t, of pin-connected members, shall be the lower value determined according to the *limit states* of *tensile rupture*, *shear rupture*, *bearing* and *yielding*.

(a) For tensile rupture on the net effective area:

$$P_n = F_u\,(2tb_e) \tag{D5-1}$$

$$\phi_t = 0.75 \text{ (LRFD)} \qquad \Omega_t = 2.00 \text{ (ASD)}$$

(b) For shear rupture on the effective area:

$$P_n = 0.6F_uA_{sf} \tag{D5-2}$$

$$\phi_{sf} = 0.75 \text{ (LRFD)} \qquad \Omega_{sf} = 2.00 \text{ (ASD)}$$

where

A_{sf} = area on the shear failure path = $2t(a + d / 2)$, in.^{2} (mm^2)
a = shortest distance from edge of the pin hole to the edge of the member measured parallel to the direction of the *force*, in. (mm)
b_e = $2t + 0.63$, in. ($= 2t + 16$, mm), but not more than the actual distance from the edge of the hole to the edge of the part measured in the direction normal to the applied force, in. (mm)
d = diameter of pin, in. (mm)
t = thickness of plate, in. (mm)

(c) For bearing on the projected area of the pin, use Section J7.

(d) For yielding on the gross section, use Section D2(a).

2. Dimensional Requirements

The pin hole shall be located midway between the edges of the member in the direction normal to the applied *force*. When the pin is expected to provide for relative movement between connected parts while under full *load*, the diameter of the pin hole shall not be more than $^1/_{32}$ in. (1 mm) greater than the diameter of the pin.

The width of the plate at the pin hole shall not be less than $2b_e + d$ and the minimum extension, a, beyond the *bearing* end of the pin hole, parallel to the axis of the member, shall not be less than $1.33b_e$.

The corners beyond the pin hole are permitted to be cut at 45° to the axis of the member, provided the *net area* beyond the pin hole, on a plane perpendicular to the cut, is not less than that required beyond the pin hole parallel to the axis of the member.

D6. EYEBARS

1. Tensile Strength

The *available tensile strength* of *eyebars* shall be determined in accordance with Section D2, with A_g taken as the cross-sectional area of the body.

For calculation purposes, the width of the body of the eyebars shall not exceed eight times its thickness.

2. Dimensional Requirements

Eyebars shall be of uniform thickness, without reinforcement at the pin holes, and have circular heads with the periphery concentric with the pin hole.

The radius of transition between the circular head and the eyebar body shall not be less than the head diameter.

The pin diameter shall not be less than seven-eighths times the eyebar body width, and the pin hole diameter shall not be more than $^1/_{32}$ in. (1 mm) greater than the pin diameter.

For steels having F_y greater than 70 ksi (485 MPa), the hole diameter shall not exceed five times the plate thickness, and the width of the eyebar body shall be reduced accordingly.

A thickness of less than $^1/_2$ in. (13 mm) is permissible only if external nuts are provided to tighten pin plates and *filler* plates into snug contact. The width from the hole edge to the plate edge perpendicular to the direction of applied *load* shall be greater than two-thirds and, for the purpose of calculation, not more than three-fourths times the eyebar body width.

CHAPTER E
DESIGN OF MEMBERS FOR COMPRESSION

This chapter addresses members subject to axial compression through the centroidal axis.

The chapter is organized as follows:

E1. General Provisions
E2. Effective Length
E3. Flexural Buckling of Members without Slender Elements
E4. Torsional and Flexural-Torsional Buckling of Members without Slender Elements
E5. Single Angle Compression Members
E6. Built-Up Members
E7. Members with Slender Elements

User Note: For cases not included in this chapter the following sections apply:

- H1 – H2 Members subject to combined axial compression and flexure
- H3 Members subject to axial compression and torsion
- I2 Composite axially loaded members
- J4.4 Compressive strength of connecting elements

E1. GENERAL PROVISIONS

The *design compressive strength*, $\phi_c P_n$, and the *allowable compressive strength*, P_n/Ω_c, are determined as follows.

The *nominal compressive strength*, P_n, shall be the lowest value obtained based on the applicable *limit states* of *flexural buckling*, *torsional buckling*, and *flexural-torsional buckling.*

$$\phi_c = 0.90 \text{ (LRFD)} \qquad \Omega_c = 1.67 \text{ (ASD)}$$

TABLE USER NOTE E1.1
Selection Table for the Application of Chapter E Sections

Cross Section	Without Slender Elements		With Slender Elements	
	Sections in Chapter E	Limit States	Sections in Chapter E	Limit States
	E3 E4	FB TB	E7	LB FB TB
	E3 E4	FB FTB	E7	LB FB FTB
	E3	FB	E7	LB FB
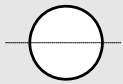	E3	FB	E7	LB FB
	E3 E4	FB FTB	E7	LB FB FTB
	E6 E3 E4	FB FTB	E6 E7	LB FB FTB
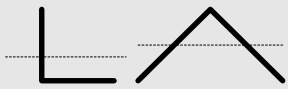	E5		E5	
	E3	FB	N/A	N/A
Unsymmetrical shapes other than single angles	E4	FTB	E7	LB FTB

FB = flexural buckling, TB = torsional buckling, FTB = flexural-torsional buckling, LB = local buckling

E2. EFFECTIVE LENGTH

The *effective length factor*, *K,* for calculation of member slenderness, *KL/r,* shall be determined in accordance with Chapter C or Appendix 7,

where

L = laterally *unbraced length* of the member, in. (mm)

r = radius of gyration, in. (mm)

User Note: For members designed on the basis of compression, the effective slenderness ratio KL/r preferably should not exceed 200.

E3. FLEXURAL BUCKLING OF MEMBERS WITHOUT SLENDER ELEMENTS

This section applies to nonslender element compression members as defined in Section B4.1 for elements in uniform compression.

User Note: When the torsional *unbraced length* is larger than the lateral unbraced length, Section E4 may control the design of wide flange and similarly shaped *columns*.

The *nominal compressive strength*, P_n, shall be determined based on the *limit state* of *flexural buckling*.

$$P_n = F_{cr} A_g \tag{E3-1}$$

The *critical stress*, F_{cr}, is determined as follows:

(a) When $\dfrac{KL}{r} \le 4.71\sqrt{\dfrac{E}{F_y}}$ $\left(\text{or } \dfrac{F_y}{F_e} \le 2.25\right)$

$$F_{cr} = \left[0.658^{\frac{F_y}{F_e}}\right] F_y \tag{E3-2}$$

(b) When $\dfrac{KL}{r} > 4.71\sqrt{\dfrac{E}{F_y}}$ $\left(\text{or } \dfrac{F_y}{F_e} > 2.25\right)$

$$F_{cr} = 0.877 F_e \tag{E3-3}$$

where

F_e = elastic *buckling* stress determined according to Equation E3-4, as specified in Appendix 7, Section 7.2.3(b), or through an elastic buckling analysis, as applicable, ksi (MPa)

$$F_e = \frac{\pi^2 E}{\left(\dfrac{KL}{r}\right)^2} \tag{E3-4}$$

User Note: The two inequalities for calculating the limits and applicability of Sections E3(a) and E3(b), one based on KL/r and one based on F_y/F_e, provide the same result.

E4. TORSIONAL AND FLEXURAL-TORSIONAL BUCKLING OF MEMBERS WITHOUT SLENDER ELEMENTS

This section applies to singly symmetric and unsymmetric members and certain doubly symmetric members, such as cruciform or built-up *columns* without slender elements, as defined in Section B4.1 for elements in uniform compression. In addition, this section applies to all doubly symmetric members without slender elements when the torsional *unbraced length* exceeds the lateral unbraced length. These provisions are required for single angles with $b/t > 20$.

The *nominal compressive strength*, P_n, shall be determined based on the *limit states* of *torsional* and *flexural-torsional buckling*, as follows:

$$P_n = F_{cr}A_g \tag{E4-1}$$

The *critical stress*, F_{cr}, is determined as follows:

(a) For double angle and tee-shaped compression members:

$$F_{cr} = \left(\frac{F_{cry} + F_{crz}}{2H}\right)\left[1 - \sqrt{1 - \frac{4F_{cry}F_{crz}H}{\left(F_{cry} + F_{crz}\right)^2}}\right] \tag{E4-2}$$

where F_{cry} is taken as F_{cr} from Equation E3-2 or E3-3 for *flexural buckling* about the y-axis of symmetry, and $\frac{KL}{r} = \frac{K_yL}{r_y}$ for tee-shaped compression members, and $\frac{KL}{r} = \left(\frac{KL}{r}\right)_m$ from Section E6 for double angle compression members, and

$$F_{crz} = \frac{GJ}{A_g\bar{r}_o^2} \tag{E4-3}$$

(b) For all other cases, F_{cr} shall be determined according to Equation E3-2 or E3-3, using the torsional or flexural-torsional elastic *buckling* stress, F_e, determined as follows:

(i) For doubly symmetric members:

$$F_e = \left[\frac{\pi^2EC_w}{\left(K_zL\right)^2} + GJ\right]\frac{1}{I_x + I_y} \tag{E4-4}$$

(ii) For singly symmetric members where y is the axis of symmetry:

$$F_e = \left(\frac{F_{ey} + F_{ez}}{2H}\right)\left[1 - \sqrt{1 - \frac{4F_{ey}F_{ez}H}{(F_{ey} + F_{ez})^2}}\right] \quad \text{(E4-5)}$$

(iii) For unsymmetric members, F_e is the lowest root of the cubic equation:

$$(F_e - F_{ex})(F_e - F_{ey})(F_e - F_{ez}) - F_e^2(F_e - F_{ey})\left(\frac{x_o}{\bar{r}_o}\right)^2 - F_e^2(F_e - F_{ex})\left(\frac{y_o}{\bar{r}_o}\right)^2 = 0 \quad \text{(E4-6)}$$

where

A_g = gross cross-sectional area of member, in.^{2} (mm^2)
C_w = warping constant, in.^{6} (mm^6)

$$F_{ex} = \frac{\pi^2 E}{\left(\frac{K_x L}{r_x}\right)^2} \quad \text{(E4-7)}$$

$$F_{ey} = \frac{\pi^2 E}{\left(\frac{K_y L}{r_y}\right)^2} \quad \text{(E4-8)}$$

$$F_{ez} = \left(\frac{\pi^2 E C_w}{(K_z L)^2} + GJ\right)\frac{1}{A_g \bar{r}_o^2} \quad \text{(E4-9)}$$

G = shear modulus of elasticity of steel = 11,200 ksi (77 200 MPa)

$$H = 1 - \frac{x_o^2 + y_o^2}{\bar{r}_o^2} \quad \text{(E4-10)}$$

I_x, I_y = moment of inertia about the principal axes, in.^{4} (mm^4)
J = torsional constant, in.^{4} (mm^4)
K_x = *effective length factor* for flexural buckling about x-axis
K_y = effective length factor for flexural buckling about y-axis
K_z = effective length factor for torsional buckling
$\bar{r}_o$ = polar radius of gyration about the shear center, in. (mm)

$$\bar{r}_o^2 = x_o^2 + y_o^2 + \frac{I_x + I_y}{A_g} \quad \text{(E4-11)}$$

r_x = radius of gyration about x-axis, in. (mm)
r_y = radius of gyration about y-axis, in. (mm)
x_o, y_o = coordinates of the shear center with respect to the centroid, in. (mm)

User Note: For doubly symmetric I-shaped sections, C_w may be taken as $I_y h_o^2/4$, where h_o is the distance between flange centroids, in lieu of a more precise analysis. For tees and double angles, omit the term with C_w when computing F_{ez} and take x_o as 0.

E5. SINGLE ANGLE COMPRESSION MEMBERS

The *nominal compressive strength*, P_n, of single angle members shall be determined in accordance with Section E3 or Section E7, as appropriate, for axially loaded members. For single angles with $b/t > 20$, Section E4 shall be used. Members meeting the criteria imposed in Section E5(a) or E5(b) are permitted to be designed as axially loaded members using the specified effective slenderness ratio, KL/r.

The effects of eccentricity on single angle members are permitted to be neglected when evaluated as axially loaded compression members using one of the effective slenderness ratios specified in Section E5(a) or E5(b), provided that:

(1) members are loaded at the ends in compression through the same one leg;
(2) members are attached by welding or by *connections* with a minimum of two bolts; and
(3) there are no intermediate transverse *loads.*

Single angle members with different end conditions from those described in Section E5(a) or (b), with the ratio of long leg width to short leg width greater than 1.7 or with transverse loading, shall be evaluated for combined axial load and flexure using the provisions of Chapter H.

(a) For equal-leg angles or unequal-leg angles connected through the longer leg that are individual members or are web members of planar trusses with adjacent web members attached to the same side of the *gusset plate* or chord:

(i) When $\dfrac{L}{r_x} \le 80$:

$$\frac{KL}{r} = 72 + 0.75\frac{L}{r_x} \tag{E5-1}$$

(ii) When $\dfrac{L}{r_x} > 80$:

$$\frac{KL}{r} = 32 + 1.25\frac{L}{r_x} \le 200 \tag{E5-2}$$

For unequal-leg angles with leg length ratios less than 1.7 and connected through the shorter leg, KL/r from Equations E5-1 and E5-2 shall be increased by adding $4[(b_l/b_s)^2 - 1]$, but KL/r of the members shall not be taken as less than $0.95L/r_z$.

(b) For equal-leg angles or unequal-leg angles connected through the longer leg that are web members of box or space trusses with adjacent web members attached to the same side of the gusset plate or chord:

(i) When $\dfrac{L}{r_x} \le 75$:

$$\frac{KL}{r} = 60 + 0.8\frac{L}{r_x} \tag{E5-3}$$

(ii) When $\dfrac{L}{r_x} > 75$:

$$\frac{KL}{r} = 45 + \frac{L}{r_x} \leq 200 \tag{E5-4}$$

For unequal-leg angles with leg length ratios less than 1.7 and connected through the shorter leg, KL/r from Equations E5-3 and E5-4 shall be increased by adding $6[(b_l/b_s)^2 - 1]$, but KL/r of the member shall not be taken as less than $0.82L/r_z$

where

L = length of member between work points at truss chord centerlines, in. (mm)
b_l = length of longer leg of angle, in. (mm)
b_s = length of shorter leg of angle, in. (mm)
r_x = radius of gyration about the *geometric axis* parallel to the connected leg, in. (mm)
r_z = radius of gyration about the minor principal axis, in. (mm)

E6. BUILT-UP MEMBERS

1. Compressive Strength

This section applies to *built-up members* composed of two shapes either (a) interconnected by bolts or welds, or (b) with at least one open side interconnected by perforated *cover plates* or *lacing* with *tie plates*. The end *connection* shall be welded or connected by means of *pretensioned bolts* with Class A or B *faying surfaces*.

User Note: It is acceptable to design a bolted end connection of a built-up compression member for the full compressive *load* with bolts in *bearing* and bolt design based on the shear strength; however, the bolts must be pretensioned. In built-up compression members, such as double-angle struts in trusses, a small relative *slip* between the elements especially at the end connections can increase the *effective length* of the combined cross section to that of the individual components and significantly reduce the compressive strength of the strut. Therefore, the connection between the elements at the ends of built-up members should be designed to resist slip.

The *nominal compressive strength* of built-up members composed of two shapes that are interconnected by bolts or welds shall be determined in accordance with Sections E3, E4 or E7 subject to the following modification. In lieu of more accurate analysis, if the *buckling* mode involves relative deformations that produce shear *forces* in the connectors between individual shapes, KL/r is replaced by $(KL/r)_m$ determined as follows:

(a) For intermediate connectors that are bolted snug-tight:

$$\left(\frac{KL}{r}\right)_m = \sqrt{\left(\frac{KL}{r}\right)_o^2 + \left(\frac{a}{r_i}\right)^2} \tag{E6-1}$$

(b) For intermediate connectors that are welded or are connected by means of pretensioned bolts:

(i) When $\frac{a}{r_i} \le 40$

$$\left(\frac{KL}{r}\right)_m = \left(\frac{KL}{r}\right)_o \quad \text{(E6-2a)}$$

(ii) When $\frac{a}{r_i} > 40$

$$\left(\frac{KL}{r}\right)_m = \sqrt{\left(\frac{KL}{r}\right)_o^2 + \left(\frac{K_i a}{r_i}\right)^2} \quad \text{(E6-2b)}$$

where

$\left(\frac{KL}{r}\right)_m$ = modified slenderness ratio of built-up member

$\left(\frac{KL}{r}\right)_o$ = slenderness ratio of built-up member acting as a unit in the buckling direction being considered

K_i = 0.50 for angles back-to-back
= 0.75 for channels back-to-back
= 0.86 for all other cases

a = distance between connectors, in. (mm)

r_i = minimum radius of gyration of individual component, in. (mm)

2. Dimensional Requirements

Individual components of compression members composed of two or more shapes shall be connected to one another at intervals, a, such that the effective slenderness ratio, Ka/r_i, of each of the component shapes between the *fasteners* does not exceed three-fourths times the governing slenderness ratio of the *built-up member*. The least radius of gyration, r_i, shall be used in computing the slenderness ratio of each component part.

At the ends of built-up compression members *bearing* on base plates or *finished surfaces*, all components in contact with one another shall be connected by a weld having a length not less than the maximum width of the member or by bolts spaced longitudinally not more than four diameters apart for a distance equal to $1^1/_2$ times the maximum width of the member.

Along the length of built-up compression members between the end connections required above, longitudinal spacing for intermittent welds or bolts shall be adequate to provide for the transfer of the *required strength*. For limitations on the longitudinal spacing of fasteners between elements in continuous contact consisting of a plate and a shape or two plates, see Section J3.5. Where a component of a built-up compression member consists of an outside plate, the maximum spacing shall not exceed the thickness of the thinner outside plate times $0.75\sqrt{E/F_y}$ nor 12 in. (305 mm), when intermittent welds are provided along the edges of the components or when fasteners are provided on all *gage* lines at each section. When fasteners are staggered, the maximum spacing of fasteners on each gage line shall not exceed the thickness of the thinner outside plate times $1.12\sqrt{E/F_y}$ nor 18 in. (460 mm).

Open sides of compression members built up from plates or shapes shall be provided with continuous *cover plates* perforated with a succession of access holes. The unsupported width of such plates at access holes, as defined in Section B4.1, is assumed to contribute to the *available strength* provided the following requirements are met:

(1) The width-to-thickness ratio shall conform to the limitations of Section B4.1.

User Note: It is conservative to use the limiting width-to-thickness ratio for Case 7 in Table B4.1a with the width, b, taken as the transverse distance between the nearest lines of fasteners. The *net area* of the plate is taken at the widest hole. In lieu of this approach, the limiting width-to-thickness ratio may be determined through analysis.

(2) The ratio of length (in direction of *stress*) to width of hole shall not exceed 2.
(3) The clear distance between holes in the direction of stress shall be not less than the transverse distance between nearest lines of connecting fasteners or welds.
(4) The periphery of the holes at all points shall have a minimum radius of $1^1/_2$ in. (38 mm).

As an alternative to perforated cover plates, *lacing* with *tie plates* is permitted at each end and at intermediate points if the lacing is interrupted. Tie plates shall be as near the ends as practicable. In members providing available strength, the end tie plates shall have a length of not less than the distance between the lines of fasteners or welds connecting them to the components of the member. Intermediate tie plates shall have a length not less than one-half of this distance. The thickness of tie plates shall be not less than one-fiftieth of the distance between lines of welds or fasteners connecting them to the segments of the members. In welded construction, the welding on each line connecting a tie plate shall total not less than one-third the length of the plate. In bolted construction, the spacing in the direction of stress in tie plates shall be not more than six diameters and the tie plates shall be connected to each segment by at least three fasteners.

Lacing, including flat bars, angles, channels or other shapes employed as lacing, shall be so spaced that the L/r ratio of the flange element included between their connections shall not exceed three-fourths times the governing slenderness ratio for the member as a whole. Lacing shall be proportioned to provide a shearing strength normal to the axis of the member equal to 2% of the *available compressive strength* of the member. The L/r ratio for lacing bars arranged in single systems shall not exceed 140. For double lacing this ratio shall not exceed 200. Double lacing bars shall be joined at the intersections. For lacing bars in compression, L is permitted to be taken as the unsupported length of the lacing bar between welds or fasteners connecting it to the components of the built-up member for single lacing, and 70% of that distance for double lacing.

User Note: The inclination of lacing bars to the axis of the member shall preferably be not less than 60° for single lacing and 45° for double lacing. When the distance between the lines of welds or fasteners in the flanges is more than 15 in. (380 mm), the lacing shall preferably be double or be made of angles.

For additional spacing requirements, see Section J3.5.

E7. MEMBERS WITH SLENDER ELEMENTS

This section applies to slender-element compression members, as defined in Section B4.1 for elements in uniform compression.

The *nominal compressive strength*, P_n, shall be the lowest value based on the applicable *limit states* of *flexural buckling*, *torsional buckling*, and *flexural-torsional buckling*.

$$P_n = F_{cr} A_g \tag{E7-1}$$

The critical *stress*, F_{cr}, shall be determined as follows:

(a) When $\dfrac{KL}{r} \le 4.71\sqrt{\dfrac{E}{QF_y}}$ $\left(\text{or } \dfrac{QF_y}{F_e} \le 2.25 \right)$

$$F_{cr} = Q\left[0.658^{\frac{QF_y}{F_e}}\right]F_y \tag{E7-2}$$

(b) When $\dfrac{KL}{r} > 4.71\sqrt{\dfrac{E}{QF_y}}$ $\left(\text{or } \dfrac{QF_y}{F_e} > 2.25 \right)$

$$F_{cr} = 0.877 F_e \tag{E7-3}$$

where

F_e = elastic *buckling stress*, calculated using Equations E3-4 and E4-4 for doubly symmetric members, Equations E3-4 and E4-5 for singly symmetric members, and Equation E4-6 for unsymmetric members, except for single angles with $b/t \le 20$, where F_e is calculated using Equation E3-4, ksi (MPa)

Q = net reduction factor accounting for all slender compression elements;

= 1.0 for members without slender elements, as defined in Section B4.1, for elements in uniform compression

= $Q_s Q_a$ for members with *slender-element sections*, as defined in Section B4.1, for elements in uniform compression.

User Note: For cross sections composed of only unstiffened slender elements, $Q = Q_s$ ($Q_a = 1.0$). For cross sections composed of only stiffened slender elements, $Q = Q_a$ ($Q_s = 1.0$). For cross sections composed of both stiffened and unstiffened slender elements, $Q = Q_s Q_a$. For cross sections composed of multiple unstiffened slender elements, it is conservative to use the smaller Q_s from the more slender element in determining the member strength for pure compression.

1. Slender Unstiffened Elements, Q_s

The reduction factor, Q_s, for slender *unstiffened elements* is defined as follows:

(a) For flanges, angles and plates projecting from rolled *columns* or other compression members:

(i) When $\frac{b}{t} \le 0.56\sqrt{\frac{E}{F_y}}$

$$Q_s = 1.0 \tag{E7-4}$$

(ii) When $0.56\sqrt{\frac{E}{F_y}} < \frac{b}{t} < 1.03\sqrt{\frac{E}{F_y}}$

$$Q_s = 1.415 - 0.74\left(\frac{b}{t}\right)\sqrt{\frac{F_y}{E}} \tag{E7-5}$$

(iii) When $\frac{b}{t} \ge 1.03\sqrt{\frac{E}{F_y}}$

$$Q_s = \frac{0.69E}{F_y\left(\frac{b}{t}\right)^2} \tag{E7-6}$$

(b) For flanges, angles and plates projecting from built-up I-shaped columns or other compression members:

(i) When $\frac{b}{t} \le 0.64\sqrt{\frac{Ek_c}{F_y}}$

$$Q_s = 1.0 \tag{E7-7}$$

(ii) When $0.64\sqrt{\frac{Ek_c}{F_y}} < \frac{b}{t} \le 1.17\sqrt{\frac{Ek_c}{F_y}}$

$$Q_s = 1.415 - 0.65\left(\frac{b}{t}\right)\sqrt{\frac{F_y}{Ek_c}} \tag{E7-8}$$

(iii) When $\frac{b}{t} > 1.17\sqrt{\frac{Ek_c}{F_y}}$

$$Q_s = \frac{0.90Ek_c}{F_y\left(\frac{b}{t}\right)^2} \tag{E7-9}$$

where

b = width of unstiffened compression element, as defined in Section B4.1, in. (mm)

$k_c = \frac{4}{\sqrt{h/t_w}}$, and shall not be taken less than 0.35 nor greater than 0.76 for calculation purposes

t = thickness of element, in. (mm)

(c) For single angles

(i) When $\frac{b}{t} \le 0.45\sqrt{\frac{E}{F_y}}$

$$Q_s = 1.0 \tag{E7-10}$$

(ii) When $0.45\sqrt{\frac{E}{F_y}} < \frac{b}{t} \le 0.91\sqrt{\frac{E}{F_y}}$

$$Q_s = 1.34 - 0.76\left(\frac{b}{t}\right)\sqrt{\frac{F_y}{E}} \tag{E7-11}$$

(iii) When $\frac{b}{t} > 0.91\sqrt{\frac{E}{F_y}}$

$$Q_s = \frac{0.53E}{F_y\left(\frac{b}{t}\right)^2} \tag{E7-12}$$

where

b = full width of longest leg, in. (mm)

(d) For stems of tees

(i) When $\frac{d}{t} \le 0.75\sqrt{\frac{E}{F_y}}$

$$Q_s = 1.0 \tag{E7-13}$$

(ii) When $0.75\sqrt{\frac{E}{F_y}} < \frac{d}{t} \le 1.03\sqrt{\frac{E}{F_y}}$

$$Q_s = 1.908 - 1.22\left(\frac{d}{t}\right)\sqrt{\frac{F_y}{E}} \tag{E7-14}$$

(iii) When $\frac{d}{t} > 1.03\sqrt{\frac{E}{F_y}}$

$$Q_s = \frac{0.69E}{F_y\left(\frac{d}{t}\right)^2} \tag{E7-15}$$

where

d = full nominal depth of tee, in. (mm)

2. Slender Stiffened Elements, Q_a

The reduction factor, Q_a , for slender *stiffened elements* is defined as follows:

$$Q_a = \frac{A_e}{A_g} \tag{E7-16}$$

where

A_g = gross cross-sectional area of member, in.^{2} (mm^2)

A_e = summation of the effective areas of the cross section based on the reduced *effective width*, b_e, in.^{2} (mm^2)

The reduced effective width, b_e, is determined as follows:

(a) For uniformly compressed slender elements, with $\frac{b}{t} \geq 1.49\sqrt{\frac{E}{f}}$, except flanges of square and rectangular sections of uniform thickness:

$$b_e = 1.92t\sqrt{\frac{E}{f}}\left[1 - \frac{0.34}{(b/t)}\sqrt{\frac{E}{f}}\right] \leq b \tag{E7-17}$$

where

f is taken as F_{cr} with F_{cr} calculated based on $Q = 1.0$

(b) For flanges of square and rectangular *slender-element sections* of uniform thickness with $\frac{b}{t} \geq 1.40\sqrt{\frac{E}{f}}$:

$$b_e = 1.92t\sqrt{\frac{E}{f}}\left[1 - \frac{0.38}{(b/t)}\sqrt{\frac{E}{f}}\right] \leq b \tag{E7-18}$$

where

$f = P_n/A_e$

User Note: In lieu of calculating $f = P_n/A_e$, which requires iteration, f may be taken equal to F_y. This will result in a slightly conservative estimate of *column available strength*.

(c) For axially loaded circular sections:

When $0.11\frac{E}{F_y} < \frac{D}{t} < 0.45\frac{E}{F_y}$

$$Q = Q_a = \frac{0.038E}{F_y(D/t)} + \frac{2}{3} \tag{E7-19}$$

where

D = outside diameter of round *HSS*, in. (mm)

t = thickness of wall, in. (mm)

CHAPTER F

DESIGN OF MEMBERS FOR FLEXURE

This chapter applies to members subject to simple bending about one principal axis. For simple bending, the member is loaded in a plane parallel to a principal axis that passes through the shear center or is restrained against twisting at *load* points and supports.

The chapter is organized as follows:

F1. General Provisions
F2. Doubly Symmetric Compact I-Shaped Members and Channels Bent About Their Major Axis
F3. Doubly Symmetric I-Shaped Members with Compact Webs and Noncompact or Slender Flanges Bent About Their Major Axis
F4. Other I-Shaped Members With Compact or Noncompact Webs Bent About Their Major Axis
F5. Doubly Symmetric and Singly Symmetric I-Shaped Members With Slender Webs Bent About Their Major Axis
F6. I-Shaped Members and Channels Bent About Their Minor Axis
F7. Square and Rectangular HSS and Box-Shaped Members
F8. Round HSS
F9. Tees and Double Angles Loaded in the Plane of Symmetry
F10. Single Angles
F11. Rectangular Bars and Rounds
F12. Unsymmetrical Shapes
F13. Proportions of Beams and Girders

User Note: For cases not included in this chapter the following sections apply:

- Chapter G — Design provisions for shear
- H1–H3 — Members subject to biaxial flexure or to combined flexure and axial force
- H3 — Members subject to flexure and torsion
- Appendix 3 — Members subject to *fatigue*

For guidance in determining the appropriate sections of this chapter to apply, Table User Note F1.1 may be used.

TABLE USER NOTE F1.1
Selection Table for the Application of Chapter F Sections

Section in Chapter F	Cross Section	Flange Slenderness	Web Slenderness	Limit States
F2	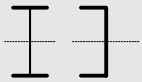	C	C	Y, LTB
F3		NC, S	C	LTB, FLB
F4	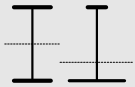	C, NC, S	C, NC	Y, LTB, FLB, TFY
F5	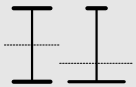	C, NC, S	S	Y, LTB, FLB, TFY
F6	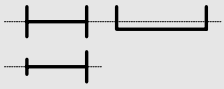	C, NC, S	N/A	Y, FLB
F7		C, NC, S	C, NC	Y, FLB, WLB
F8	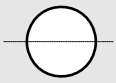	N/A	N/A	Y, LB
F9	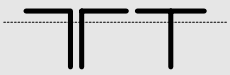	C, NC, S	N/A	Y, LTB, FLB
F10	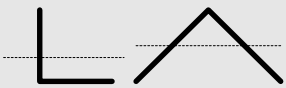	N/A	N/A	Y, LTB, LLB
F11		N/A	N/A	Y, LTB
F12	Unsymmetrical shapes, other than single angles	N/A	N/A	All limit states

Y = yielding, LTB = lateral-torsional buckling, FLB = flange local buckling, WLB = web local buckling, TFY = tension flange yielding, LLB = leg local buckling, LB = local buckling, C = compact, NC = noncompact, S = slender

F1. GENERAL PROVISIONS

The *design flexural strength*, $\phi_b M_n$, and the *allowable flexural strength*, M_n/Ω_b, shall be determined as follows:

(1) For all provisions in this chapter

$$\phi_b = 0.90 \text{ (LRFD)} \qquad \Omega_b = 1.67 \text{ (ASD)}$$

and the *nominal flexural strength*, M_n, shall be determined according to Sections F2 through F13.

(2) The provisions in this chapter are based on the assumption that points of support for *beams* and girders are restrained against rotation about their longitudinal axis.

(3) For singly symmetric members in *single curvature* and all doubly symmetric members:

C_b, the *lateral-torsional buckling* modification factor for nonuniform moment diagrams when both ends of the segment are braced is determined as follows:

$$C_b = \frac{12.5M_{max}}{2.5M_{max} + 3M_A + 4M_B + 3M_C} \tag{F1-1}$$

where

M_{max} = absolute value of maximum moment in the unbraced segment, kip-in. (N-mm)

M_A = absolute value of moment at quarter point of the unbraced segment, kip-in. (N-mm)

M_B = absolute value of moment at centerline of the unbraced segment, kip-in. (N-mm)

M_C = absolute value of moment at three-quarter point of the unbraced segment, kip-in. (N-mm)

For cantilevers or overhangs where the free end is unbraced, $C_b = 1.0$.

User Note: For doubly symmetric members with no transverse loading between brace points, Equation F1-1 reduces to 1.0 for the case of equal end moments of opposite sign (uniform moment), 2.27 for the case of equal end moments of the same sign (*reverse curvature* bending), and to 1.67 when one end moment equals zero. For singly symmetric members, a more detailed analysis for C_b is presented in the Commentary.

(4) In singly symmetric members subject to reverse curvature bending, the *lateral-torsional buckling strength* shall be checked for both flanges. The available flexural strength shall be greater than or equal to the maximum required moment causing compression within the flange under consideration.

F2. DOUBLY SYMMETRIC COMPACT I-SHAPED MEMBERS AND CHANNELS BENT ABOUT THEIR MAJOR AXIS

This section applies to doubly symmetric I-shaped members and channels bent about their major axis, having compact webs and compact flanges as defined in Section B4.1 for flexure.

User Note: All current ASTM A6 W, S, M, C and MC shapes except W21×48, W14×99, W14×90, W12×65, W10×12, W8×31, W8×10, W6×15, W6×9, W6×8.5 and M4×6 have compact flanges for F_y = 50 ksi (345 MPa); all current ASTM A6 W, S, M, HP, C and MC shapes have compact webs at $F_y \le 65$ ksi (450 MPa).

The *nominal flexural strength*, M_n, shall be the lower value obtained according to the *limit states* of *yielding (plastic moment)* and *lateral-torsional buckling*.

1. Yielding

$$M_n = M_p = F_y Z_x \tag{F2-1}$$

where

F_y = *specified minimum yield stress* of the type of steel being used, ksi (MPa)
Z_x = plastic section modulus about the x-axis, in.^{3} (mm^3)

2. Lateral-Torsional Buckling

(a) When $L_b \le L_p$, the *limit state* of *lateral-torsional buckling* does not apply.
(b) When $L_p < L_b \le L_r$

$$M_n = C_b \left[M_p - \left(M_p - 0.7 F_y S_x \right) \left(\frac{L_b - L_p}{L_r - L_p} \right) \right] \le M_p \tag{F2-2}$$

(c) When $L_b > L_r$

$$M_n = F_{cr} S_x \le M_p \tag{F2-3}$$

where

L_b = length between points that are either braced against lateral displacement of the compression flange or braced against twist of the cross section, in. (mm)

$$F_{cr} = \frac{C_b \pi^2 E}{\left(\frac{L_b}{r_{ts}} \right)^2} \sqrt{1 + 0.078 \frac{Jc}{S_x h_o} \left(\frac{L_b}{r_{ts}} \right)^2} \tag{F2-4}$$

and where

E = modulus of elasticity of steel = 29,000 ksi (200 000 MPa)
J = torsional constant, in.^{4} (mm^4)
S_x = elastic section modulus taken about the x-axis, in.^{3} (mm^3)
h_o = distance between the flange centroids, in. (mm)

User Note: The square root term in Equation F2-4 may be conservatively taken equal to 1.0.

User Note: Equations F2-3 and F2-4 provide identical solutions to the following expression for lateral-torsional buckling of doubly symmetric sections that has been presented in past editions of the AISC LRFD Specification:

$$M_{cr} = C_b \frac{\pi}{L_b} \sqrt{EI_y GJ + \left(\frac{\pi E}{L_b}\right)^2 I_y C_w}$$

The advantage of Equations F2-3 and F2-4 is that the form is very similar to the expression for lateral-torsional buckling of singly symmetric sections given in Equations F4-4 and F4-5.

The limiting lengths L_p and L_r are determined as follows:

$$L_p = 1.76 r_y \sqrt{\frac{E}{F_y}} \tag{F2-5}$$

$$L_r = 1.95 r_{ts} \frac{E}{0.7F_y} \sqrt{\frac{Jc}{S_x h_o} + \sqrt{\left(\frac{Jc}{S_x h_o}\right)^2 + 6.76\left(\frac{0.7F_y}{E}\right)^2}} \tag{F2-6}$$

where

$$r_{ts}^2 = \frac{\sqrt{I_y C_w}}{S_x} \tag{F2-7}$$

and the coefficient c is determined as follows:

(a) For doubly symmetric I-shapes: $c = 1$ (F2-8a)

(b) For channels: $c = \frac{h_o}{2}\sqrt{\frac{I_y}{C_w}}$ (F2-8b)

User Note: For doubly symmetric I-shapes with rectangular flanges, $C_w = \frac{I_y h_o^2}{4}$ and thus Equation F2-7 becomes

$$r_{ts}^2 = \frac{I_y h_o}{2S_x}$$

r_{ts} may be approximated accurately and conservatively as the radius of gyration of the compression flange plus one-sixth of the web:

$$r_{ts} = \frac{b_f}{\sqrt{12\left(1 + \frac{1}{6}\frac{ht_w}{b_f t_f}\right)}}$$

F3. DOUBLY SYMMETRIC I-SHAPED MEMBERS WITH COMPACT WEBS AND NONCOMPACT OR SLENDER FLANGES BENT ABOUT THEIR MAJOR AXIS

This section applies to doubly symmetric I-shaped members bent about their major axis having compact webs and noncompact or slender flanges as defined in Section B4.1 for flexure.

User Note: The following shapes have noncompact flanges for F_y = 50 ksi (345 MPa): W21×48, W14×99, W14×90, W12×65, W10×12, W8×31, W8×10, W6×15, W6×9, W6×8.5 and M4×6. All other ASTM A6 W, S and M shapes have compact flanges for $F_y \le 50$ ksi (345 MPa).

The nominal flexural strength, M_n, shall be the lower value obtained according to the *limit states* of *lateral-torsional buckling* and compression flange *local buckling*.

1. Lateral-Torsional Buckling

For *lateral-torsional buckling*, the provisions of Section F2.2 shall apply.

2. Compression Flange Local Buckling

(a) For sections with noncompact flanges

$$M_n = M_p - \left(M_p - 0.7F_yS_x\right)\left(\frac{\lambda - \lambda_{pf}}{\lambda_{rf} - \lambda_{pf}}\right) \tag{F3-1}$$

(b) For sections with slender flanges

$$M_n = \frac{0.9Ek_cS_x}{\lambda^2} \tag{F3-2}$$

where

$\lambda = \dfrac{b_f}{2t_f}$

$\lambda_{pf} = \lambda_p$ is the limiting slenderness for a compact flange, Table B4.1b

$\lambda_{rf} = \lambda_r$ is the limiting slenderness for a noncompact flange, Table B4.1b

$k_c = \dfrac{4}{\sqrt{h/t_w}}$ and shall not be taken less than 0.35 nor greater than 0.76 for calculation purposes

h = distance as defined in Section B4.1b, in. (mm)

F4. OTHER I-SHAPED MEMBERS WITH COMPACT OR NONCOMPACT WEBS BENT ABOUT THEIR MAJOR AXIS

This section applies to doubly symmetric I-shaped members bent about their major axis with noncompact webs and singly symmetric I-shaped members with webs attached to the mid-width of the flanges, bent about their major axis, with compact or noncompact webs, as defined in Section B4.1 for flexure.

User Note: I-shaped members for which this section is applicable may be designed conservatively using Section F5.

The nominal flexural strength, M_n, shall be the lowest value obtained according to the *limit states* of compression flange *yielding*, *lateral-torsional buckling*, compression flange *local buckling,* and tension flange yielding.

1. Compression Flange Yielding

$$M_n = R_{pc}M_{yc} = R_{pc}F_yS_{xc} \tag{F4-1}$$

where

M_{yc} = *yield moment* in the compression flange, kip-in. (N-mm)

2. Lateral-Torsional Buckling

(a) When $L_b \le L_p$, the *limit state* of *lateral-torsional buckling* does not apply.

(b) When $L_p < L_b \le L_r$

$$M_n = C_b\left[R_{pc}M_{yc} - \left(R_{pc}M_{yc} - F_LS_{xc}\right)\left(\frac{L_b - L_p}{L_r - L_p}\right)\right] \le R_{pc}M_{yc} \tag{F4-2}$$

(c) When $L_b > L_r$

$$M_n = F_{cr}S_{xc} \le R_{pc}M_{yc} \tag{F4-3}$$

where

$$M_{yc} = F_yS_{xc} \tag{F4-4}$$

$$F_{cr} = \frac{C_b\pi^2E}{\left(\frac{L_b}{r_t}\right)^2}\sqrt{1 + 0.078\frac{J}{S_{xc}h_o}\left(\frac{L_b}{r_t}\right)^2} \tag{F4-5}$$

For $\frac{I_{yc}}{I_y} \le 0.23$, J shall be taken as zero

where

I_{yc} = moment of inertia of the compression flange about the y-axis, in.^{4} (mm^4)

The *stress*, F_L, is determined as follows:

(i) When $\frac{S_{xt}}{S_{xc}} \ge 0.7$

$$F_L = 0.7F_y \tag{F4-6a}$$

(ii) When $\frac{S_{xt}}{S_{xc}} < 0.7$

$$F_L = F_y\frac{S_{xt}}{S_{xc}} \ge 0.5F_y \tag{F4-6b}$$

The limiting laterally *unbraced length* for the limit state of *yielding*, L_p, is determined as:

$$L_p = 1.1 r_t \sqrt{\frac{E}{F_y}} \tag{F4-7}$$

The limiting unbraced length for the limit state of inelastic lateral-torsional buckling, L_r, is determined as:

$$L_r = 1.95 r_t \frac{E}{F_L} \sqrt{\frac{J}{S_{xc} h_o} + \sqrt{\left(\frac{J}{S_{xc} h_o}\right)^2 + 6.76\left(\frac{F_L}{E}\right)^2}} \tag{F4-8}$$

The web *plastification* factor, R_{pc}, shall be determined as follows:

(i) When $I_{yc}/I_y > 0.23$

(a) When $\frac{h_c}{t_w} \le \lambda_{pw}$

$$R_{pc} = \frac{M_p}{M_{yc}} \tag{F4-9a}$$

(b) When $\frac{h_c}{t_w} > \lambda_{pw}$

$$R_{pc} = \left[\frac{M_p}{M_{yc}} - \left(\frac{M_p}{M_{yc}} - 1\right)\left(\frac{\lambda - \lambda_{pw}}{\lambda_{rw} - \lambda_{pw}}\right)\right] \le \frac{M_p}{M_{yc}} \tag{F4-9b}$$

(ii) When $I_{yc}/I_y \le 0.23$

$$R_{pc} = 1.0 \tag{F4-10}$$

where

M_p $= F_y Z_x \le 1.6 F_y S_{xc}$

S_{xc}, S_{xt} = elastic section modulus referred to compression and tension flanges, respectively, in.^{3} (mm^3)

λ $= \frac{h_c}{t_w}$

λ_{pw} $= \lambda_p$, the limiting slenderness for a compact web, Table B4.1b

λ_{rw} $= \lambda_r$, the limiting slenderness for a noncompact web, Table B4.1b

h_c = twice the distance from the centroid to the following: the inside face of the compression flange less the fillet or corner radius, for rolled shapes; the nearest line of *fasteners* at the compression flange or the inside faces of the compression flange when welds are used, for *built-up sections*, in. (mm)

The effective radius of gyration for lateral-torsional buckling, r_t, is determined as follows:

(i) For I-shapes with a rectangular compression flange

$$r_t = \frac{b_{fc}}{\sqrt{12\left(\frac{h_o}{d} + \frac{1}{6}a_w\frac{h^2}{h_o d}\right)}} \tag{F4-11}$$

where

$$a_w = \frac{h_c t_w}{b_{fc} t_{fc}} \tag{F4-12}$$

b_{fc} = width of compression flange, in. (mm)
t_{fc} = compression flange thickness, in. (mm)

(ii) For I-shapes with a channel cap or a *cover plate* attached to the compression flange

r_t = radius of gyration of the flange components in flexural compression plus one-third of the web area in compression due to application of major axis bending moment alone, in. (mm)
a_w = the ratio of two times the web area in compression due to application of major axis bending moment alone to the area of the compression flange components

User Note: For I-shapes with a rectangular compression flange, r_t may be approximated accurately and conservatively as the radius of gyration of the compression flange plus one-third of the compression portion of the web; in other words

$$r_t = \frac{b_{fc}}{\sqrt{12\left(1 + \frac{1}{6}a_w\right)}}$$

3. Compression Flange Local Buckling

(a) For sections with compact flanges, the *limit state* of *local buckling* does not apply.
(b) For sections with noncompact flanges

$$M_n = R_{pc}M_{yc} - \left(R_{pc}M_{yc} - F_L S_{xc}\right)\left(\frac{\lambda - \lambda_{pf}}{\lambda_{rf} - \lambda_{pf}}\right) \tag{F4-13}$$

(c) For sections with slender flanges

$$M_n = \frac{0.9Ek_c S_{xc}}{\lambda^2} \tag{F4-14}$$

where

F_L is defined in Equations F4-6a and F4-6b

R_{pc} is the web *plastification* factor, determined by Equations F4-9

$k_c = \dfrac{4}{\sqrt{h/t_w}}$ and shall not be taken less than 0.35 nor greater than 0.76 for calculation purposes

$\lambda = \dfrac{b_{fc}}{2t_{fc}}$

$\lambda_{pf} = \lambda_p$, the limiting slenderness for a compact flange, Table B4.1b

$\lambda_{rf} = \lambda_r$, the limiting slenderness for a noncompact flange, Table B4.1b

4. Tension Flange Yielding

(a) When $S_{xt} \geq S_{xc}$, the *limit state* of tension flange *yielding* does not apply.

(b) When $S_{xt} < S_{xc}$

$$M_n = R_{pt} M_{yt} \tag{F4-15}$$

where

$M_{yt} = F_y S_{xt}$

The web *plastification* factor corresponding to the tension flange yielding limit state, R_{pt}, is determined as follows:

(i) When $\dfrac{h_c}{t_w} \leq \lambda_{pw}$

$$R_{pt} = \frac{M_p}{M_{yt}} \tag{F4-16a}$$

(ii) When $\dfrac{h_c}{t_w} > \lambda_{pw}$

$$R_{pt} = \left[\frac{M_p}{M_{yt}} - \left(\frac{M_p}{M_{yt}} - 1\right)\left(\frac{\lambda - \lambda_{pw}}{\lambda_{rw} - \lambda_{pw}}\right)\right] \leq \frac{M_p}{M_{yt}} \tag{F4-16b}$$

where

$\lambda = \dfrac{h_c}{t_w}$

$\lambda_{pw} = \lambda_p$, the limiting slenderness for a compact web, defined in Table B4.1b

$\lambda_{rw} = \lambda_r$, the limiting slenderness for a noncompact web, defined in Table B4.1b

F5. DOUBLY SYMMETRIC AND SINGLY SYMMETRIC I-SHAPED MEMBERS WITH SLENDER WEBS BENT ABOUT THEIR MAJOR AXIS

This section applies to doubly symmetric and singly symmetric I-shaped members with slender webs attached to the mid-width of the flanges and bent about their major axis as defined in Section B4.1 for flexure.

The nominal flexural strength, M_n, shall be the lowest value obtained according to the *limit states* of compression flange *yielding*, *lateral-torsional buckling*, compression flange *local buckling*, and tension flange yielding.

1. Compression Flange Yielding

$$M_n = R_{pg} F_y S_{xc} \tag{F5-1}$$

2. Lateral-Torsional Buckling

$$M_n = R_{pg} F_{cr} S_{xc} \tag{F5-2}$$

(a) When $L_b \le L_p$, the *limit state* of *lateral-torsional buckling* does not apply.
(b) When $L_p < L_b \le L_r$

$$F_{cr} = C_b \left[F_y - (0.3F_y)\left(\frac{L_b - L_p}{L_r - L_p} \right) \right] \le F_y \tag{F5-3}$$

(c) When $L_b > L_r$

$$F_{cr} = \frac{C_b \pi^2 E}{\left(\frac{L_b}{r_t} \right)^2} \le F_y \tag{F5-4}$$

where

L_p is defined by Equation F4-7

$$L_r = \pi r_t \sqrt{\frac{E}{0.7F_y}} \tag{F5-5}$$

R_{pg}, the bending strength reduction factor is determined as follows:

$$R_{pg} = 1 - \frac{a_w}{1{,}200 + 300a_w} \left(\frac{h_c}{t_w} - 5.7\sqrt{\frac{E}{F_y}} \right) \le 1.0 \tag{F5-6}$$

where

a_w is defined by Equation F4-12 but shall not exceed 10

r_t is the effective radius of gyration for lateral buckling as defined in Section F4

3. Compression Flange Local Buckling

$$M_n = R_{pg} F_{cr} S_{xc} \tag{F5-7}$$

(a) For sections with compact flanges, the *limit state* of compression flange *local buckling* does not apply.

(b) For sections with noncompact flanges

$$F_{cr} = \left[F_y - \left(0.3F_y\right)\left(\frac{\lambda - \lambda_{pf}}{\lambda_{rf} - \lambda_{pf}} \right) \right] \tag{F5-8}$$

(c) For sections with slender flanges

$$F_{cr} = \frac{0.9Ek_c}{\left(\frac{b_f}{2t_f} \right)^2} \tag{F5-9}$$

where

$k_c = \dfrac{4}{\sqrt{h/t_w}}$ and shall not be taken less than 0.35 nor greater than 0.76 for calculation purposes

$\lambda = \dfrac{b_{fc}}{2t_{fc}}$

$\lambda_{pf} = \lambda_p$, the limiting slenderness for a compact flange, Table B4.1b

$\lambda_{rf} = \lambda_r$, the limiting slenderness for a noncompact flange, Table B4.1b

4. Tension Flange Yielding

(a) When $S_{xt} \geq S_{xc}$, the *limit state* of tension flange *yielding* does not apply.

(b) When $S_{xt} < S_{xc}$

$$M_n = F_y S_{xt} \tag{F5-10}$$

F6. I-SHAPED MEMBERS AND CHANNELS BENT ABOUT THEIR MINOR AXIS

This section applies to I-shaped members and channels bent about their minor axis.

The nominal flexural strength, M_n, shall be the lower value obtained according to the *limit states* of *yielding* (*plastic moment*) and flange *local buckling*.

1. Yielding

$$M_n = M_p = F_y Z_y \leq 1.6F_y S_y \tag{F6-1}$$

2. Flange Local Buckling

(a) For sections with compact flanges the *limit state* of flange *local buckling* does not apply.

User Note: All current ASTM A6 W, S, M, C and MC shapes except W21×48, W14×99, W14×90, W12×65, W10×12, W8×31, W8×10, W6×15, W6×9, W6×8.5 and M4×6 have compact flanges at $F_y = 50$ ksi (345 MPa).

(b) For sections with noncompact flanges

$$M_n = \left[M_p - \left(M_p - 0.7F_yS_y \right) \left(\frac{\lambda - \lambda_{pf}}{\lambda_{rf} - \lambda_{pf}} \right) \right] \tag{F6-2}$$

(c) For sections with slender flanges

$$M_n = F_{cr}S_y \tag{F6-3}$$

where

$$F_{cr} = \frac{0.69E}{\left(\frac{b}{t_f} \right)^2} \tag{F6-4}$$

$$\lambda = \frac{b}{t_f}$$

$\lambda_{pf} = \lambda_p$, the limiting slenderness for a compact flange, Table B4.1b
$\lambda_{rf} = \lambda_r$, the limiting slenderness for a noncompact flange, Table B4.1b
b = for flanges of I-shaped members, half the full-flange width, b_f; for flanges of channels, the full *nominal dimension* of the flange, in. (mm)
t_f = thickness of the flange, in. (mm)
S_y = elastic section modulus taken about the y-axis, in.^{3} (mm^3); for a channel, the minimum section modulus

F7. SQUARE AND RECTANGULAR HSS AND BOX-SHAPED MEMBERS

This section applies to square and rectangular *HSS*, and doubly symmetric box-shaped members bent about either axis, having compact or noncompact webs and compact, noncompact or slender flanges as defined in Section B4.1 for flexure.

The nominal flexural strength, M_n, shall be the lowest value obtained according to the *limit states* of *yielding (plastic moment)*, flange *local buckling* and web local buckling under pure flexure.

User Note: Very long rectangular HSS bent about the major axis are subject to *lateral-torsional buckling*; however, the Specification provides no strength equation for this limit state since *beam* deflection will control for all reasonable cases.

1. Yielding

$$M_n = M_p = F_yZ \tag{F7-1}$$

where

Z = plastic section modulus about the axis of bending, in.^{3} (mm^3)

2. Flange Local Buckling

(a) For *compact sections*, the *limit state* of flange *local buckling* does not apply.
(b) For sections with noncompact flanges

$$M_n = M_p - \left(M_p - F_y S\right)\left(3.57\frac{b}{t_f}\sqrt{\frac{F_y}{E}} - 4.0\right) \le M_p \qquad \text{(F7-2)}$$

(c) For sections with slender flanges

$$M_n = F_y S_e \qquad \text{(F7-3)}$$

where

S_e = effective section modulus determined with the effective width, b_e, of the compression flange taken as:

$$b_e = 1.92 t_f \sqrt{\frac{E}{F_y}}\left[1 - \frac{0.38}{b/t_f}\sqrt{\frac{E}{F_y}}\right] \le b \qquad \text{(F7-4)}$$

3. Web Local Buckling

(a) For *compact sections*, the *limit state* of web *local buckling* does not apply.
(b) For sections with noncompact webs

$$M_n = M_p - \left(M_p - F_y S\right)\left(0.305\frac{h}{t_w}\sqrt{\frac{F_y}{E}} - 0.738\right) \le M_p \qquad \text{(F7-5)}$$

F8. ROUND HSS

This section applies to round *HSS* having D/t ratios of less than $\dfrac{0.45E}{F_y}$.

The nominal flexural strength, M_n, shall be the lower value obtained according to the *limit states* of *yielding (plastic moment)* and *local buckling*.

1. Yielding

$$M_n = M_p = F_y Z \qquad \text{(F8-1)}$$

2. Local Buckling

(a) For *compact sections*, the *limit state* of flange *local buckling* does not apply.
(b) For *noncompact sections*

$$M_n = \left(\frac{0.021E}{\left(\frac{D}{t}\right)} + F_y\right) S \qquad \text{(F8-2)}$$

(c) For sections with slender walls

$$M_n = F_{cr} S \qquad \text{(F8-3)}$$

where

$$F_{cr} = \frac{0.33E}{\left(\frac{D}{t}\right)} \quad \text{(F8-4)}$$

S = elastic section modulus, in.^{3} (mm^3)
t = thickness of wall, in. (mm)

F9. TEES AND DOUBLE ANGLES LOADED IN THE PLANE OF SYMMETRY

This section applies to tees and double angles loaded in the plane of symmetry.

The nominal flexural strength, M_n, shall be the lowest value obtained according to the *limit states* of *yielding (plastic moment)*, *lateral-torsional buckling*, flange *local buckling*, and local buckling of tee stems.

1. Yielding

$$M_n = M_p \quad \text{(F9-1)}$$

where

(a) For stems in tension

$$M_p = F_y Z_x \le 1.6 M_y \quad \text{(F9-2)}$$

(b) For stems in compression

$$M_p = F_y Z_x \le M_y \quad \text{(F9-3)}$$

2. Lateral-Torsional Buckling

$$M_n = M_{cr} = \frac{\pi\sqrt{EI_y GJ}}{L_b}\left(B + \sqrt{1 + B^2}\right) \quad \text{(F9-4)}$$

where

$$B = \pm 2.3\left(\frac{d}{L_b}\right)\sqrt{\frac{I_y}{J}} \quad \text{(F9-5)}$$

The plus sign for B applies when the stem is in tension and the minus sign applies when the stem is in compression. If the tip of the stem is in compression anywhere along the *unbraced length*, the negative value of B shall be used.

3. Flange Local Buckling of Tees

(a) For sections with a compact flange in flexural compression, the *limit state* of flange *local buckling* does not apply.
(b) For sections with a noncompact flange in flexural compression

$$M_n = M_p - (M_p - 0.7F_yS_{xc})\left(\frac{\lambda - \lambda_{pf}}{\lambda_{rf} - \lambda_{pf}}\right) \le 1.6M_y \quad \text{(F9-6)}$$

(c) For sections with a slender flange in flexural compression

$$M_n = \frac{0.7ES_{xc}}{\left(\frac{b_f}{2t_f}\right)^2} \quad \text{(F9-7)}$$

where

S_{xc} = elastic section modulus referred to the compression flange, in.^{3} (mm^3)

$\lambda = \frac{b_f}{2t_f}$

$\lambda_{pf} = \lambda_p$, the limiting slenderness for a compact flange, Table B4.1b

$\lambda_{rf} = \lambda_r$, the limiting slenderness for a noncompact flange, Table B4.1b

User Note: For double angles with flange legs in compression, M_n based on local buckling is to be determined using the provisions of Section F10.3 with b/t of the flange legs and Equation F10-1 as an upper limit.

4. Local Buckling of Tee Stems in Flexural Compression

$$M_n = F_{cr}S_x \quad \text{(F9-8)}$$

where

S_x = elastic section modulus, in.^{3} (mm^3)

The critical *stress*, F_{cr}, is determined as follows:

(a) When $\frac{d}{t_w} \le 0.84\sqrt{\frac{E}{F_y}}$

$$F_{cr} = F_y \quad \text{(F9-9)}$$

(b) When $0.84\sqrt{\frac{E}{F_y}} < \frac{d}{t_w} \le 1.03\sqrt{\frac{E}{F_y}}$

$$F_{cr} = \left[2.55 - 1.84\frac{d}{t_w}\sqrt{\frac{F_y}{E}}\right]F_y \quad \text{(F9-10)}$$

(c) When $\frac{d}{t_w} > 1.03\sqrt{\frac{E}{F_y}}$

$$F_{cr} = \frac{0.69E}{\left(\frac{d}{t_w}\right)^2} \quad \text{(F9-11)}$$

User note: For double angles with web legs in compression, M_n based on *local buckling* is to be determined using the provisions of Section F10.3 with b/t of the web legs and Equation F10-1 as an upper limit.

F10. SINGLE ANGLES

This section applies to single angles with and without continuous lateral restraint along their length.

Single angles with continuous lateral-torsional restraint along the length are permitted to be designed on the basis of *geometric axis* (x, y) bending. Single angles without continuous lateral-torsional restraint along the length shall be designed using the provisions for *principal axis* bending except where the provision for bending about a geometric axis is permitted.

If the moment resultant has components about both principal axes, with or without axial *load*, or the moment is about one principal axis and there is axial load, the combined *stress* ratio shall be determined using the provisions of Section H2.

User Note: For geometric axis design, use section properties computed about the x- and y-axis of the angle, parallel and perpendicular to the legs. For principal axis design, use section properties computed about the major and minor principal axes of the angle.

The *nominal flexural strength*, M_n, shall be the lowest value obtained according to the *limit states* of *yielding (plastic moment)*, *lateral-torsional buckling*, and leg *local buckling*.

User Note: For bending about the minor axis, only the limit states of yielding and leg local buckling apply.

1. Yielding

$$M_n = 1.5M_y \tag{F10-1}$$

where

M_y = *yield moment* about the axis of bending, kip-in. (N-mm)

2. Lateral-Torsional Buckling

For single angles without continuous lateral-torsional restraint along the length

(a) When $M_e \le M_y$

$$M_n = \left(0.92 - \frac{0.17M_e}{M_y}\right)M_e \tag{F10-2}$$

(b) When $M_e > M_y$

$$M_n = \left(1.92 - 1.17\sqrt{\frac{M_y}{M_e}}\right) M_y \leq 1.5 M_y \tag{F10-3}$$

where

M_e, the elastic *lateral-torsional buckling* moment, is determined as follows:

(i) For bending about the major principal axis of equal-leg angles:

$$M_e = \frac{0.46 E b^2 t^2 C_b}{L_b} \tag{F10-4}$$

(ii) For bending about the major principal axis of unequal-leg angles:

$$M_e = \frac{4.9 E I_z C_b}{L_b^2}\left(\sqrt{\beta_w^2 + 0.052\left(\frac{L_b t}{r_z}\right)^2} + \beta_w\right) \tag{F10-5}$$

where

C_b is computed using Equation F1-1 with a maximum value of 1.5
L_b = laterally *unbraced length* of member, in. (mm)
I_z = minor principal axis moment of inertia, in.^{4} (mm^4)
r_z = radius of gyration about the minor principal axis, in. (mm)
t = thickness of angle leg, in. (mm)
β_w = section property for unequal leg angles, positive for short legs in compression and negative for long legs in compression. If the long leg is in compression anywhere along the unbraced length of the member, the negative value of β_w shall be used.

User Note: The equation for β_w and values for common angle sizes are listed in the Commentary.

(iii) For bending moment about one of the *geometric axes* of an equal-leg angle with no axial compression

(a) And with no lateral-torsional restraint:

(i) With maximum compression at the toe

$$M_e = \frac{0.66 E b^4 t C_b}{L_b^2}\left(\sqrt{1 + 0.78\left(\frac{L_b t}{b^2}\right)^2} - 1\right) \tag{F10-6a}$$

(ii) With maximum tension at the toe

$$M_e = \frac{0.66 E b^4 t C_b}{L_b^2}\left(\sqrt{1 + 0.78\left(\frac{L_b t}{b^2}\right)^2} + 1\right) \tag{F10-6b}$$

M_y shall be taken as 0.80 times the *yield moment* calculated using the geometric section modulus.

where

b = full width of leg in compression, in. (mm)

User Note: M_n may be taken as M_y for single angles with their vertical leg toe in compression, and having a span-to-depth ratio less than or equal to

$$\frac{1.64E}{F_y}\sqrt{\left(\frac{t}{b}\right)^2 - 1.4\frac{F_y}{E}}$$

(b) And with lateral-torsional restraint at the point of maximum moment only:

M_e shall be taken as 1.25 times M_e computed using Equation F10-6a or F10-6b.

M_y shall be taken as the yield moment calculated using the geometric section modulus.

3. Leg Local Buckling

The *limit state* of leg *local buckling* applies when the toe of the leg is in compression.

(a) For *compact sections,* the limit state of leg local buckling does not apply.
(b) For sections with noncompact legs:

$$M_n = F_y S_c\left(2.43 - 1.72\left(\frac{b}{t}\right)\sqrt{\frac{F_y}{E}}\right) \quad \text{(F10-7)}$$

(c) For sections with slender legs:

$$M_n = F_{cr} S_c \quad \text{(F10-8)}$$

where

$$F_{cr} = \frac{0.71E}{\left(\frac{b}{t}\right)^2} \quad \text{(F10-9)}$$

S_c = elastic section modulus to the toe in compression relative to the axis of bending, in.^{3} (mm^3). For bending about one of the *geometric axes* of an equal-leg angle with no lateral-torsional restraint, S_c shall be 0.80 of the geometric axis section modulus.

F11. RECTANGULAR BARS AND ROUNDS

This section applies to rectangular bars bent about either *geometric axis* and rounds.

The *nominal flexural strength*, M_n, shall be the lower value obtained according to the *limit states* of *yielding* (*plastic moment*) and *lateral-torsional buckling*.

1. Yielding

For rectangular bars with $\frac{L_b d}{t^2} \le \frac{0.08E}{F_y}$ bent about their major axis, rectangular bars bent about their minor axis and rounds:

$$M_n = M_p = F_y Z \le 1.6 M_y \tag{F11-1}$$

2. Lateral-Torsional Buckling

(a) For rectangular bars with $\frac{0.08E}{F_y} < \frac{L_b d}{t^2} \le \frac{1.9E}{F_y}$ bent about their major axis:

$$M_n = C_b \left[1.52 - 0.274 \left(\frac{L_b d}{t^2} \right) \frac{F_y}{E} \right] M_y \le M_p \tag{F11-2}$$

(b) For rectangular bars with $\frac{L_b d}{t^2} > \frac{1.9E}{F_y}$ bent about their major axis:

$$M_n = F_{cr} S_x \le M_p \tag{F11-3}$$

where

$$F_{cr} = \frac{1.9EC_b}{\frac{L_b d}{t^2}} \tag{F11-4}$$

L_b = length between points that are either braced against lateral displacement of the compression region, or between points braced to prevent twist of the cross section, in. (mm)
d = depth of rectangular bar, in. (mm)
t = width of rectangular bar parallel to axis of bending, in. (mm)

(c) For rounds and rectangular bars bent about their minor axis, the *limit state* of *lateral-torsional buckling* need not be considered.

F12. UNSYMMETRICAL SHAPES

This section applies to all unsymmetrical shapes, except single angles.

The *nominal flexural strength*, M_n, shall be the lowest value obtained according to the *limit states* of *yielding (yield moment), lateral-torsional buckling,* and *local buckling* where

$$M_n = F_n S_{min} \tag{F12-1}$$

where

S_{min} = lowest elastic section modulus relative to the axis of bending, in.^{3} (mm^3)

1. Yielding

$$F_n = F_y \tag{F12-2}$$

2. Lateral-Torsional Buckling

$$F_n = F_{cr} \le F_y \tag{F12-3}$$

where

F_{cr} = *lateral-torsional buckling stress* for the section as determined by analysis, ksi (MPa)

User Note: In the case of Z-shaped members, it is recommended that F_{cr} be taken as $0.5F_{cr}$ of a channel with the same flange and web properties.

3. Local Buckling

$$F_n = F_{cr} \le F_y \tag{F12-4}$$

where

F_{cr} = *local buckling stress* for the section as determined by analysis, ksi (MPa)

F13. PROPORTIONS OF BEAMS AND GIRDERS

1. Strength Reductions for Members With Holes in the Tension Flange

This section applies to rolled or *built-up shapes* and cover-plated *beams* with holes, proportioned on the basis of flexural strength of the gross section.

In addition to the *limit states* specified in other sections of this Chapter, the *nominal flexural strength*, M_n, shall be limited according to the limit state of *tensile rupture* of the tension flange.

(a) When $F_u A_{fn} \ge Y_t F_y A_{fg}$, the limit state of tensile rupture does not apply.
(b) When $F_u A_{fn} < Y_t F_y A_{fg}$, the nominal flexural strength, M_n, at the location of the holes in the tension flange shall not be taken greater than

$$M_n = \frac{F_u A_{fn}}{A_{fg}} S_x \tag{F13-1}$$

where

A_{fg} = gross area of tension flange, calculated in accordance with the provisions of Section B4.3a, in.^{2} (mm^2)
A_{fn} = *net area* of tension flange, calculated in accordance with the provisions of Section B4.3b, in.^{2} (mm^2)
Y_t = 1.0 for $F_y/F_u \le 0.8$
= 1.1 otherwise

2. Proportioning Limits for I-Shaped Members

Singly symmetric I-shaped members shall satisfy the following limit:

$$0.1 \le \frac{I_{yc}}{I_y} \le 0.9 \tag{F13-2}$$

I-shaped members with slender webs shall also satisfy the following limits:

(a) When $\frac{a}{h} \leq 1.5$

$$\left(\frac{h}{t_w}\right)_{max} = 12.0\sqrt{\frac{E}{F_y}} \tag{F13-3}$$

(b) When $\frac{a}{h} > 1.5$

$$\left(\frac{h}{t_w}\right)_{max} = \frac{0.40E}{F_y} \tag{F13-4}$$

where

a = clear distance between *transverse stiffeners*, in. (mm)

In unstiffened girders h/t_w shall not exceed 260. The ratio of the web area to the compression flange area shall not exceed 10.

3. Cover Plates

Flanges of welded *beams* or girders may be varied in thickness or width by splicing a series of plates or by the use of *cover plates*.

The total cross-sectional area of cover plates of bolted girders shall not exceed 70% of the total flange area.

High-strength bolts or welds connecting flange to web, or cover plate to flange, shall be proportioned to resist the total *horizontal shear* resulting from the bending *forces* on the girder. The longitudinal distribution of these bolts or intermittent welds shall be in proportion to the intensity of the shear.

However, the longitudinal spacing shall not exceed the maximum specified for compression or tension members in Section E6 or D4, respectively. Bolts or welds connecting flange to web shall also be proportioned to transmit to the web any *loads* applied directly to the flange, unless provision is made to transmit such loads by direct *bearing*.

Partial-length cover plates shall be extended beyond the theoretical cutoff point and the extended portion shall be attached to the beam or girder by high-strength bolts in a slip-critical *connection* or *fillet welds*. The attachment shall be adequate, at the applicable strength given in Sections J2.2, J3.8 or B3.11 to develop the cover plate's portion of the flexural strength in the beam or girder at the theoretical cutoff point.

For welded cover plates, the welds connecting the cover plate termination to the beam or girder shall have continuous welds along both edges of the cover plate in the length a', defined below, and shall be adequate to develop the cover plate's portion of the *available strength* of the beam or girder at the distance a' from the end of the cover plate.

(a) When there is a continuous weld equal to or larger than three-fourths of the plate thickness across the end of the plate

$$a' = w \tag{F13-5}$$

where

w = width of cover plate, in. (mm)

(b) When there is a continuous weld smaller than three-fourths of the plate thickness across the end of the plate

$$a' = 1.5w \tag{F13-6}$$

(c) When there is no weld across the end of the plate

$$a' = 2w \tag{F13-7}$$

4. Built-Up Beams

Where two or more *beams* or channels are used side-by-side to form a flexural member, they shall be connected together in compliance with Section E6.2. When concentrated *loads* are carried from one beam to another or distributed between the beams, *diaphragms* having sufficient *stiffness* to distribute the load shall be welded or bolted between the beams.

5. Unbraced Length for Moment Redistribution

For moment redistribution in *beams* according to Section B3.7, the laterally *unbraced length*, L_b, of the compression flange adjacent to the redistributed end moment locations shall not exceed L_m determined as follows.

(a) For doubly symmetric and singly symmetric I-shaped beams with the compression flange equal to or larger than the tension flange loaded in the plane of the web:

$$L_m = \left[0.12 + 0.076\left(\frac{M_1}{M_2}\right)\right]\left(\frac{E}{F_y}\right) r_y \tag{F13-8}$$

(b) For solid rectangular bars and symmetric box beams bent about their major axis:

$$L_m = \left[0.17 + 0.10\left(\frac{M_1}{M_2}\right)\right]\left(\frac{E}{F_y}\right) r_y \geq 0.10\left(\frac{E}{F_y}\right) r_y \tag{F13-9}$$

where

F_y = *specified minimum yield stress* of the compression flange, ksi (MPa)

M_1 = smaller moment at end of unbraced length, kip-in. (N-mm)

M_2 = larger moment at end of unbraced length, kip-in. (N-mm)

r_y = radius of gyration about y-axis, in. (mm)

(M_1/M_2) is positive when moments cause *reverse curvature* and negative for *single curvature*

There is no limit on L_b for members with round or square cross sections or for any beam bent about its minor axis.

CHAPTER G
DESIGN OF MEMBERS FOR SHEAR

This chapter addresses webs of singly or doubly symmetric members subject to shear in the plane of the web, single angles and *HSS* sections, and shear in the weak direction of singly or doubly symmetric shapes.

The chapter is organized as follows:

G1. General Provisions
G2. Members with Unstiffened or Stiffened Webs
G3. Tension Field Action
G4. Single Angles
G5. Rectangular HSS and Box-Shaped Members
G6. Round HSS
G7. Weak Axis Shear in Doubly Symmetric and Singly Symmetric Shapes
G8. Beams and Girders with Web Openings

User Note: For cases not included in this chapter, the following sections apply:

- H3.3 Unsymmetric sections
- J4.2 Shear strength of connecting elements
- J10.6 Web *panel zone* shear

G1. GENERAL PROVISIONS

Two methods of calculating shear strength are presented below. The method presented in Section G2 does not utilize the post *buckling strength* of the member (*tension field action*). The method presented in Section G3 utilizes tension field action.

The *design shear strength*, $\phi_v V_n$, and the *allowable shear strength*, V_n/Ω_v, shall be determined as follows:

For all provisions in this chapter except Section G2.1(a):

$$\phi_v = 0.90 \text{ (LRFD)} \qquad \Omega_v = 1.67 \text{ (ASD)}$$

G2. MEMBERS WITH UNSTIFFENED OR STIFFENED WEBS

1. Shear Strength

This section applies to webs of singly or doubly symmetric members and channels subject to shear in the plane of the web.

The *nominal shear strength*, V_n, of unstiffened or stiffened webs according to the *limit states* of *shear yielding* and *shear buckling*, is

$$V_n = 0.6F_yA_wC_v \qquad \text{(G2-1)}$$

(a) For webs of rolled I-shaped members with $h/t_w \le 2.24\sqrt{E/F_y}$:

$$\phi_v = 1.00 \text{ (LRFD)} \qquad \Omega_v = 1.50 \text{ (ASD)}$$

and

$$C_v = 1.0 \tag{G2-2}$$

User Note: All current ASTM A6 W, S and HP shapes except W44×230, W40×149, W36×135, W33×118, W30×90, W24×55, W16×26 and W12×14 meet the criteria stated in Section G2.1(a) for $F_y = 50$ ksi (345 MPa).

(b) For webs of all other doubly symmetric shapes and singly symmetric shapes and channels, except round *HSS*, the web shear coefficient, C_v, is determined as follows:

(i) When $h/t_w \le 1.10\sqrt{k_v E/F_y}$

$$C_v = 1.0 \tag{G2-3}$$

(ii) When $1.10\sqrt{k_v E/F_y} < h/t_w \le 1.37\sqrt{k_v E/F_y}$

$$C_v = \frac{1.10\sqrt{k_v E/F_y}}{h/t_w} \tag{G2-4}$$

(iii) When $h/t_w > 1.37\sqrt{k_v E/F_y}$

$$C_v = \frac{1.51 k_v E}{(h/t_w)^2 F_y} \tag{G2-5}$$

where

A_w = area of web, the overall depth times the web thickness, dt_w, in.^{2} (mm^2)
h = for rolled shapes, the clear distance between flanges less the fillet or corner radii, in. (mm)
= for built-up welded sections, the clear distance between flanges, in. (mm)
= for built-up bolted sections, the distance between *fastener* lines, in. (mm)
= for tees, the overall depth, in. (mm)
t_w = thickness of web, in. (mm)

The web plate *shear buckling* coefficient, k_v, is determined as follows:

(i) For webs without *transverse stiffeners* and with $h/t_w < 260$:

$$k_v = 5$$

except for the stem of tee shapes where $k_v = 1.2$.

(ii) For webs with transverse stiffeners:

$$k_v = 5 + \frac{5}{(a/h)^2} \tag{G2-6}$$

$$= 5 \text{ when } a/h > 3.0 \text{ or } a/h > \left[\frac{260}{(h/t_w)}\right]^2$$

where

a = clear distance between transverse stiffeners, in. (mm)

User Note: For all ASTM A6 W, S, M and HP shapes except M12.5×12.4, M12.5×11.6, M12×11.8, M12×10.8, M12×10, M10×8 and M10×7.5, when $F_y = 50$ ksi (345 MPa), $C_v = 1.0$.

2. Transverse Stiffeners

Transverse stiffeners are not required where $h/t_w \le 2.46\sqrt{E/F_y}$, or where the available shear strength provided in accordance with Section G2.1 for $k_v = 5$ is greater than the *required shear strength*.

The moment of inertia, I_{st}, of transverse stiffeners used to develop the available web shear strength, as provided in Section G2.1, about an axis in the web center for stiffener pairs or about the face in contact with the web plate for single stiffeners, shall meet the following requirement

$$I_{st} \ge bt_w^3 j \tag{G2-7}$$

where

$$j = \frac{2.5}{(a/h)^2} - 2 \ge 0.5 \tag{G2-8}$$

and b is the smaller of the dimensions a and h

Transverse stiffeners are permitted to be stopped short of the tension flange, provided *bearing* is not needed to transmit a concentrated *load* or reaction. The weld by which transverse stiffeners are attached to the web shall be terminated not less than four times nor more than six times the web thickness from the near toe of the web-to-flange weld. When single stiffeners are used, they shall be attached to the compression flange, if it consists of a rectangular plate, to resist any uplift tendency due to torsion in the flange.

Bolts connecting stiffeners to the girder web shall be spaced not more than 12 in. (305 mm) on center. If intermittent *fillet weld*s are used, the clear distance between welds shall not be more than 16 times the web thickness nor more than 10 in. (250 mm).

G3. TENSION FIELD ACTION

1. Limits on the Use of Tension Field Action

Consideration of *tension field action* is permitted for flanged members when the web plate is supported on all four sides by flanges or *stiffeners*. Consideration of tension field action is not permitted:

(a) for *end panels* in all members with *transverse stiffeners*;

(b) when a/h exceeds 3.0 or $\left[260/(h/t_w)\right]^2$;

(c) when $2A_w/(A_{fc}+A_{ft}) > 2.5$; or

(d) when h/b_{fc} or $h/b_{ft} > 6.0$.

where

A_{fc} = area of compression flange, in.^{2} (mm^2)
A_{ft} = area of tension flange, in.^{2} (mm^2)
b_{fc} = width of compression flange, in. (mm)
b_{ft} = width of tension flange, in. (mm)

In these cases, the *nominal shear strength*, V_n, shall be determined according to the provisions of Section G2.

2. Shear Strength With Tension Field Action

When *tension field action* is permitted according to Section G3.1, the nominal shear strength, V_n, with tension field action, according to the *limit state* of tension field *yielding*, shall be

(a) When $h/t_w \le 1.10\sqrt{k_v E/F_y}$

$$V_n = 0.6F_yA_w \tag{G3-1}$$

(b) When $h/t_w > 1.10\sqrt{k_v E/F_y}$

$$V_n = 0.6F_yA_w\left(C_v + \frac{1-C_v}{1.15\sqrt{1+(a/h)^2}}\right) \tag{G3-2}$$

where

k_v and C_v are as defined in Section G2.1

3. Transverse Stiffeners

Transverse stiffeners subject to *tension field action* shall meet the requirements of Section G2.2 and the following limitations:

(1) $$(b/t)_{st} \le 0.56\sqrt{\frac{E}{F_{yst}}} \tag{G3-3}$$

(2) $$I_{st} \ge I_{st1} + (I_{st2} - I_{st1})\left[\frac{V_r - V_{c1}}{V_{c2} - V_{c1}}\right] \tag{G3-4}$$

where

$(b/t)_{st}$ = width-to-thickness ratio of the *stiffener*

F_{yst} = *specified minimum yield stress* of the stiffener material, ksi (MPa)

I_{st} = moment of inertia of the transverse stiffeners about an axis in the web center for stiffener pairs, or about the face in contact with the web plate for single stiffeners, in.^{4} (mm^4)

I_{st1} = minimum moment of inertia of the transverse stiffeners required for development of the web *shear buckling* resistance in Section G2.2, in.^{4} (mm^4)

I_{st2} = minimum moment of inertia of the transverse stiffeners required for development of the full web shear buckling plus the web tension field resistance, $V_r = V_{c2}$, in.^{4} (mm^4)

$$= \frac{h^4 \rho_{st}^{1.3}}{40}\left(\frac{F_{yw}}{E}\right)^{1.5} \qquad \text{(G3-5)}$$

V_r = larger of the *required shear strengths* in the adjacent web panels using *LRFD* or *ASD load combinations*, kips (N)

V_{c1} = smaller of the *available shear strengths in the adjacent web panels* with V_n as defined in Section G2.1, kips (N)

V_{c2} = smaller of the *available shear strengths* in the adjacent web panels with V_n as defined in Section G3.2, kips (N)

ρ_{st} = the larger of F_{yw}/F_{yst} and 1.0

F_{yw} = specified minimum yield stress of the web material, ksi (MPa)

G4. SINGLE ANGLES

The nominal shear strength, V_n, of a single angle leg shall be determined using Equation G2-1 and Section G2.1(b) with $A_w = bt$

where

b = width of the leg resisting the shear *force*, in. (mm)

t = thickness of angle leg, in. (mm)

$h/t_w = b/t$

$k_v = 1.2$

G5. RECTANGULAR HSS AND BOX-SHAPED MEMBERS

The *nominal shear strength*, V_n, of rectangular *HSS* and box members shall be determined using the provisions of Section G2.1 with $A_w = 2ht$

where

h = width resisting the shear *force,* taken as the clear distance between the flanges less the inside corner radius on each side, in. (mm)

t = *design wall thickness*, equal to 0.93 times the nominal wall thickness for electric-resistance-welded (ERW) HSS and equal to the nominal thickness for submerged-arc-welded (SAW) HSS, in. (mm)

$t_w = t$, in. (mm)

$k_v = 5$

If the corner radius is not known, h shall be taken as the corresponding outside dimension minus 3 times the thickness.

G6. ROUND HSS

The *nominal shear strength*, V_n, of round *HSS*, according to the *limit states* of *shear yielding* and *shear buckling*, shall be determined as:

$$V_n = F_{cr}A_g/2 \tag{G6-1}$$

where

F_{cr} shall be the larger of

$$F_{cr} = \frac{1.60E}{\sqrt{\frac{L_v}{D}}\left(\frac{D}{t}\right)^{\frac{5}{4}}} \tag{G6-2a}$$

and

$$F_{cr} = \frac{0.78E}{\left(\frac{D}{t}\right)^{\frac{3}{2}}} \tag{G6-2b}$$

but shall not exceed $0.6F_y$

A_g = gross cross-sectional area of member, in.^{2} (mm^2)

D = outside diameter, in. (mm)

L_v = distance from maximum to zero shear *force*, in. (mm)

t = *design wall thickness*, equal to 0.93 times the nominal wall thickness for ERW HSS and equal to the nominal thickness for SAW HSS, in. (mm)

User Note: The shear buckling equations, Equations G6-2a and G6-2b, will control for D/t over 100, high-strength steels, and long lengths. For standard sections, shear yielding will usually control.

G7. WEAK AXIS SHEAR IN DOUBLY SYMMETRIC AND SINGLY SYMMETRIC SHAPES

For doubly and singly symmetric shapes loaded in the *weak axis* without torsion, the nominal shear strength, V_n, for each shear resisting element shall be determined using Equation G2-1 and Section G2.1(b) with $A_w = b_f t_f$, $h/t_w = b/t_f$, $k_v = 1.2$, and

b = for flanges of I-shaped members, half the full-flange width, b_f; for flanges of channels, the full *nominal dimension* of the flange, in. (mm)

User Note: For all ASTM A6 W, S, M and HP shapes, when $F_y \leq 50$ ksi (345 MPa), $C_v = 1.0$.

G8. BEAMS AND GIRDERS WITH WEB OPENINGS

The effect of all web openings on the shear strength of steel and *composite beams* shall be determined. Adequate reinforcement shall be provided when the *required strength* exceeds the *available strength* of the member at the opening.

CHAPTER H

DESIGN OF MEMBERS FOR COMBINED FORCES AND TORSION

This chapter addresses members subject to axial *force* and flexure about one or both axes, with or without torsion, and members subject to torsion only.

The chapter is organized as follows:

H1. Doubly and Singly Symmetric Members Subject to Flexure and Axial Force
H2. Unsymmetric and Other Members Subject to Flexure and Axial Force
H3. Members Subject to Torsion and Combined Torsion, Flexure, Shear and/or Axial Force
H4. Rupture of Flanges with Holes Subject to Tension

User Note: For *composite* members, see Chapter I.

H1. DOUBLY AND SINGLY SYMMETRIC MEMBERS SUBJECT TO FLEXURE AND AXIAL FORCE

1. Doubly and Singly Symmetric Members Subject to Flexure and Compression

The interaction of flexure and compression in doubly symmetric members and singly symmetric members for which $0.1 \le (I_{yc}/I_y) \le 0.9$, constrained to bend about a *geometric axis* (x and/or y) shall be limited by Equations H1-1a and H1-1b, where I_{yc} is the moment of inertia of the compression flange about the y-axis, in.^{4} (mm^4).

User Note: Section H2 is permitted to be used in lieu of the provisions of this section.

(a) When $\dfrac{P_r}{P_c} \ge 0.2$

$$\frac{P_r}{P_c} + \frac{8}{9}\left(\frac{M_{rx}}{M_{cx}} + \frac{M_{ry}}{M_{cy}}\right) \le 1.0 \qquad \text{(H1-1a)}$$

(b) When $\dfrac{P_r}{P_c} < 0.2$

$$\frac{P_r}{2P_c} + \left(\frac{M_{rx}}{M_{cx}} + \frac{M_{ry}}{M_{cy}}\right) \le 1.0 \qquad \text{(H1-1b)}$$

where

P_r = *required axial strength* using *LRFD* or *ASD load combinations,* kips (N)
P_c = *available axial strength*, kips (N)

M_r = *required flexural strength* using LRFD or ASD load combinations, kip-in. (N-mm)
M_c = *available flexural strength*, kip-in. (N-mm)
x = subscript relating symbol to *strong axis* bending
y = subscript relating symbol to *weak axis* bending

For design according to Section B3.3 (LRFD):

P_r = required axial strength using LRFD load combinations, kips (N)
$P_c = \phi_c P_n$ = *design axial strength*, determined in accordance with Chapter E, kips (N)
M_r = required flexural strength using LRFD load combinations, kip-in. (N-mm)
$M_c = \phi_b M_n$ = *design flexural strength* determined in accordance with Chapter F, kip-in. (N-mm)
ϕ_c = *resistance factor* for compression = 0.90
ϕ_b = resistance factor for flexure = 0.90

For design according to Section B3.4 (ASD):

P_r = required axial strength using ASD load combinations, kips (N)
$P_c = P_n/\Omega_c$ = *allowable axial strength*, determined in accordance with Chapter E, kips (N)
M_r = required flexural strength using ASD load combinations, kip-in. (N-mm)
$M_c = M_n/\Omega_b$ = *allowable flexural strength* determined in accordance with Chapter F, kip-in. (N-mm)
Ω_c = *safety factor* for compression = 1.67
Ω_b = safety factor for flexure = 1.67

2. Doubly and Singly Symmetric Members Subject to Flexure and Tension

The interaction of flexure and tension in doubly symmetric members and singly symmetric members constrained to bend about a *geometric axis* (x and/or y) shall be limited by Equations H1-1a and H1-1b

where

For design according to Section B3.3 (LRFD):

P_r = *required axial strength* using *LRFD load combinations*, kips (N)
$P_c = \phi_t P_n$ = *design axial strength*, determined in accordance with Section D2, kips (N)
M_r = required flexural strength using LRFD load combinations, kip-in. (N-mm)
$M_c = \phi_b M_n$ = design flexural strength determined in accordance with Chapter F, kip-in. (N-mm)
ϕ_t = *resistance factor* for tension (see Section D2)
ϕ_b = resistance factor for flexure = 0.90

For design according to Section B3.4 (ASD):

P_r = required axial strength using *ASD load combinations*, kips (N)
$P_c = P_n/\Omega_t$ = *allowable axial strength*, determined in accordance with Section D2, kips (N)

M_r = required flexural strength using ASD load combinations, kip-in. (N-mm)
$M_c = M_n/\Omega_b$ = *allowable flexural strength* determined in accordance with Chapter F, kip-in. (N-mm)
Ω_t = *safety factor* for tension (see Section D2)
Ω_b = safety factor for flexure = 1.67

For doubly symmetric members, C_b in Chapter F may be multiplied by $\sqrt{1+\frac{\alpha P_r}{P_{ey}}}$ for axial tension that acts concurrently with flexure

where

$$P_{ey} = \frac{\pi^2 EI_y}{L_b^2}$$

and

$\alpha = 1.0$ (LRFD); $\alpha = 1.6$ (ASD)

A more detailed analysis of the interaction of flexure and tension is permitted in lieu of Equations H1-1a and H1-1b.

3. Doubly Symmetric Rolled Compact Members Subject to Single Axis Flexure and Compression

For doubly symmetric rolled compact members with $(KL)_z \le (KL)_y$ subjected to flexure and compression with moments primarily about their major axis, it is permissible to consider the two independent *limit states*, *in-plane instability* and *out-of-plane buckling* or *lateral-torsional buckling*, separately in lieu of the combined approach provided in Section H1.1.

For members with $M_{ry}/M_{cy} \ge 0.05$, the provisions of Section H1.1 shall be followed.

(a) For the limit state of in-plane instability, Equations H1-1 shall be used with P_c, M_{rx} and M_{cx} determined in the plane of bending.
(b) For the limit state of out-of-plane buckling and lateral-torsional buckling:

$$\frac{P_r}{P_{cy}}\left(1.5-0.5\frac{P_r}{P_{cy}}\right)+\left(\frac{M_{rx}}{C_b M_{cx}}\right)^2 \le 1.0 \qquad \text{(H1-2)}$$

where

P_{cy} = *available compressive strength* out of the plane of bending, kips (N)
C_b = lateral-torsional buckling modification factor determined from Section F1
M_{cx} = *available lateral-torsional strength* for *strong axis* flexure determined in accordance with Chapter F using $C_b = 1.0$, kip-in. (N-mm)

User Note: In Equation H1-2, $C_b M_{cx}$ may be larger than $\phi_b M_{px}$ in LRFD or M_{px}/Ω_b in ASD. The yielding resistance of the *beam-column* is captured by Equations H1-1.

H2. UNSYMMETRIC AND OTHER MEMBERS SUBJECT TO FLEXURE AND AXIAL FORCE

This section addresses the interaction of flexure and axial *stress* for shapes not covered in Section H1. It is permitted to use the provisions of this Section for any shape in lieu of the provisions of Section H1.

$$\left|\frac{f_{ra}}{F_{ca}}+\frac{f_{rbw}}{F_{cbw}}+\frac{f_{rbz}}{F_{cbz}}\right|\le 1.0 \qquad \text{(H2-1)}$$

where

f_{ra} = *required axial stress* at the point of consideration using *LRFD* or *ASD load combinations*, ksi (MPa)

F_{ca} = *available axial stress* at the point of consideration, ksi (MPa)

f_{rbw}, f_{rbz} = required flexural stress at the point of consideration using LRFD or ASD load combinations, ksi (MPa)

F_{cbw}, F_{cbz} = *available flexural stress* at the point of consideration, ksi (MPa)

w = subscript relating symbol to major principal axis bending

z = subscript relating symbol to minor principal axis bending

For design according to Section B3.3 (LRFD):

f_{ra} = required axial stress at the point of consideration using LRFD load combinations, ksi (MPa)

F_{ca} = $\phi_c F_{cr}$ = *design axial stress*, determined in accordance with Chapter E for compression or Section D2 for tension, ksi (MPa)

f_{rbw}, f_{rbz} = required flexural stress at the point of consideration using LRFD or ASD load combinations, ksi (MPa)

F_{cbw}, F_{cbz} = $\dfrac{\phi_b M_n}{S}$ = *design flexural stress* determined in accordance with Chapter F, ksi (MPa). Use the section modulus for the specific location in the cross section and consider the sign of the stress.

ϕ_c = *resistance factor* for compression = 0.90

ϕ_t = resistance factor for tension (Section D2)

ϕ_b = resistance factor for flexure = 0.90

For design according to Section B3.4 (ASD):

f_{ra} = required axial stress at the point of consideration using ASD load combinations, ksi (MPa)

F_{ca} = $\dfrac{F_{cr}}{\Omega_c}$ = *allowable axial stress* determined in accordance with Chapter E for compression, or Section D2 for tension, ksi (MPa)

f_{rbw}, f_{rbz} = required flexural stress at the point of consideration using LRFD or ASD load combinations, ksi (MPa)

F_{cbw}, F_{cbz} = $\dfrac{M_n}{\Omega_b S}$ = *allowable flexural stress* determined in accordance with Chapter F, ksi (MPa). Use the section modulus for the specific location in the cross section and consider the sign of the stress.

Ω_c = *safety factor* for compression = 1.67

Ω_t = safety factor for tension (see Section D2)
Ω_b = safety factor for flexure = 1.67

Equation H2-1 shall be evaluated using the principal bending axes by considering the sense of the flexural stresses at the critical points of the cross section. The flexural terms are either added to or subtracted from the axial term as appropriate. When the axial *force* is compression, *second order effects* shall be included according to the provisions of Chapter C.

A more detailed analysis of the interaction of flexure and tension is permitted in lieu of Equation H2-1.

H3. MEMBERS SUBJECT TO TORSION AND COMBINED TORSION, FLEXURE, SHEAR AND/OR AXIAL FORCE

1. Round and Rectangular HSS Subject to Torsion

The *design torsional strength*, $\phi_T T_n$, and the *allowable torsional strength*, T_n/Ω_T, for round and rectangular *HSS* according to the *limit states* of *torsional yielding* and *torsional buckling* shall be determined as follows:

$$\phi_T = 0.90 \text{ (LRFD)} \qquad \Omega_T = 1.67 \text{ (ASD)}$$

$$T_n = F_{cr}C \tag{H3-1}$$

where
C is the HSS torsional constant

The critical *stress*, F_{cr}, shall be determined as follows:

(a) For round HSS, F_{cr} shall be the larger of

(i)
$$F_{cr} = \frac{1.23E}{\sqrt{\frac{L}{D}}\left(\frac{D}{t}\right)^{\frac{5}{4}}} \tag{H3-2a}$$

and

(ii)
$$F_{cr} = \frac{0.60E}{\left(\frac{D}{t}\right)^{\frac{3}{2}}} \tag{H3-2b}$$

but shall not exceed $0.6F_y$,

where
L = length of the member, in. (mm)
D = outside diameter, in. (mm)

(b) For rectangular HSS

(i) When $h/t \le 2.45\sqrt{E/F_y}$

$$F_{cr} = 0.6F_y \tag{H3-3}$$

(ii) When $2.45\sqrt{\frac{E}{F_y}} < h/t \le 3.07\sqrt{\frac{E}{F_y}}$

$$F_{cr} = \frac{0.6F_y\left(2.45\sqrt{E/F_y}\right)}{\left(\frac{h}{t}\right)} \tag{H3-4}$$

(iii) When $3.07\sqrt{\frac{E}{F_y}} < h/t \le 260$

$$F_{cr} = \frac{0.458\pi^2 E}{\left(\frac{h}{t}\right)^2} \tag{H3-5}$$

where

h = *flat width* of longer side as defined in Section B4.1b(d), in. (mm)
t = *design wall thickness* defined in Section B4.2, in. (mm)

User Note: The torsional constant, C, may be conservatively taken as:

For round HSS: $C = \frac{\pi(D-t)^2 t}{2}$

For rectangular HSS: $C = 2(B-t)(H-t)t - 4.5(4-\pi)t^3$

2. HSS Subject to Combined Torsion, Shear, Flexure and Axial Force

When the *required torsional strength*, T_r, is less than or equal to 20% of the *available torsional strength*, T_c, the interaction of torsion, shear, flexure and/or axial *force* for *HSS* shall be determined by Section H1 and the torsional effects shall be neglected. When T_r exceeds 20% of T_c, the interaction of torsion, shear, flexure and/or axial force shall be limited, at the point of consideration, by

$$\left(\frac{P_r}{P_c} + \frac{M_r}{M_c}\right) + \left(\frac{V_r}{V_c} + \frac{T_r}{T_c}\right)^2 \le 1.0 \tag{H3-6}$$

where

For design according to Section B3.3 (LRFD):

P_r = *required axial strength* using *LRFD load combinations*, kips (N)
$P_c = \phi P_n$ = *design tensile* or *compressive strength* in accordance with Chapter D or E, kips (N)
M_r = *required flexural strength* using LRFD load combinations, kip-in. (N-mm)
$M_c = \phi_b M_n$ = *design flexural strength* in accordance with Chapter F, kip-in. (N-mm)
V_r = *required shear strength* using LRFD load combinations, kips (N)

V_c = $\phi_v V_n$ = *design shear strength* in accordance with Chapter G, kips (N)
T_r = required torsional strength using LRFD load combinations, kip-in. (N-mm)
T_c = $\phi_T T_n$ = *design torsional strength* in accordance with Section H3.1, kip-in. (N-mm)

For design according to Section B3.4 (ASD):

P_r = required axial strength using *ASD load combinations*, kips (N)
P_c = P_n/Ω = *allowable tensile* or *compressive strength* in accordance with Chapter D or E, kips (N)
M_r = required flexural strength using ASD load combinations, kip-in. (N-mm)
M_c = M_n/Ω_b = *allowable flexural strength* in accordance with Chapter F, kip-in. (N-mm)
V_r = required shear strength using ASD load combinations, kips (N)
V_c = V_n/Ω_v = *allowable shear strength* in accordance with Chapter G, kips (N)
T_r = required torsional strength using ASD load combinations, kip-in. (N-mm)
T_c = T_n/Ω_T = *allowable torsional strength* in accordance with Section H3.1, kip-in. (N-mm)

3. Non-HSS Members Subject to Torsion and Combined Stress

The *available torsional strength* for non-*HSS* members shall be the lowest value obtained according to the *limit states* of *yielding* under normal *stress*, *shear yielding* under shear stress, or *buckling*, determined as follows:

$$\phi_T = 0.90 \text{ (LRFD)} \qquad \Omega_T = 1.67 \text{ (ASD)}$$

(a) For the limit state of yielding under normal stress

$$F_n = F_y \tag{H3-7}$$

(b) For the limit state of shear yielding under shear stress

$$F_n = 0.6F_y \tag{H3-8}$$

(c) For the limit state of buckling

$$F_n = F_{cr} \tag{H3-9}$$

where

F_{cr} = buckling stress for the section as determined by analysis, ksi (MPa)

Some constrained *local yielding* is permitted adjacent to areas that remain elastic.

H4. RUPTURE OF FLANGES WITH HOLES SUBJECT TO TENSION

At locations of bolt holes in flanges subject to tension under combined axial force and major axis flexure, flange *tensile rupture strength* shall be limited by Equation H4-1. Each flange subject to tension due to axial force and flexure shall be checked separately.

$$\frac{P_r}{P_c} + \frac{M_{rx}}{M_{cx}} \le 1.0 \tag{H4-1}$$

where

P_r = required axial strength of the member at the location of the bolt holes, positive in tension, negative in compression, kips (N)

P_c = available axial strength for the *limit state* of tensile rupture of the net section at the location of bolt holes, kips (N)

M_{rx} = required flexural strength at the location of the bolt holes; positive for tension in the flange under consideration, negative for compression, kip-in. (N-mm)

M_{cx} = available flexural strength about x-axis for the limit state of tensile rupture of the flange, determined according to Section F13.1. When the limit state of tensile rupture in flexure does not apply, use the plastic bending moment, M_p, determined with bolt holes not taken into consideration, kip-in. (N-mm)

For design according to Section B3.3 (LRFD):

P_r = required axial strength using *LRFD load combinations*, kips (N)

$P_c = \phi_t P_n$ = design axial strength for the limit state of tensile rupture, determined in accordance with Section D2(b), kips (N)

M_{rx} = required flexural strength using LRFD load combinations, kip-in. (N-mm)

$M_{cx} = \phi_b M_n$ = design flexural strength determined in accordance with Section F13.1 or the plastic bending moment, M_p, determined with bolt holes not taken into consideration, as applicable, kip-in. (N-mm)

ϕ_t = *resistance factor* for tensile rupture = 0.75

ϕ_b = resistance factor for flexure = 0.90

For design according to Section B3.4 (ASD):

P_r = required axial strength using *ASD load combinations*, kips (N)

$P_c = \dfrac{P_n}{\Omega_t}$ = allowable axial strength for the limit state of tensile rupture, determined in accordance with Section D2(b), kips (N)

M_{rx} = required flexural strength using ASD load combinations, kip-in. (N-mm)

$M_{cx} = \dfrac{M_n}{\Omega_b}$ = allowable flexural strength determined in accordance with Section F13.1, or the plastic bending moment, M_p, determined with bolt holes not taken into consideration, as applicable, kip-in. (N-mm)

Ω_t = *safety factor* for tensile rupture = 2.00

Ω_b = safety factor for flexure = 1.67

CHAPTER I

DESIGN OF COMPOSITE MEMBERS

This chapter addresses *composite* members composed of rolled or built-up *structural steel* shapes or *HSS* and structural concrete acting together, and steel *beams* supporting a reinforced concrete slab so interconnected that the beams and the slab act together to resist bending. Simple and continuous *composite beams* with *steel headed stud anchors, concrete-encased,* and *concrete filled beams*, constructed with or without temporary shores, are included.

The chapter is organized as follows:

I1. General Provisions
I2. Axial Force
I3. Flexure
I4. Shear
I5. Combined Axial Force and Flexure
I6. Load Transfer
I7. Composite Diaphragms and Collector Beams
I8. Steel Anchors
I9. Special Cases

I1. GENERAL PROVISIONS

In determining *load effects* in members and *connections* of a structure that includes *composite* members, consideration shall be given to the effective sections at the time each increment of *load* is applied.

1. Concrete and Steel Reinforcement

The design, detailing and material properties related to the concrete and reinforcing steel portions of composite construction shall comply with the reinforced concrete and reinforcing bar design *specifications* stipulated by the *applicable building code*. Additionally, the provisions in ACI 318 shall apply with the following exceptions and limitations:

(1) ACI 318 Sections 7.8.2 and 10.13, and Chapter 21 shall be excluded in their entirety.
(2) Concrete and steel reinforcement material limitations shall be as specified in Section I1.3.
(3) *Transverse reinforcement* limitations shall be as specified in Section I2.1a(2), in addition to those specified in ACI 318.
(4) The minimum longitudinal reinforcing ratio for *encased composite members* shall be as specified in Section I2.1a(3).

Concrete and steel reinforcement components designed in accordance with ACI 318 shall be based on a level of loading corresponding to *LRFD load combinations*.

User Note: It is the intent of the Specification that the concrete and reinforcing steel portions of composite concrete members be detailed utilizing the noncomposite provisions of ACI 318 as modified by the Specification. All requirements specific to composite members are covered in the Specification.

Note that the design basis for ACI 318 is strength design. Designers using ASD for steel must be conscious of the different *load factors*.

2. Nominal Strength of Composite Sections

The *nominal strength* of composite sections shall be determined in accordance with the *plastic stress distribution method* or the *strain compatibility method* as defined in this section.

The *tensile strength* of the concrete shall be neglected in the determination of the nominal strength of composite members.

Local buckling effects shall be considered for *filled composite members* as defined in Section I1.4. Local buckling effects need not be considered for *encased composite members*.

2a. Plastic Stress Distribution Method

For the *plastic stress distribution method*, the *nominal strength* shall be computed assuming that steel components have reached a *stress* of F_y in either tension or compression and concrete components in compression due to axial force and/or flexure have reached a stress of $0.85f'_c$. For round *HSS* filled with concrete, a stress of $0.95f'_c$ is permitted to be used for concrete components in compression due to axial force and/or flexure to account for the effects of concrete confinement.

2b. Strain Compatibility Method

For the *strain compatibility method*, a linear distribution of strains across the section shall be assumed, with the maximum concrete compressive strain equal to 0.003 in./in. (mm/mm). The stress-strain relationships for steel and concrete shall be obtained from tests or from published results for similar materials.

User Note: The strain compatibility method should be used to determine *nominal strength* for irregular sections and for cases where the steel does not exhibit elasto-plastic behavior. General guidelines for the strain compatibility method for encased members subjected to axial *load*, flexure or both are given in AISC Design Guide 6 and ACI 318.

3. Material Limitations

For concrete, *structural steel*, and steel reinforcing bars in composite systems, the following limitations shall be met, unless justified by testing or analysis:

(1) For the determination of the *available strength*, concrete shall have a compressive strength, f'_c, of not less than 3 ksi (21 MPa) nor more than 10 ksi (70 MPa) for normal weight concrete and not less than 3 ksi (21 MPa) nor more than 6 ksi (42 MPa) for *lightweight concrete.*

User Note: Higher strength concrete material properties may be used for *stiffness* calculations but may not be relied upon for strength calculations unless justified by testing or analysis.

(2) The *specified minimum yield stress* of structural steel and reinforcing bars used in calculating the strength of composite members shall not exceed 75 ksi (525 MPa).

4. Classification of Filled Composite Sections for Local Buckling

For compression, filled composite sections are classified as compact, noncompact or slender. For a section to qualify as compact, the maximum width-to-thickness ratio of its compression steel elements shall not exceed the limiting width-to-thickness ratio, λ_p, from Table I1.1a. If the maximum width-to-thickness ratio of one or more steel compression elements exceeds λ_p, but does not exceed λ_r from Table I1.1a, the filled composite section is noncompact. If the maximum width-to-thickness ratio of any compression steel element exceeds λ_r, the section is slender. The maximum permitted width-to-thickness ratio shall be as specified in the table.

For flexure, filled composite sections are classified as compact, noncompact or slender. For a section to qualify as compact, the maximum width-to-thickness ratio of its compression steel elements shall not exceed the limiting width-to-thickness ratio, λ_p, from Table I1.1b. If the maximum width-to-thickness ratio of one or more steel compression elements exceeds λ_p, but does not exceed λ_r from Table I1.1b, the section is noncompact. If the width-to-thickness ratio of any steel element exceeds λ_r, the section is slender. The maximum permitted width-to-thickness ratio shall be as specified in the table.

Refer to Table B4.1a and Table B4.1b for definitions of width (b and D) and thickness (t) for rectangular and round *HSS* sections.

User Note: All current ASTM A500 Grade B square HSS sections are compact according to the limits of Table I1.1a and Table I1.1b except HSS7×7×1/8, HSS8×8×1/8, HSS9×9×1/8 and HSS12×12×3/16 which are noncompact for both axial compression and flexure.

All current ASTM A500 Grade B round HSS sections are compact according to the limits of Table I1.1a and Table I1.1b for both axial compression and flexure with the exception of HSS16.0×0.25, which is noncompact for flexure.

TABLE I1.1A
Limiting Width-to-Thickness Ratios for Compression Steel Elements in Composite Members Subject to Axial Compression For Use with Section I2.2

Description of Element	Width-to-Thickness Ratio	λ_p Compact/ Noncompact	λ_r Noncompact/ Slender	Maximum Permitted
Walls of Rectangular HSS and Boxes of Uniform Thickness	b/t	$2.26\sqrt{\frac{E}{F_y}}$	$3.00\sqrt{\frac{E}{F_y}}$	$5.00\sqrt{\frac{E}{F_y}}$
Round HSS	D/t	$\frac{0.15E}{F_y}$	$\frac{0.19E}{F_y}$	$\frac{0.31E}{F_y}$

TABLE I1.1B
Limiting Width-to-Thickness Ratios for Compression Steel Elements in Composite Members Subject to Flexure For Use with Section I3.4

Description of Element	Width-to-Thickness Ratio	λ_p Compact/ Noncompact	λ_r Noncompact/ Slender	Maximum Permitted
Flanges of Rectangular HSS and Boxes of Uniform Thickness	b/t	$2.26\sqrt{\frac{E}{F_y}}$	$3.00\sqrt{\frac{E}{F_y}}$	$5.00\sqrt{\frac{E}{F_y}}$
Webs of Rectangular HSS and Boxes of Uniform Thickness	h/t	$3.00\sqrt{\frac{E}{F_y}}$	$5.70\sqrt{\frac{E}{F_y}}$	$5.70\sqrt{\frac{E}{F_y}}$
Round HSS	D/t	$\frac{0.09E}{F_y}$	$\frac{0.31E}{F_y}$	$\frac{0.31E}{F_y}$

I2. AXIAL FORCE

This section applies to two types of *composite* members subject to axial force: *encased composite members* and *filled composite members.*

1. Encased Composite Members

1a. Limitations

For *encased composite members*, the following limitations shall be met:

(1) The cross-sectional area of the steel core shall comprise at least 1% of the total composite cross section.

(2) Concrete encasement of the steel core shall be reinforced with continuous longitudinal bars and lateral ties or spirals.

Where lateral ties are used, a minimum of either a No. 3 (10 mm) bar spaced at a maximum of 12 in. (305 mm) on center, or a No. 4 (13 mm) bar or larger spaced at a maximum of 16 in. (406 mm) on center shall be used. Deformed wire or welded wire reinforcement of equivalent area are permitted.

Maximum spacing of lateral ties shall not exceed 0.5 times the least *column* dimension.

(3) The minimum reinforcement ratio for continuous longitudinal reinforcing, ρ_{sr}, shall be 0.004, where ρ_{sr} is given by:

$$\rho_{sr} = \frac{A_{sr}}{A_g} \tag{I2-1}$$

where

A_g = gross area of composite member, in.^{2} (mm^2)

A_{sr} = area of continuous reinforcing bars, in.^{2} (mm^2)

User Note: Refer to Sections 7.10 and 10.9.3 of ACI 318 for additional tie and spiral reinforcing provisions.

1b. Compressive Strength

The *design compressive strength,* $\phi_c P_n$, and *allowable compressive strength,* P_n/Ω_c, of doubly symmetric axially loaded *encased composite members* shall be determined for the *limit state* of *flexural buckling* based on member slenderness as follows:

$$\phi_c = 0.75 \text{ (LRFD)} \qquad \Omega_c = 2.00 \text{ (ASD)}$$

(a) When $\dfrac{P_{no}}{P_e} \le 2.25$

$$P_n = P_{no}\left[0.658^{\frac{P_{no}}{P_e}}\right] \tag{I2-2}$$

(b) When $\dfrac{P_{no}}{P_e} > 2.25$

$$P_n = 0.877P_e \tag{I2-3}$$

where

P_{no} = $F_yA_s + F_{ysr}A_{sr} + 0.85f'_cA_c$ (I2-4)

P_e = elastic critical *buckling load* determined in accordance with Chapter C or Appendix 7, kips (N)

= $\pi^2(EI_{eff})/(KL)^2$ (I2-5)

A_c = area of concrete, in.^{2} (mm^2)

A_s = area of the steel section, in.^{2} (mm^2)

E_c = modulus of elasticity of concrete

= $w_c^{1.5}\sqrt{f'_c}$, ksi $\left(0.043w_c^{1.5}\sqrt{f'_c},\ \text{MPa}\right)$

EI_{eff} = effective *stiffness* of composite section, kip-in.^{2} (N-mm^2)

= $E_sI_s + 0.5E_sI_{sr} + C_1E_cI_c$ (I2-6)

C_1 = coefficient for calculation of effective rigidity of an encased composite compression member

$$= 0.1 + 2\left(\frac{A_s}{A_c + A_s}\right) \le 0.3 \tag{I2-7}$$

E_s = modulus of elasticity of steel

= 29,000 ksi (200 000 MPa)

F_y = *specified minimum yield stress* of steel section, ksi (MPa)

F_{ysr} = specified minimum yield stress of reinforcing bars, ksi (MPa)

I_c = moment of inertia of the concrete section about the elastic neutral axis of the composite section, in.^{4} (mm^4)

I_s = moment of inertia of steel shape about the elastic neutral axis of the composite section, in.^{4} (mm^4)

I_{sr} = moment of inertia of reinforcing bars about the elastic neutral axis of the composite section, in.^{4} (mm^4)

K = *effective length factor*

L = laterally *unbraced length* of the member, in. (mm)

f'_c = specified compressive strength of concrete, ksi (MPa)

w_c = weight of concrete per unit volume ($90 \le w_c \le 155$ lbs/ft^3 or $1500 \le w_c \le 2500$ kg/m^3)

The *available compressive strength* need not be less than that specified for the bare steel member as required by Chapter E.

1c. Tensile Strength

The *available tensile strength* of axially loaded *encased composite members* shall be determined for the limit state of *yielding* as follows:

$$P_n = F_yA_s + F_{ysr}A_{sr} \tag{I2-8}$$

$$\phi_t = 0.90 \text{ (LRFD)} \qquad \Omega_t = 1.67 \text{ (ASD)}$$

1d. Load Transfer

Load transfer requirements for *encased composite members* shall be determined in accordance with Section I6.

1e. Detailing Requirements

Clear spacing between the steel core and longitudinal reinforcing shall be a minimum of 1.5 reinforcing bar diameters, but not less than 1.5 in. (38 mm).

If the composite cross section is built up from two or more encased steel shapes, the shapes shall be interconnected with *lacing*, *tie plates*, *batten plates* or similar components to prevent *buckling* of individual shapes due to *loads* applied prior to hardening of the concrete.

2. Filled Composite Members

2a. Limitations

For *filled composite members*, the cross-sectional area of the steel section shall comprise at least 1% of the total composite cross section.

Filled composite members shall be classified for *local buckling* according to Section I1.4.

2b. Compressive Strength

The *available compressive strength* of axially loaded doubly symmetric *filled composite members* shall be determined for the limit state of *flexural buckling* in accordance with Section I2.1b with the following modifications:

(a) For *compact sections*

$$P_{no} = P_p \tag{I2-9a}$$

where

$$P_p = F_y A_s + C_2 f_c' \left(A_c + A_{sr} \frac{E_s}{E_c} \right) \tag{I2-9b}$$

$C_2 = 0.85$ for rectangular sections and 0.95 for round sections

(b) For *noncompact sections*

$$P_{no} = P_p - \frac{P_p - P_y}{\left(\lambda_r - \lambda_p\right)^2} \left(\lambda - \lambda_p\right)^2 \tag{I2-9c}$$

where

λ, λ_p and λ_r are slenderness ratios determined from Table I1.1a

P_p is determined from Equation I2-9b

$$P_y = F_y A_s + 0.7 f_c' \left(A_c + A_{sr} \frac{E_s}{E_c} \right) \tag{I2-9d}$$

(c) For slender sections

$$P_{no} = F_{cr} A_s + 0.7 f_c' \left(A_c + A_{sr} \frac{E_s}{E_c} \right) \tag{I2-9e}$$

where

(i) For rectangular filled sections

$$F_{cr} = \frac{9E_s}{\left(\frac{b}{t}\right)^2} \tag{I2-10}$$

(ii) For round filled sections

$$F_{cr} = \frac{0.72F_y}{\left(\left(\frac{D}{t}\right)\frac{F_y}{E_s}\right)^{0.2}} \tag{I2-11}$$

The effective stiffness of the composite section, EI_{eff}, for all sections shall be:

$$EI_{eff} = E_sI_s + E_sI_{sr} + C_3E_cI_c \tag{I2-12}$$

where

C_3 = coefficient for calculation of effective rigidity of filled composite compression member

$$= 0.6 + 2\left[\frac{A_s}{A_c + A_s}\right] \leq 0.9 \tag{I2-13}$$

The available compressive *strength* need not be less than specified for the bare steel member as required by Chapter E.

2c. Tensile Strength

The *available tensile strength* of axially loaded *filled composite members* shall be determined for the limit state of *yielding* as follows:

$$P_n = A_sF_y + A_{sr}F_{ysr} \tag{I2-14}$$

$$\phi_t = 0.90 \text{ (LRFD)} \qquad \Omega_t = 1.67 \text{ (ASD)}$$

2d. Load Transfer

Load transfer requirements for *filled composite members* shall be determined in accordance with Section I6.

I3. FLEXURE

This section applies to three types of *composite* members subject to flexure: *composite beams* with *steel anchors* consisting of steel headed stud anchors or steel channel anchors, *encased composite members*, and *filled composite members*.

1. General

1a. Effective Width

The *effective width* of the concrete slab shall be the sum of the effective widths for each side of the *beam* centerline, each of which shall not exceed:

(1) one-eighth of the beam span, center-to-center of supports;
(2) one-half the distance to the centerline of the adjacent beam; or
(3) the distance to the edge of the slab.

1b. Strength During Construction

When temporary shores are not used during construction, the steel section alone shall have adequate strength to support all *loads* applied prior to the concrete attaining 75% of its specified strength f_c'. The *available flexural strength* of the steel section shall be determined in accordance with Chapter F.

2. Composite Beams With Steel Headed Stud or Steel Channel Anchors

2a. Positive Flexural Strength

The *design positive flexural strength,* $\phi_b M_n$, and *allowable positive flexural strength,* M_n/Ω_b, shall be determined for the *limit state* of *yielding* as follows:

$$\phi_b = 0.90 \text{ (LRFD)} \qquad \Omega_b = 1.67 \text{ (ASD)}$$

(a) When $h/t_w \leq 3.76\sqrt{E/F_y}$

M_n shall be determined from the plastic *stress* distribution on the composite section for the limit state of *yielding (plastic moment)*.

User Note: All current ASTM A6 W, S and HP shapes satisfy the limit given in Section I3.2a(a) for $F_y \leq 50$ ksi (345 MPa).

(b) When $h/t_w > 3.76\sqrt{E/F_y}$

M_n shall be determined from the superposition of elastic stresses, considering the effects of shoring, for the limit state of *yielding (yield moment)*.

2b. Negative Flexural Strength

The *available negative flexural strength* shall be determined for the steel section alone, in accordance with the requirements of Chapter F.

Alternatively, the available negative flexural strength shall be determined from the plastic stress distribution on the composite section, for the *limit state* of *yielding (plastic moment),* with

$$\phi_b = 0.90 \text{ (LRFD)} \qquad \Omega_b = 1.67 \text{ (ASD)}$$

provided that the following limitations are met:

(1) The steel *beam* is *compact* and is adequately braced in accordance with Chapter F.
(2) Steel headed stud or steel channel anchors connect the slab to the steel beam in the negative moment region.
(3) The slab reinforcement parallel to the steel beam, within the *effective width* of the slab, is *properly developed*.

2c. Composite Beams With Formed Steel Deck

(1) General

The available flexural strength of composite construction consisting of concrete slabs on *formed steel deck* connected to steel *beams* shall be determined by the applicable portions of Sections I3.2a and I3.2b, with the following requirements:

(1) The *nominal rib height* shall not be greater than 3 in. (75 mm). The average width of concrete rib or haunch, w_r, shall be not less than 2 in. (50 mm), but shall not be taken in calculations as more than the minimum clear width near the top of the steel deck.

(2) The concrete slab shall be connected to the steel beam with welded steel headed stud anchors, $^3/_4$ in. (19 mm) or less in diameter (AWS D1.1/D1.1M). Steel headed stud anchors shall be welded either through the deck or directly to the steel cross section. Steel headed stud anchors, after installation, shall extend not less than $1^1/_2$ in. (38 mm) above the top of the steel deck and there shall be at least $^1/_2$ in. (13 mm) of specified concrete cover above the top of the steel headed stud anchors.

(3) The slab thickness above the steel deck shall be not less than 2 in. (50 mm).

(4) Steel deck shall be anchored to all supporting members at a spacing not to exceed 18 in. (460 mm). Such anchorage shall be provided by steel headed stud anchors, a combination of steel headed stud anchors and arc spot (puddle) welds, or other devices specified by the contract documents.

(2) Deck Ribs Oriented Perpendicular to Steel Beam

Concrete below the top of the steel deck shall be neglected in determining composite section properties and in calculating A_c for deck ribs oriented perpendicular to the steel beams.

(3) Deck Ribs Oriented Parallel to Steel Beam

Concrete below the top of the steel deck is permitted to be included in determining composite section properties and shall be included in calculating A_c.

Formed steel deck ribs over supporting beams are permitted to be split longitudinally and separated to form a *concrete haunch*.

When the nominal depth of steel deck is $1^1/_2$ in. (38 mm) or greater, the average width, w_r, of the supported haunch or rib shall be not less than 2 in. (50 mm) for the first steel headed stud anchor in the transverse row plus four stud diameters for each additional steel headed stud anchor.

2d. Load Transfer Between Steel Beam and Concrete Slab

(1) Load Transfer for Positive Flexural Strength

The entire *horizontal shear* at the interface between the steel *beam* and the concrete slab shall be assumed to be transferred by steel headed stud or steel channel anchors, except for *concrete-encased beams* as defined in Section I3.3. For composite action with concrete subject to flexural compression, the nominal shear force between the steel beam and the concrete slab transferred by *steel anchors*, V', between the point of maximum positive moment and the point of zero moment shall be determined as the lowest value in accordance with the *limit*

states of *concrete crushing, tensile yielding* of the steel section, or the shear strength of the steel anchors:

(a) Concrete crushing

$$V' = 0.85 f_c' A_c \tag{I3-1a}$$

(b) Tensile yielding of the steel section

$$V' = F_y A_s \tag{I3-1b}$$

(c) Shear strength of steel headed stud or steel channel anchors

$$V' = \Sigma Q_n \tag{I3-1c}$$

where

A_c = area of concrete slab within *effective width*, in.^{2} (mm^2)
A_s = area of steel cross section, in.^{2} (mm^2)
ΣQ_n = sum of *nominal shear strengths* of steel headed stud or steel channel anchors between the point of maximum positive moment and the point of zero moment, kips (N)

(2) Load Transfer for Negative Flexural Strength

In continuous composite beams where longitudinal reinforcing steel in the negative moment regions is considered to act compositely with the steel beam, the total horizontal shear between the point of maximum negative moment and the point of zero moment shall be determined as the lower value in accordance with the following limit states:

(a) For the limit state of tensile yielding of the slab reinforcement

$$V' = F_{ysr} A_{sr} \tag{I3-2a}$$

where

A_{sr} = area of adequately developed longitudinal reinforcing steel within the effective width of the concrete slab, in.^{2} (mm^2)
F_{ysr} = *specified minimum yield stress* of the reinforcing steel, ksi (MPa)

(b) For the limit state of shear strength of steel headed stud or steel channel anchors

$$V' = \Sigma Q_n \tag{I3-2b}$$

3. Encased Composite Members

The *available flexural strength* of concrete-encased members shall be determined as follows:

$$\phi_b = 0.90 \text{ (LRFD)} \qquad \Omega_b = 1.67 \text{ (ASD)}$$

The nominal flexural strength, M_n, shall be determined using one of the following methods:

(a) The superposition of elastic *stresses* on the composite section, considering the effects of shoring for the *limit state* of yielding (*yield moment*).

(b) The plastic stress distribution on the steel section alone, for the limit state of *yielding (plastic moment)* on the steel section.

(c) The plastic stress distribution on the composite section or the strain-compatibility method, for the limit state of yielding (plastic moment) on the composite section. For concrete-encased members, *steel anchors* shall be provided.

4. Filled Composite Members

4a. Limitations

Filled composite sections shall be classified for *local buckling* according to Section I1.4.

4b. Flexural Strength

The *available flexural strength* of *filled composite members* shall be determined as follows:

$$\phi_b = 0.90 \text{ (LRFD)} \qquad \Omega_b = 1.67 \text{ (ASD)}$$

The nominal flexural strength, M_n, shall be determined as follows:

(a) For *compact sections*

$$M_n = M_p \tag{I3-3a}$$

where

M_p = moment corresponding to plastic *stress* distribution over the composite cross section, kip-in. (N-mm)

(b) For *noncompact sections*

$$M_n = M_p - \left(M_p - M_y\right)\left(\frac{\lambda - \lambda_p}{\lambda_r - \lambda_p}\right) \tag{I3-3b}$$

where

λ, λ_p and λ_r are slenderness ratios determined from Table I1.1b.

M_y = *yield moment* corresponding to yielding of the tension flange and first yield of the compression flange, kip-in. (N-mm). The capacity at first yield shall be calculated assuming a linear elastic stress distribution with the maximum concrete compressive stress limited to $0.7f'_c$ and the maximum steel stress limited to F_y.

(c) For slender sections, M_n, shall be determined as the first yield moment. The compression flange stress shall be limited to the *local buckling* stress, F_{cr}, determined using Equation I2-10 or I2-11. The concrete stress distribution shall be linear elastic with the maximum compressive stress limited to $0.70f'_c$.

I4. SHEAR

1. Filled and Encased Composite Members

The *design shear strength,* $\phi_v V_n$, and *allowable shear strength,* V_n/Ω_v, shall be determined based on one of the following:

(a) The *available shear strength* of the steel section alone as specified in Chapter G
(b) The available shear strength of the reinforced concrete portion (concrete plus steel reinforcement) alone as defined by ACI 318 with

$$\phi_v = 0.75 \text{ (LRFD)} \qquad \Omega_v = 2.00 \text{ (ASD)}$$

(c) The *nominal shear strength* of the steel section as defined in Chapter G plus the nominal strength of the reinforcing steel as defined by ACI 318 with a combined resistance or *safety factor* of

$$\phi_v = 0.75 \text{ (LRFD)} \qquad \Omega_v = 2.00 \text{ (ASD)}$$

2. Composite Beams With Formed Steel Deck

The available shear strength of *composite beams* with steel headed stud or steel channel anchors shall be determined based upon the properties of the steel section alone in accordance with Chapter G.

I5. COMBINED FLEXURE AND AXIAL FORCE

The interaction between flexure and axial forces in composite members shall account for *stability* as required by Chapter C. The *available compressive strength* and the *available flexural strength* shall be determined as defined in Sections I2 and I3, respectively. To account for the influence of *length effects* on the axial strength of the member, the nominal axial strength of the member shall be determined in accordance with Section I2.

For *encased composite members* and for *filled composite members* with *compact sections*, the interaction between axial force and flexure shall be based on the interaction equations of Section H1.1 or one of the methods as defined in Section I1.2.

For filled composite members with noncompact or slender sections, the interaction between axial forces and flexure shall be based on the interaction equations of Section H1.1.

User Note: Methods for determining the capacity of composite *beam-columns* are discussed in the Commentary.

I6. LOAD TRANSFER

1. General Requirements

When external forces are applied to an axially loaded encased or *filled composite member*, the introduction of force to the member and the transfer of longitudinal

shears within the member shall be assessed in accordance with the requirements for force allocation presented in this section.

The *design strength*, ϕR_n, or the *allowable strength*, R_n/Ω, of the applicable force transfer mechanisms as determined in accordance with Section I6.3 shall equal or exceed the required longitudinal shear force to be transferred, V_r', as determined in accordance with Section I6.2.

2. Force Allocation

Force allocation shall be determined based upon the distribution of external force in accordance with the following requirements:

User Note: *Bearing* strength provisions for externally applied forces are provided in Section J8. For *filled composite members*, the term $\sqrt{A_2/A_1}$ in Equation J8-2 may be taken equal to 2.0 due to confinement effects.

2a. External Force Applied to Steel Section

When the entire external *force* is applied directly to the steel section, the force required to be transferred to the concrete, V_r', shall be determined as follows:

$$V_r' = P_r\,(1 - F_y A_s/P_{no}) \tag{I6-1}$$

where

P_{no} = nominal axial compressive strength without consideration of *length effects*, determined by Equation I2-4 for *encased composite members*, and Equation I2-9a for *filled composite members*, kips (N)

P_r = required external force applied to the composite member, kips (N)

2b. External Force Applied to Concrete

When the entire external force is applied directly to the concrete encasement or concrete fill, the force required to be transferred to the steel, V_r', shall be determined as follows:

$$V_r' = P_r\,(F_y A_s/P_{no}) \tag{I6-2}$$

where

P_{no} = nominal axial compressive strength without consideration of *length effects*, determined by Equation I2-4 for *encased composite members*, and Equation I2-9a for *filled composite members*, kips (N)

P_r = required external force applied to the composite member, kips (N)

2c. External Force Applied Concurrently to Steel and Concrete

When the external force is applied concurrently to the steel section and concrete encasement or concrete fill, V_r' shall be determined as the force required to establish equilibrium of the cross section.

User Note: The Commentary provides an acceptable method of determining the longitudinal shear force required for equilibrium of the cross section.

3. Force Transfer Mechanisms

The *nominal strength*, R_n, of the force transfer mechanisms of *direct bond interaction*, shear connection, and direct *bearing* shall be determined in accordance with this section. Use of the force transfer *mechanism* providing the largest nominal strength is permitted. Force transfer mechanisms shall not be superimposed.

The force transfer mechanism of direct bond interaction shall not be used for *encased composite members*.

3a. Direct Bearing

Where force is transferred in an encased or *filled composite member* by direct *bearing* from internal bearing mechanisms, the *available bearing strength* of the concrete for the *limit state* of *concrete crushing* shall be determined as follows:

$$R_n = 1.7 f_c' A_1 \tag{I6-3}$$

$$\phi_B = 0.65 \text{ (LRFD)} \qquad \Omega_B = 2.31 \text{ (ASD)}$$

where

A_1 = loaded area of concrete, in.^{2} (mm^2)

User Note: An example of force transfer via an internal bearing mechanism is the use of internal steel plates within a filled composite member.

3b. Shear Connection

Where force is transferred in an encased or *filled composite member* by shear connection, the *available shear strength* of steel headed stud or steel channel anchors shall be determined as follows:

$$R_c = \Sigma Q_{cv} \tag{I6-4}$$

where

ΣQ_{cv} = sum of *available shear strengths*, ϕQ_{nv} or Q_{nv}/Ω as appropriate, of steel headed stud or steel channel anchors, determined in accordance with Section I8.3a or Section I8.3d, respectively, placed within the *load introduction length* as defined in Section I6.4, kips (N)

3c. Direct Bond Interaction

Where force is transferred in a *filled composite member* by *direct bond interaction*, the *available bond strength* between the steel and concrete shall be determined as follows:

$$\phi = 0.45 \text{ (LRFD)} \qquad \Omega = 3.33 \text{ (ASD)}$$

(a) For rectangular steel sections filled with concrete:

$$R_n = B^2 C_{in} F_{in} \quad \text{(I6-5)}$$

(b) For round steel sections filled with concrete:

$$R_n = 0.25\pi D^2 C_{in} F_{in} \quad \text{(I6-6)}$$

where

C_{in} = 2 if the filled composite member extends to one side of the point of force transfer
= 4 if the filled composite member extends on both sides of the point of force transfer
R_n = nominal bond strength, kips (N)
F_{in} = nominal bond *stress*= 0.06 ksi (0.40 MPa)
B = overall width of rectangular steel section along face transferring *load*, in. (mm)
D = outside diameter of round *HSS*, in. (mm)

4. Detailing Requirements

4a. Encased Composite Members

Steel anchors utilized to transfer longitudinal shear shall be distributed within the *load introduction length*, which shall not exceed a distance of two times the minimum transverse dimension of the *encased composite member* above and below the *load* transfer region. Anchors utilized to transfer longitudinal shear shall be placed on at least two faces of the steel shape in a generally symmetric configuration about the steel shape axes.

Steel anchor spacing, both within and outside of the load introduction length, shall conform to Section I8.3e.

4b. Filled Composite Members

Where required, steel anchors transferring the required longitudinal shear force shall be distributed within the *load introduction length*, which shall not exceed a distance of two times the minimum transverse dimension of a rectangular steel member or two times the diameter of a round steel member both above and below the *load* transfer region. Steel anchor spacing within the load introduction length shall conform to Section I8.3e.

I7. COMPOSITE DIAPHRAGMS AND COLLECTOR BEAMS

Composite slab diaphragms and *collector beams* shall be designed and detailed to transfer *loads* between the diaphragm, the diaphragm's boundary members and collector elements, and elements of the lateral force resisting system.

User Note: Design guidelines for composite diaphragms and collector beams can be found in the Commentary.

I8. STEEL ANCHORS

1. General

The diameter of a steel headed stud anchor shall not be greater than 2.5 times the thickness of the base metal to which it is welded, unless it is welded to a flange directly over a web.

Section I8.2 applies to a *composite* flexural member where *steel anchors* are embedded in a solid concrete slab or in a slab cast on *formed steel* deck. Section I8.3 applies to all other cases.

2. Steel Anchors in Composite Beams

The length of steel headed stud anchors shall not be less than four stud diameters from the base of the steel headed stud anchor to the top of the stud head after installation.

2a. Strength of Steel Headed Stud Anchors

The *nominal shear strength* of one steel headed stud anchor embedded in a solid concrete slab or in a composite slab with decking shall be determined as follows:

$$Q_n = 0.5 A_{sa} \sqrt{f_c' E_c} \le R_g R_p A_{sa} F_u \qquad \text{(I8-1)}$$

where

A_{sa} = cross-sectional area of steel headed stud anchor, in.^{2} (mm^2)

E_c = modulus of elasticity of concrete

$= w_c^{1.5} \sqrt{f_c'}$, ksi $\left(0.043 w_c^{1.5} \sqrt{f_c'}, \text{ MPa}\right)$

F_u = *specified minimum tensile strength* of a steel headed stud anchor, ksi (MPa)

R_g = 1.0 for:

(a) one steel headed stud anchor welded in a steel deck rib with the deck oriented perpendicular to the steel shape;

(b) any number of steel headed stud anchors welded in a row directly to the steel shape;

(c) any number of steel headed stud anchors welded in a row through steel deck with the deck oriented parallel to the steel shape and the ratio of the *average rib width* to rib depth ≥ 1.5

= 0.85 for:

(a) two steel headed stud anchors welded in a steel deck rib with the deck oriented perpendicular to the steel shape;

(b) one steel headed stud anchor welded through steel deck with the deck oriented parallel to the steel shape and the ratio of the average rib width to rib depth < 1.5

= 0.7 for three or more steel headed stud anchors welded in a steel deck rib with the deck oriented perpendicular to the steel shape

R_p = 0.75 for:
(a) steel headed stud anchors welded directly to the steel shape;
(b) steel headed stud anchors welded in a composite slab with the deck oriented perpendicular to the *beam* and $e_{mid\text{-}ht} \geq 2$ in. (50 mm);
(c) steel headed stud anchors welded through steel deck, or steel sheet used as *girder filler* material, and embedded in a composite slab with the deck oriented parallel to the beam
= 0.6 for steel headed stud anchors welded in a composite slab with deck oriented perpendicular to the beam and $e_{mid\text{-}ht} < 2$ in. (50 mm)

$e_{mid\text{-}ht}$ = distance from the edge of steel headed stud anchor shank to the steel deck web, measured at mid-height of the deck rib, and in the *load bearing* direction of the steel headed stud anchor (in other words, in the direction of maximum moment for a simply supported beam), in. (mm)

User Note: The table below presents values for R_g and R_p for several cases. Capacities for steel headed stud anchors can be found in the Manual.

Condition	R_g	R_p
No decking	1.0	0.75
Decking oriented parallel to the steel shape		
$\frac{w_r}{h_r} \geq 1.5$	1.0	0.75
$\frac{w_r}{h_r} < 1.5$	0.85**	0.75
Decking oriented perpendicular to the steel shape		
Number of steel headed stud anchors occupying the same decking rib		
1	1.0	0.6+
2	0.85	0.6+
3 or more	0.7	0.6+

h_r = nominal rib height, in. (mm)
w_r = average width of concrete rib or haunch (as defined in Section I3.2c), in. (mm)
** for a single steel headed stud anchor
+ this value may be increased to 0.75 when $e_{mid\text{-}ht} \geq 2$ in. (51 mm)

2b. Strength of Steel Channel Anchors

The nominal shear strength of one hot-rolled channel anchor embedded in a solid concrete slab shall be determined as follows:

$$Q_n = 0.3(t_f + 0.5t_w)l_a\sqrt{f'_c E_c} \quad \text{(I8-2)}$$

where

l_a = length of channel anchor, in. (mm)
t_f = thickness of flange of channel anchor, in. (mm)
t_w = thickness of channel anchor web, in. (mm)

The strength of the channel anchor shall be developed by welding the channel to the *beam* flange for a force equal to Q_n, considering eccentricity on the anchor.

2c. Required Number of Steel Anchors

The number of anchors required between the section of maximum bending moment, positive or negative, and the adjacent section of zero moment shall be equal to the *horizontal shear* as determined in Sections I3.2d(1) and I3.2d(2) divided by the nominal shear strength of one *steel anchor* as determined from Section I8.2a or Section I8.2b. The number of steel anchors required between any concentrated *load* and the nearest point of zero moment shall be sufficient to develop the maximum moment required at the concentrated load point.

2d. Detailing Requirements

Steel anchors required on each side of the point of maximum bending moment, positive or negative, shall be distributed uniformly between that point and the adjacent points of zero moment, unless specified otherwise on the contract documents.

Steel anchors shall have at least 1 in. (25 mm) of lateral concrete cover in the direction perpendicular to the shear force, except for anchors installed in the ribs of formed steel decks. The minimum distance from the center of an anchor to a free edge in the direction of the shear force shall be 8 in. (203 mm) if normal weight concrete is used and 10 in. (250 mm) if *lightweight concrete* is used. The provisions of ACI 318, Appendix D are permitted to be used in lieu of these values.

The minimum center-to-center spacing of steel headed stud anchors shall be six diameters along the longitudinal axis of the supporting composite *beam* and four diameters transverse to the longitudinal axis of the supporting composite beam, except that within the ribs of formed steel decks oriented perpendicular to the steel beam the minimum center-to-center spacing shall be four diameters in any direction. The maximum center-to-center spacing of steel anchors shall not exceed eight times the total slab thickness or 36 in. (900 mm).

3. Steel Anchors in Composite Components

This section shall apply to the design of cast-in-place steel headed stud anchors and steel channel anchors in *composite components*.

The provisions of the *applicable building code* or ACI 318, Appendix D may be used in lieu of the provisions in this section.

User Note: The steel headed stud anchor strength provisions in this section are applicable to anchors located primarily in the *load* transfer (connection) region of composite *columns* and *beam-columns*, concrete-encased and filled composite beams, composite coupling *beams*, and composite walls, where the steel and concrete are working compositely within a member. They are not intended for hybrid construction where the steel and concrete are not working compositely, such as with embed plates.

Section I8.2 specifies the strength of *steel anchors* embedded in a solid concrete slab or in a concrete slab with formed steel deck in a composite beam.

Limit states for the steel shank of the anchor and for concrete breakout in shear are covered directly in this Section. Additionally, the spacing and dimensional limitations provided in these provisions preclude the limit states of concrete pry-out for anchors loaded in shear and concrete breakout for anchors loaded in tension as defined by ACI 318, Appendix D.

For normal weight concrete: Steel headed stud anchors subjected to shear only shall not be less than five stud diameters in length from the base of the steel headed stud to the top of the stud head after installation. Steel headed stud anchors subjected to tension or interaction of shear and tension shall not be less than eight stud diameters in length from the base of the stud to the top of the stud head after installation.

For *lightweight concrete*: Steel headed stud anchors subjected to shear only shall not be less than seven stud diameters in length from the base of the steel headed stud to the top of the stud head after installation. Steel headed stud anchors subjected to tension shall not be less than ten stud diameters in length from the base of the stud to the top of the stud head after installation. The *nominal strength* of steel headed stud anchors subjected to interaction of shear and tension for lightweight concrete shall be determined as stipulated by the applicable building code or ACI 318 Appendix D.

Steel headed stud anchors subjected to tension or interaction of shear and tension shall have a diameter of the head greater than or equal to 1.6 times the diameter of the shank.

User Note: The following table presents values of minimum steel headed stud anchor *h/d* ratios for each condition covered in the Specification:

Loading Condition	Normal Weight Concrete	Lightweight Concrete
Shear	$h/d \geq 5$	$h/d \geq 7$
Tension	$h/d \geq 8$	$h/d \geq 10$
Shear and Tension	$h/d \geq 8$	N/A*

h/d = ratio of steel headed stud anchor shank length to the top of the stud head, to shank diameter

* Refer to ACI 318, Appendix D for the calculation of interaction effects of anchors embedded in lightweight concrete.

3a. Shear Strength of Steel Headed Stud Anchors in Composite Components

Where concrete breakout strength in shear is not an applicable *limit state*, the *design shear strength,* $\phi_v Q_{nv}$, and *allowable shear strength,* Q_{nv}/Ω_v, of one steel headed stud anchor shall be determined as follows:

$$Q_{nv} = F_u A_{sa} \tag{I8-3}$$

$$\phi_v = 0.65 \text{ (LRFD)} \qquad \Omega_v = 2.31 \text{ (ASD)}$$

where

Q_{nv} = nominal shear strength of steel headed stud anchor, kips (N)

A_{sa} = cross-sectional area of steel headed stud anchor, in.^{2} (mm^2)

F_u = *specified minimum tensile strength* of a steel headed stud anchor, ksi (MPa)

Where concrete breakout strength in shear is an applicable limit state, the *available shear strength* of one steel headed stud anchor shall be determined by one of the following:

(1) Where anchor reinforcement is developed in accordance with Chapter 12 of ACI 318 on both sides of the *concrete breakout surface* for the steel headed stud anchor, the minimum of the steel nominal shear strength from Equation I8-3 and the *nominal strength* of the anchor reinforcement shall be used for the nominal shear strength, Q_{nv}, of the steel headed stud anchor.

(2) As stipulated by the *applicable building code* or ACI 318, Appendix D.

User Note: If concrete breakout strength in shear is an applicable limit state (for example, where the breakout prism is not restrained by an adjacent steel plate, flange or web), appropriate anchor reinforcement is required for the provisions of this Section to be used. Alternatively, the provisions of the applicable building code or ACI 318, Appendix D may be used.

3b. Tensile Strength of Steel Headed Stud Anchors in Composite Components

Where the distance from the center of an anchor to a free edge of concrete in the direction perpendicular to the height of the steel headed stud anchor is greater than or equal to 1.5 times the height of the steel headed stud anchor measured to the top of the stud head, and where the center-to-center spacing of steel headed stud anchors is greater than or equal to three times the height of the steel headed stud anchor measured to the top of the stud head, the *available tensile strength* of one steel headed stud anchor shall be determined as follows:

$$Q_{nt} = F_u A_{sa} \tag{I8-4}$$

$$\phi_t = 0.75 \text{ (LRFD)} \qquad \Omega_t = 2.00 \text{ (ASD)}$$

where

Q_{nt} = *nominal tensile strength* of steel headed stud anchor, kips (N)

Where the distance from the center of an anchor to a free edge of concrete in the direction perpendicular to the height of the steel headed stud anchor is less than 1.5 times the height of the steel headed stud anchor measured to the top of the stud head, or where the center-to-center spacing of steel headed stud anchors is less than three times the height of the steel headed stud anchor measured to the top of the stud head, the nominal tensile strength of one steel headed stud anchor shall be determined by one of the following:

(a) Where anchor reinforcement is developed in accordance with Chapter 12 of ACI 318 on both sides of the *concrete breakout surface* for the steel headed stud anchor, the minimum of the steel nominal tensile strength from Equation I8-4 and the *nominal strength* of the anchor reinforcement shall be used for the nominal tensile strength, Q_{nt}, of the steel headed stud anchor.
(b) As stipulated by the *applicable building code* or ACI 318, Appendix D.

User Note: Supplemental confining reinforcement is recommended around the anchors for steel headed stud anchors subjected to tension or interaction of shear and tension to avoid edge effects or effects from closely spaced anchors. See the Commentary and ACI 318, Section D5.2.9 for guidelines.

3c. Strength of Steel Headed Stud Anchors for Interaction of Shear and Tension in Composite Components

Where concrete breakout strength in shear is not a governing *limit state*, and where the distance from the center of an anchor to a free edge of concrete in the direction

perpendicular to the height of the steel headed stud anchor is greater than or equal to 1.5 times the height of the steel headed stud anchor measured to the top of the stud head, and where the center-to-center spacing of steel headed stud anchors is greater than or equal to three times the height of the steel headed stud anchor measured to the top of the stud head, the *nominal strength* for interaction of shear and tension of one steel headed stud anchor shall be determined as follows:

$$\left[\left(\frac{Q_{rt}}{Q_{ct}}\right)^{5/3}+\left(\frac{Q_{rv}}{Q_{cv}}\right)^{5/3}\right]\leq 1.0 \qquad \text{(I8-5)}$$

where

Q_{ct} = *available tensile strength*, kips (N)
Q_{rt} = *required tensile strength*, kips (N)
Q_{cv} = *available shear strength*, kips (N)
Q_{rv} = *required shear strength*, kips (N)

For design in accordance with Section B3.3 (LRFD):

Q_{rt} = required tensile strength using *LRFD load combinations*, kips (N)
$Q_{ct} = \phi_t Q_{nt}$ = *design tensile strength*, determined in accordance with Section I8.3b, kips (N)
Q_{rv} = required shear strength using LRFD load combinations, kips (N)
$Q_{cv} = \phi_v Q_{nv}$ = *design shear strength*, determined in accordance with Section I8.3a, kips (N)
ϕ_t = *resistance factor* for tension = 0.75
ϕ_v = resistance factor for shear = 0.65

For design in accordance with Section B3.4 (ASD):

Q_{rt} = required tensile strength using *ASD load combinations*, kips (N)
$Q_{ct} = \dfrac{Q_{nt}}{\Omega_t}$ = *allowable tensile strength*, determined in accordance with Section I8.3b, kips (N)
Q_{rv} = required shear strength using ASD load combinations, kips (N)
$Q_{cv} = \dfrac{Q_{nv}}{\Omega_v}$ = *allowable shear strength*, determined in accordance with Section I8.3a, kips (N)
Ω_t = *safety factor* for tension = 2.00
Ω_v = safety factor for shear = 2.31

Where concrete breakout strength in shear is a governing limit state, or where the distance from the center of an anchor to a free edge of concrete in the direction perpendicular to the height of the steel headed stud anchor is less than 1.5 times the height of the steel headed stud anchor measured to the top of the stud head, or where the center-to-center spacing of steel headed stud anchors is less than three times the height of the steel headed stud anchor measured to the top of the stud head, the nominal strength for interaction of shear and tension of one steel headed stud anchor shall be determined by one of the following:

(a) Where anchor reinforcement is developed in accordance with Chapter 12 of ACI 318 on both sides of the *concrete breakout surface* for the steel headed stud

anchor, the minimum of the steel nominal shear strength from Equation I8-3 and the nominal strength of the anchor reinforcement shall be used for the nominal shear strength, Q_{nv}, of the steel headed stud anchor, and the minimum of the steel nominal tensile strength from Equation I8-4 and the nominal strength of the anchor reinforcement shall be used for the nominal tensile strength, Q_{nt}, of the steel headed stud anchor for use in Equation I8-5.

(b) As stipulated by the *applicable building code* or ACI 318, Appendix D.

3d. Shear Strength of Steel Channel Anchors in Composite Components

The available shear strength of steel channel anchors shall be based on the provisions of Section I8.2b with the resistance factor and safety factor as specified below.

$$\phi_v = 0.75 \text{ (LRFD)} \qquad \Omega_v = 2.00 \text{ (ASD)}$$

3e. Detailing Requirements in Composite Components

Steel anchors shall have at least 1 in. (25 mm) of lateral clear concrete cover. The minimum center-to-center spacing of steel headed stud anchors shall be four diameters in any direction. The maximum center-to-center spacing of steel headed stud anchors shall not exceed 32 times the shank diameter. The maximum center-to-center spacing of steel channel anchors shall be 24 in. (600 mm).

User Note: Detailing requirements provided in this section are absolute limits. See Sections I8.3a, I8.3b and I8.3c for additional limitations required to preclude edge and group effect considerations.

I9. SPECIAL CASES

When *composite* construction does not conform to the requirements of Section I1 through Section I8, the strength of *steel anchors* and details of construction shall be established by testing.

CHAPTER J
DESIGN OF CONNECTIONS

This chapter addresses connecting elements, connectors and the affected elements of connected members not subject to *fatigue loads*.

The chapter is organized as follows:

J1. General Provisions
J2. Welds
J3. Bolts and Threaded Parts
J4. Affected Elements of Members and Connecting Elements
J5. Fillers
J6. Splices
J7. Bearing Strength
J8. Column Bases and Bearing on Concrete
J9. Anchor Rods and Embedments
J10. Flanges and Webs with Concentrated Forces

User Note: For cases not included in this chapter, the following sections apply:
- Chapter K Design of HSS and Box Member Connections
- Appendix 3 Design for Fatigue

J1. GENERAL PROVISIONS

1. Design Basis

The *design strength*, ϕR_n, and the *allowable strength* R_n/Ω, of *connections* shall be determined in accordance with the provisions of this chapter and the provisions of Chapter B.

The *required strength* of the connections shall be determined by *structural analysis* for the specified *design loads*, consistent with the type of construction specified, or shall be a proportion of the required strength of the connected members when so specified herein.

Where the gravity axes of intersecting axially loaded members do not intersect at one point, the effects of eccentricity shall be considered.

2. Simple Connections

Simple connections of *beams*, girders and trusses shall be designed as flexible and are permitted to be proportioned for the reaction shears only, except as otherwise indicated in the design documents. Flexible beam connections shall accommodate end rotations of simple beams. Some inelastic but self-limiting deformation in the connection is permitted to accommodate the end rotation of a simple beam.

3. Moment Connections

End connections of restrained *beams*, girders and trusses shall be designed for the combined effect of forces resulting from moment and shear induced by the rigidity of the connections. Response criteria for moment connections are provided in Section B3.6b.

User Note: See Chapter C and Appendix 7 for analysis requirements to establish the *required strength* for the design of connections.

4. Compression Members With Bearing Joints

Compression members relying on *bearing* for *load* transfer shall meet the following requirements:

(1) When *columns* bear on bearing plates or are finished to bear at *splices*, there shall be sufficient connectors to hold all parts securely in place.
(2) When compression members other than columns are finished to bear, the splice material and its connectors shall be arranged to hold all parts in line and their required strength shall be the lesser of:

(i) An axial tensile force of 50% of the required compressive strength of the member; or
(ii) The moment and shear resulting from a transverse load equal to 2% of the required compressive strength of the member. The transverse load shall be applied at the location of the splice exclusive of other loads that act on the member. The member shall be taken as pinned for the determination of the shears and moments at the splice.

User Note: All compression *joint*s should also be proportioned to resist any tension developed by the *load combinations* stipulated in Section B2.

5. Splices in Heavy Sections

When tensile forces due to applied tension or flexure are to be transmitted through *splices* in heavy sections, as defined in Sections A3.1c and A3.1d, by complete-joint-penetration groove (CJP) welds, the following provisions apply: (1) material notch-toughness requirements as given in Sections A3.1c and A3.1d; (2) weld access hole details as given in Section J1.6; (3) *filler metal* requirements as given in Section J2.6; and (4) thermal cut surface preparation and inspection requirements as given in Section M2.2. The foregoing provision is not applicable to splices of elements of *built-up shapes* that are welded prior to assembling the shape.

User Note: CJP groove welded splices of heavy sections can exhibit detrimental effects of weld shrinkage. Members that are sized for compression that are also subject to tensile forces may be less susceptible to damage from shrinkage if they are spliced using partial-joint-penetration PJP groove welds on the flanges and fillet-welded web plates, or using bolts for some or all of the splice.

6. Weld Access Holes

All weld access holes required to facilitate welding operations shall be detailed to provide room for weld backing as needed. The access hole shall have a length from the toe of the weld preparation not less than $1^1/_2$ times the thickness of the material in which the hole is made, nor less than $1^1/_2$ in. (38 mm). The access hole shall have a height not less than the thickness of the material with the access hole, nor less than $^3/_4$ in. (19 mm), nor does it need to exceed 2 in. (50 mm).

For sections that are rolled or welded prior to cutting, the edge of the web shall be sloped or curved from the surface of the flange to the *reentrant* surface of the access hole. In hot-rolled shapes, and *built-up shapes* with CJP *groove welds* that join the web-to-flange, weld access holes shall be free of notches and sharp reentrant corners. No arc of the weld access hole shall have a radius less than $^3/_8$ in. (10 mm).

In built-up shapes with fillet or *partial-joint-penetration groove welds* that join the web-to-flange, weld access holes shall be free of notches and sharp reentrant corners. The access hole shall be permitted to terminate perpendicular to the flange, providing the weld is terminated at least a distance equal to the weld size away from the access hole.

For heavy sections as defined in Sections A3.1c and A3.1d, the *thermally cut* surfaces of weld access holes shall be ground to bright metal and inspected by either magnetic particle or dye penetrant methods prior to deposition of *splice* welds. If the curved transition portion of weld access holes is formed by predrilled or sawed holes, that portion of the access hole need not be ground. Weld access holes in other shapes need not be ground nor inspected by dye penetrant or magnetic particle methods.

7. Placement of Welds and Bolts

Groups of welds or bolts at the ends of any member which transmit axial force into that member shall be sized so that the center of gravity of the group coincides with the center of gravity of the member, unless provision is made for the eccentricity. The foregoing provision is not applicable to end connections of single angle, double angle and similar members.

8. Bolts in Combination With Welds

Bolts shall not be considered as sharing the *load* in combination with welds, except that shear connections with any grade of bolts permitted by Section A3.3, installed in standard holes or short slots transverse to the direction of the load, are permitted to be considered to share the load with longitudinally loaded *fillet welds*. In such connections the *available strength* of the bolts shall not be taken as greater than 50% of the available strength of bearing-type bolts in the connection.

In making welded alterations to structures, existing rivets and high-strength bolts tightened to the requirements for *slip-critical connections* are permitted to be utilized for carrying loads present at the time of alteration and the welding need only provide the additional required strength.

9. High-Strength Bolts in Combination With Rivets

In both new work and alterations, in connections designed as *slip-critical connections* in accordance with the provisions of Section J3, high-strength bolts are permitted to be considered as sharing the *load* with existing rivets.

10. Limitations on Bolted and Welded Connections

Joints with *pretensioned bolts* or welds shall be used for the following connections:

(1) *Column splices* in all multi-story structures over 125 ft (38 m) in height
(2) Connections of all *beams* and *girders* to columns and any other beams and girders on which the *bracing* of columns is dependent in structures over 125 ft (38 m) in height
(3) In all structures carrying cranes of over 5 ton (50 kN) capacity: roof truss splices and connections of trusses to columns; column splices; column bracing; knee braces; and crane supports
(4) Connections for the support of machinery and other live *loads* that produce impact or reversal of load

Snug-tightened joints or joints with ASTM A307 bolts shall be permitted except where otherwise specified.

J2. WELDS

All provisions of AWS D1.1/D1.1M apply under this Specification, with the exception that the provisions of the listed AISC Specification Sections apply under this Specification in lieu of the cited AWS provisions as follows:

(1) Section J1.6 in lieu of AWS D1.1/D1.1M, Section 5.17.1
(2) Section J2.2a in lieu of AWS D1.1/D1.1M, Section 2.4.2.10
(3) Table J2.2 in lieu of AWS D1.1/D1.1M, Table 2.1
(4) Table J2.5 in lieu of AWS D1.1/D1.1M, Table 2.3
(5) Appendix 3, Table A-3.1 in lieu of AWS D1.1/D1.1M, Table 2.5
(6) Section B3.11 and Appendix 3 in lieu of AWS D1.1/D1.1M, Section 2, Part C
(7) Section M2.2 in lieu of AWS D1.1/D1.1M, Sections 5.15.4.3 and 5.15.4.4

1. Groove Welds

1a. Effective Area

The effective area of *groove welds* shall be considered as the length of the weld times the effective throat.

The effective throat of a *complete-joint-penetration (CJP) groove weld* shall be the thickness of the thinner part joined.

The effective throat of a *partial-joint-penetration (PJP) groove weld* shall be as shown in Table J2.1.

TABLE J2.1
Effective Throat of
Partial-Joint-Penetration Groove Welds

Welding Process	Welding Position F (flat), H (horizontal), V (vertical), OH (overhead)	Groove Type (AWS D1.1/D1.1M, Figure 3.3)	Effective Throat
Shielded metal arc (SMAW)	All	J or U groove	depth of groove
Gas metal arc (GMAW) Flux cored arc (FCAW)		60° V	
Submerged arc (SAW)	F	J or U groove 60° bevel or V	
Gas metal arc (GMAW) Flux cored arc (FCAW)	F, H	45° bevel	depth of groove
Shielded metal arc (SMAW)	All	45° bevel	depth of groove minus 1/8 in. (3 mm)
Gas metal arc (GMAW) Flux cored arc (FCAW)	V, OH		

User Note: The effective throat of a partial-joint-penetration groove weld is dependent on the process used and the weld position. The *design drawings* should either indicate the effective throat required or the weld strength required, and the fabricator should detail the *joint* based on the weld process and position to be used to weld the joint.

The effective weld throat for flare groove welds when filled flush to the surface of a round bar or a 90° bend in a *formed section* or rectangular *HSS*, shall be as shown in Table J2.2, unless other effective throats are demonstrated by tests. The effective throat of flare groove welds filled less than flush shall be as shown in Table J2.2, less the greatest perpendicular dimension measured from a line flush to the base metal surface to the weld surface.

Larger effective throats than those in Table J2.2 are permitted for a given welding procedure specification (WPS), provided the fabricator can establish by qualification the consistent production of such larger effective throat. Qualification shall consist of sectioning the weld normal to its axis, at mid-length and terminal ends. Such sectioning shall be made on a number of combinations of material sizes representative of the range to be used in the fabrication.

TABLE J2.2
Effective Weld Throats of Flare Groove Welds

Welding Process	Flare Bevel Groove[a]	Flare V-Groove
GMAW and FCAW-G	$5/8\ R$	$3/4\ R$
SMAW and FCAW-S	$5/16\ R$	$5/8\ R$
SAW	$5/16\ R$	$1/2\ R$

[a] For flare bevel groove with $R < 3/8$ in. (10 mm), use only reinforcing fillet weld on filled flush joint.
General note: R = radius of joint surface (can be assumed to be $2t$ for HSS), in. (mm)

TABLE J2.3
Minimum Effective Throat of Partial-Joint-Penetration Groove Welds

Material Thickness of Thinner Part Joined, in. (mm)	Minimum Effective Throat, [a] in. (mm)
To 1/4 (6) inclusive	1/8 (3)
Over 1/4 (6) to 1/2 (13)	3/16 (5)
Over 1/2 (13) to 3/4 (19)	1/4 (6)
Over 3/4 (19) to 1 1/2 (38)	5/16 (8)
Over 1 1/2 (38) to 2 1/4 (57)	3/8 (10)
Over 2 1/4 (57) to 6 (150)	1/2 (13)
Over 6 (150)	5/8 (16)

[a] See Table J2.1.

1b. Limitations

The minimum effective throat of a *partial-joint-penetration groove weld* shall not be less than the size required to transmit calculated *forces* nor the size shown in Table J2.3. Minimum weld size is determined by the thinner of the two parts joined.

2. Fillet Welds

2a. Effective Area

The effective area of a *fillet weld* shall be the effective length multiplied by the effective throat. The effective throat of a fillet weld shall be the shortest distance from the root to the face of the diagrammatic weld. An increase in effective throat

TABLE J2.4
Minimum Size of Fillet Welds

Material Thickness of Thinner Part Joined, in. (mm)	Minimum Size of Fillet Weld, [a] in. (mm)
To 1/4 (6) inclusive	1/8 (3)
Over 1/4 (6) to 1/2 (13)	3/16 (5)
Over 1/2 (13) to 3/4 (19)	1/4 (6)
Over 3/4 (19)	5/16 (8)

[a] Leg dimension of fillet welds. Single pass welds must be used.
Note: See Section J2.2b for maximum size of fillet welds.

is permitted if consistent penetration beyond the root of the diagrammatic weld is demonstrated by tests using the production process and procedure variables.

For fillet welds in holes and slots, the effective length shall be the length of the centerline of the weld along the center of the plane through the throat. In the case of overlapping fillets, the effective area shall not exceed the nominal cross-sectional area of the hole or slot, in the plane of the *faying surface*.

2b. Limitations

The minimum size of fillet welds shall be not less than the size required to transmit calculated forces, nor the size as shown in Table J2.4. These provisions do not apply to *fillet weld reinforcements* of partial- or *complete-joint-penetration groove welds*.

The maximum size of *fillet welds* of connected parts shall be:

(a) Along edges of material less than 1/4-in. (6 mm) thick; not greater than the thickness of the material.
(b) Along edges of material 1/4 in. (6 mm) or more in thickness; not greater than the thickness of the material minus 1/16 in. (2 mm), unless the weld is especially designated on the drawings to be built out to obtain full-throat thickness. In the as-welded condition, the distance between the edge of the base metal and the toe of the weld is permitted to be less than 1/16 in. (2 mm) provided the weld size is clearly verifiable.

The minimum length of fillet welds designed on the basis of strength shall be not less than four times the nominal weld size, or else the effective size of the weld shall be considered not to exceed one quarter of its length. If longitudinal fillet welds are used alone in end connections of flat-bar tension members, the length of each fillet weld shall be not less than the perpendicular distance between them. For the effect of longitudinal fillet weld length in end connections upon the effective area of the connected member, see Section D3.

For end-loaded fillet welds with a length up to 100 times the weld size, it is permitted to take the effective length equal to the actual length. When the length of the end-loaded fillet weld exceeds 100 times the weld size, the effective length shall be determined by multiplying the actual length by the reduction factor, β, determined as follows:

$$\beta = 1.2 - 0.002(l/w) \leq 1.0 \qquad \text{(J2-1)}$$

where

l = actual length of end-loaded weld, in. (mm)
w = size of weld leg, in. (mm)

When the length of the weld exceeds 300 times the leg size, w, the effective length shall be taken as 180w.

Intermittent fillet welds are permitted to be used to transfer calculated *stress* across a *joint* or *faying surfaces* and to join components of *built-up members*. The length of any segment of intermittent fillet welding shall be not less than four times the weld size, with a minimum of $1^1/_2$ in. (38 mm).

In *lap joints*, the minimum amount of lap shall be five times the thickness of the thinner part joined, but not less than 1 in. (25 mm). Lap joints joining plates or bars subjected to axial stress that utilize transverse fillet welds only shall be fillet welded along the end of both lapped parts, except where the deflection of the lapped parts is sufficiently restrained to prevent opening of the joint under maximum loading.

Fillet weld terminations are permitted to be stopped short or extend to the ends or sides of parts or be boxed except as limited by the following:

(1) For overlapping elements of members in which one connected part extends beyond an edge of another connected part that is subject to calculated tensile stress, fillet welds shall terminate not less than the size of the weld from that edge.
(2) For *connections* where flexibility of the outstanding elements is required, when *end returns* are used the length of the return shall not exceed four times the nominal size of the weld nor half the width of the part.
(3) Fillet welds joining *transverse stiffeners* to *plate girder* webs $^3/_4$-in. (19 mm) thick or less shall end not less than four times nor more than six times the thickness of the web from the web toe of the web-to-flange welds, except where the ends of *stiffeners* are welded to the flange.
(4) Fillet welds that occur on opposite sides of a common plane shall be interrupted at the corner common to both welds.

User Note: Fillet weld terminations should be located approximately one weld size from the edge of the connection to minimize notches in the base metal. Fillet welds terminated at the end of the joint, other than those connecting stiffeners to girder webs, are not a cause for correction.

Fillet welds in holes or slots are permitted to be used to transmit shear and resist *loads* perpendicular to the faying surface in lap joints or to prevent the *buckling* or

separation of lapped parts and to join components of built-up members. Such fillet welds may overlap, subject to the provisions of Section J2. Fillet welds in holes or slots are not to be considered plug or *slot welds*.

3. Plug and Slot Welds

3a. Effective Area

The effective shearing area of *plug* and *slot welds* shall be considered as the nominal cross-sectional area of the hole or slot in the plane of the *faying surface*.

3b. Limitations

Plug or slot welds are permitted to be used to transmit shear in *lap joints* or to prevent *buckling* or separation of lapped parts and to join component parts of *built-up members*.

The diameter of the holes for a *plug weld* shall not be less than the thickness of the part containing it plus $^5/_{16}$ in. (8 mm), rounded to the next larger odd $^1/_{16}$ in. (even mm), nor greater than the minimum diameter plus $^1/_8$ in. (3 mm) or $2^1/_4$ times the thickness of the weld.

The minimum center-to-center spacing of plug welds shall be four times the diameter of the hole.

The length of slot for a slot weld shall not exceed 10 times the thickness of the weld. The width of the slot shall be not less than the thickness of the part containing it plus $^5/_{16}$ in. (8 mm) rounded to the next larger odd $^1/_{16}$ in. (even mm), nor shall it be larger than $2^1/_4$ times the thickness of the weld. The ends of the slot shall be semicircular or shall have the corners rounded to a radius of not less than the thickness of the part containing it, except those ends which extend to the edge of the part.

The minimum spacing of lines of slot welds in a direction transverse to their length shall be four times the width of the slot. The minimum center-to-center spacing in a longitudinal direction on any line shall be two times the length of the slot.

The thickness of plug or slot welds in material $^5/_8$ in. (16 mm) or less in thickness shall be equal to the thickness of the material. In material over $^5/_8$-in. (16 mm) thick, the thickness of the weld shall be at least one-half the thickness of the material but not less than $^5/_8$ in. (16 mm).

4. Strength

The *design strength*, ϕR_n and the *allowable strength*, R_n/Ω, of welded joints shall be the lower value of the base material strength determined according to the *limit states* of *tensile rupture* and *shear rupture* and the *weld metal* strength determined according to the limit state of *rupture* as follows:

For the base metal

$$R_n = F_{nBM}A_{BM} \tag{J2-2}$$

TABLE J2.5
Available Strength of Welded Joints, ksi (MPa)

Load Type and Direction Relative to Weld Axis	Pertinent Metal	ϕ and Ω	Nominal Stress (F_{nBM} or F_{nw}) ksi (MPa)	Effective Area (A_{BM} or A_{we}) in.^{2} (mm^2)	Required Filler Metal Strength Level [a][b]
COMPLETE-JOINT-PENETRATION GROOVE WELDS					
Tension Normal to weld axis	Strength of the joint is controlled by the base metal				Matching filler metal shall be used. For T- and corner joints with backing left in place, notch tough filler metal is required. See Section J2.6.
Compression Normal to weld axis	Strength of the joint is controlled by the base metal				Filler metal with a strength level equal to or one strength level less than matching filler metal is permitted.
Tension or compression Parallel to weld axis	Tension or compression in parts joined parallel to a weld need not be considered in design of welds joining the parts.				Filler metal with a strength level equal to or less than matching filler metal is permitted.
Shear	Strength of the joint is controlled by the base metal				Matching filler metal shall be used.[c]
PARTIAL-JOINT-PENETRATION GROOVE WELDS INCLUDING FLARE V-GROOVE AND FLARE BEVEL GROOVE WELDS					
Tension Normal to weld axis	Base	$\phi = 0.75$ $\Omega = 2.00$	F_u	See J4	Filler metal with a strength level equal to or less than matching filler metal is permitted.
	Weld	$\phi = 0.80$ $\Omega = 1.88$	$0.60F_{EXX}$	See J2.1a	
Compression Column to base plate and column splices designed per Section J1.4(1)	Compressive stress need not be considered in design of welds joining the parts.				
Compression Connections of members designed to bear other than columns as described in Section J1.4(2)	Base	$\phi = 0.90$ $\Omega = 1.67$	F_y	See J4	
	Weld	$\phi = 0.80$ $\Omega = 1.88$	$0.60F_{EXX}$	See J2.1a	
Compression Connections not finished-to-bear	Base	$\phi = 0.90$ $\Omega = 1.67$	F_y	See J4	
	Weld	$\phi = 0.80$ $\Omega = 1.88$	$0.90F_{EXX}$	See J2.1a	
Tension or compression Parallel to weld axis	Tension or compression in parts joined parallel to a weld need not be considered in design of welds joining the parts.				
Shear	Base	Governed by J4			
	Weld	$\phi = 0.75$ $\Omega = 2.00$	$0.60F_{EXX}$	See J2.1a	

TABLE J2.5 (continued)
Available Strength of Welded Joints, ksi (MPa)

Load Type and Direction Relative to Weld Axis	Pertinent Metal	ϕ and Ω	Nominal Stress (F_{nBM} or F_{nw}) ksi (MPa)	Effective Area (A_{BM} or A_{we}) in.^{2} (mm^2)	Required Filler Metal Strength Level [a][b]
FILLET WELDS INCLUDING FILLETS IN HOLES AND SLOTS AND SKEWED T–JOINTS					
Shear	Base	Governed by J4			Filler metal with a strength level equal to or less than matching filler metal is permitted.
	Weld	$\phi = 0.75$ $\Omega = 2.00$	$0.60F_{EXX}$[d]	See J2.2a	
Tension or compression Parallel to weld axis	Tension or compression in parts joined parallel to a weld need not be considered in design of welds joining the parts.				
PLUG AND SLOT WELDS					
Shear Parallel to faying surface on the effective area	Base	Governed by J4			Filler metal with a strength level equal to or less than matching filler metal is permitted.
	Weld	$\phi = 0.75$ $\Omega = 2.00$	$0.60F_{EXX}$	See J2.3a	

[a] For matching weld metal see AWS D1.1/D1.1M, Section 3.3.
[b] Filler metal with a strength level one strength level greater than matching is permitted.
[c] Filler metals with a strength level less than matching may be used for groove welds between the webs and flanges of built-up sections transferring shear loads, or in applications where high restraint is a concern. In these applications, the weld joint shall be detailed and the weld shall be designed using the thickness of the material as the effective throat, where $\phi = 0.80$, $\Omega = 1.88$ and $0.60F_{EXX}$ is the nominal strength.
[d] Alternatively, the provisions of Section J2.4(a) are permitted provided the deformation compatibility of the various weld elements is considered. Sections J2.4(b) and (c) are special applications of Section J2.4(a) that provide for deformation compatibility.

For the weld metal

$$R_n = F_{nw}A_{we} \tag{J2-3}$$

where

F_{nBM} = nominal *stress* of the base metal, ksi (MPa)
F_{nw} = nominal stress of the weld metal, ksi (MPa)
A_{BM} = cross-sectional area of the base metal, in.^{2} (mm^2)
A_{we} = effective area of the weld, in.^{2} (mm^2)

The values of ϕ, Ω, F_{nBM} and F_{nw} and limitations thereon are given in Table J2.5.

Alternatively, for *fillet welds* the *available strength* is permitted to be determined as follows:

$$\phi = 0.75 \text{ (LRFD)} \qquad \Omega = 2.00 \text{ (ASD)}$$

(a) For a linear weld group with a uniform leg size, loaded through the center of gravity

$$R_n = F_{nw}A_{we} \tag{J2-4}$$

where

$$F_{nw} = 0.60F_{EXX}\left(1.0 + 0.50 \sin^{1.5} \theta\right) \tag{J2-5}$$

and

F_{EXX} = *filler metal* classification strength, ksi (MPa)

θ = angle of loading measured from the weld longitudinal axis, degrees

User Note: A linear weld group is one in which all elements are in a line or are parallel.

(b) For weld elements within a weld group that are analyzed using an instantaneous center of rotation method, the components of the *nominal strength*, R_{nx} and R_{ny}, and the *nominal moment capacity*, M_n, are permitted to be determined as follows:

$$R_{nx} = \sum F_{nwix} A_{wei} \tag{J2-6a}$$

$$R_{ny} = \sum F_{nwiy} A_{wei} \tag{J2-6b}$$

$$M_n = \sum \left[F_{nwiy} A_{wei} (x_i) - F_{nwix} A_{wei} (y_i) \right] \tag{J2-7}$$

where

A_{wei} = effective area of weld throat of the ith weld element, in.^{2} (mm^2)

$F_{nwi} = 0.60 F_{EXX} (1.0 + 0.50 \sin^{1.5} \theta_i) f(p_i)$ (J2-8)

$f(p_i) = [p_i (1.9 - 0.9 p_i)]^{0.3}$ (J2-9)

F_{nwi} = nominal stress in the ith weld element, ksi (MPa)

F_{nwix} = x-component of nominal stress, F_{nwi}, ksi (MPa)

F_{nwiy} = y-component of nominal stress, F_{nwi}, ksi (MPa)

p_i = Δ_i / Δ_{mi}, ratio of element i deformation to its deformation at maximum stress

r_{cr} = distance from instantaneous center of rotation to weld element with minimum Δ_{ui}/r_i ratio, in. (mm)

r_i = distance from instantaneous center of rotation to ith weld element, in. (mm)

x_i = x component of r_i

y_i = y component of r_i

Δ_i = $r_i \Delta_{ucr} / r_{cr}$ = deformation of the ith weld element at an intermediate stress level, linearly proportioned to the critical deformation based on distance from the instantaneous center of rotation, r_i, in. (mm)

$\Delta_{mi} = 0.209 (\theta_i + 2)^{-0.32} w$, deformation of the ith weld element at maximum stress, in. (mm)

Δ_{ucr} = deformation of the weld element with minimum Δ_{ui}/r_i ratio at ultimate stress (rupture), usually in the element furthest from instantaneous center of rotation, in. (mm)

$\Delta_{ui} = 1.087 (\theta_i + 6)^{-0.65} w \le 0.17 w$, deformation of the ith weld element at ultimate stress (rupture), in. (mm)

θ_i = angle between the longitudinal axis of ith weld element and the direction of the resultant force acting on the element, degrees

(c) For fillet weld groups concentrically loaded and consisting of elements with a uniform leg size that are oriented both longitudinally and transversely to the direction of applied *load*, the combined strength, R_n, of the fillet weld group shall be determined as the greater of

(i) $R_n = R_{nwl} + R_{nwt}$ (J2-10a)

or

(ii) $R_n = 0.85\ R_{nwl} + 1.5\ R_{nwt}$ (J2-10b)

where

R_{nwl} = total nominal strength of longitudinally loaded fillet welds, as determined in accordance with Table J2.5, kips (N)

R_{nwt} = total nominal strength of transversely loaded fillet welds, as determined in accordance with Table J2.5 without the alternate in Section J2.4(a), kips (N)

5. Combination of Welds

If two or more of the general types of welds (groove, fillet, plug, slot) are combined in a single *joint*, the strength of each shall be separately computed with reference to the axis of the group in order to determine the strength of the combination.

6. Filler Metal Requirements

The choice of *filler metal* for use with *complete-joint-penetration groove welds* subject to tension normal to the effective area shall comply with the requirements for matching filler metals given in AWS D1.1/D1.1M.

User Note: The following User Note Table summarizes the AWS D1.1/D1.1M provisions for matching filler metals. Other restrictions exist. For a complete list of base metals and prequalified matching filler metals see AWS D1.1/D1.1M, Table 3.1.

Base Metal		Matching Filler Metal
A36 ≤ 3/4 in. thick		60 & 70 ksi filler metal
A36 > 3/4 in. A588* A1011	A572 (Gr. 50 & 55) A913 (Gr. 50) A992 A1018	SMAW: E7015, E7016, E7018, E7028 Other processes: 70 ksi filler metal
A913	(Gr. 60 & 65)	80 ksi filler metal

*For corrosion resistance and color similar to the base metal, see AWS D1.1/D1.1M, subclause 3.7.3.

Notes:
Filler metals shall meet the requirements of AWS A5.1, A5.5, A5.17, A5.18, A5.20, A5.23, A5.28 or A5.29.
In joints with base metals of different strengths, use either a filler metal that matches the higher strength base metal or a filler metal that matches the lower strength and produces a low hydrogen deposit.

Filler metal with a specified minimum Charpy V-*notch toughness* of 20 ft-lb (27 J) at 40 °F (4 °C) or lower shall be used in the following *joints*:

(1) Complete-joint-penetration groove welded T- and corner joints with steel backing left in place, subject to tension normal to the effective area, unless the joints

are designed using the *nominal strength* and *resistance factor* or *safety factor* as applicable for a *partial-joint-penetration groove weld*

(2) Complete-joint-penetration groove welded *splices* subject to tension normal to the effective area in heavy sections as defined in Sections A3.1c and A3.1d

The manufacturer's Certificate of Conformance shall be sufficient evidence of compliance.

7. Mixed Weld Metal

When Charpy V-*notch toughness* is specified, the process consumables for all *weld metal*, tack welds, root pass and subsequent passes deposited in a *joint* shall be compatible to ensure notch-tough composite weld metal.

J3. BOLTS AND THREADED PARTS

1. High-Strength Bolts

Use of *high-strength bolts* shall conform to the provisions of the *Specification for Structural Joints Using High-Strength Bolts*, hereafter referred to as the RCSC *Specification*, as approved by the Research Council on Structural Connections, except as otherwise provided in this Specification. High-strength bolts in this Specification are grouped according to material strength as follows:

Group A—ASTM A325, A325M, F1852, A354 Grade BC, and A449

Group B—ASTM A490, A490M, F2280, and A354 Grade BD

When assembled, all *joint* surfaces, including those adjacent to the washers, shall be free of scale, except tight *mill scale*.

Bolts are permitted to be installed to the snug-tight condition when used in:

(a) *bearing-type connections* except as noted in Section E6 or Section J1.10
(b) tension or combined shear and tension applications, for Group A bolts only, where loosening or *fatigue* due to vibration or *load* fluctuations are not design considerations

The snug-tight condition is defined as the tightness required to bring the connected plies into firm contact. Bolts to be tightened to a condition other than snug tight shall be clearly identified on the *design drawings*.

All high-strength bolts specified on the design drawings to be used in pretensioned or slip-critical joints shall be tightened to a bolt tension not less than that given in Table J3.1 or J3.1M. Installation shall be by any of the following methods: *turn-of-nut method*, a direct-tension-indicator, twist-off-type tension-control bolt, calibrated wrench, or alternative design bolt.

User Note: There are no specific minimum or maximum tension requirements for snug-tight bolts. Fully *pretensioned bolts* such as ASTM F1852 or F2280 are permitted unless specifically prohibited on design drawings.

TABLE J3.1
Minimum Bolt Pretension, kips*

Bolt Size, in.	Group A (e.g., A325 Bolts)	Group B (e.g., A490 Bolts)
1/2	12	15
5/8	19	24
3/4	28	35
7/8	39	49
1	51	64
1 1/8	56	80
1 1/4	71	102
1 3/8	85	121
1 1/2	103	148

*Equal to 0.70 times the minimum tensile strength of bolts, rounded off to nearest kip, as specified in ASTM specifications for A325 and A490 bolts with UNC threads.

TABLE J3.1M
Minimum Bolt Pretension, kN*

Bolt Size, mm	Group A (e.g., A325M Bolts)	Group B (e.g., A490M Bolts)
M16	91	114
M20	142	179
M22	176	221
M24	205	257
M27	267	334
M30	326	408
M36	475	595

*Equal to 0.70 times the minimum tensile strength of bolts, rounded off to nearest kN, as specified in ASTM specifications for A325M and A490M bolts with UNC threads.

When bolt requirements cannot be provided within the RCSC *Specification* limitations because of requirements for lengths exceeding 12 diameters or diameters exceeding 1 1/2 in. (38 mm), bolts or threaded rods conforming to Group A or Group B materials are permitted to be used in accordance with the provisions for threaded parts in Table J3.2.

When ASTM A354 Grade BC, A354 Grade BD, or A449 bolts and threaded rods are used in slip-critical connections, the bolt geometry including the thread *pitch*, thread length, head and nut(s) shall be equal to or (if larger in diameter) proportional to that required by the RCSC *Specification*. Installation shall comply with all applicable requirements of the RCSC *Specification* with modifications as required for the increased diameter and/or length to provide the design pretension.

TABLE J3.2
Nominal Strength of Fasteners and Threaded Parts, ksi (MPa)

Description of Fasteners	Nominal Tensile Strength, F_{nt}, ksi (MPa)[a]	Nominal Shear Strength in Bearing-Type Connections, F_{nv}, ksi (MPa)[b]
A307 bolts	45 (310)	27 (188)[c] [d]
Group A (e.g., A325) bolts, when threads are not excluded from shear planes	90 (620)	54 (372)
Group A (e.g., A325) bolts, when threads are excluded from shear planes	90 (620)	68 (457)
Group B (e.g., A490) bolts, when threads are not excluded from shear planes	113 (780)	68 (457)
Group B (e.g., A490) bolts, when threads are excluded from shear planes	113 (780)	84 (579)
Threaded parts meeting the requirements of Section A3.4, when threads are not excluded from shear planes	$0.75F_u$	$0.450F_u$
Threaded parts meeting the requirements of Section A3.4, when threads are excluded from shear planes	$0.75F_u$	$0.563F_u$

[a] For high-strength bolts subject to tensile fatigue loading, see Appendix 3.
[b] For end loaded connections with a fastener pattern length greater than 38 in. (965 mm), F_{nv} shall be reduced to 83.3% of the tabulated values. Fastener pattern length is the maximum distance parallel to the line of force between the centerline of the bolts connecting two parts with one faying surface.
[c] For A307 bolts the tabulated values shall be reduced by 1% for each $^1/_{16}$ in. (2 mm) over 5 diameters of length in the grip.
[d] Threads permitted in shear planes.

2. Size and Use of Holes

The maximum sizes of holes for bolts are given in Table J3.3 or Table J3.3M, except that larger holes, required for tolerance on location of anchor rods in concrete foundations, are permitted in *column* base details.

Standard holes or *short-slotted holes* transverse to the direction of the *load* shall be provided in accordance with the provisions of this specification, unless oversized holes, short-slotted holes parallel to the load, or *long-slotted holes* are approved

TABLE J3.3
Nominal Hole Dimensions, in.

Bolt Diameter, in.	Hole Dimensions			
	Standard (Dia.)	Oversize (Dia.)	Short-Slot (Width × Length)	Long-Slot (Width × Length)
1/2	9/16	5/8	9/16 × 11/16	9/16 × 1 1/4
5/8	11/16	13/16	11/16 × 7/8	11/16 × 1 9/16
3/4	13/16	15/16	13/16 × 1	13/16 × 1 7/8
7/8	15/16	1 1/16	15/16 × 1 1/8	15/16 × 2 3/16
1	1 1/16	1 1/4	1 1/16 × 1 5/16	1 1/16 × 2½
≥ 1 1/8	d + 1/16	d + 5/16	(d + 1/16) × (d + 3/8)	(d + 1/16) × (2.5 × d)

TABLE J3.3M
Nominal Hole Dimensions, mm

Bolt Diameter, mm	Hole Dimensions			
	Standard (Dia.)	Oversize (Dia.)	Short-Slot (Width × Length)	Long-Slot (Width × Length)
M16	18	20	18 × 22	18 × 40
M20	22	24	22 × 26	22 × 50
M22	24	28	24 × 30	24 × 55
M24	27[a]	30	27 × 32	27 × 60
M27	30	35	30 × 37	30 × 67
M30	33	38	33 × 40	33 × 75
≥ M36	d + 3	d + 8	(d + 3) × (d + 10)	(d + 3) × 2.5d

[a] Clearance provided allows the use of a 1-in. bolt if desirable.

by the *engineer of record*. Finger *shims* up to 1/4 in. (6 mm) are permitted in *slip-critical connections* designed on the basis of standard holes without reducing the nominal shear strength of the *fastener* to that specified for slotted holes.

Oversized holes are permitted in any or all plies of slip-critical connections, but they shall not be used in *bearing-type connections*. Hardened washers shall be installed over oversized holes in an outer ply.

Short-slotted holes are permitted in any or all plies of slip-critical or bearing-type connections. The slots are permitted without regard to direction of loading in slip-critical connections, but the length shall be normal to the direction of the load in bearing-type connections. Washers shall be installed over short-slotted holes in an outer ply; when high-strength bolts are used, such washers shall be hardened washers conforming to ASTM F436.

When Group B bolts over 1 in. (25 mm) in diameter are used in slotted or oversized holes in external plies, a single hardened washer conforming to ASTM F436, except with $^5/_{16}$-in. (8 mm) minimum thickness, shall be used in lieu of the standard washer.

User Note: Washer requirements are provided in the RCSC *Specification*, Section 6.

Long-slotted holes are permitted in only one of the connected parts of either a slip-critical or bearing-type connection at an individual *faying surface*. Long-slotted holes are permitted without regard to direction of loading in slip-critical connections, but shall be normal to the direction of load in bearing-type connections. Where long-slotted holes are used in an outer ply, plate washers, or a continuous bar with standard holes, having a size sufficient to completely cover the slot after installation, shall be provided. In high-strength bolted connections, such plate washers or continuous bars shall be not less than $^5/_{16}$-in. (8 mm) thick and shall be of structural grade material, but need not be hardened. If hardened washers are required for use of high-strength bolts, the hardened washers shall be placed over the outer surface of the plate washer or bar.

3. Minimum Spacing

The distance between centers of standard, oversized or slotted holes shall not be less than $2^2/_3$ times the nominal diameter, d, of the *fastener*; a distance of $3d$ is preferred.

User Note: ASTM F1554 anchor rods may be furnished in accordance to product specifications with a body diameter less than the nominal diameter. Load effects such as bending and elongation should be calculated based on minimum diameters permitted by the product specification. See ASTM F1554 and the table, "Applicable ASTM Specifications for Various Types of Structural Fasteners," in Part 2 of the AISC *Steel Construction Manual*.

4. Minimum Edge Distance

The distance from the center of a standard hole to an edge of a connected part in any direction shall not be less than either the applicable value from Table J3.4 or Table J3.4M, or as required in Section J3.10. The distance from the center of an oversized or slotted hole to an edge of a connected part shall be not less than that required for a standard hole to an edge of a connected part plus the applicable increment, C_2, from Table J3.5 or Table J3.5M.

User Note: The edge distances in Tables J3.4 and J3.4M are minimum edge distances based on standard fabrication practices and workmanship tolerances. The appropriate provisions of Sections J3.10 and J4 must be satisfied.

5. Maximum Spacing and Edge Distance

The maximum distance from the center of any bolt to the nearest edge of parts in contact shall be 12 times the thickness of the connected part under consideration,

TABLE J3.4
Minimum Edge Distance[a] from Center of Standard Hole[b] to Edge of Connected Part, in.

Bolt Diameter, in.	Minimum Edge Distance
1/2	3/4
5/8	7/8
3/4	1
7/8	1 1/8
1	1 1/4
1 1/8	1 1/2
1 1/4	1 5/8
Over 1 1/4	1 1/4 × d

[a] If necessary, lesser edge distances are permitted provided the appropriate provisions from Sections J3.10 and J4 are satisfied, but edge distances less than one bolt diameter are not permitted without approval from the engineer of record.
[b] For oversized or slotted holes, see Table J3.5.

TABLE J3.4M
Minimum Edge Distance[a] from Center of Standard Hole[b] to Edge of Connected Part, mm

Bolt Diameter, mm	Minimum Edge Distance
16	22
20	26
22	28
24	30
27	34
30	38
36	46
Over 36	1.25d

[a] If necessary, lesser edge distances are permitted provided the appropriate provisions from Sections J3.10 and J4 are satisfied, but edge distances less than one bolt diameter are not permitted without approval from the engineer of record.
[b] For oversized or slotted holes, see Table J3.5M.

TABLE J3.5
Values of Edge Distance Increment C_2, in.

Nominal Diameter of Fastener, in.	Oversized Holes	Slotted Holes		
		Long Axis Perpendicular to Edge		Long Axis Parallel to Edge
		Short Slots	Long Slots[a]	
≤ 7/8	1/16	1/8	3/4d	0
1	1/8	1/8		
≥ 1 1/8	1/8	3/16		

[a] When length of slot is less than maximum allowable (see Table J3.3), C_2 is permitted to be reduced by one-half the difference between the maximum and actual slot lengths.

TABLE J3.5M
Values of Edge Distance Increment C_2, mm

Nominal Diameter of Fastener, mm	Oversized Holes	Slotted Holes		
		Long Axis Perpendicular to Edge		Long Axis Parallel to Edge
		Short Slots	Long Slots[a]	
≤ 22	2	3	0.75d	0
24	3	3		
≥ 27	3	5		

[a] When length of slot is less than maximum allowable (see Table J3.3M), C_2 is permitted to be reduced by one-half the difference between the maximum and actual slot lengths.

but shall not exceed 6 in. (150 mm). The longitudinal spacing of *fasteners* between elements consisting of a plate and a shape or two plates in continuous contact shall be as follows:

(a) For painted members or unpainted members not subject to corrosion, the spacing shall not exceed 24 times the thickness of the thinner part or 12 in. (305 mm).
(b) For unpainted members of *weathering steel* subject to atmospheric corrosion, the spacing shall not exceed 14 times the thickness of the thinner part or 7 in. (180 mm).

User Note: Dimensions in (a) and (b) do not apply to elements consisting of two shapes in continuous contact.

6. Tensile and Shear Strength of Bolts and Threaded Parts

The *design tensile* or *shear strength*, ϕR_n, and the *allowable tensile* or *shear strength,* R_n/Ω, of a snug-tightened or pretensioned high-strength bolt or threaded part shall be determined according to the *limit states* of *tension rupture* and *shear rupture* as follows:

$$R_n = F_n A_b \tag{J3-1}$$

$$\phi = 0.75 \text{ (LRFD)} \qquad \Omega = 2.00 \text{ (ASD)}$$

where

A_b = nominal unthreaded body area of bolt or threaded part, in.^{2} (mm^2)
F_n = nominal tensile stress, F_{nt}, or shear stress, F_{nv}, from Table J3.2, ksi (MPa)

The *required tensile strength* shall include any tension resulting from *prying action* produced by deformation of the connected parts.

User Note: The *force* that can be resisted by a snug-tightened or pretensioned high-strength bolt or threaded part may be limited by the *bearing* strength at the bolt hole per Section J3.10. The effective strength of an individual *fastener* may be taken as the lesser of the fastener shear strength per Section J3.6 or the bearing strength at the bolt hole per Section J3.10. The strength of the bolt group is taken as the sum of the effective strengths of the individual fasteners.

7. Combined Tension and Shear in Bearing-Type Connections

The *available tensile strength* of a bolt subjected to combined tension and shear shall be determined according to the *limit states* of *tension and shear rupture* as follows:

$$R_n = F'_{nt} A_b \tag{J3-2}$$

$$\phi = 0.75 \text{ (LRFD)} \qquad \Omega = 2.00 \text{ (ASD)}$$

where

F'_{nt} = nominal tensile *stress* modified to include the effects of shear stress, ksi (MPa)

$$F'_{nt} = 1.3F_{nt} - \frac{F_{nt}}{\phi F_{nv}} f_{rv} \le F_{nt} \quad \text{(LRFD)} \tag{J3-3a}$$

$$F'_{nt} = 1.3F_{nt} - \frac{\Omega F_{nt}}{F_{nv}} f_{rv} \le F_{nt} \quad \text{(ASD)} \tag{J3-3b}$$

F_{nt} = nominal tensile stress from Table J3.2, ksi (MPa)
F_{nv} = nominal shear stress from Table J3.2, ksi (MPa)
f_{rv} = required shear stress using *LRFD* or *ASD load combinations*, ksi (MPa)

The available shear stress of the *fastener* shall equal or exceed the required shear stress, f_{rv}.

User Note: Note that when the required stress, f, in either shear or tension, is less than or equal to 30% of the corresponding *available stress*, the effects of combined *stress* need not be investigated. Also note that Equations J3-3a and J3-3b can be rewritten so as to find a nominal shear stress, F'_{nv}, as a function of the required tensile stress, f_t.

8. High-Strength Bolts in Slip-Critical Connections

Slip-critical connections shall be designed to prevent *slip* and for the *limit states* of *bearing-type connections*. When slip-critical bolts pass through *fillers*, all surfaces subject to slip shall be prepared to achieve design slip resistance.

The available slip resistance for the limit state of slip shall be determined as follows:

$$R_n = \mu D_u h_f T_b n_s \quad \text{(J3-4)}$$

(a) For standard size and short-slotted holes perpendicular to the direction of the *load*

$$\phi = 1.00 \text{ (LRFD)} \qquad \Omega = 1.50 \text{ (ASD)}$$

(b) For oversized and short-slotted holes parallel to the direction of the load

$$\phi = 0.85 \text{ (LRFD)} \qquad \Omega = 1.76 \text{ (ASD)}$$

(c) For long-slotted holes

$$\phi = 0.70 \text{ (LRFD)} \qquad \Omega = 2.14 \text{ (ASD)}$$

where

μ = mean slip coefficient for Class A or B surfaces, as applicable, and determined as follows, or as established by tests:

(i) For Class A surfaces (unpainted clean *mill scale* steel surfaces or surfaces with Class A coatings on blast-cleaned steel or hot-dipped galvanized and roughened surfaces)

$$\mu = 0.30$$

(ii) For Class B surfaces (unpainted blast-cleaned steel surfaces or surfaces with Class B coatings on blast-cleaned steel)

$$\mu = 0.50$$

D_u = 1.13, a multiplier that reflects the ratio of the mean installed bolt pretension to the specified minimum bolt pretension. The use of other values may be approved by the *engineer of record*.

T_b = minimum *fastener* tension given in Table J3.1, kips, or Table J3.1M, kN

h_f = factor for fillers, determined as follows:

(i) Where there are no fillers or where bolts have been added to distribute loads in the filler

$$h_f = 1.0$$

(ii) Where bolts have not been added to distribute the *load* in the filler:

(a) For one filler between connected parts

$$h_f = 1.0$$

(b) For two or more fillers between connected parts

$$h_f = 0.85$$

n_s = number of slip planes required to permit the connection to slip

9. Combined Tension and Shear in Slip-Critical Connections

When a *slip-critical connection* is subjected to an applied tension that reduces the net clamping force, the available *slip* resistance per bolt, from Section J3.8, shall be multiplied by the factor, k_{sc}, as follows:

$$k_{sc} = 1 - \frac{T_u}{D_u T_b n_b} \quad \text{(LRFD)} \tag{J3-5a}$$

$$k_{sc} = 1 - \frac{1.5T_a}{D_u T_b n_b} \quad \text{(ASD)} \tag{J3-5b}$$

where

T_a = required tension force using *ASD load combinations*, kips (kN)
T_u = required tension force using *LRFD load combinations*, kips (kN)
n_b = number of bolts carrying the applied tension

10. Bearing Strength at Bolt Holes

The *available bearing strength*, ϕR_n and R_n/Ω, at bolt holes shall be determined for the *limit state* of *bearing* as follows:

$$\phi = 0.75 \text{ (LRFD)} \qquad \Omega = 2.00 \text{ (ASD)}$$

The nominal bearing strength of the connected material, R_n, is determined as follows:

(a) For a bolt in a *connection* with standard, oversized and short-slotted holes, independent of the direction of loading, or a long-slotted hole with the slot parallel to the direction of the bearing *force*

(i) When deformation at the bolt hole at *service load* is a design consideration

$$R_n = 1.2 l_c t F_u \le 2.4 dt F_u \tag{J3-6a}$$

(ii) When deformation at the bolt hole at service load is not a design consideration

$$R_n = 1.5 l_c t F_u \le 3.0 dt F_u \tag{J3-6b}$$

(b) For a bolt in a connection with long-slotted holes with the slot perpendicular to the direction of force

$$R_n = 1.0 l_c t F_u \le 2.0 dt F_u \tag{J3-6c}$$

(c) For connections made using bolts that pass completely through an unstiffened box member or *HSS*, see Section J7 and Equation J7-1;

where

F_u = *specified minimum tensile strength* of the connected material, ksi (MPa)
d = nominal bolt diameter, in. (mm)
l_c = clear distance, in the direction of the force, between the edge of the hole and the edge of the adjacent hole or edge of the material, in. (mm)
t = thickness of connected material, in. (mm)

For connections, the bearing resistance shall be taken as the sum of the bearing resistances of the individual bolts.

Bearing strength shall be checked for both bearing-type and *slip-critical connections*. The use of oversized holes and short- and long-slotted holes parallel to the line of force is restricted to slip-critical connections per Section J3.2.

User Note: The effective strength of an individual *fastener* is the lesser of the fastener shear strength per Section J3.6 or the bearing strength at the bolt hole per Section J3.10. The strength of the bolt group is the sum of the effective strengths of the individual fasteners.

11. Special Fasteners

The *nominal strength* of special *fasteners* other than the bolts presented in Table J3.2 shall be verified by tests.

12. Tension Fasteners

When bolts or other *fasteners* in tension are attached to an unstiffened box or *HSS* wall, the strength of the wall shall be determined by rational analysis.

J4. AFFECTED ELEMENTS OF MEMBERS AND CONNECTING ELEMENTS

This section applies to elements of members at *connections* and connecting elements, such as plates, gussets, angles and brackets.

1. Strength of Elements in Tension

The *design strength*, ϕR_n, and the *allowable strength*, R_n/Ω, of affected and connecting elements loaded in tension shall be the lower value obtained according to the *limit states* of *tensile yielding* and *tensile rupture*.

(a) For tensile yielding of connecting elements

$$R_n = F_y A_g \tag{J4-1}$$

$$\phi = 0.90 \text{ (LRFD)} \qquad \Omega = 1.67 \text{ (ASD)}$$

(b) For tensile rupture of connecting elements

$$R_n = F_u A_e \tag{J4-2}$$

$$\phi = 0.75 \text{ (LRFD)} \qquad \Omega = 2.00 \text{ (ASD)}$$

where

A_e = *effective net area* as defined in Section D3, in.^{2} (mm^2); for bolted *splice* plates, $A_e = A_n \le 0.85A_g$.

User Note: The effective net area of the connection plate may be limited due to *stress* distribution as calculated by methods such as the Whitmore section.

2. Strength of Elements in Shear

The available shear strength of affected and connecting elements in shear shall be the lower value obtained according to the *limit states* of *shear yielding* and *shear rupture*:

(a) For shear yielding of the element:

$$R_n = 0.60F_yA_{gv} \tag{J4-3}$$

$$\phi = 1.00 \text{ (LRFD)} \qquad \Omega = 1.50 \text{ (ASD)}$$

where

A_{gv} = gross area subject to shear, in.^{2} (mm^2)

(b) For shear rupture of the element:

$$R_n = 0.60F_uA_{nv} \tag{J4-4}$$

$$\phi = 0.75 \text{ (LRFD)} \qquad \Omega = 2.00 \text{ (ASD)}$$

where

A_{nv} = *net area* subject to shear, in.^{2} (mm^2)

3. Block Shear Strength

The *available strength* for the *limit state* of *block shear rupture* along a shear failure path or paths and a perpendicular tension failure path shall be taken as

$$R_n = 0.60F_uA_{nv} + U_{bs}F_uA_{nt} \le 0.60F_yA_{gv} + U_{bs}F_uA_{nt} \tag{J4-5}$$

$$\phi = 0.75 \text{ (LRFD)} \qquad \Omega = 2.00 \text{ (ASD)}$$

where

A_{nt} = *net area* subject to tension, in.^{2} (mm^2)

Where the tension *stress* is uniform, $U_{bs} = 1$; where the tension stress is nonuniform, $U_{bs} = 0.5$.

User Note: Typical cases where U_{bs} should be taken equal to 0.5 are illustrated in the Commentary.

4. Strength of Elements in Compression

The *available strength* of connecting elements in compression for the *limit states* of *yielding* and *buckling* shall be determined as follows:

(a) When $KL/r \leq 25$

$$P_n = F_y A_g \tag{J4-6}$$

$$\phi = 0.90 \text{ (LRFD)} \qquad \Omega = 1.67 \text{ (ASD)}$$

(b) When $KL/r > 25$, the provisions of Chapter E apply.

5. Strength of Elements in Flexure

The available flexural strength of affected elements shall be the lower value obtained according to the *limit states* of flexural *yielding, local buckling,* flexural *lateral-torsional buckling* and flexural rupture.

J5. FILLERS

1. Fillers in Welded Connections

Whenever it is necessary to use *fillers* in joints required to transfer applied force, the fillers and the connecting welds shall conform to the requirements of Section J5.1a or Section J5.1b, as applicable.

1a. Thin Fillers

Fillers less than $^1/_4$ in. (6 mm) thick shall not be used to transfer *stress*. When the thickness of the fillers is less than $^1/_4$ in. (6 mm), or when the thickness of the filler is $^1/_4$ in. (6 mm) or greater but not adequate to transfer the applied force between the connected parts, the filler shall be kept flush with the edge of the outside connected part, and the size of the weld shall be increased over the required size by an amount equal to the thickness of the filler.

1b. Thick Fillers

When the thickness of the *fillers* is adequate to transfer the applied force between the connected parts, the filler shall extend beyond the edges of the outside connected base metal. The welds joining the outside connected base metal to the filler shall be sufficient to transmit the force to the filler and the area subjected to the applied force in the filler shall be adequate to avoid overstressing the filler. The welds joining the filler to the inside connected base metal shall be adequate to transmit the applied force.

2. Fillers in Bolted Connections

When a bolt that carries *load* passes through *fillers* that are equal to or less than $^1/_4$ in. (6 mm) thick, the shear strength shall be used without reduction. When a bolt that carries load passes through fillers that are greater than $^1/_4$ in. (6 mm) thick, one of the following requirements shall apply:

(a) The shear strength of the bolts shall be multiplied by the factor

$$1 - 0.4(t - 0.25)$$

$$[\text{S.I.: } 1 - 0.0154(t - 6)]$$

but not less than 0.85, where t is the total thickness of the fillers;

(b) The fillers shall be extended beyond the *joint* and the filler extension shall be secured with enough bolts to uniformly distribute the total *force* in the connected element over the combined cross section of the connected element and the fillers;
(c) The size of the joint shall be increased to accommodate a number of bolts that is equivalent to the total number required in (b) above; or
(d) The joint shall be designed to prevent *slip* in accordance with Section J3.8 using either Class B surfaces or Class A surfaces with turn-of-nut tightening.

J6. SPLICES

Groove-welded *splices* in *plate girders* and *beams* shall develop the *nominal strength* of the smaller spliced section. Other types of splices in cross sections of plate girders and beams shall develop the strength required by the forces at the point of the splice.

J7. BEARING STRENGTH

The *design bearing strength*, ϕR_n, and the *allowable bearing strength,* R_n/Ω, of surfaces in contact shall be determined for the *limit state* of *bearing (local compressive yielding)* as follows:

$$\phi = 0.75 \text{ (LRFD)} \qquad \Omega = 2.00 \text{ (ASD)}$$

The *nominal bearing strength*, R_n, shall be determined as follows:

(a) For *finished surfaces*, pins in reamed, drilled, or bored holes, and ends of *fitted bearing stiffeners*

$$R_n = 1.8F_yA_{pb} \tag{J7-1}$$

where
A_{pb} = projected area in bearing, in.^{2} (mm^2)
F_y = *specified minimum yield stress*, ksi (MPa)

(b) For *expansion rollers* and *rockers*
(i) When $d \le 25$ in. (635 mm)

$$R_n = 1.2(F_y - 13)l_b d/20 \tag{J7-2}$$

$$\text{(S.I.: } R_n = 1.2(F_y - 90)l_b d/20) \tag{J7-2M}$$

(ii) When $d > 25$ in. (635 mm)

$$R_n = 6.0(F_y - 13)l_b\sqrt{d}\,/20 \tag{J7-3}$$

$$\left(\text{S.I.}: R_n = 30.2(F_y - 90)l_b\sqrt{d}\,/20\right) \tag{J7-3M}$$

where
d = diameter, in. (mm)
l_b = length of bearing, in. (mm)

J8. COLUMN BASES AND BEARING ON CONCRETE

Proper provision shall be made to transfer the *column loads* and moments to the footings and foundations.

In the absence of code regulations, the *design bearing strength*, $\phi_c P_p$, and the *allowable bearing strength*, P_p/Ω_c, for the *limit state* of *concrete crushing* are permitted to be taken as follows:

$$\phi_c = 0.65 \text{ (LRFD)} \qquad \Omega_c = 2.31 \text{ (ASD)}$$

The *nominal bearing strength*, P_p, is determined as follows:

(a) On the full area of a concrete support:

$$P_p = 0.85 f_c' A_1 \tag{J8-1}$$

(b) On less than the full area of a concrete support:

$$P_p = 0.85 f_c' A_1 \sqrt{A_2 / A_1} \le 1.7 f_c' A_1 \tag{J8-2}$$

where

A_1 = area of steel concentrically bearing on a concrete support, in.^{2} (mm^2)
A_2 = maximum area of the portion of the supporting surface that is geometrically similar to and concentric with the loaded area, in.^{2} (mm^2)
f_c' = specified compressive strength of concrete, ksi (MPa)

J9. ANCHOR RODS AND EMBEDMENTS

Anchor rods shall be designed to provide the required resistance to *loads* on the completed structure at the base of *columns* including the net tensile components of any bending moment that may result from load combinations stipulated in Section B2. The anchor rods shall be designed in accordance with the requirements for threaded parts in Table J3.2.

Design of column bases and anchor rods for the transfer of forces to the concrete foundation including *bearing* against the concrete elements shall satisfy the requirements of ACI 318 or ACI 349.

User Note: When columns are required to resist a horizontal force at the base plate, bearing against the concrete elements should be considered.

When anchor rods are used to resist horizontal forces, hole size, anchor rod setting tolerance, and the horizontal movement of the column shall be considered in the design.

Larger oversized holes and slotted holes are permitted in base plates when adequate bearing is provided for the nut by using ASTM F844 washers or plate washers to bridge the hole.

User Note: The permitted hole sizes, corresponding washer dimensions and nuts are given in the AISC *Steel Construction Manual* and ASTM F1554.

User Note: See ACI 318 for embedment design and for shear friction design. See OSHA for special erection requirements for anchor rods.

J10. FLANGES AND WEBS WITH CONCENTRATED FORCES

This section applies to *single-* and *double-concentrated forces* applied normal to the flange(s) of wide flange sections and similar *built-up shapes*. A single-concentrated force can be either tensile or compressive. Double-concentrated forces are one tensile and one compressive and form a couple on the same side of the loaded member.

When the *required strength* exceeds the *available strength* as determined for the *limit states* listed in this section, *stiffeners* and/or *doublers* shall be provided and shall be sized for the difference between the required strength and the available strength for the applicable limit state. Stiffeners shall also meet the design requirements in Section J10.8. Doublers shall also meet the design requirement in Section J10.9.

User Note: See Appendix 6.3 for requirements for the ends of cantilever members.

Stiffeners are required at *unframed ends* of *beams* in accordance with the requirements of Section J10.7.

1. Flange Local Bending

This section applies to tensile *single-concentrated forces* and the tensile component of *double-concentrated forces*.

The *design strength*, ϕR_n, and the *allowable strength*, R_n/Ω, for the *limit state* of flange *local bending* shall be determined as follows:

$$R_n = 6.25 F_{yf} t_f^2 \qquad \text{(J10-1)}$$

$$\phi = 0.90 \text{ (LRFD)} \qquad \Omega = 1.67 \text{ (ASD)}$$

where

F_{yf} = *specified minimum yield stress* of the flange, ksi (MPa)
t_f = thickness of the loaded flange, in. (mm)

If the length of loading across the member flange is less than $0.15 b_f$, where b_f is the member flange width, Equation J10-1 need not be checked.

When the concentrated force to be resisted is applied at a distance from the member end that is less than $10 t_f$, R_n shall be reduced by 50%.

When required, a pair of *transverse stiffeners* shall be provided.

2. Web Local Yielding

This section applies to *single-concentrated forces* and both components of *double-concentrated forces*.

The *available strength* for the *limit state* of web *local yielding* shall be determined as follows:

$$\phi = 1.00 \text{ (LRFD)} \qquad \Omega = 1.50 \text{ (ASD)}$$

The *nominal strength*, R_n, shall be determined as follows:

(a) When the concentrated *force* to be resisted is applied at a distance from the member end that is greater than the depth of the member, d,

$$R_n = F_{yw} t_w (5k + l_b) \tag{J10-2}$$

(b) When the concentrated force to be resisted is applied at a distance from the member end that is less than or equal to the depth of the member, d,

$$R_n = F_{yw} t_w (2.5k + l_b) \tag{J10-3}$$

where

F_{yw} = *specified minimum yield stress* of the web material, ksi (MPa)
k = distance from outer face of the flange to the web toe of the fillet, in. (mm)
l_b = length of bearing (not less than k for end *beam* reactions), in. (mm)
t_w = thickness of web, in. (mm)

When required, a pair of *transverse stiffeners* or a *doubler* plate shall be provided.

3. Web Local Crippling

This section applies to compressive *single-concentrated forces* or the compressive component of *double-concentrated forces*.

The *available strength* for the *limit state* of *web local crippling* shall be determined as follows:

$$\phi = 0.75 \text{ (LRFD)} \qquad \Omega = 2.00 \text{ (ASD)}$$

The *nominal strength*, R_n, shall be determined as follows:

(a) When the concentrated compressive *force* to be resisted is applied at a distance from the member end that is greater than or equal to $d/2$:

$$R_n = 0.80 t_w^2 \left[1 + 3\left(\frac{l_b}{d}\right)\left(\frac{t_w}{t_f}\right)^{1.5}\right]\sqrt{\frac{EF_{yw}t_f}{t_w}} \tag{J10-4}$$

(b) When the concentrated compressive force to be resisted is applied at a distance from the member end that is less than $d/2$:

(i) For $l_b/d \le 0.2$

$$R_n = 0.40t_w^2\left[1+3\left(\frac{l_b}{d}\right)\left(\frac{t_w}{t_f}\right)^{1.5}\right]\sqrt{\frac{EF_{yw}t_f}{t_w}} \qquad \text{(J10-5a)}$$

(ii) For $l_b/d > 0.2$

$$R_n = 0.40t_w^2\left[1+\left(\frac{4l_b}{d}-0.2\right)\left(\frac{t_w}{t_f}\right)^{1.5}\right]\sqrt{\frac{EF_{yw}t_f}{t_w}} \qquad \text{(J10-5b)}$$

where

d = full nominal depth of the section, in. (mm)

When required, a *transverse stiffener*, a pair of transverse stiffeners, or a *doubler* plate extending at least one-half the depth of the web shall be provided.

4. Web Sidesway Buckling

This section applies only to compressive *single-concentrated forces* applied to members where relative lateral movement between the loaded compression flange and the tension flange is not restrained at the point of application of the concentrated *force*.

The *available strength* of the web for the *limit state* of *sidesway buckling* shall be determined as follows:

$$\phi = 0.85 \text{ (LRFD)} \qquad \Omega = 1.76 \text{ (ASD)}$$

The *nominal strength*, R_n, shall be determined as follows:

(a) If the compression flange is restrained against rotation

(i) When $(h/t_w)/(L_b/b_f) \le 2.3$

$$R_n = \frac{C_r t_w^3 t_f}{h^2}\left[1+0.4\left(\frac{h/t_w}{L_b/b_f}\right)^3\right] \qquad \text{(J10-6)}$$

(ii) When $(h/t_w)/(L_b/b_f) > 2.3$, the limit state of *web sidesway buckling* does not apply.

When the *required strength* of the web exceeds the available strength, local *lateral bracing* shall be provided at the tension flange or either a pair of *transverse stiffeners* or a *doubler* plate shall be provided.

(b) If the compression flange is not restrained against rotation

(i) When $(h/t_w)/(L_b/b_f) \le 1.7$

$$R_n = \frac{C_r t_w^3 t_f}{h^2}\left[0.4\left(\frac{h/t_w}{L_b/b_f}\right)^3\right] \qquad \text{(J10-7)}$$

(ii) When $(h/t_w)/(L_b/b_f) > 1.7$, the limit state of web sidesway buckling does not apply.

When the required strength of the web exceeds the available strength, local lateral bracing shall be provided at both flanges at the point of application of the concentrated forces.

In Equations J10-6 and J10-7, the following definitions apply:

C_r = 960,000 ksi (6.62×10^6 MPa) when $M_u < M_y$ (LRFD) or $1.5M_a < M_y$ (ASD) at the location of the force
= 480,000 ksi (3.31×10^6 MPa) when $M_u \geq M_y$ (LRFD) or $1.5M_a \geq M_y$ (ASD) at the location of the force

L_b = largest laterally *unbraced length* along either flange at the point of *load*, in. (mm)

M_a = required flexural strength using *ASD load combinations*, kip-in. (N-mm)

M_u = required flexural strength using *LRFD load combinations*, kip-in. (N-mm)

b_f = width of flange, in. (mm)

h = clear distance between flanges less the fillet or corner radius for rolled shapes; distance between adjacent lines of *fasteners* or the clear distance between flanges when welds are used for *built-up shapes*, in. (mm)

User Note: For determination of adequate restraint, refer to Appendix 6.

5. Web Compression Buckling

This section applies to a pair of compressive *single-concentrated forces* or the compressive components in a pair of *double-concentrated forces*, applied at both flanges of a member at the same location.

The *available strength* for the *limit state* of web *local buckling* shall be determined as follows:

$$R_n = \frac{24 t_w^3 \sqrt{EF_{yw}}}{h} \tag{J10-8}$$

$$\phi = 0.90 \text{ (LRFD)} \qquad \Omega = 1.67 \text{ (ASD)}$$

When the pair of concentrated compressive *forces* to be resisted is applied at a distance from the member end that is less than $d/2$, R_n shall be reduced by 50%.

When required, a single *transverse stiffener*, a pair of transverse stiffeners, or a *doubler* plate extending the full depth of the web shall be provided.

6. Web Panel Zone Shear

This section applies to *double-concentrated forces* applied to one or both flanges of a member at the same location.

The *available strength* of the web *panel zone* for the *limit state* of *shear yielding* shall be determined as follows:

$$\phi = 0.90 \text{ (LRFD)} \qquad \Omega = 1.67 \text{ (ASD)}$$

The *nominal strength*, R_n, shall be determined as follows:

(a) When the effect of panel-zone deformation on frame *stability* is not considered in the analysis:

(i) For $P_r \le 0.4P_c$

$$R_n = 0.60F_y d_c t_w \tag{J10-9}$$

(ii) For $P_r > 0.4P_c$

$$R_n = 0.60F_y d_c t_w \left(1.4 - \frac{P_r}{P_c}\right) \tag{J10-10}$$

(b) When frame stability, including plastic panel-zone deformation, is considered in the analysis:

(i) For $P_r \le 0.75P_c$

$$R_n = 0.60F_y d_c t_w \left(1 + \frac{3b_{cf}t_{cf}^2}{d_b d_c t_w}\right) \tag{J10-11}$$

(ii) For $P_r > 0.75P_c$

$$R_n = 0.60F_y d_c t_w \left(1 + \frac{3b_{cf}t_{cf}^2}{d_b d_c t_w}\right)\left(1.9 - \frac{1.2P_r}{P_c}\right) \tag{J10-12}$$

In Equations J10-9 through J10-12, the following definitions apply:

A_g = gross cross-sectional area of member, in.^{2} (mm^2)
b_{cf} = width of *column* flange, in. (mm)
d_b = depth of *beam*, in. (mm)
d_c = depth of column, in. (mm)
F_y = *specified minimum yield stress* of the column web, ksi (MPa)
$P_c = P_y$, kips (N) (LRFD)
$P_c = 0.60P_y$, kips (N) (ASD)
P_r = *required axial strength* using *LRFD* or *ASD load combinations,* kips (N)
$P_y = F_y A_g$, axial *yield strength* of the column, kips (N)
t_{cf} = thickness of column flange, in. (mm)
t_w = thickness of column web, in. (mm)

When required, *doubler* plate(s) or a pair of *diagonal stiffeners* shall be provided within the boundaries of the rigid connection whose webs lie in a common plane.

See Section J10.9 for doubler plate design requirements.

7. Unframed Ends of Beams and Girders

At *unframed ends* of *beams* and *girders* not otherwise restrained against rotation about their longitudinal axes, a pair of *transverse stiffeners*, extending the full depth of the web, shall be provided.

8. Additional Stiffener Requirements for Concentrated Forces

Stiffeners required to resist tensile concentrated *forces* shall be designed in accordance with the requirements of Section J4.1 and welded to the loaded flange and the web. The welds to the flange shall be sized for the difference between the *required strength* and *available strength*. The stiffener to web welds shall be sized to transfer to the web the algebraic difference in tensile force at the ends of the stiffener.

Stiffeners required to resist compressive concentrated forces shall be designed in accordance with the requirements in Section J4.4 and shall either bear on or be welded to the loaded flange and welded to the web. The welds to the flange shall be sized for the difference between the required strength and the applicable *limit state* strength. The weld to the web shall be sized to transfer to the web the algebraic difference in compression force at the ends of the stiffener. For *fitted bearing stiffeners*, see Section J7.

Transverse full depth bearing stiffeners for compressive forces applied to a *beam* or *plate girder* flange(s) shall be designed as axially compressed members (*columns*) in accordance with the requirements of Section E6.2 and Section J4.4. The member properties shall be determined using an effective length of $0.75h$ and a cross section composed of two stiffeners, and a strip of the web having a width of $25t_w$ at interior stiffeners and $12t_w$ at the ends of members. The weld connecting full depth bearing stiffeners to the web shall be sized to transmit the difference in compressive force at each of the stiffeners to the web.

Transverse and *diagonal stiffeners* shall comply with the following additional requirements:

(1) The width of each stiffener plus one-half the thickness of the column web shall not be less than one-third of the flange or moment connection plate width delivering the concentrated force.
(2) The thickness of a stiffener shall not be less than one-half the thickness of the flange or moment connection plate delivering the concentrated *load*, nor less than the width divided by 16.
(3) Transverse stiffeners shall extend a minimum of one-half the depth of the member except as required in Section J10.5 and Section J10.7.

9. Additional Doubler Plate Requirements for Concentrated Forces

Doubler plates required for compression strength shall be designed in accordance with the requirements of Chapter E.

Doubler plates required for *tensile strength* shall be designed in accordance with the requirements of Chapter D.

Doubler plates required for shear strength (see Section J10.6) shall be designed in accordance with the provisions of Chapter G.

Doubler plates shall comply with the following additional requirements:

(1) The thickness and extent of the doubler plate shall provide the additional material necessary to equal or exceed the strength requirements.
(2) The doubler plate shall be welded to develop the proportion of the total force transmitted to the doubler plate.

CHAPTER K

DESIGN OF HSS AND BOX MEMBER CONNECTIONS

This chapter addresses connections to *HSS* members and box sections of uniform wall thickness.

User Note: Connection strength is often governed by the size of HSS members, especially the wall thickness of truss chords, and this must be considered in the initial design.

The chapter is organized as follows:

K1. Concentrated Forces on HSS
K2. HSS-to-HSS Truss Connections
K3. HSS-to-HSS Moment Connections
K4. Welds of Plates and Branches to Rectangular HSS

User Note: See also Chapter J for additional requirements for bolting to HSS. See Section J3.10(c) for through-bolts.

User Note: Connection parameters must be within the limits of applicability. *Limit states* need only be checked when connection geometry or loading is within the parameters given in the description of the limit state.

K1. CONCENTRATED FORCES ON HSS

The *design strength*, ϕR_n, and the *allowable strength,* R_n/Ω, of *connections* shall be determined in accordance with the provisions of this chapter and the provisions of Section B3.6.

1. Definitions of Parameters

A_g = gross cross-sectional area of member, in.^{2} (mm^2)
B = overall width of rectangular *HSS* member, measured 90° to the plane of the connection, in. (mm)
B_p = width of plate, measured 90° to the plane of the connection, in. (mm)
D = outside diameter of round HSS, in. (mm)
F_c = *available stress*, ksi (MPa)
= F_y for LRFD; $0.60F_y$ for ASD
F_y = *specified minimum yield stress* of HSS member material, ksi (MPa)
F_{yp} = specified minimum yield stress of plate material, ksi (MPa)
F_u = *specified minimum tensile strength* of HSS member material, ksi (MPa)
H = overall height of rectangular HSS member, measured in the plane of the connection, in. (mm)

S = elastic section modulus of member, in.^{3} (mm^3)
l_b = bearing length of the *load*, measured parallel to the axis of the HSS member (or measured across the width of the HSS in the case of loaded cap plates), in. (mm)
t = *design wall thickness* of HSS member, in. (mm)
t_p = thickness of plate, in. (mm)

2. Round HSS

The *available strength* of connections with concentrated loads and within the limits in Table K1.1A shall be taken as shown in Table K1.1.

3. Rectangular HSS

The *available strength* of connections with concentrated *loads* and within the limits in Table K1.2A shall be taken as the lowest value of the applicable *limit states* shown in Table K1.2.

K2. HSS-TO-HSS TRUSS CONNECTIONS

The *design strength*, ϕP_n, and the *allowable strength*, P_n/Ω, of *connections* shall be determined in accordance with the provisions of this chapter and the provisions of Section B3.6.

HSS-to-HSS truss connections are defined as connections that consist of one or more *branch members* that are directly welded to a continuous chord that passes through the connection and shall be classified as follows:

(a) When the *punching load*, $P_r \sin\theta$, in a branch member is equilibrated by *beam* shear in the *chord member*, the connection shall be classified as a *T-connection* when the branch is perpendicular to the chord, and a *Y-connection* otherwise.
(b) When the punching load, $P_r \sin\theta$, in a branch member is essentially equilibrated (within 20%) by *loads* in other branch member(s) on the same side of the connection, the connection shall be classified as a *K-connection*. The relevant gap is between the primary branch members whose loads equilibrate. An N-connection can be considered as a type of K-connection.

User Note: A K-connection with one branch perpendicular to the chord is often called an N-connection.

(c) When the punching load, $P_r \sin\theta$, is transmitted through the chord member and is equilibrated by branch member(s) on the opposite side, the connection shall be classified as a *cross-connection*.
(d) When a connection has more than two primary branch members, or branch members in more than one plane, the connection shall be classified as a general or multiplanar connection.

When branch members transmit part of their load as K-connections and part of their load as T-, Y- or cross-connections, the adequacy of the connections shall be determined by interpolation on the proportion of the *available strength* of each in total.

TABLE K1.1
Available Strengths of
Plate-to-Round HSS Connections

Connection Type	Connection Available Strength	Plate Bending	
		In-Plane	Out-of-Plane
Transverse Plate T- and Cross-Connections 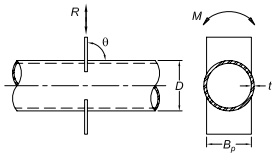	Limit State: HSS Local Yielding Plate Axial Load $R_n \sin\theta = F_y t^2 \left(\frac{5.5}{1 - 0.81\frac{B_p}{D}} \right) Q_f$ (K1-1) $\phi = 0.90$ (LRFD) $\Omega = 1.67$ (ASD)	—	$M_n = 0.5 B_p R_n$
Longitudinal Plate T-, Y- and Cross-Connections 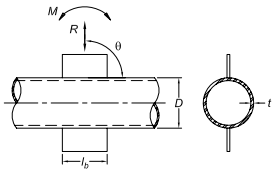	Limit State: HSS Plastification Plate Axial Load $R_n \sin\theta = 5.5 F_y t^2 \left(1 + 0.25\frac{l_b}{D}\right) Q_f$ (K1-2) $\phi = 0.90$ (LRFD) $\Omega = 1.67$ (ASD)	$M_n = 0.8 l_b R_n$	—
Longitudinal Plate T-Connections 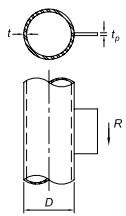	Limit States: Plate Limit States and HSS Punching Shear Plate Shear Load For R_n, see Chapter J. Additionally, the following relationship shall be met: $t_p \le \frac{F_u}{F_{yp}} t$ (K1-3)	—	—
Cap Plate Connections 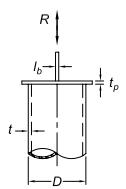	Limit State: Local Yielding of HSS Axial Load $R_n = 2F_y t\left(5t_p + l_b\right) \le F_y A$ (K1-4) $\phi = 1.00$ (LRFD) $\Omega = 1.50$ (ASD)	—	—

FUNCTIONS

$Q_f = 1$ for HSS (connecting surface) in tension

$= 1.0 - 0.3U(1 + U)$ for HSS (connecting surface) in compression (K1-5)

$$U = \left| \frac{P_{ro}}{F_c A_g} + \frac{M_{ro}}{F_c S} \right|$$ (K1-6)

where P_{ro} and M_{ro} are determined on the side of the joint that has the lower compression stress. P_{ro} and M_{ro} refer to required strengths in the HSS.

$P_{ro} = P_u$ for LRFD; P_a for ASD. $M_{ro} = M_u$ for LRFD; M_a for ASD.

TABLE K1.1A
Limits of Applicability of Table K1.1

Plate load angle:	θ	$\geq 30°$	
HSS wall slenderness:	D/t	≤ 50 for T-connections under branch plate axial load or bending	
	D/t	≤ 40 for cross-connections under branch plate axial load or bending	
	D/t	$\leq 0.11E/F_y$ under branch plate shear loading	
	D/t	$\leq 0.11E/F_y$ for cap plate connections in compression	
Width ratio:	0.2	$< B_p/D \leq 1.0$ for transverse branch plate connections	
Material strength:	F_y	≤ 52 ksi (360 MPa)	
Ductility:	F_y/F_u	≤ 0.8	Note: ASTM A500 Grade C is acceptable.

TABLE K1.2
Available Strengths of Plate-to-Rectangular HSS Connections

Connection Type	Connection Available Strength
Transverse Plate T- and Cross-Connections, Under Plate Axial Load 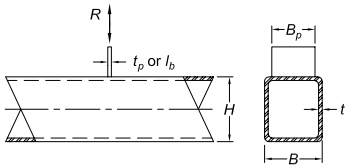 where $\beta = \frac{B_p}{B}$	Limit State: Local Yielding of Plate, For All β $R_n = \frac{10}{B/t} F_y t B_p \leq F_{yp} t_p B_p$ (K1-7) $\phi = 0.95$ (LRFD) $\Omega = 1.58$ (ASD)
	Limit State: HSS Shear Yielding (Punching), When $0.85B \leq B_p \leq B - 2t$ $R_n = 0.6F_y t\left(2t_p + 2B_{ep}\right)$ (K1-8) $\phi = 0.95$ (LRFD) $\Omega = 1.58$ (ASD)
	Limit State: Local Yielding of HSS Sidewalls, When $\beta = 1.0$ $R_n = 2F_y t\left(5k + l_b\right)$ (K1-9) $\phi = 1.00$ (LRFD) $\Omega = 1.50$ (ASD)
	Limit State: Local Crippling of HSS Sidewalls, When $\beta = 1.0$ and Plate is in Compression, for T-Connections $R_n = 1.6t^2\left(1 + \frac{3l_b}{H - 3t}\right)\sqrt{EF_y} Q_f$ (K1-10) $\phi = 0.75$ (LRFD) $\Omega = 2.00$ (ASD)
	Limit State: Local Crippling of HSS Sidewalls, When $\beta = 1.0$ and Plate is in Compression, for Cross-Connections $R_n = \left(\frac{48t^3}{H - 3t}\right)\sqrt{EF_y} Q_f$ (K1-11) $\phi = 0.90$ (LRFD) $\Omega = 1.67$ (ASD)

TABLE K1.2. (continued)
Available Strengths of
Plate-to-Rectangular HSS Connections

Connection Type	Connection Available Strength
Longitudinal Plate T-, Y- and Cross-Connections, Under Plate Axial Load 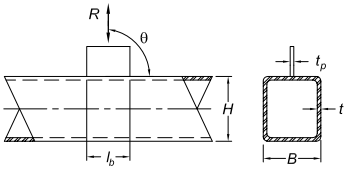	Limit State: HSS Plastification $R_n \sin\theta = \frac{F_y t^2}{1-\frac{t_p}{B}}\left(\frac{2l_b}{B}+4\sqrt{1-\frac{t_p}{B}Q_f}\right)$ (K1-12) $\phi = 1.00$ (LRFD) $\Omega = 1.50$ (ASD)
Longitudinal Through Plate T- and Y-Connections, Under Plate Axial Load 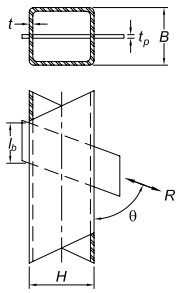	Limit State: HSS Wall Plastification $R_n \sin\theta = \frac{2F_y t^2}{1-\frac{t_p}{B}}\left(\frac{2l_b}{B}+4\sqrt{1-\frac{t_p}{B}Q_f}\right)$ (K1-13) $\phi = 1.00$ (LRFD) $\Omega = 1.50$ (ASD)
Longitudinal Plate T-Connections, Under Plate Shear Load 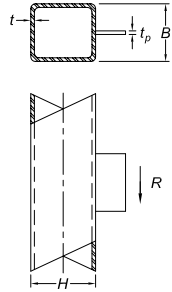	Limit States: Plate Limit States and HSS Punching Shear For R_n, see Chapter J. Additionally, the following relationship shall be met: $t_p \le \frac{F_u}{F_{yp}} t$ (K1-3)

TABLE K1.2 (continued)
Available Strengths of
Plate-to-Rectangular HSS Connections

Connection Type	Connection Available Strength
Cap Plate Connections, under Axial Load 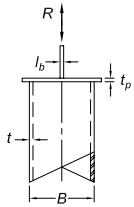	Limit State: Local Yielding of Sidewalls $R_n = 2F_y t\left(5t_p + l_b\right)$, when $\left(5t_p + l_b\right) < B$ (K1-14a) $R_n = F_y \text{A}$, when $\left(5t_p + l_b\right) \geq B$ (K1-14b) ϕ = 1.00 (LRFD) Ω = 1.50 (ASD)
	Limit State: Local Crippling of Sidewalls, When Plate is in Compression $R_n = 1.6t^2\left[1+\frac{6l_b}{B}\left(\frac{t}{t_p}\right)^{1.5}\right]\sqrt{EF_y\frac{t_p}{t}}$, when $\left(5t_p + l_b\right) < B$ (K1-15) ϕ = 0.75 (LRFD) Ω = 2.00 (ASD)

FUNCTIONS

Q_f = 1 for HSS (connecting surface) in tension

$= 1.3 - 0.4\frac{U}{\beta} \leq 1.0$ for HSS (connecting surface) in compression, for transverse plate connections (K1-16)

$= \sqrt{1-U^2}$ for HSS (connecting surface) in compression, for longitudinal plate and longitudinal through plate connections (K1-17)

$U = \left|\frac{P_{ro}}{F_c A_g} + \frac{M_{ro}}{F_c S}\right|$, where P_{ro} and M_{ro} are determined on the side of the joint that has the lower compression stress. P_{ro} and M_{ro} refer to required strengths in the HSS. (K1-6)
$P_{ro} = P_u$ for LRFD; P_a for ASD. $M_{ro} = M_u$ for LRFD; M_a for ASD.

$B_{ep} = \frac{10B_p}{B/t} \leq B_p$ (K1-18)

k = outside corner radius of HSS ≥ 1.5 t

TABLE K1.2A
Limits of Applicability of Table K1.2

Plate load angle:	θ	$\geq 30°$
HSS wall slenderness:	B/t or H/t	≤ 35 for loaded wall, for transverse branch plate connections
	B/t or H/t	≤ 40 for loaded wall, for longitudinal branch plate and through plate connections
	$(B-3t)/t$ or $(H-3t)/t$	$\leq 1.40\sqrt{E/F_y}$ for loaded wall, for branch plate shear loading
Width ratio:	$0.25 \leq B_p/B$	≤ 1.0 for transverse branch plate connections
Material strength:	F_y	≤ 52 ksi (360 MPa)
Ductility:	F_y/F_u	≤ 0.8 Note: ASTM A500 Grade C is acceptable.

For the purposes of this Specification, the centerlines of branch members and chord members shall lie in a common plane. Rectangular HSS connections are further limited to have all members oriented with walls parallel to the plane. For trusses that are made with HSS that are connected by welding branch members to chord members, eccentricities within the limits of applicability are permitted without consideration of the resulting moments for the design of the connection.

1. Definitions of Parameters

A_g = gross cross-sectional area of member, in.^{2} (mm^2)
B = overall width of rectangular *HSS main member*, measured 90° to the plane of the connection, in. (mm)
B_b = overall width of rectangular HSS *branch member*, measured 90° to the plane of the connection, in. (mm)
D = outside diameter of round HSS main member, in. (mm)
D_b = outside diameter of round HSS branch member, in. (mm)
F_c = *available stress* in chord, ksi (MPa)
= F_y for LRFD; $0.60F_y$ for ASD
F_y = *specified minimum yield stress* of HSS main member material, ksi (MPa)
F_{yb} = specified minimum yield stress of HSS branch member material, ksi (MPa)
F_u = *specified minimum tensile strength* of HSS material, ksi (MPa)
H = overall height of rectangular HSS main member, measured in the plane of the connection, in. (mm)
H_b = overall height of rectangular HSS branch member, measured in the plane of the connection, in. (mm)
O_v = $l_{ov}/l_p \times 100$, %
S = elastic section modulus of member, in.^{3} (mm^3)
e = eccentricity in a truss connection, positive being away from the branches, in. (mm)
g = gap between toes of branch members in a gapped K-connection, neglecting the welds, in. (mm)
l_b = $H_b/\sin\theta$, in. (mm)
l_{ov} = overlap length measured along the connecting face of the chord beneath the two branches, in. (mm)

l_p = projected length of the overlapping branch on the chord, in. (mm)
t = *design wall thickness* of HSS main member, in. (mm)
t_b = design wall thickness of HSS branch member, in. (mm)
β = width ratio; the ratio of branch diameter to chord diameter = D_b/D for round HSS; the ratio of overall branch width to chord width = B_b/B for rectangular HSS
β_{eff} = *effective width* ratio; the sum of the perimeters of the two branch members in a K-connection divided by eight times the chord width
γ = chord slenderness ratio; the ratio of one-half the diameter to the wall thickness = $D/2t$ for round HSS; the ratio of one-half the width to wall thickness = $B/2t$ for rectangular HSS
η = *load* length parameter, applicable only to rectangular HSS; the ratio of the length of contact of the branch with the chord in the plane of the connection to the chord width = l_b/B
θ = acute angle between the branch and chord (degrees)
ζ = gap ratio; the ratio of the gap between the branches of a gapped K-connection to the width of the chord = g/B for rectangular HSS

2. Round HSS

The *available strength* of *HSS*-to-HSS truss connections within the limits in Table K2.1A shall be taken as the lowest value of the applicable *limit states* shown in Table K2.1.

3. Rectangular HSS

The *available strength* of *HSS*-to-HSS truss connections within the limits in Table K2.2A shall be taken as the lowest value of the applicable *limit states* shown in Table K2.2.

K3. HSS-TO-HSS MOMENT CONNECTIONS

The *design strength*, ϕM_n, and the *allowable strength*, M_n/Ω, of *connections* shall be determined in accordance with the provisions of this chapter and the provisions of Section B3.6.

HSS-to-HSS *moment connections* are defined as connections that consist of one or two *branch members* that are directly welded to a continuous chord that passes through the connection, with the branch or branches loaded by bending moments.

A connection shall be classified as:

(a) A *T-connection* when there is one branch and it is perpendicular to the chord and as a *Y-connection* when there is one branch but not perpendicular to the chord
(b) A *cross-connection* when there is a branch on each (opposite) side of the chord

For the purposes of this Specification, the centerlines of the branch member(s) and the *chord member* shall lie in a common plane.

TABLE K2.1
Available Strengths of Round HSS-to-HSS Truss Connections

Connection Type	Connection Available Axial Strength
General Check For T-, Y-, Cross- and K-Connections With Gap, When $D_{b(\text{tens/comp})} < (D - 2t)$	Limit State: Shear Yielding (Punching) $P_n = 0.6F_y t \pi D_b \left(\frac{1+\sin\theta}{2\sin^2\theta} \right)$ (K2-1) $\phi = 0.95$ (LRFD) $\Omega = 1.58$ (ASD)
T- and Y-Connections 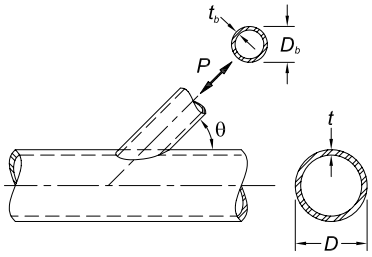	Limit State: Chord Plastification $P_n \sin\theta = F_y t^2 \left(3.1+15.6\beta^2\right)\gamma^{0.2} Q_f$ (K2-2) $\phi = 0.90$ (LRFD) $\Omega = 1.67$ (ASD)
Cross-Connections 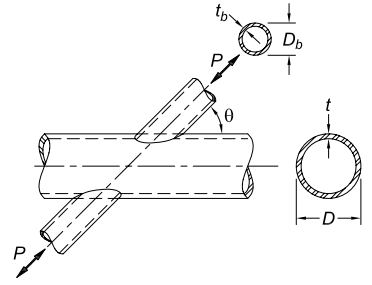	Limit State: Chord Plastification $P_n \sin\theta = F_y t^2 \left(\frac{5.7}{1-0.81\beta} \right) Q_f$ (K2-3) $\phi = 0.90$ (LRFD) $\Omega = 1.67$ (ASD)
K-Connections With Gap or Overlap 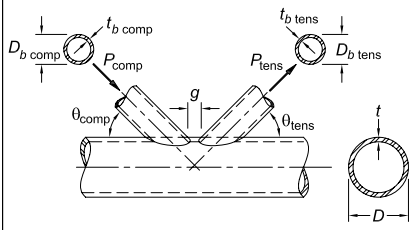	Limit State: Chord Plastification $\left(P_n \sin\theta\right)_{\text{compression branch}} = F_y t^2 \left(2.0 + 11.33 \frac{D_{b\ \text{comp}}}{D} \right) Q_g Q_f$ (K2-4) $\left(P_n \sin\theta\right)_{\text{tension branch}} = \left(P_n \sin\theta\right)_{\text{compression branch}}$ (K2-5) $\phi = 0.90$ (LRFD) $\Omega = 1.67$ (ASD)

TABLE K2.1 (continued)
Available Strengths of Round HSS-to-HSS Truss Connections

FUNCTIONS

$Q_f = 1$ for chord (connecting surface) in tension (K1-5a)

$= 1.0 - 0.3U(1 + U)$ for HSS (connecting surface) in compression (K1-5b)

$$U = \left|\frac{P_{ro}}{F_c A_g} + \frac{M_{ro}}{F_c S}\right|$$

where P_{ro} and M_{ro} are determined on the side of the joint that has the lower compression stress. P_{ro} and M_{ro} refer to required strengths in the HSS. (K1-6)

$P_{ro} = P_u$ for LRFD; P_a for ASD. $M_{ro} = M_u$ for LRFD; M_a for ASD.

$$Q_g = \gamma^{0.2}\left[1 + \frac{0.024\gamma^{1.2}}{\exp\left(\frac{0.5g}{t} - 1.33\right) + 1}\right]^{[a]} \quad \text{(K2-6)}$$

[a] Note that $\exp(x)$ is equal to e^x, where $e = 2.71828$ is the base of the natural logarithm.

TABLE K2.1A
Limits of Applicability of Table K2.1

Joint eccentricity:	-0.55	$\leq e/D \leq 0.25$ for K-connections
Branch angle:	θ	$\geq 30°$
Chord wall slenderness:	D/t	≤ 50 for T-, Y- and K-connections
	D/t	≤ 40 for cross-connections
Branch wall slenderness:	D_b/t_b	≤ 50 for compression branch
	D_b/t_b	$\leq 0.05E/F_{yb}$ for compression branch
Width ratio:	0.2	$< D_b/D \leq 1.0$ for T-, Y-, cross- and overlapped K-connections
	0.4	$\leq D_b/D \leq 1.0$ for gapped K-connections
Gap:	g	$\geq t_{b\ \text{comp}} + t_{b\ \text{tens}}$ for gapped K-connections
Overlap:	25%	$\leq O_v \leq 100\%$ for overlapped K-connections
Branch thickness:	$t_{b\ \text{overlapping}}$	$\leq t_{b\ \text{overlapped}}$ for branches in overlapped K-connections
Material strength:	F_y and F_{yb}	≤ 52 ksi (360 MPa)
Ductility:	F_y/F_u and F_{yb}/F_{ub}	≤ 0.8 Note: ASTM A500 Grade C is acceptable.

TABLE K2.2
Available Strengths of Rectangular HSS-to-HSS Truss Connections

Connection Type	Connection Available Axial Strength
T-, Y- and Cross-Connections 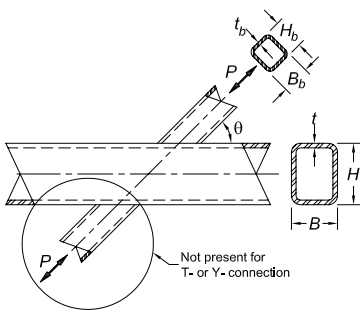	Limit State: Chord Wall Plastification, When $\beta \le 0.85$ $P_n \sin\theta = F_y t^2 \left[\frac{2\eta}{(1-\beta)} + \frac{4}{\sqrt{1-\beta}} \right] Q_f$ (K2-7) $\phi = 1.00$ (LRFD) $\Omega = 1.50$ (ASD)
	Limit State: Shear Yielding (Punching), When $0.85 < \beta \le 1 - 1/\gamma$ or $B/t < 10$ $P_n \sin\theta = 0.6 F_y t B \left(2\eta + 2\beta_{eop} \right)$ (K2-8) $\phi = 0.95$ (LRFD) $\Omega = 1.58$ (ASD)
	Limit State: Local Yielding of Chord Sidewalls, When $\beta = 1.0$ $P_n \sin\theta = 2 F_y t \left(5k + l_b \right)$ (K2-9) $\phi = 1.00$ (LRFD) $\Omega = 1.50$ (ASD)
Case for checking limit state of shear of chord side walls 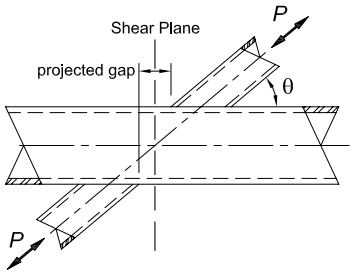	Limit State: Local Crippling of Chord Sidewalls, When $\beta = 1.0$ and Branch is in Compression, for T- or Y-Connections $P_n \sin\theta = 1.6 t^2 \left(1 + \frac{3 l_b}{H - 3t} \right) \sqrt{E F_y} Q_f$ (K2-10) $\phi = 0.75$ (LRFD) $\Omega = 2.00$ (ASD)
	Limit State: Local Crippling of Chord Sidewalls, When $\beta = 1.0$ and Branches are in Compression, for Cross-Connections $P_n \sin\theta = \left(\frac{48 t^3}{H - 3t} \right) \sqrt{E F_y} Q_f$ (K2-11) $\phi = 0.90$ (LRFD) $\Omega = 1.67$ (ASD)
	Limit State: Local Yielding of Branch/Branches Due to Uneven Load Distribution, When $\beta > 0.85$ $P_n = F_{yb} t_b \left(2H_b + 2b_{eoi} - 4t_b \right)$ (K2-12) $\phi = 0.95$ (LRFD) $\Omega = 1.58$ (ASD) where $b_{eoi} = \frac{10}{B/t} \left(\frac{F_y t}{F_{yb} t_b} \right) B_b \le B_b$ (K2-13)

TABLE K2.2 (continued)
Available Strengths of Rectangular HSS-to-HSS Truss Connections

Connection Type	Connection Available Axial Strength
T-, Y- and Cross-Connections	Limit State: Shear of Chord Sidewalls For Cross-Connections With $\theta < 90^\circ$ and Where a Projected Gap is Created (See Figure). Determine $P_n \sin\theta$ in accordance with Section G5.
Gapped K-Connections 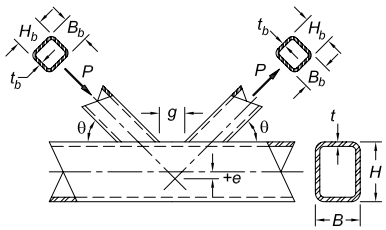 	Limit State: Chord Wall Plastification, for All β $P_n \sin\theta = F_y t^2 \left(9.8\beta_{eff}\gamma^{0.5}\right) Q_f$ (K2-14) $\phi = 0.90$ (LRFD) $\quad \Omega = 1.67$ (ASD)
	Limit State: Shear Yielding (Punching), when $B_b < B - 2t$ Do not check for square branches. $P_n \sin\theta = 0.6 F_y t B \left(2\eta + \beta + \beta_{eop}\right)$ (K2-15) $\phi = 0.95$ (LRFD) $\quad \Omega = 1.58$ (ASD)
	Limit State: Shear of Chord Sidewalls, in the Gap Region Determine $P_n \sin\theta$ in accordance with Section G5. Do not check for square chords.
	Limit State: Local Yielding of Branch/Branches Due to Uneven Load Distribution. Do not check for square branches or if $B/t \geq 15$. $P_n = F_{yb} t_b \left(2H_b + B_b + b_{eoi} - 4t_b\right)$ (K2-16) $\phi = 0.95$ (LRFD) $\quad \Omega = 1.58$ (ASD) where $b_{eoi} = \frac{10}{B/t}\left(\frac{F_y t}{F_{yb} t_b}\right) B_b \leq B_b$ (K2-13)

TABLE K2.2 (continued)
Available Strengths of Rectangular HSS-to-HSS Truss Connections

Connection Type	Connection Available Axial Strength
Overlapped K-Connections 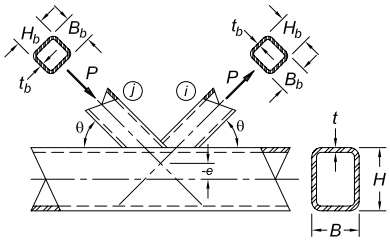 Note that the force arrows shown for overlapped K-connections may be reversed; *i* and *j* control member identification.	Limit State: Local Yielding of Branch/Branches Due to Uneven Load Distribution $\phi = 0.95$ (LRFD) $\quad \Omega = 1.58$ (ASD) When $25\% \le O_v < 50\%$: $P_{n,i} = F_{ybi} t_{bi} \left[\frac{O_v}{50} \left(2H_{bi} - 4t_{bi} \right) + b_{eoi} + b_{eov} \right]$ (K2-17) When $50\% \le O_v < 80\%$: $P_{n,i} = F_{ybi} t_{bi} \left(2H_{bi} - 4t_{bi} + b_{eoi} + b_{eov} \right)$ (K2-18) When $80\% \le O_v < 100\%$: $P_{n,i} = F_{ybi} t_{bi} \left(2H_{bi} - 4t_{bi} + B_{bi} + b_{eov} \right)$ (K2-19) $b_{eoi} = \frac{10}{B/t} \left(\frac{F_y t}{F_{ybi} t_{bi}} \right) B_{bi} \le B_{bi}$ (K2-20) $b_{eov} = \frac{10}{B_{bj}/t_{bj}} \left(\frac{F_{ybj} t_{bj}}{F_{ybi} t_{bi}} \right) B_{bi} \le B_{bi}$ (K2-21) Subscript *i* refers to the overlapping branch Subscript *j* refers to the overlapped branch $P_{n,j} = P_{n,i} \left(\frac{F_{ybj} A_{bj}}{F_{ybi} A_{bi}} \right)$ (K2-22)

FUNCTIONS

$Q_f = 1$ for chord (connecting surface) in tension (K1-5a)

$= 1.3 - 0.4 \frac{U}{\beta} \le 1$ for chord (connecting surface) in compression, for T-, Y- and cross-connections (K1-16)

$= 1.3 - 0.4 \frac{U}{\beta_{eff}} \le 1.0$ for chord (connecting surface) in compression, for gapped K-connections (K2-23)

$U = \left| \frac{P_{ro}}{F_c A_g} + \frac{M_{ro}}{F_c S} \right|$, where P_{ro} and M_{ro} are determined on the side of the joint that has the higher compression stress. P_{ro} and M_{ro} refer to required strengths in the HSS. (K1-6)
$P_{ro} = P_u$ for LRFD; P_a for ASD. $M_{ro} = M_u$ for LRFD; M_a for ASD.

$\beta_{eff} = \left[\left(B_b + H_b \right)_{\text{compression branch}} + \left(B_b + H_b \right)_{\text{tension branch}} \right] / 4B$ (K2-24)

$\beta_{eop} = \frac{5\beta}{\gamma} \le \beta$ (K2-25)

TABLE K2.2A
Limits of Applicability of Table K2.2

Joint eccentricity:	-0.55	$\le e/H \le 0.25$ for K-connections
Branch angle:	θ	$\ge 30°$
Chord wall slenderness:	B/t and H/t	≤ 35 for gapped K-connections and T-, Y- and cross-connections
	B/t	≤ 30 for overlapped K-connections
	H/t	≤ 35 for overlapped K-connections
Branch wall slenderness:	B_b/t_b and H_b/t_b	≤ 35 for tension branch
		$\le 1.25\sqrt{\frac{E}{F_{yb}}}$ for compression branch of gapped K-, T-, Y- and cross-connections
		≤ 35 for compression branch of gapped K-, T-, Y- and cross-connections
		$\le 1.1\sqrt{\frac{E}{F_{yb}}}$ for compression branch of overlapped K-connections
Width ratio:	B_b/B and H_b/B	≥ 0.25 for T-, Y- cross- and overlapped K-connections
Aspect ratio:	0.5	$\le H_b/B_b \le 2.0$ and $0.5 \le H/B \le 2.0$
Overlap:	25%	$\le O_v \le 100\%$ for overlapped K-connections
Branch width ratio:	B_{bi}/B_{bj}	≥ 0.75 for overlapped K-connections, where subscript i refers to the overlapping branch and subscript j refers to the overlapped branch
Branch thickness ratio:	t_{bi}/t_{bj}	≤ 1.0 for overlapped K-connections, where subscript i refers to the overlapping branch and subscript j refers to the overlapped branch
Material strength:	F_y and F_{yb}	≤ 52 ksi (360 MPa)
Ductility:	F_y/F_u and F_{yb}/F_{ub}	≤ 0.8 Note: ASTM A500 Grade C is acceptable.

ADDITIONAL LIMITS FOR GAPPED K-CONNECTIONS

Width ratio:	$\frac{B_b}{B}$ and $\frac{H_b}{B}$	$\ge 0.1+\frac{\gamma}{50}$
	β_{eff}	≥ 0.35
Gap ratio:	$\zeta = g/B$	$\ge 0.5\ (1 - \beta_{eff})$
Gap:	g	$\ge t_{b\ \text{compression branch}} + t_{b\ \text{tension branch}}$
Branch size:	smaller $B_b \ge 0.63$ (larger B_b), if both branches are square	

Note: Maximum gap size will be controlled by the e/H limit. If gap is large, treat as two Y-connections.

1. Definitions of Parameters

A_g = gross cross-sectional area of member, in.^{2} (mm^2)
B = overall width of rectangular *HSS main member*, measured 90 ° to the plane of the connection, in. (mm)
B_b = overall width of rectangular HSS *branch member*, measured 90 ° to the plane of the connection, in. (mm)
D = outside diameter of round HSS main member, in. (mm)
D_b = outside diameter of round HSS branch member, in. (mm)
F_c = *available stress*, ksi (MPa)
= F_y for LRFD; $0.60F_y$ for ASD
F_y = *specified minimum yield stress* of HSS main member material, ksi (MPa)
F_{yb} = specified minimum yield stress of HSS branch member material, ksi (MPa)
F_u = *specified minimum tensile strength* of HSS member material, ksi (MPa)
H = overall height of rectangular HSS main member, measured in the plane of the connection, in. (mm)
H_b = overall height of rectangular HSS branch member, measured in the plane of the connection, in. (mm)
S = elastic section modulus of member, in.^{3} (mm^3)
Z_b = Plastic section modulus of branch about the axis of bending, in.^{3} (mm^3)
t = *design wall thickness* of HSS main member, in. (mm)
t_b = design wall thickness of HSS branch member, in. (mm)
β = width ratio
= D_b/D for round HSS; ratio of branch diameter to chord diameter
= B_b/B for rectangular HSS; ratio of overall branch width to chord width
γ = chord slenderness ratio
= $D/2t$ for round HSS; ratio of one-half the diameter to the wall thickness
= $B/2t$ for rectangular HSS; ratio of one-half the width to the wall thickness
η = *load* length parameter, applicable only to rectangular HSS
= l_b/B; the ratio of the length of contact of the branch with the chord in the plane of the connection to the chord width, where $l_b=H_b/\sin\theta$
θ = acute angle between the branch and chord (degrees)

2. Round HSS

The *available strength* of moment connections within the limits of Table K3.1A shall be taken as the lowest value of the applicable *limit states* shown in Table K3.1.

3. Rectangular HSS

The *available strength* of moment connections within the limits of Table K3.2A shall be taken as the lowest value of the applicable *limit states* shown in Table K3.2.

K4. WELDS OF PLATES AND BRANCHES TO RECTANGULAR HSS

The *design strength*, ϕR_n, ϕM_n and ϕP_n, and the *allowable strength*, R_n/Ω, M_n/Ω and P_n/Ω, of *connections* shall be determined in accordance with the provisions of this chapter and the provisions of Section B3.6.

TABLE K3.1
Available Strengths of Round HSS-to-HSS Moment Connections

Connection Type	Connection Available Flexural Strength
Branch(es) under In-Plane Bending T-, Y- and Cross-Connections 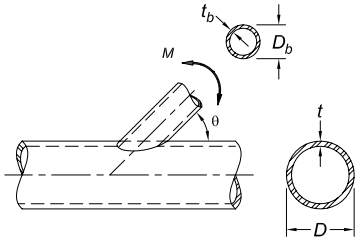 	Limit State: Chord Plastification $M_n \sin\theta = 5.39 F_y t^2 \gamma^{0.5} \beta D_b Q_f$ (K3-1) $\phi = 0.90$ (LRFD) $\Omega = 1.67$ (ASD)
	Limit State: Shear Yielding (Punching), When $D_b < (D - 2t)$ $M_n = 0.6 F_y t D_b^2 \left(\frac{1 + 3\sin\theta}{4\sin^2\theta} \right)$ (K3-2) $\phi = 0.95$ (LRFD) $\Omega = 1.58$ (ASD)
Branch(es) under Out-of-Plane Bending T-, Y- and Cross-Connections 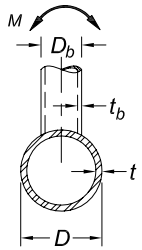 	Limit State: Chord Plastification $M_n \sin\theta = F_y t^2 D_b \left(\frac{3.0}{1 - 0.81\beta} \right) Q_f$ (K3-3) $\phi = 0.90$ (LRFD) $\Omega = 1.67$ (ASD)
	Limit State: Shear Yielding (Punching), When $D_b < (D - 2t)$ $M_n = 0.6 F_y t D_b^2 \left(\frac{3 + \sin\theta}{4\sin^2\theta} \right)$ (K3-4) $\phi = 0.95$ (LRFD) $\Omega = 1.58$ (ASD)

For T-, Y- and cross-connections, with branch(es) under combined axial load, in-plane bending and out-of-plane bending, or any combination of these load effects:

$$\frac{P_r}{P_c} + \left(\frac{M_{r-ip}}{M_{c-ip}} \right)^2 + \left(\frac{M_{r-op}}{M_{c-op}} \right) \le 1.0 \quad \text{(K3-5)}$$

$M_{c\text{-}ip}$ = ϕM_n = design flexural strength for in-plane bending from Table K3.1, kip-in. (N-mm)
= M_n/Ω = allowable flexural strength for in-plane bending from Table K3.1, kip-in. (N-mm)
$M_{c\text{-}op}$ = ϕM_n = design flexural strength for out-of-plane bending from Table K3.1, kip-in. (N-mm)
= M_n/Ω = allowable flexural strength for out-of-plane bending from Table K3.1, kip-in. (N-mm)
$M_{r\text{-}ip}$ = required flexural strength for in-plane bending, using LRFD or ASD load combinations, as applicable, kip-in. (N-mm)
$M_{r\text{-}op}$ = required flexural strength for out-of-plane bending, using LRFD or ASD load combinations, as applicable, kip-in. (N-mm)
P_c = ϕP_n = design axial strength from Table K2.1, kips (N)
= P_n/Ω = allowable axial strength from Table K2.1, kips (N)
P_r = required axial strength using LRFD or ASD load combinations, as applicable, kips (N)

TABLE K3.1. (continued)
Available Strengths of Round HSS-to-HSS Moment Connections

FUNCTIONS

$Q_f = 1$ for chord (connecting surface) in tension

$= 1.0 - 0.3U(1 + U)$ for HSS (connecting surface) in compression (K1-5)

$$U = \left| \frac{P_{ro}}{F_c A_g} + \frac{M_{ro}}{F_c S} \right|$$ (K1-6)

where P_{ro} and M_{ro} are determined on the side of the joint that has the lower compression stress. P_{ro} and M_{ro} refer to required strengths in the HSS.
$P_{ro} = P_u$ for LRFD; P_a for ASD. $M_{ro} = M_u$ for LRFD; M_a for ASD.

TABLE K3.1A
Limits of Applicability of Table K3.1

Branch angle:	θ	$\geq 30°$
Chord wall slenderness:	D/t	≤ 50 for T- and Y-connections
	D/t	≤ 40 for cross-connections
Branch wall slenderness:	D_b/t_b	≤ 50
	D_b/t_b	$\leq 0.05E/F_{yb}$
Width ratio:	0.2	$< D_b/D \leq 1.0$
Material strength:	F_y and F_{yb}	≤ 52 ksi (360 MPa)
Ductility:	F_y/F_u and F_{yb}/F_{ub}	≤ 0.8 Note: ASTM A500 Grade C is acceptable.

TABLE K3.2.
Available Strengths of Rectangular HSS-to-HSS Moment Connections

Connection Type	Connection Available Flexural Strength
Branch(es) under In-Plane Bending T- and Cross-Connections 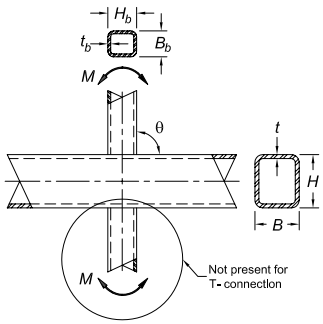	Limit State: Chord Wall Plastification, When $\beta \le 0.85$ $M_n = F_y t^2 H_b \left[\frac{1}{2\eta} + \frac{2}{\sqrt{1-\beta}} + \frac{\eta}{(1-\beta)} \right] Q_f$ (K3-6) $\phi = 1.00$ (LRFD) $\Omega = 1.50$ (ASD)
	Limit State: Sidewall Local Yielding, When $\beta > 0.85$ $M_n = 0.5\, F_y^* t (H_b + 5t)^2$ (K3-7) $\phi = 1.00$ (LRFD) $\Omega = 1.50$ (ASD)
	Limit State: Local Yielding of Branch/Branches Due to Uneven Load Distribution, When $\beta > 0.85$ $M_n = F_{yb} \left[Z_b - \left(1 - \frac{b_{eoi}}{B_b} \right) B_b H_b t_b \right]$ (K3-8) $\phi = 0.95$ (LRFD) $\Omega = 1.58$ (ASD)
Branch(es) under Out-of-Plane Bending T- and Cross-Connections 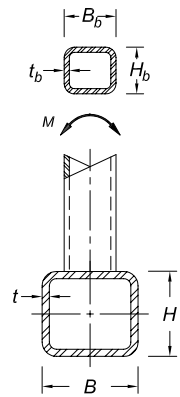	Limit State: Chord Wall Plastification, When $\beta \le 0.85$ $M_n = F_y t^2 \left[\frac{0.5 H_b (1+\beta)}{(1-\beta)} + \sqrt{\frac{2 B B_b (1+\beta)}{(1-\beta)}} \right] Q_f$ (K3-9) $\phi = 1.00$ (LRFD) $\Omega = 1.50$ (ASD)
	Limit State: Sidewall Local Yielding, When $\beta > 0.85$ $M_n = F_y^* t (B - t)(H_b + 5t)$ (K3-10) $\phi = 1.00$ (LRFD) $\Omega = 1.50$ (ASD)
	Limit State: Local Yielding of Branch/Branches Due to Uneven Load Distribution, When $\beta > 0.85$ $M_n = F_{yb} \left[Z_b - 0.5 \left(1 - \frac{b_{eoi}}{B_b} \right)^2 B_b^2 t_b \right]$ (K3-11) $\phi = 0.95$ (LRFD) $\Omega = 1.58$ (ASD)

TABLE K3.2 (continued)
Available Strengths of Rectangular HSS-to-HSS Moment Connections

Connection Type	Connection Available Flexural Strength
Branch(es) under Out-of-Plane Bending T- and Cross-Connections (continued)	Limit State: Chord Distortional Failure, for T-Connections and Unbalanced Cross-Connections $M_n = 2F_y t\left[H_b t + \sqrt{BHt(B+H)}\right]$ (K3-12) $\phi = 1.00$ (LRFD) $\quad \Omega = 1.50$ (ASD)

For T- and cross-connections, with branch(es) under combined axial load, in-plane bending and out-of-plane bending, or any combination of these load effects:

$$\frac{P_r}{P_c} + \left(\frac{M_{r\text{-}ip}}{M_{c\text{-}ip}}\right) + \left(\frac{M_{r\text{-}op}}{M_{c\text{-}op}}\right) \le 1.0 \quad \text{(K3-13)}$$

$M_{c\text{-}ip}$ = ϕM_n = design flexural strength for in-plane bending from Table K3.2, kip-in. (N-mm)
= M_n/Ω = allowable flexural strength for in-plane bending from Table K3.2, kip-in. (N-mm)
$M_{c\text{-}op}$ = ϕM_n = design flexural strength for out-of-plane bending from Table K3.2, kip-in. (N-mm)
= M_n/Ω = allowable flexural strength for out-of-plane bending from Table K3.2, kip-in. (N-mm)
$M_{r\text{-}ip}$ = required flexural strength for in-plane bending, using LRFD or ASD load combinations, as applicable, kip-in. (N-mm)
$M_{r\text{-}op}$ = required flexural strength for out-of-plane bending, using LRFD or ASD load combinations, as applicable, kip-in. (N-mm)
P_c = ϕP_n = design axial strength from Table K2.2, kips (N)
= P_n/Ω = allowable axial strength from Table K2.2, kips (N)
P_r = required axial strength using LRFD or ASD load combinations, as applicable, kips (N)

FUNCTIONS

Q_f = 1 for chord (connecting surface) in tension (K1-15)

$$= 1.3 - 0.4\frac{U}{\beta} \le 1.0 \quad \text{for chord (connecting surface) in compression} \quad \text{(K1-16)}$$

$$U = \left|\frac{P_{ro}}{F_c A_g} + \frac{M_{ro}}{F_c S}\right|, \quad \text{(K1-6)}$$

where P_{ro} and M_{ro} are determined on the side of the joint that has the lower compression stress. P_{ro} and M_{ro} refer to required strengths in the HSS.
$P_{ro} = P_u$ for LRFD; P_a for ASD. $M_{ro} = M_u$ for LRFD; M_a for ASD.

F_y^* = F_y for T-connections and = $0.8F_y$ for cross-connections

$$b_{eoi} = \frac{10}{B/t}\left(\frac{F_y t}{F_{yb} t_b}\right) B_b \le B_b \quad \text{(K2-13)}$$

TABLE K3.2A
Limits of Applicability of Table K3.2

Branch angle:	θ	$\cong 90°$
Chord wall slenderness:	B/t and H/t	≤ 35
Branch wall slenderness:	B_b/t_b and H_b/t_b	≤ 35
		$\leq 1.25\sqrt{\frac{E}{F_{yb}}}$
Width ratio:	B_b/B	≥ 0.25
Aspect ratio:	0.5	$\leq H_b/B_b \leq 2.0$ and $0.5 \leq H/B \leq 2.0$
Material strength:	F_y and F_{yb}	≤ 52 ksi (360 MPa)
Ductility:	F_y/F_u and F_{yb}/F_{ub}	≤ 0.8 Note: ASTM A500 Grade C is acceptable.

The available strength of branch connections shall be determined for the limit state of nonuniformity of load transfer along the line of weld, due to differences in relative *stiffness* of *HSS* walls in HSS-to-HSS connections and between elements in transverse plate-to-HSS connections, as follows:

$$R_n \text{ or } P_n = F_{nw} t_w l_e \quad \text{(K4-1)}$$

$$M_{n\text{-}ip} = F_{nw} S_{ip} \quad \text{(K4-2)}$$

$$M_{n\text{-}op} = F_{nw} S_{op} \quad \text{(K4-3)}$$

For interaction, see Equation K3-13.

(a) For *fillet welds*

$$\phi = 0.75 \text{ (LRFD)} \qquad \Omega = 2.00 \text{ (ASD)}$$

(b) For *partial-joint-penetration groove welds*

$$\phi = 0.80 \text{ (LRFD)} \qquad \Omega = 1.88 \text{ (ASD)}$$

where

F_{nw} = nominal *stress* of *weld metal* (Chapter J) with no increase in strength due to directionality of load, ksi (MPa)

S_{ip} = effective elastic section modulus of welds for in-plane bending (Table K4.1), in.^{3} (mm^3)

S_{op} = effective elastic section modulus of welds for out-of-plane bending (Table K4.1), in.^{3} (mm^3)

l_e = total effective weld length of groove and fillet welds to rectangular HSS for weld strength calculations, in. (mm)

t_w = smallest effective weld throat around the perimeter of branch or plate, in. (mm)

TABLE K4.1
Effective Weld Properties for Connections to Rectangular HSS

Connection Type	Connection Weld Strength
Transverse Plate T- and Cross-Connections Under Plate Axial Load 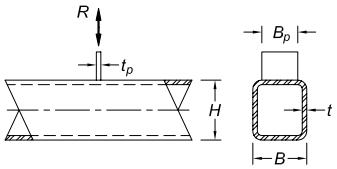	Effective Weld Properties $$I_e = 2\left(\frac{10}{B/t}\right)\left(\frac{F_y t}{F_{yp} t_p}\right) B_p \le 2B_p \quad \text{(K4-4)}$$ where I_e = total effective weld length for welds on both sides of the transverse plate
T-, Y- and Cross-Connections Under Branch Axial Load or Bending 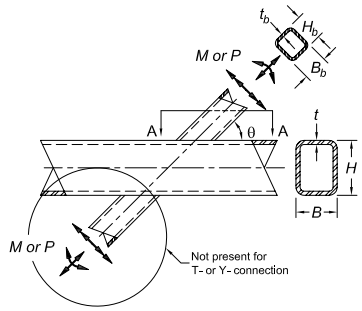 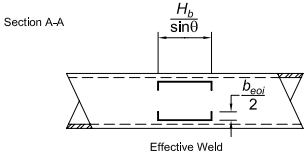	Effective Weld Properties $$I_e = \frac{2H_b}{\sin\theta} + 2b_{eoi} \quad \text{(K4-5)}$$ $$S_{ip} = \frac{t_w}{3}\left(\frac{H_b}{\sin\theta}\right)^2 + t_w b_{eoi}\left(\frac{H_b}{\sin\theta}\right) \quad \text{(K4-6)}$$ $$S_{op} = t_w\left(\frac{H_b}{\sin\theta}\right)B_b + \frac{t_w}{3}\left(B_b^2\right) - \frac{\left(t_w/3\right)\left(B_b - b_{eoi}\right)^3}{B_b} \quad \text{(K4-7)}$$ $$b_{eoi} = \frac{10}{B/t}\left(\frac{F_y t}{F_{yb} t_b}\right) B_b \le B_b \quad \text{(K2-13)}$$ When $\beta > 0.85$ or $\theta > 50°$, $b_{eoi}/2$ shall not exceed $2t$.
Gapped K-Connections Under Branch Axial Load 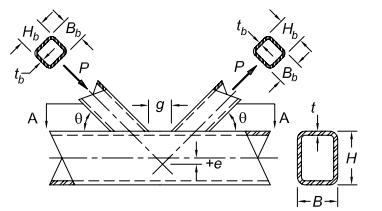 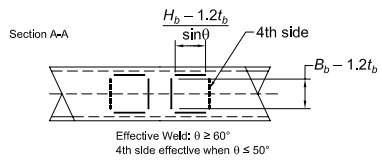	Effective Weld Properties When $\theta \le 50°$: $$I_e = \frac{2\left(H_b - 1.2t_b\right)}{\sin\theta} + 2\left(B_b - 1.2t_b\right) \quad \text{(K4-8)}$$ When $\theta \ge 60°$: $$I_e = \frac{2\left(H_b - 1.2t_b\right)}{\sin\theta} + \left(B_b - 1.2t_b\right) \quad \text{(K4-9)}$$ When $50° < \theta < 60°$, linear interpolation shall be used to determine I_e.

TABLE K4.1 (continued)
Effective Weld Properties for Connections to Rectangular HSS

Connection Type	Connection Weld Strength
Overlapped K-Connections under Branch Axial Load	Overlapping Member Effective Weld Properties (all dimensions are for the overlapping branch, *i*)
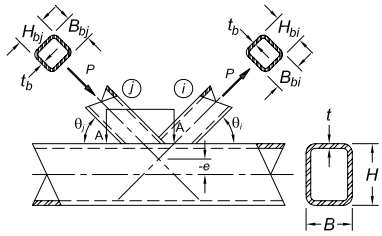	When 25% ≤ O_v < 50%: $$I_{e,i}=\frac{2O_v}{50}\left[\left(1-\frac{O_v}{100}\right)\left(\frac{H_{bi}}{\sin\theta_i}\right)+\frac{O_v}{100}\left(\frac{H_{bi}}{\sin(\theta_i+\theta_j)}\right)\right]+b_{eoi}+b_{eov}$$ (K4-10)
Note that the force arrows shown for overlapped K-connections may be reversed; *i* and *j* control member identification	When 50% ≤ O_v < 80%: $$I_{e,i}=2\left[\left(1-\frac{O_v}{100}\right)\left(\frac{H_{bi}}{\sin\theta_i}\right)+\frac{O_v}{100}\left(\frac{H_{bi}}{\sin(\theta_i+\theta_j)}\right)\right]+b_{eoi}+b_{eov}$$ (K4-11)
	When 80% ≤ O_v ≤ 100%: $$I_{e,i}=2\left[\left(1-\frac{O_v}{100}\right)\left(\frac{H_{bi}}{\sin\theta_i}\right)+\frac{O_v}{100}\left(\frac{H_{bi}}{\sin(\theta_i+\theta_j)}\right)\right]+B_{bi}+b_{eov}$$ (K4-12)
Section A-A 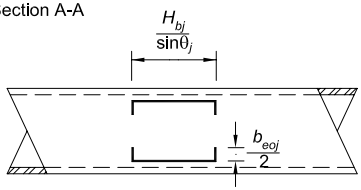 Effective Weld: Eq. K4-13 When $\frac{B_{bi}}{B}\le 0.85$ and $\theta_j \le 50°$	$$b_{eoi}=\frac{10}{B/t}\left(\frac{F_y t}{F_{ybi}t_{bi}}\right)B_{bi}\le B_{bi}$$ (K2-20)
	$$b_{eov}=\frac{10}{B_{bj}/t_{bj}}\left(\frac{F_{ybj}t_{bj}}{F_{ybi}t_{bi}}\right)B_{bi}\le B_{bi}$$ (K2-21)
	when B_{bi}/B_b > 0.85 or θ_i > 50°, $b_{eoi}/2$ shall not exceed 2*t* and when B_{bi}/B_{bj} > 0.85 or (180 − θ_i − θ_j) > 50°, $b_{eov}/2$ shall not exceed $2t_{bj}$
	Subscript *i* refers to the overlapping branch Subscript *j* refers to the overlapped branch
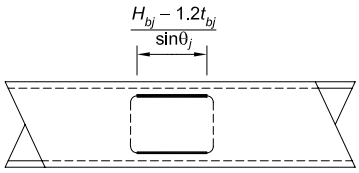 Effective Weld: When $\frac{B_{bi}}{B}$ > 0.85 or θ_j > 50°	$$l_{e,j}=\frac{2H_{bj}}{\sin\theta_j}+2b_{eoj}$$ (K4-13)
	$$b_{eoj}=\frac{10}{B/t}\left(\frac{F_y t}{F_{ybj}t_{bj}}\right)B_{bj}\le B_{bj}$$ (K4-14)
	When B_{bj}/B > 0.85 or θ_j > 50°, $l_{e,j}$ = 2 (H_{bj} − 1.2t_{bj})/sinθ_j

When an overlapped K-connection has been designed in accordance with Table K2.2 of this chapter, and the *branch member* component forces normal to the chord are 80% "balanced" (i.e., the branch member forces normal to the chord face differ by no more than 20%), the "hidden" weld under an overlapping branch may be omitted if the remaining welds to the overlapped branch everywhere develop the full capacity of the overlapped branch member walls.

The weld checks in Table K4.1 are not required if the welds are capable of developing the full strength of the branch member wall along its entire perimeter (or a plate along its entire length).

User Note: The approach used here to allow down-sizing of welds assumes a constant weld size around the full perimeter of the HSS branch. Special attention is required for equal width (or near-equal width) connections which combine partial-joint-penetration groove welds along the matched edges of the connection, with fillet welds generally across the *main member* face.

CHAPTER L
DESIGN FOR SERVICEABILITY

This chapter addresses serviceability design requirements.

The chapter is organized as follows:

L1. General Provisions
L2. Camber
L3. Deflections
L4. Drift
L5. Vibration
L6. Wind-Induced Motion
L7. Expansion and Contraction
L8. Connection Slip

L1. GENERAL PROVISIONS

Serviceability is a state in which the function of a building, its appearance, maintainability, durability and comfort of its occupants are preserved under normal usage. Limiting values of structural behavior for serviceability (such as maximum deflections and accelerations) shall be chosen with due regard to the intended function of the structure. Serviceability shall be evaluated using appropriate *load combination*s for the *serviceability limit states* identified.

User Note: Serviceability limit states, *service loads*, and appropriate *load combination*s for *serviceability* requirements can be found in ASCE/SEI 7, Appendix C and Commentary to Appendix C. The performance requirements for serviceability in this chapter are consistent with those requirements. Service loads, as stipulated herein, are those that act on the structure at an arbitrary point in time and are not usually taken as the *nominal loads*.

L2. CAMBER

Where *camber* is used to achieve proper position and location of the structure, the magnitude, direction and location of camber shall be specified in the structural drawings.

L3. DEFLECTIONS

Deflections in structural members and *structural systems* under appropriate *service load combinations* shall not impair the *serviceability* of the structure.

User Note: Conditions to be considered include levelness of floors, alignment of structural members, integrity of building finishes, and other factors that affect the normal usage and function of the structure. For *composite* members, the additional deflections due to the shrinkage and creep of the concrete should be considered.

L4. DRIFT

Drift of a structure shall be evaluated under *service loads* to provide for *serviceability* of the structure, including the integrity of interior partitions and exterior *cladding*. Drift under strength *load combination*s shall not cause collision with adjacent structures or exceed the limiting values of such drifts that may be specified by the *applicable building code*.

L5. VIBRATION

The effect of vibration on the comfort of the occupants and the function of the structure shall be considered. The sources of vibration to be considered include pedestrian loading, vibrating machinery and others identified for the structure.

L6. WIND-INDUCED MOTION

The effect of wind-induced motion of buildings on the comfort of occupants shall be considered.

L7. EXPANSION AND CONTRACTION

The effects of thermal expansion and contraction of a building shall be considered. Damage to building *cladding* can cause water penetration and may lead to corrosion.

L8. CONNECTION SLIP

The effects of *connection slip* shall be included in the design where slip at bolted connections may cause deformations that impair the *serviceability* of the structure. Where appropriate, the connection shall be designed to preclude slip.

User Note: For the design of *slip-critical connections*, see Sections J3.8 and J3.9. For more information on connection slip, refer to the RCSC *Specification for Structural Joints Using High-Strength Bolts*.

CHAPTER M
FABRICATION AND ERECTION

This chapter addresses requirements for shop drawings, fabrication, shop painting and erection.

The chapter is organized as follows:

M1. Shop and Erection Drawings
M2. Fabrication
M3. Shop Painting
M4. Erection

M1. SHOP AND ERECTION DRAWINGS

Shop and erection drawings are permitted to be prepared in stages. Shop drawings shall be prepared in advance of fabrication and give complete information necessary for the fabrication of the component parts of the structure, including the location, type and size of welds and bolts. Erection drawings shall be prepared in advance of erection and give information necessary for erection of the structure. Shop and erection drawings shall clearly distinguish between shop and field welds and bolts and shall clearly identify pretensioned and slip-critical high-strength bolted *connections*. Shop and erection drawings shall be made with due regard to speed and economy in fabrication and erection.

M2. FABRICATION

1. Cambering, Curving and Straightening

Local application of heat or mechanical means is permitted to be used to introduce or correct camber, curvature and straightness. The temperature of heated areas shall not exceed 1,100 °F (593 °C) for ASTM A514/A514M and ASTM A852/A852M steel nor 1,200 °F (649 °C) for other steels.

2. Thermal Cutting

Thermally cut edges shall meet the requirements of AWS D1.1/D1.1M, subclauses 5.15.1.2, 5.15.4.3 and 5.15.4.4 with the exception that thermally cut free edges that will not be subject to *fatigue* shall be free of round-bottom *gouges* greater than $^3/_{16}$ in. (5 mm) deep and sharp V-shaped notches. Gouges deeper than $^3/_{16}$ in. (5 mm) and notches shall be removed by grinding or repaired by welding.

Reentrant corners shall be formed with a curved transition. The radius need not exceed that required to fit the connection. The surface resulting from two straight torch cuts meeting at a point is not considered to be curved. Discontinuous corners are permitted where the material on both sides of the discontinuous reentrant corner are connected to a mating piece to prevent deformation and associated *stress concentration* at the corner.

User Note: Reentrant corners with a radius of 1/2 to 3/8 in. (13 to 10 mm) are acceptable for *statically loaded* work. Where pieces need to fit tightly together, a discontinuous reentrant corner is acceptable if the pieces are connected close to the corner on both sides of the discontinuous corner. Slots in *HSS* for gussets may be made with semicircular ends or with curved corners. Square ends are acceptable provided the edge of the gusset is welded to the HSS.

Weld access holes shall meet the geometrical requirements of Section J1.6. *Beam copes* and weld access holes in shapes that are to be galvanized shall be ground to bright metal. For shapes with a flange thickness not exceeding 2 in. (50 mm), the roughness of thermally cut surfaces of copes shall be no greater than a surface roughness value of 2,000 μin. (50 μm) as defined in ASME B46.1. For beam copes and weld access holes in which the curved part of the access hole is thermally cut in ASTM A6/A6M hot-rolled shapes with a flange thickness exceeding 2 in. (50 mm) and welded *built-up shapes* with material thickness greater than 2 in. (50 mm), a preheat temperature of not less than 150 °F (66 °C) shall be applied prior to thermal cutting. The thermally cut surface of access holes in ASTM A6/A6M hot-rolled shapes with a flange thickness exceeding 2 in. (50 mm) and built-up shapes with a material thickness greater than 2 in. (50 mm) shall be ground.

User Note: The AWS Surface Roughness Guide for Oxygen Cutting (AWS C4.1-77) sample 2 may be used as a guide for evaluating the surface roughness of copes in shapes with flanges not exceeding 2 in. (50 mm) thick.

3. Planing of Edges

Planing or finishing of sheared or *thermally cut* edges of plates or shapes is not required unless specifically called for in the *construction documents* or included in a stipulated edge preparation for welding.

4. Welded Construction

The technique of welding, the workmanship, appearance, and quality of welds, and the methods used in correcting nonconforming work shall be in accordance with AWS D1.1/D1.1M except as modified in Section J2.

5. Bolted Construction

Parts of bolted members shall be pinned or bolted and rigidly held together during assembly. Use of a *drift* pin in bolt holes during assembly shall not distort the metal or enlarge the holes. Poor matching of holes shall be cause for rejection.

Bolt holes shall comply with the provisions of the RCSC *Specification for Structural Joints Using High-Strength Bolts*, hereafter referred to as the RCSC *Specification*, Section 3.3 except that *thermally cut* holes are permitted with a surface roughness profile not exceeding 1,000 μin. (25 μm) as defined in ASME B46.1. *Gouges* shall not exceed a depth of 1/16 in. (2 mm). Water jet cut holes are also permitted.

User Note: The AWS Surface Roughness Guide for Oxygen Cutting (AWS C4.1-77) sample 3 may be used as a guide for evaluating the surface roughness of thermally cut holes.

Fully inserted finger *shims*, with a total thickness of not more than $^1/_4$ in. (6 mm) within a *joint*, are permitted without changing the strength (based upon hole type) for the design of *connections*. The orientation of such shims is independent of the direction of application of the *load*.

The use of high-strength bolts shall conform to the requirements of the RCSC *Specification*, except as modified in Section J3.

6. Compression Joints

Compression *joints* that depend on contact *bearing* as part of the *splice* strength shall have the bearing surfaces of individual fabricated pieces prepared by milling, sawing or other suitable means.

7. Dimensional Tolerances

Dimensional tolerances shall be in accordance with Chapter 6 of the AISC *Code of Standard Practice for Steel Buildings and Bridges*, hereafter referred to as the *Code of Standard Practice*.

8. Finish of Column Bases

Column bases and base plates shall be finished in accordance with the following requirements:

(1) Steel bearing plates 2 in. (50 mm) or less in thickness are permitted without milling provided a satisfactory contact bearing is obtained. Steel bearing plates over 2 in. (50 mm) but not over 4 in. (100 mm) in thickness are permitted to be straightened by pressing or, if presses are not available, by milling for bearing surfaces, except as noted in subparagraphs 2 and 3 of this section, to obtain a satisfactory contact bearing. Steel bearing plates over 4 in. (100 mm) in thickness shall be milled for bearing surfaces, except as noted in subparagraphs 2 and 3 of this section.
(2) Bottom surfaces of bearing plates and column bases that are grouted to ensure full bearing contact on foundations need not be milled.
(3) Top surfaces of bearing plates need not be milled when *complete-joint-penetration groove welds* are provided between the column and the bearing plate.

9. Holes for Anchor Rods

Holes for anchor rods are permitted to be *thermally cut* in accordance with the provisions of Section M2.2.

10. Drain Holes

When water can collect inside *HSS* or box members, either during construction or during service, the member shall be sealed, provided with a drain hole at the base, or protected by other suitable means.

11. Requirements for Galvanized Members

Members and parts to be galvanized shall be designed, detailed and fabricated to provide for flow and drainage of pickling fluids and zinc and to prevent pressure buildup in enclosed parts.

User Note: See *The Design of Products to be Hot-Dip Galvanized After Fabrication*, American Galvanizer's Association, and ASTM A123, A153, A384 and A780 for useful information on design and detailing of galvanized members. See Section M2.2 for requirements for *copes* of members to be galvanized.

M3. SHOP PAINTING

1. General Requirements

Shop painting and surface preparation shall be in accordance with the provisions in Chapter 6 of the *Code of Standard Practice*.

Shop paint is not required unless specified by the contract documents.

2. Inaccessible Surfaces

Except for contact surfaces, surfaces inaccessible after shop assembly shall be cleaned and painted prior to assembly, if required by the *construction documents*.

3. Contact Surfaces

Paint is permitted in *bearing-type connections*. For *slip-critical connections*, the *faying surface* requirements shall be in accordance with the RCSC *Specification*, Section 3.2.2(b).

4. Finished Surfaces

Machine-finished surfaces shall be protected against corrosion by a rust inhibitive coating that can be removed prior to erection, or which has characteristics that make removal prior to erection unnecessary.

5. Surfaces Adjacent to Field Welds

Unless otherwise specified in the design documents, surfaces within 2 in. (50 mm) of any field weld location shall be free of materials that would prevent proper welding or produce objectionable fumes during welding.

M4. ERECTION

1. Column Base Setting

Column bases shall be set level and to correct elevation with full bearing on concrete or masonry as defined in Chapter 7 of the *Code of Standard Practice*.

2. Stability and Connections

The frame of *structural steel* buildings shall be carried up true and plumb within the limits defined in Chapter 7 of the *Code of Standard Practice*. As erection progresses, the structure shall be secured to support dead, erection and other *loads* anticipated to occur during the period of erection. Temporary *bracing* shall be provided, in accordance with the requirements of the *Code of Standard Practice*, wherever necessary to support the loads to which the structure may be subjected, including equipment and the operation of same. Such bracing shall be left in place as long as required for safety.

3. Alignment

No permanent bolting or welding shall be performed until the adjacent affected portions of the structure have been properly aligned.

4. Fit of Column Compression Joints and Base Plates

Lack of contact bearing not exceeding a gap of $^1/_{16}$ in. (2 mm), regardless of the type of *splice* used (*partial-joint-penetration groove welded* or bolted), is permitted. If the gap exceeds $^1/_{16}$ in. (2 mm), but is equal to or less than $^1/_4$ in. (6 mm), and if an engineering investigation shows that sufficient contact area does not exist, the gap shall be packed out with nontapered steel *shims*. Shims need not be other than mild steel, regardless of the grade of the main material.

5. Field Welding

Surfaces in and adjacent to *joints* to be field welded shall be prepared as necessary to assure weld quality. This preparation shall include surface preparation necessary to correct for damage or contamination occurring subsequent to fabrication.

6. Field Painting

Responsibility for touch-up painting, cleaning and field painting shall be allocated in accordance with accepted local practices, and this allocation shall be set forth explicitly in the contract documents.

CHAPTER N

QUALITY CONTROL AND QUALITY ASSURANCE

This chapter addresses minimum requirements for *quality control*, *quality assurance* and *nondestructive testing* for *structural steel* systems and steel elements of composite members for buildings and other structures.

User Note: This chapter does not address quality control or quality assurance for concrete reinforcing bars, concrete materials or placement of concrete for composite members. This chapter does not address quality control or quality assurance for surface preparation or coatings.

User Note: The inspection of steel (open-web) joists and joist girders, tanks, pressure vessels, cables, cold-formed steel products, or gage metal products is not addressed in this Specification.

The Chapter is organized as follows:

N1. Scope
N2. Fabricator and Erector Quality Control Program
N3. Fabricator and Erector Documents
N4. Inspection and Nondestructive Testing Personnel
N5. Minimum Requirements for Inspection of Structural Steel Buildings
N6. Minimum Requirements for Inspection of Composite Construction
N7. Approved Fabricators and Erectors
N8. Nonconforming Material and Workmanship

N1. SCOPE

Quality control (QC) as specified in this chapter shall be provided by the fabricator and erector. *Quality assurance* (QA) as specified in this chapter shall be provided by others when required by the *authority having jurisdiction* (*AHJ*), *applicable building code (ABC)*, purchaser, owner, or *engineer of record* (*EOR*). *Nondestructive testing* (NDT) shall be performed by the agency or firm responsible for quality assurance, except as permitted in accordance with Section N7.

User Note: The QA/QC requirements in Chapter N are considered adequate and effective for most steel structures and are strongly encouraged without modification. When the ABC and AHJ requires the use of a *quality assurance plan*, this chapter outlines the minimum requirements deemed effective to provide satisfactory results in steel building construction. There may be cases where supplemental inspections are advisable. Additionally, where the contractor's *quality control program* has demonstrated the capability to perform some tasks this plan has assigned to quality assurance, modification of the plan could be considered.

User Note: The producers of materials manufactured in accordance with standard *specifications* referenced in Section A3 in this Specification, and steel deck manufacturers, are not considered to be fabricators or erectors.

N2. FABRICATOR AND ERECTOR QUALITY CONTROL PROGRAM

The fabricator and erector shall establish and maintain *quality control* procedures and perform inspections to ensure that their work is performed in accordance with this Specification and the *construction documents*.

Material identification procedures shall comply with the requirements of Section 6.1 of the *Code of Standard Practice*, and shall be monitored by the fabricator's *quality control inspector* (QCI).

The fabricator's QCI shall inspect the following as a minimum, as applicable:

(1) Shop welding, high-strength bolting, and details in accordance with Section N5
(2) Shop cut and *finished surfaces* in accordance with Section M2
(3) Shop heating for straightening, cambering and curving in accordance with Section M2.1
(4) Tolerances for shop fabrication in accordance with Section 6 of the *Code of Standard Practice*

The erector's QCI shall inspect the following as a minimum, as applicable:

(1) Field welding, high-strength bolting, and details in accordance with Section N5
(2) Steel deck and headed steel stud anchor placement and attachment in accordance with Section N6
(3) Field cut surfaces in accordance with Section M2.2
(4) Field heating for straightening in accordance with Section M2.1
(5) Tolerances for field erection in accordance with Section 7.13 of the *Code of Standard Practice*.

N3. FABRICATOR AND ERECTOR DOCUMENTS

1. Submittals for Steel Construction

The fabricator or erector shall submit the following documents for review by the *engineer of record* (EOR) or the EOR's designee, in accordance with Section 4 or A4.4 of the *Code of Standard Practice*, prior to fabrication or erection, as applicable:

(1) Shop drawings, unless shop drawings have been furnished by others
(2) Erection drawings, unless erection drawings have been furnished by others

2. Available Documents for Steel Construction

The following documents shall be available in electronic or printed form for review by the EOR or the EOR's designee prior to fabrication or erection, as applicable, unless otherwise required in the contract documents to be submitted:

(1) For main *structural steel* elements, copies of material test reports in accordance with Section A3.1.
(2) For steel castings and forgings, copies of material test reports in accordance with Section A3.2.
(3) For *fasteners*, copies of manufacturer's certifications in accordance with Section A3.3.
(4) For deck fasteners, copies of manufacturer's product data sheets or catalog data. The data sheets shall describe the product, limitations of use, and recommended or typical installation instructions.
(5) For anchor rods and threaded rods, copies of material test reports in accordance with Section A3.4.
(6) For welding consumables, copies of manufacturer's certifications in accordance with Section A3.5.
(7) For headed stud anchors, copies of manufacturer's certifications in accordance with Section A3.6.
(8) Manufacturer's product data sheets or catalog data for welding *filler metals* and fluxes to be used. The data sheets shall describe the product, limitations of use, recommended or typical welding parameters, and storage and exposure requirements, including baking, if applicable.
(9) Welding procedure specifications (WPSs).
(10) Procedure qualification records (PQRs) for WPSs that are not prequalified in accordance with AWS D1.1/D1.1M or AWS D1.3/D1.3M, as applicable.
(11) Welding personnel performance qualification records (WPQR) and continuity records.
(12) Fabricator's or erector's, as applicable, written quality control manual that shall include, as a minimum:

(i) Material control procedures
(ii) Inspection procedures
(iii) Nonconformance procedures

(13) Fabricator's or erector's, as applicable, QC inspector qualifications.

N4. INSPECTION AND NONDESTRUCTIVE TESTING PERSONNEL

1. Quality Control Inspector Qualifications

Quality control (QC) welding inspection personnel shall be qualified to the satisfaction of the fabricator's or erector's QC program, as applicable, and in accordance with either of the following:

(a) Associate welding inspectors (AWI) or higher as defined in AWS B5.1, *Standard for the Qualification of Welding Inspectors*, or
(b) Qualified under the provisions of AWS D1.1/D1.1M subclause 6.1.4

QC bolting inspection personnel shall be qualified on the basis of documented training and experience in structural bolting inspection.

2. Quality Assurance Inspector Qualifications

Quality assurance (QA) welding inspectors shall be qualified to the satisfaction of the QA agency's written practice, and in accordance with either of the following:

(a) Welding inspectors (WIs) or senior welding inspectors (SWIs), as defined in AWS B5.1, *Standard for the Qualification of Welding Inspectors*, except associate welding inspectors (AWIs) are permitted to be used under the direct supervision of WIs, who are on the premises and available when weld inspection is being conducted, or
(b) Qualified under the provisions of AWS D1.1/D1.1M, subclause 6.1.4

QA bolting inspection personnel shall be qualified on the basis of documented training and experience in structural bolting inspection.

3. NDT Personnel Qualifications

Nondestructive testing personnel, for NDT other than visual, shall be qualified in accordance with their employer's written practice, which shall meet or exceed the criteria of AWS D1.1/D1.1M *Structural Welding Code—Steel,* subclause 6.14.6, and:

(a) American Society for Nondestructive Testing (ASNT) SNT-TC-1A*, Recommended Practice for the Qualification and Certification of Nondestructive Testing Personnel*, or
(b) ASNT CP-189, *Standard for the Qualification and Certification of Nondestructive Testing Personnel*.

N5. MINIMUM REQUIREMENTS FOR INSPECTION OF STRUCTURAL STEEL BUILDINGS

1. Quality Control

QC inspection tasks shall be performed by the fabricator's or erector's *quality control inspector* (QCI), as applicable, in accordance with Sections N5.4, N5.6 and N5.7.

Tasks in Tables N5.4-1 through N5.4-3 and Tables N5.6-1 through N5.6-3 listed for QC are those inspections performed by the QCI to ensure that the work is performed in accordance with the *construction documents*.

For QC inspection, the applicable construction documents are the *shop drawings* and the *erection drawings,* and the applicable referenced *specifications*, codes and standards.

User Note: The QCI need not refer to the *design drawings* and project specifications. The *Code of Standard Practice*, Section 4.2(a), requires the transfer of information from the Contract Documents (design drawings and project specification) into accurate and complete shop and erection drawings, allowing QC inspection to be based upon shop and erection drawings alone.

2. Quality Assurance

Quality assurance (QA) inspection of fabricated items shall be made at the fabricator's plant. The *quality assurance inspector* (QAI) shall schedule this work to minimize interruption to the work of the fabricator.

QA inspection of the erected steel system shall be made at the project site. The QAI shall schedule this work to minimize interruption to the work of the erector.

The QAI shall review the material test reports and certifications as listed in Section N3.2 for compliance with the *construction documents*.

QA inspection tasks shall be performed by the QAI, in accordance with Sections N5.4, N5.6 and N5.7.

Tasks in Tables N5.4-1 through N5.4-3 and N5.6-1 through N5.6-3 listed for QA are those inspections performed by the QAI to ensure that the work is performed in accordance with the construction documents.

Concurrent with the submittal of such reports to the AHJ, EOR or owner, the QA agency shall submit to the fabricator and erector:

(1) Inspection reports
(2) *Nondestructive testing* reports

3. Coordinated Inspection

Where a task is noted to be performed by both QC and QA, it is permitted to coordinate the inspection function between the QCI and QAI so that the inspection functions are performed by only one party. Where QA relies upon inspection functions performed by QC, the approval of the *engineer of record* and the *authority having jurisdiction* is required.

4. Inspection of Welding

Observation of welding operations and visual inspection of in-process and completed welds shall be the primary method to confirm that the materials, procedures and workmanship are in conformance with the *construction documents*. For *structural steel*, all provisions of AWS D1.1/D1.1M *Structural Welding Code—Steel* for *statically loaded* structures shall apply.

User Note: Section J2 of this Specification contains exceptions to AWS D1.1/D1.1M.

As a minimum, welding inspection tasks shall be in accordance with Tables N5.4-1, N5.4-2 and N5.4-3. In these tables, the inspection tasks are as follows:

O – Observe these items on a random basis. Operations need not be delayed pending these inspections.

P – Perform these tasks for each welded *joint* or member.

TABLE N5.4-1
Inspection Tasks Prior to Welding

Inspection Tasks Prior to Welding	QC	QA
Welding procedure specifications (WPSs) available	P	P
Manufacturer certifications for welding consumables available	P	P
Material identification (type/grade)	O	O
Welder identification system[1]	O	O
Fit-up of groove welds (including joint geometry) • Joint preparation • Dimensions (alignment, root opening, root face, bevel) • Cleanliness (condition of steel surfaces) • Tacking (tack weld quality and location) • Backing type and fit (if applicable)	O	O
Configuration and finish of access holes	O	O
Fit-up of fillet welds • Dimensions (alignment, gaps at root) • Cleanliness (condition of steel surfaces) • Tacking (tack weld quality and location)	O	O
Check welding equipment	O	—

[1] The fabricator or erector, as applicable, shall maintain a system by which a welder who has welded a joint or member can be identified. Stamps, if used, shall be the low-stress type.

TABLE N5.4-2
Inspection Tasks During Welding

Inspection Tasks During Welding	QC	QA
Use of qualified welders	O	O
Control and handling of welding consumables • Packaging • Exposure control	O	O
No welding over cracked tack welds	O	O
Environmental conditions • Wind speed within limits • Precipitation and temperature	O	O
WPS followed • Settings on welding equipment • Travel speed • Selected welding materials • Shielding gas type/flow rate • Preheat applied • Interpass temperature maintained (min./max.) • Proper position (F, V, H, OH)	O	O
Welding techniques • Interpass and final cleaning • Each pass within profile limitations • Each pass meets quality requirements	O	O

TABLE N5.4-3
Inspection Tasks After Welding

Inspection Tasks After Welding	QC	QA
Welds cleaned	O	O
Size, length and location of welds	P	P
Welds meet visual acceptance criteria • Crack prohibition • Weld/base-metal fusion • Crater cross section • Weld profiles • Weld size • Undercut • Porosity	P	P
Arc strikes	P	P
k-area[1]	P	P
Backing removed and weld tabs removed (if required)	P	P
Repair activities	P	P
Document acceptance or rejection of welded joint or member	P	P

[1] When welding of doubler plates, continuity plates or stiffeners has been performed in the *k*-area, visually inspect the web *k*-area for cracks within 3 in. (75 mm) of the weld.

5. Nondestructive Testing of Welded Joints

5a. Procedures

Ultrasonic testing (UT), magnetic particle testing (MT), penetrant testing (PT) and radiographic testing (RT), where required, shall be performed by QA in accordance with AWS D1.1/D1.1M. Acceptance criteria shall be in accordance with AWS D1.1/D1.1M for *statically loaded* structures, unless otherwise designated in the *design drawings* or project *specifications*.

5b. CJP Groove Weld NDT

For structures in Risk Category III or IV of Table 1.5-1, Risk Category of Buildings and Other Structures for Flood, Wind, Snow, Earthquake and Ice Loads, of ASCE/SEI 7, *Minimum Design Loads for Buildings and Other Structures*, UT shall be performed by QA on all CJP groove welds subject to transversely applied tension loading in butt, T- and corner joints, in materials $^5/_{16}$ in. (8 mm) thick or greater. For structures in Risk Category II, UT shall be performed by QA on 10% of CJP groove welds in butt, T- and corner joints subject to transversely applied tension loading, in materials $^5/_{16}$ in. (8 mm) thick or greater.

User Note: For structures in Risk Category I, NDT of CJP groove welds is not required. For all structures in all Risk Categories, NDT of CJP groove welds in materials less than $^5/_{16}$ in. (8 mm) thick is not required.

5c. Access Hole NDT

Thermally cut surfaces of access holes shall be tested by QA using MT or PT, when the flange thickness exceeds 2 in. (50 mm) for rolled shapes, or when the web thickness exceeds 2 in. (50 mm) for *built-up shapes*. Any crack shall be deemed unacceptable regardless of size or location.

User Note: See Section M2.2.

5d. Welded Joints Subjected to Fatigue

When required by Appendix 3, Table A-3.1, welded joints requiring weld soundness to be established by radiographic or ultrasonic inspection shall be tested by QA as prescribed. Reduction in the rate of UT is prohibited.

5e. Reduction of Rate of Ultrasonic Testing

The rate of UT is permitted to be reduced if approved by the EOR and the AHJ. Where the initial rate for UT is 100%, the NDT rate for an individual welder or welding operator is permitted to be reduced to 25%, provided the reject rate, the number of welds containing unacceptable defects divided by the number of welds completed, is demonstrated to be 5% or less of the welds tested for the welder or welding operator. A sampling of at least 40 completed welds for a job shall be made for such reduction evaluation. For evaluating the reject rate of continuous welds over 3 ft (1 m) in length where the effective throat is 1 in. (25 mm) or less, each 12 in. (300 mm) increment or fraction thereof shall be considered as one weld. For evaluating the reject rate on continuous welds over 3 ft (1 m) in length where the effective throat is greater than 1 in. (25 mm), each 6 in. (150 mm) of length or fraction thereof shall be considered one weld.

5f. Increase in Rate of Ultrasonic Testing

For structures in Risk Category II, where the initial rate for UT is 10%, the NDT rate for an individual welder or welding operator shall be increased to 100% should the reject rate, the number of welds containing unacceptable defects divided by the number of welds completed, exceeds 5% of the welds tested for the welder or welding operator. A sampling of at least 20 completed welds for a job shall be made prior to implementing such an increase. When the reject rate for the welder or welding operator, after a sampling of at least 40 completed welds, has fallen to 5% or less, the rate of UT shall be returned to 10%. For evaluating the reject rate of continuous welds over 3 ft (1 m) in length where the effective throat is 1 in. (25 mm) or less,

each 12-in. (300 mm) increment or fraction thereof shall be considered as one weld. For evaluating the reject rate on continuous welds over 3 ft (1 m) in length where the effective throat is greater than 1 in. (25 mm), each 6 in. (150 mm) of length or fraction thereof shall be considered one weld.

5g. Documentation

All NDT performed shall be documented. For shop fabrication, the NDT report shall identify the tested weld by piece mark and location in the piece. For field work, the NDT report shall identify the tested weld by location in the structure, piece mark, and location in the piece.

When a weld is rejected on the basis of NDT, the NDT record shall indicate the location of the defect and the basis of rejection.

6. Inspection of High-Strength Bolting

Observation of bolting operations shall be the primary method used to confirm that the materials, procedures and workmanship incorporated in construction are in conformance with the *construction documents* and the provisions of the RCSC *Specification*.

(1) For snug-tight joints, pre-installation verification testing as specified in Table N5.6-1 and monitoring of the installation procedures as specified in Table N5.6-2 are not applicable. The QCI and QAI need not be present during the installation of *fasteners* in snug-tight joints.
(2) For *pretensioned joints* and slip-critical joints, when the installer is using the *turn-of-nut method* with matchmarking techniques, the direct-tension-indicator method, or the twist-off-type tension control bolt method, monitoring of bolt pretensioning procedures shall be as specified in Table N5.6-2. The QCI and QAI need not be present during the installation of fasteners when these methods are used by the installer.
(3) For pretensioned joints and slip-critical joints, when the installer is using the calibrated wrench method or the turn-of-nut method without matchmarking, monitoring of bolt pretensioning procedures shall be as specified in Table N5.6-2. The QCI and QAI shall be engaged in their assigned inspection duties during installation of fasteners when these methods are used by the installer.

As a minimum, bolting inspection tasks shall be in accordance with Tables N5.6-1, N5.6-2 and N5.6-3. In these tables, the inspection tasks are as follows:

O – Observe these items on a random basis. Operations need not be delayed pending these inspections.

P – Perform these tasks for each bolted connection.

TABLE N5.6-1
Inspection Tasks Prior to Bolting

Inspection Tasks Prior to Bolting	QC	QA
Manufacturer's certifications available for fastener materials	O	P
Fasteners marked in accordance with ASTM requirements	O	O
Proper fasteners selected for the joint detail (grade, type, bolt length if threads are to be excluded from shear plane)	O	O
Proper bolting procedure selected for joint detail	O	O
Connecting elements, including the appropriate faying surface condition and hole preparation, if specified, meet applicable requirements	O	O
Pre-installation verification testing by installation personnel observed and documented for fastener assemblies and methods used	P	O
Proper storage provided for bolts, nuts, washers and other fastener components	O	O

TABLE N5.6-2
Inspection Tasks During Bolting

Inspection Tasks During Bolting	QC	QA
Fastener assemblies, of suitable condition, placed in all holes and washers (if required) are positioned as required	O	O
Joint brought to the snug-tight condition prior to the pretensioning operation	O	O
Fastener component not turned by the wrench prevented from rotating	O	O
Fasteners are pretensioned in accordance with the RCSC *Specification*, progressing systematically from the most rigid point toward the free edges	O	O

TABLE N5.6-3
Inspection Tasks After Bolting

Inspection Tasks After Bolting	QC	QA
Document acceptance or rejection of bolted connections	P	P

7. Other Inspection Tasks

The fabricator's QCI shall inspect the fabricated steel to verify compliance with the details shown on the shop drawings, such as proper application of *joint* details at each connection. The erector's QCI shall inspect the erected steel frame to verify compliance with the details shown on the erection drawings, such as braces, *stiffeners*, member locations and proper application of joint details at each connection.

The QAI shall be on the premises for inspection during the placement of anchor rods and other embedments supporting structural steel for compliance with the *construction documents*. As a minimum, the diameter, grade, type and length of the anchor rod or embedded item, and the extent or depth of embedment into the concrete, shall be verified prior to placement of concrete.

The QAI shall inspect the fabricated steel or erected steel frame, as appropriate, to verify compliance with the details shown on the construction documents, such as braces, stiffeners, member locations and proper application of joint details at each connection.

N6. MINIMUM REQUIREMENTS FOR INSPECTION OF COMPOSITE CONSTRUCTION

Inspection of structural steel and steel deck used in composite construction shall comply with the requirements of this Chapter.

For welding of steel headed stud anchors, the provisions of AWS D1.1/D1.1M, *Structural Welding Code—Steel,* apply.

For welding of steel deck, observation of welding operations and visual inspection of in-process and completed welds shall be the primary method to confirm that the materials, procedures and workmanship are in conformance with the *construction documents*. All applicable provisions of AWS D1.3/D1.3M, *Structural Welding Code—Sheet Steel,* shall apply. Deck welding inspection shall include verification of the welding consumables, welding procedure *specifications* and qualifications of welding personnel prior to the start of the work, observations of the work in progress, and a visual inspection of all completed welds. For steel deck attached by fastening systems other than welding, inspection shall include verification of the *fasteners* to be used prior to the start of the work, observations of the work in progress to confirm installation in conformance with the manufacturer's recommendations, and a visual inspection of the completed installation.

For those items for *quality control* (QC) in Table N6.1 that contain an observe designation, the QC inspection shall be performed by the erector's *quality control inspector* (QCI). In Table N6.1, the inspection tasks are as follows:

O – Observe these items on a random basis. Operations need not be delayed pending these inspections.

P – Perform these tasks for each steel element.

TABLE N6.1
Inspection of Steel Elements of Composite Construction Prior to Concrete Placement

Inspection of Steel Elements of Composite Construction Prior to Concrete Placement	QC	QA
Placement and installation of steel deck	P	P
Placement and installation of steel headed stud anchors	P	P
Document acceptance or rejection of steel elements	P	P

N7. APPROVED FABRICATORS AND ERECTORS

Quality assurance (QA) inspections, except *nondestructive testing* (NDT), may be waived when the work is performed in a fabricating shop or by an erector approved by the *authority having jurisdiction* (AHJ) to perform the work without QA. NDT of welds completed in an approved fabricator's shop may be performed by that fabricator when approved by the AHJ. When the fabricator performs the NDT, the QA agency shall review the fabricator's NDT reports.

At completion of fabrication, the approved fabricator shall submit a certificate of compliance to the AHJ stating that the materials supplied and work performed by the fabricator are in accordance with the *construction documents*. At completion of erection, the approved erector shall submit a certificate of compliance to the AHJ stating that the materials supplied and work performed by the erector are in accordance with the construction documents.

N8. NONCONFORMING MATERIAL AND WORKMANSHIP

Identification and rejection of material or workmanship that is not in conformance with the *construction documents* shall be permitted at any time during the progress of the work. However, this provision shall not relieve the owner or the inspector of the obligation for timely, in-sequence inspections. Nonconforming material and workmanship shall be brought to the immediate attention of the fabricator or erector, as applicable.

Nonconforming material or workmanship shall be brought into conformance, or made suitable for its intended purpose as determined by the *engineer of record*.

Concurrent with the submittal of such reports to the AHJ, EOR or owner, the QA agency shall submit to the fabricator and erector:

(1) Nonconformance reports
(2) Reports of repair, replacement or acceptance of nonconforming items

APPENDIX 1

DESIGN BY INELASTIC ANALYSIS

This appendix addresses design by *inelastic analysis*, in which consideration of the redistribution of member and connection forces and moments as a result of localized yielding is permitted.

The appendix is organized as follows:

1.1. General Requirements
1.2. Ductility Requirements
1.3. Analysis Requirements

1.1. GENERAL REQUIREMENTS

Design by *inelastic analysis* shall be conducted in accordance with Section B3.3, using *load and resistance factor design* (LRFD). The *design strength* of the *structural system* and its members and connections shall equal or exceed the *required strength* as determined by the inelastic analysis. The provisions of this Appendix do not apply to seismic design.

The inelastic analysis shall take into account: (1) flexural, shear and axial member deformations, and all other component and *connection* deformations that contribute to the displacements of the structure; (2) *second-order effects* (including P-Δ and P-δ *effects*); (3) geometric imperfections; (4) *stiffness* reductions due to inelasticity, including the effect of residual *stresses* and partial yielding of the cross section; and (5) uncertainty in system, member, and connection strength and stiffness.

Strength limit states detected by an inelastic analysis that incorporates all of the above requirements are not subject to the corresponding provisions of the Specification when a comparable or higher level of reliability is provided by the analysis. Strength limit states not detected by the inelastic analysis shall be evaluated using the corresponding provisions of Chapters D, E, F, G, H, I, J and K.

Connections shall meet the requirements of Section B3.6.

Members and connections subject to inelastic deformations shall be shown to have adequate ductility consistent with the intended behavior of the structural system. Force redistribution due to rupture of a member or connection is not permitted.

Any method that uses inelastic analysis to proportion members and connections to satisfy these general requirements is permitted. A design method based on inelastic analysis that meets the above strength requirements, the ductility requirements of Section 1.2, and the analysis requirements of Section 1.3 satisfies these general requirements.

1.2. DUCTILITY REQUIREMENTS

Members and connections with elements subject to yielding shall be proportioned such that all inelastic deformation demands are less than or equal to their inelastic deformation capacities. In lieu of explicitly ensuring that the inelastic deformation demands are less than or equal to their inelastic deformation capacities, the following requirements shall be satisfied for steel members subject to plastic hinging.

1. Material

The *specified minimum yield stress*, F_y, of members subject to plastic hinging shall not exceed 65 ksi (450 MPa).

2. Cross Section

The cross section of members at *plastic hinge* locations shall be doubly symmetric with width-to-thickness ratios of their compression elements not exceeding λ_{pd}, where λ_{pd} is equal to λ_p from Table B4.1b except as modified below:

(a) For the width-to-thickness ratio, h/t_w, of webs of I-shaped sections, rectangular *HSS*, and box-shaped sections subject to combined flexure and compression

(i) When $P_u/\phi_c P_y \le 0.125$

$$\lambda_{pd} = 3.76\sqrt{\frac{E}{F_y}}\left(1-\frac{2.75P_u}{\phi_c P_y}\right) \qquad \text{(A-1-1)}$$

(ii) When $P_u/\phi_c P_y > 0.125$

$$\lambda_{pd} = 1.12\sqrt{\frac{E}{F_y}}\left(2.33-\frac{P_u}{\phi_c P_y}\right) \ge 1.49\sqrt{\frac{E}{F_y}} \qquad \text{(A-1-2)}$$

where

h = as defined in Section B4.1, in. (mm)
t_w = web thickness, in. (mm)
P_u = *required axial strength* in compression, kips (N)
$P_y = F_y A_g$ = axial *yield strength*, kips (N)
ϕ_c = *resistance factor* for compression = 0.90

(b) For the width-to-thickness ratio, b/t, of flanges of rectangular HSS and box-shaped sections, and for flange *cover plates*, and *diaphragm plates* between lines of *fasteners* or welds

$$\lambda_{pd} = 0.94\sqrt{E/F_y} \qquad \text{(A-1-3)}$$

where

b = as defined in Section B4.1, in. (mm)
t = as defined in Section B4.1, in. (mm)

(c) For the diameter-to-thickness ratio, D/t, of circular HSS in flexure

$$\lambda_{pd} = 0.045E/F_y \tag{A-1-4}$$

where

D = outside diameter of round HSS, in. (mm)

3. Unbraced Length

In prismatic member segments that contain *plastic hinges*, the laterally *unbraced length, L_b,* shall not exceed L_{pd}, determined as follows. For members subject to flexure only, or to flexure and axial tension, L_b shall be taken as the length between points braced against lateral displacement of the compression flange, or between points braced to prevent twist of the cross section. For members subject to flexure and axial compression, L_b shall be taken as the length between points braced against both lateral displacement in the minor axis direction and twist of the cross section.

(a) For I-shaped members bent about their major axis:

$$L_{pd} = \left[0.12 - 0.076\frac{M_1'}{M_2}\right]\frac{E}{F_y}r_y \tag{A-1-5}$$

where

r_y = radius of gyration about minor axis, in. (mm)

(i) When the magnitude of the bending moment at any location within the unbraced length exceeds M_2

$$M_1'/M_2 = +1 \tag{A-1-6a}$$

Otherwise:

(ii) When $M_{mid} \le (M_1 + M_2)/2$

$$M_1' = M_1 \tag{A-1-6b}$$

(iii) When $M_{mid} > (M_1 + M_2)/2$

$$M_1' = 2M_{mid} - M_2 < M_2 \tag{A-1-6c}$$

where

M_1 = smaller moment at end of unbraced length, kip-in. (N-mm)

M_2 = larger moment at end of unbraced length, kip-in. (N-mm). M_2 shall be taken as positive in all cases.

M_{mid} = moment at middle of unbraced length, kip-in. (N-mm)

M_1' = effective moment at end of unbraced length opposite from M_2, kip-in. (N-mm)

The moments M_1 and M_{mid} are individually taken as positive when they cause compression in the same flange as the moment M_2 and negative otherwise.

(b) For solid rectangular bars and for rectangular *HSS* and box-shaped members bent about their major axis

$$L_{pd} = \left[0.17 - 0.10 \frac{M_1'}{M_2} \right] \frac{E}{F_y} r_y \geq 0.10 \frac{E}{F_y} r_y \qquad \text{(A-1-7)}$$

For all types of members subject to axial compression and containing plastic hinges, the laterally unbraced lengths about the cross section major and minor axes shall not exceed $4.71 r_x \sqrt{E/F_y}$ and $4.71 r_y \sqrt{E/F_y}$, respectively.

There is no L_{pd} limit for member segments containing plastic hinges in the following cases:

(1) Members with circular or square cross sections subject only to flexure or to combined flexure and tension
(2) Members subject only to flexure about their minor axis or combined tension and flexure about their minor axis
(3) Members subject only to tension

4. Axial Force

To assure adequate ductility in compression members with *plastic hinges*, the *design strength* in compression shall not exceed $0.75 F_y A_g$.

1.3. ANALYSIS REQUIREMENTS

The *structural analysis* shall satisfy the general requirements of Section 1.1. These requirements are permitted to be satisfied by a second-order *inelastic analysis* meeting the requirements of this Section.

Exception:
For continuous *beams* not subject to axial compression, a first-order inelastic or *plastic analysis* is permitted and the requirements of Sections 1.3.2 and 1.3.3 are waived.

User Note: Refer to the Commentary for guidance in conducting a traditional plastic analysis and design in conformance with these provisions.

1. Material Properties and Yield Criteria

The *specified minimum yield stress*, F_y, and the *stiffness* of all steel members and connections shall be reduced by a factor of 0.90 for the analysis, except as noted below in Section 1.3.3.

The influence of axial force, major axis bending moment, and minor axis bending moment shall be included in the calculation of the inelastic response.

The plastic strength of the member cross section shall be represented in the analysis either by an elastic-perfectly-plastic yield criterion expressed in terms of the axial

force, major axis bending moment, and minor axis bending moment, or by explicit modeling of the material *stress*-strain response as elastic-perfectly-plastic.

2. Geometric Imperfections

The analysis shall include the effects of initial geometric imperfections. This shall be done by explicitly modeling the imperfections as specified in Section C2.2a or by the application of equivalent *notional loads* as specified in Section C2.2b.

3. Residual Stress and Partial Yielding Effects

The analysis shall include the influence of residual *stresses* and partial yielding. This shall be done by explicitly modeling these effects in the analysis or by reducing the *stiffness* of all *structural components* as specified in Section C2.3.

If the provisions of Section C2.3 are used, then:

(1) The 0.9 stiffness reduction factor specified in Section 1.3.1 shall be replaced by the reduction of the elastic modulus E by 0.8 as specified in Section C2.3, and
(2) The elastic-perfectly-plastic yield criterion, expressed in terms of the axial force, major axis bending moment, and minor axis bending moment, shall satisfy the cross section strength limit defined by Equations H1-1a and H1-1b using $P_c = 0.9P_y$, $M_{cx} = 0.9M_{px}$ and $M_{cy} = 0.9M_{py}$.

APPENDIX 2

DESIGN FOR PONDING

This appendix provides methods for determining whether a roof system has adequate strength and *stiffness* to resist *ponding*.

The appendix is organized as follows:

2.1. Simplified Design for Ponding
2.2. Improved Design for Ponding

2.1. SIMPLIFIED DESIGN FOR PONDING

The roof system shall be considered stable for *ponding* and no further investigation is needed if both of the following two conditions are met:

$$C_p + 0.9C_s \le 0.25 \tag{A-2-1}$$

$$I_d \ge 25(S^4)10^{-6} \tag{A-2-2}$$

$$\text{(S.I.: } I_d \ge 3\ 940\ S^4\text{)} \tag{A-2-2M}$$

where

$$C_p = \frac{32L_sL_p^4}{10^7 I_p} \tag{A-2-3}$$

$$C_p = \frac{504L_sL_p^4}{I_p} \text{ (S.I.)} \tag{A-2-3M}$$

$$C_s = \frac{32SL_s^4}{10^7 I_s} \tag{A-2-4}$$

$$C_s = \frac{504SL_s^4}{I_s} \text{ (S.I.)} \tag{A-2-4M}$$

I_d = moment of inertia of the steel deck supported on secondary members, in.^{4} per ft (mm^4 per m)
I_p = moment of inertia of primary members, in.^{4} (mm^4)
I_s = moment of inertia of secondary members, in.^{4} (mm^4)
L_p = length of primary members, ft (m)
L_s = length of secondary members, ft (m)
S = spacing of secondary members, ft (m)

For trusses and steel joists, the calculation of the moments of inertia, I_p and I_s, shall include the effects of web member strain when used in the above equation.

User Note: When the moment of inertia is calculated using only the truss or joist chord areas, the reduction in the moment of inertia due to web strain can typically be taken as 15%.

A steel deck shall be considered a secondary member when it is directly supported by the primary members.

2.2. IMPROVED DESIGN FOR PONDING

The provisions given below are to be used when a more accurate evaluation of framing *stiffness* is needed than that given by Equations A-2-1 and A-2-2.

Define the *stress* indexes

$$U_p = \left(\frac{0.8F_y - f_o}{f_o} \right)_p \quad \text{for the primary member} \tag{A-2-5}$$

$$U_s = \left(\frac{0.8F_y - f_o}{f_o} \right)_s \quad \text{for the secondary member} \tag{A-2-6}$$

where

f_o = stress due to $D + R$ (D = nominal dead *load*, R = *nominal load* due to rainwater or snow exclusive of the *ponding* contribution), ksi (MPa)

For roof framing consisting of primary and secondary members, evaluate the combined stiffness as follows. Enter Figure A-2.1 at the level of the computed stress index, U_p, determined for the primary *beam*; move horizontally to the computed C_s value of the secondary beams and then downward to the abscissa scale. The combined stiffness of the primary and secondary framing is sufficient to prevent ponding if the flexibility coefficient read from this latter scale is more than the value of C_p computed for the given primary member; if not, a stiffer primary or secondary beam, or combination of both, is required.

A similar procedure must be followed using Figure A-2.2.

For roof framing consisting of a series of equally spaced wall bearing beams, evaluate the stiffness as follows. The beams are considered as secondary members supported on an infinitely stiff primary member. For this case, enter Figure A-2.2 with the computed stress index, U_s. The limiting value of C_s is determined by the intercept of a horizontal line representing the U_s value and the curve for $C_p = 0$.

User Note: The ponding deflection contributed by a metal deck is usually such a small part of the total ponding deflection of a roof panel that it is sufficient merely to limit its moment of inertia [per foot (meter) of width normal to its span] to 0.000025 (3 940) times the fourth power of its span length.

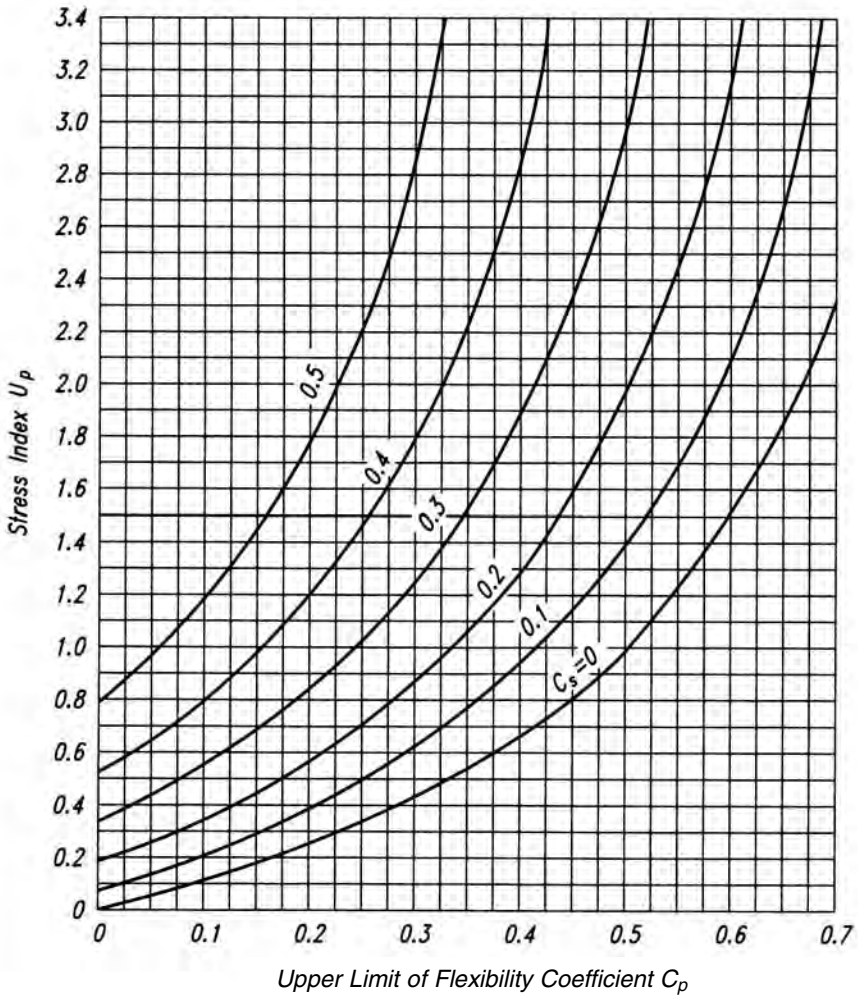

Fig. A-2.1. Limiting flexibility coefficient for the primary systems.

Evaluate the *stability* against ponding of a roof consisting of a metal roof deck of relatively slender depth-to-span ratio, spanning between beams supported directly on *columns*, as follows. Use Figure A-2.1 or A-2.2, using as C_s the flexibility coefficient for a one-foot (one-meter) width of the roof deck ($S = 1.0$).

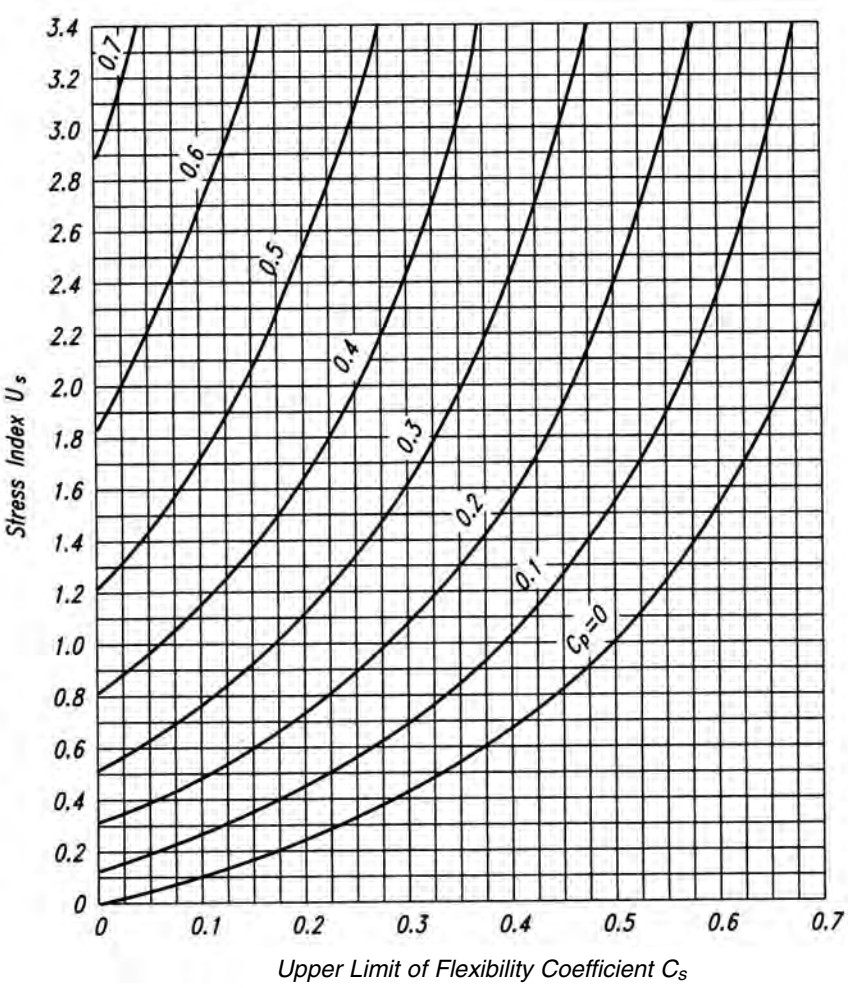

Fig. A-2.2. Limiting flexibility coefficient for the secondary systems.

APPENDIX 3

DESIGN FOR FATIGUE

This appendix applies to members and *connections* subject to high cycle loading within the elastic range of *stresses* of frequency and magnitude sufficient to initiate cracking and progressive failure, which defines the *limit state* of *fatigue*.

User Note: See AISC *Seismic Provisions for Structural Steel Buildings* for structures subject to seismic *loads*.

The appendix is organized as follows:

3.1. General Provisions
3.2. Calculation of Maximum Stresses and Allowable Stress Ranges
3.3. Plain Material and Welded Joints
3.4. Bolts and Threaded Parts
3.5. Special Fabrication and Erection Requirements

3.1. GENERAL PROVISIONS

The provisions of this Appendix apply to *stresses* calculated on the basis of *service loads*. The maximum permitted stress due to service loads is $0.66F_y$.

Stress range is defined as the magnitude of the change in stress due to the application or removal of the service live *load*. In the case of a stress reversal, the stress range shall be computed as the numerical sum of maximum repeated tensile and compressive stresses or the numerical sum of maximum shearing stresses of opposite direction at the point of probable crack initiation.

In the case of *complete-joint-penetration groove welds*, the maximum *allowable stress* range calculated by Equation A-3-1 applies only to welds that have been ultrasonically or radiographically tested and meet the acceptance requirements of Sections 6.12.2 or 6.13.2 of AWS D1.1/D1.1M.

No evaluation of *fatigue* resistance is required if the live load stress range is less than the threshold allowable stress range, F_{TH}. See Table A-3.1.

No evaluation of fatigue resistance of members consisting of shapes or plate is required if the number of cycles of application of live load is less than 20,000. No evaluation of fatigue resistance of members consisting of *HSS* in building-type structures subject to code mandated wind loads is required.

The cyclic load resistance determined by the provisions of this Appendix is applicable to structures with suitable corrosion protection or subject only to mildly corrosive atmospheres, such as normal atmospheric conditions.

The cyclic *load* resistance determined by the provisions of this Appendix is applicable only to structures subject to temperatures not exceeding 300 °F (150 °C).

The *engineer of record* shall provide either complete details including weld sizes or shall specify the planned cycle life and the maximum range of moments, shears and reactions for the *connections*.

3.2. CALCULATION OF MAXIMUM STRESSES AND STRESS RANGES

Calculated *stresses* shall be based upon *elastic analysis*. Stresses shall not be amplified by *stress concentration* factors for geometrical discontinuities.

For bolts and threaded rods subject to axial tension, the calculated stresses shall include the effects of *prying action*, if any. In the case of axial stress combined with bending, the maximum stresses, of each kind, shall be those determined for concurrent arrangements of the applied *load*.

For members having symmetric cross sections, the *fasteners* and welds shall be arranged symmetrically about the axis of the member, or the total stresses including those due to eccentricity shall be included in the calculation of the stress range.

For axially loaded angle members where the center of gravity of the connecting welds lies between the line of the center of gravity of the angle cross section and the center of the connected leg, the effects of eccentricity shall be ignored. If the center of gravity of the connecting welds lies outside this zone, the total stresses, including those due to *joint eccentricity*, shall be included in the calculation of stress range.

3.3. PLAIN MATERIAL AND WELDED JOINTS

In plain material and welded joints the range of *stress* at *service loads* shall not exceed the *allowable stress* range computed as follows.

(a) For stress categories A, B, B′, C, D, E and E′ the allowable stress range, F_{SR}, shall be determined by Equation A-3-1 or A-3-1M, as follows:

$$F_{SR} = \left(\frac{C_f}{n_{SR}} \right)^{0.333} \geq F_{TH} \qquad \text{(A-3-1)}$$

$$F_{SR} = \left(\frac{C_f \times 329}{n_{SR}} \right)^{0.333} \geq F_{TH} \quad \text{(S.I.)} \qquad \text{(A-3-1M)}$$

where

C_f = constant from Table A-3.1 for the *fatigue* category
F_{SR} = allowable stress range, ksi (MPa)
F_{TH} = threshold allowable stress range, maximum stress range for indefinite design life from Table A-3.1, ksi (MPa)
n_{SR} = number of stress range fluctuations in design life
= number of stress range fluctuations per day × 365 × years of design life

(b) For stress category F, the allowable stress range, F_{SR}, shall be determined by Equation A-3-2 or A-3-2M as follows:

$$F_{SR} = \left(\frac{C_f}{n_{SR}} \right)^{0.167} \geq F_{TH} \tag{A-3-2}$$

$$F_{SR} = \left(\frac{C_f \left(11 \times 10^4\right)}{n_{SR}} \right)^{0.167} \geq F_{TH} \quad \text{(S.I.)} \tag{A-3-2M}$$

(c) For tension-loaded plate elements connected at their end by cruciform, T or corner details with *complete-joint-penetration* (CJP) *groove welds* or *partial-joint-penetration* (PJP) *groove welds*, *fillet welds*, or combinations of the preceding, transverse to the direction of stress, the allowable stress range on the cross section of the tension-loaded plate element at the toe of the weld shall be determined as follows:

(i) Based upon crack initiation from the toe of the weld on the tension loaded plate element the allowable stress range, F_{SR}, shall be determined by Equation A-3-3 or A-3-3M, for stress category C as follows:

$$F_{SR} = \left(\frac{44 \times 10^8}{n_{SR}} \right)^{0.333} \geq 10 \tag{A-3-3}$$

$$F_{SR} = \left(\frac{14.4 \times 10^{11}}{n_{SR}} \right)^{0.333} \geq 68.9 \quad \text{(S.I.)} \tag{A-3-3M}$$

(ii) Based upon crack initiation from the root of the weld the allowable stress range, F_{SR}, on the tension loaded plate element using transverse PJP groove welds, with or without reinforcing or contouring fillet welds, the allowable stress range on the cross section at the toe of the weld shall be determined by Equation A-3-4 or A-3-4M, for stress category C′ as follows:

$$F_{SR} = R_{PJP} \left(\frac{44 \times 10^8}{n_{SR}} \right)^{0.333} \tag{A-3-4}$$

$$F_{SR} = R_{PJP} \left(\frac{14.4 \times 10^{11}}{n_{SR}} \right)^{0.333} \quad \text{(S.I.)} \tag{A-3-4M}$$

where

R_{PJP}, the reduction factor for reinforced or nonreinforced transverse PJP groove welds, is determined as follows:

$$R_{PJP} = \left(\frac{0.65 - 0.59\left(\frac{2a}{t_p}\right) + 0.72\left(\frac{w}{t_p}\right)}{t_p^{0.167}} \right) \le 1.0 \qquad \text{(A-3-5)}$$

$$R_{PJP} = \left(\frac{1.12 - 1.01\left(\frac{2a}{t_p}\right) + 1.24\left(\frac{w}{t_p}\right)}{t_p^{0.167}} \right) \le 1.0 \quad \text{(S.I.)} \qquad \text{(A-3-5M)}$$

If $R_{PJP} = 1.0$, use stress category C.

$2a$ = length of the nonwelded root face in the direction of the thickness of the tension-loaded plate, in. (mm)

w = leg size of the reinforcing or contouring fillet, if any, in the direction of the thickness of the tension-loaded plate, in. (mm)

t_p = thickness of tension loaded plate, in. (mm)

(iii) Based upon crack initiation from the roots of a pair of transverse fillet welds on opposite sides of the tension loaded plate element, the allowable stress range, F_{SR}, on the cross section at the toe of the welds shall be determined by Equation A-3-6 or A-3-6M, for stress category C″ as follows:

$$F_{SR} = R_{FIL}\left(\frac{44 \times 10^8}{n_{SR}}\right)^{0.333} \qquad \text{(A-3-6)}$$

$$F_{SR} = R_{FIL}\left(\frac{14.4 \times 10^{11}}{n_{SR}}\right)^{0.333} \quad \text{(S.I.)} \qquad \text{(A-3-6M)}$$

where

R_{FIL} is the reduction factor for joints using a pair of transverse fillet welds only.

$$R_{FIL} = \left(\frac{0.06 + 0.72\left(w / t_p\right)}{t_p^{0.167}} \right) \le 1.0 \qquad \text{(A-3-7)}$$

$$R_{FIL} = \left(\frac{0.10 + 1.24(w / t_p)}{t_p^{0.167}} \right) \le 1.0 \quad \text{(S.I.)} \qquad \text{(A-3-7M)}$$

If $R_{FIL} = 1.0$, use stress category C.

3.4. BOLTS AND THREADED PARTS

In bolts and threaded parts, the range of *stress* at *service loads* shall not exceed the *allowable stress* range computed as follows.

(a) For mechanically fastened *connections* loaded in shear, the maximum range of stress in the connected material at service loads shall not exceed the allowable stress range computed using Equation A-3-1 where C_f and F_{TH} are taken from Section 2 of Table A-3.1.

(b) For high-strength bolts, common bolts and threaded anchor rods with cut, ground or rolled threads, the maximum range of tensile stress on the net tensile area from applied axial *load* and moment plus load due to *prying action* shall not exceed the allowable stress range computed using Equation A-3-8 or A-3-8M (stress category G). The *net area* in tension, A_t, is given by Equation A-3-9 or A-3-9M.

$$F_{SR} = \left(\frac{3.9 \times 10^8}{n_{SR}} \right)^{0.333} \geq 7 \qquad \text{(A-3-8)}$$

$$F_{SR} = \left(\frac{1.28 \times 10^{11}}{n_{SR}} \right)^{0.333} \geq 48 \quad \text{(S.I.)} \qquad \text{(A-3-8M)}$$

$$A_t = \frac{\pi}{4} \left(d_b - \frac{0.9743}{n} \right)^2 \qquad \text{(A-3-9)}$$

$$A_t = \frac{\pi}{4} \left(d_b - 0.9382\,p \right)^2 \quad \text{(S.I.)} \qquad \text{(A-3-9M)}$$

where

d_b = the nominal diameter (body or shank diameter), in. (mm)
n = threads per in. (threads per mm)
p = *pitch*, in. per thread (mm per thread)

For *joints* in which the material within the *grip* is not limited to steel or joints which are not tensioned to the requirements of Table J3.1 or J3.1M, all axial load and moment applied to the *joint* plus effects of any prying action shall be assumed to be carried exclusively by the bolts or rods.

For joints in which the material within the grip is limited to steel and which are pretensioned to the requirements of Table J3.1 or J3.1M, an analysis of the relative *stiffness* of the connected parts and bolts shall be permitted to be used to determine the tensile stress range in the *pretensioned bolts* due to the total service live load and moment plus effects of any prying action. Alternatively, the stress range in the bolts shall be assumed to be equal to the stress on the net tensile area due to 20% of the absolute value of the service load axial load and moment from dead, live and other loads.

3.5. SPECIAL FABRICATION AND ERECTION REQUIREMENTS

Longitudinal backing bars are permitted to remain in place, and if used, shall be continuous. If splicing is necessary for long *joints*, the bar shall be joined with complete penetration butt joints and the reinforcement ground prior to assembly in the joint. Longitudinal backing, if left in place, shall be attached with continuous *fillet welds*.

In transverse joints subject to tension, backing bars, if used, shall be removed and the joint back gouged and welded.

In transverse complete-joint-penetration T and corner joints, a reinforcing fillet weld, not less than $^1/_4$ in. (6 mm) in size shall be added at *reentrant* corners.

The surface roughness of *thermally cut* edges subject to cyclic *stress* ranges, that include tension, shall not exceed 1,000 μin. (25 μm), where ASME B46.1 is the reference standard.

User Note: AWS C4.1 Sample 3 may be used to evaluate compliance with this requirement.

Reentrant corners at cuts, *copes* and weld access holes shall form a radius of not less than $^3/_8$ in. (10 mm) by predrilling or subpunching and reaming a hole, or by thermal cutting to form the radius of the cut. If the radius portion is formed by thermal cutting, the cut surface shall be ground to a bright metal surface.

For transverse butt joints in regions of tensile stress, weld tabs shall be used to provide for cascading the weld termination outside the finished joint. End dams shall not be used. Run-off tabs shall be removed and the end of the weld finished flush with the edge of the member.

See Section J2.2b for requirements for *end return*s on certain fillet welds subject to cyclic service loading.

TABLE A-3.1
Fatigue Design Parameters

Description	Stress Category	Constant C_f	Threshold F_{TH} ksi (MPa)	Potential Crack Initiation Point
SECTION 1 – PLAIN MATERIAL AWAY FROM ANY WELDING				
1.1 Base metal, except noncoated weathering steel, with rolled or cleaned surface. Flame-cut edges with surface roughness value of 1,000 μin. (25 μm) or less, but without reentrant corners.	A	250×10^8	24 (165)	Away from all welds or structural connections
1.2 Noncoated weathering steel base metal with rolled or cleaned surface. Flame-cut edges with surface roughness value of 1,000 μin. (25 μm) or less, but without reentrant corners.	B	120×10^8	16 (110)	Away from all welds or structural connections
1.3 Member with drilled or reamed holes. Member with re-entrant corners at copes, cuts, block-outs or other geometrical discontinuities made to requirements of Appendix 3, Section 3.5, except weld access holes.	B	120×10^8	16 (110)	At any external edge or at hole perimeter
1.4 Rolled cross sections with weld access holes made to requirements of Section J1.6 and Appendix 3, Section 3.5. Members with drilled or reamed holes containing bolts for attachment of light bracing where there is a small longitudinal component of brace force.	C	44×10^8	10 (69)	At reentrant corner of weld access hole or at any small hole (may contain bolt for minor connections)
SECTION 2 – CONNECTED MATERIAL IN MECHANICALLY FASTENED JOINTS				
2.1 Gross area of base metal in lap joints connected by high-strength bolts in joints satisfying all requirements for slip-critical connections.	B	120×10^8	16 (110)	Through gross section near hole
2.2 Base metal at net section of high-strength bolted joints, designed on the basis of bearing resistance, but fabricated and installed to all requirements for slip-critical connections.	B	120×10^8	16 (110)	In net section originating at side of hole
2.3 Base metal at the net section of other mechanically fastened joints except eye bars and pin plates.	D	22×10^8	7 (48)	In net section originating at side of hole
2.4 Base metal at net section of *eyebar* head or pin plate.	E	11×10^8	4.5 (31)	In net section originating at side of hole

TABLE A-3.1 (continued)
Fatigue Design Parameters

Illustrative Typical Examples

SECTION 1 – PLAIN MATERIAL AWAY FROM ANY WELDING

1.1 and 1.2

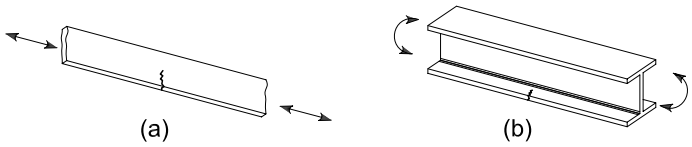

1.3

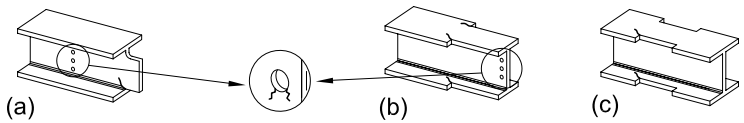

1.4

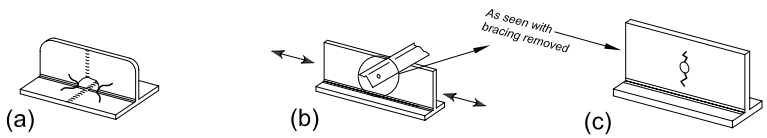

SECTION 2 – CONNECTED MATERIAL IN MECHANICALLY FASTENED JOINTS

2.1

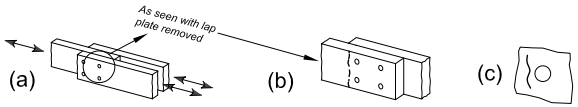

(Note: figures are for slip-critical bolted connections)

2.2

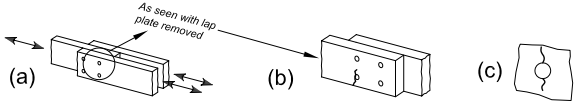

(Note: figures are for bolted connections designed to bear, meeting the requirements of slip-critical connections)

2.3

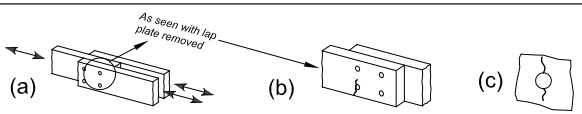

(Note: figures are for snug-tightened bolts, rivets, or other mechanical fasteners)

2.4

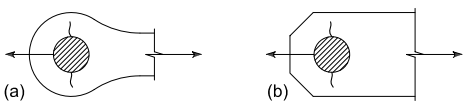

TABLE A-3.1 (continued)
Fatigue Design Parameters

Description	Stress Category	Constant C_f	Threshold F_{TH} ksi (MPa)	Potential Crack Initiation Point
SECTION 3 – WELDED JOINTS JOINING COMPONENTS OF BUILT-UP MEMBERS				
3.1 Base metal and weld metal in members without attachments built up of plates or shapes connected by continuous longitudinal complete-joint-penetration groove welds, back gouged and welded from second side, or by continuous fillet welds.	B	120×10^8	16 (110)	From surface or internal discontinuities in weld away from end of weld
3.2 Base metal and weld metal in members without attachments built up of plates or shapes, connected by continuous longitudinal complete-joint-penetration groove welds with backing bars not removed, or by continuous partial-joint-penetration groove welds.	B′	61×10^8	12 (83)	From surface or internal discontinuities in weld, including weld attaching backing bars
3.3 Base metal at weld metal terminations of longitudinal welds at weld access holes in connected built-up members.	D	22×10^8	7 (48)	From the weld termination into the web or flange
3.4 Base metal at ends of longitudinal intermittent fillet weld segments.	E	11×10^8	4.5 (31)	In connected material at start and stop locations of any weld deposit
3.5 Base metal at ends of partial length welded coverplates narrower than the flange having square or tapered ends, with or without welds across the ends; and coverplates wider than the flange with welds across the ends.				In flange at toe of end weld or in flange at termination of longitudinal weld or in edge of flange with wide coverplates
Flange thickness (t_f) ≤ 0.8 in. (20 mm)	E	11×10^8	4.5 (31)	
Flange thickness (t_f) > 0.8 in. (20 mm)	E′	3.9×10^8	2.6 (18)	
3.6 Base metal at ends of partial length welded coverplates wider than the flange without welds across the ends.	E′	3.9×10^8	2.6 (18)	In edge of flange at end of coverplate weld
SECTION 4 – LONGITUDINAL FILLET WELDED END CONNECTIONS				
4.1 Base metal at junction of axially loaded members with longitudinally welded end connections. Welds shall be on each side of the axis of the member to balance weld stresses.				Initiating from end of any weld termination extending into the base metal
t ≤ 0.5 in. (12 mm)	E	11×10^8	4.5 (31)	
t > 0.5 in. (12 mm)	E′	3.9×10^8	2.6 (18)	

TABLE A-3.1 (continued)
Fatigue Design Parameters

Illustrative Typical Examples

SECTION 3 – WELDED JOINTS JOINING COMPONENTS OF BUILT-UP MEMBERS

3.1

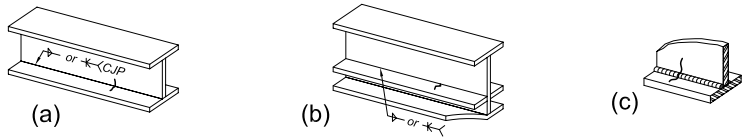

3.2

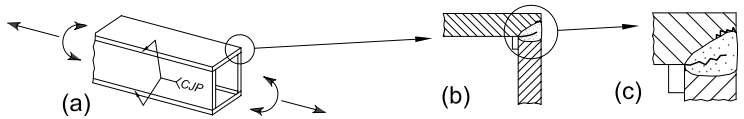

3.3

3.4

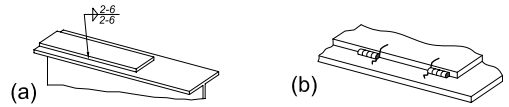

3.5

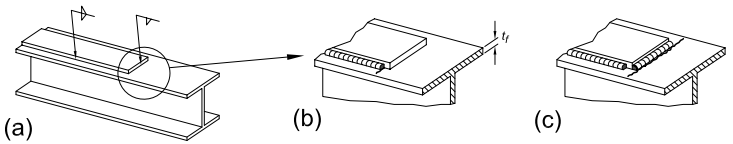

3.6

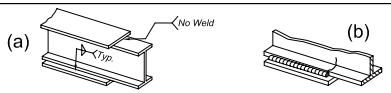

SECTION 4 – LONGITUDINAL FILLET WELDED END CONNECTIONS

4.1

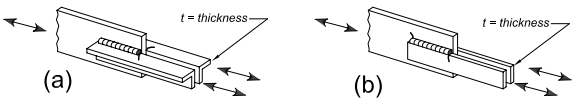

TABLE A-3.1 (continued)
Fatigue Design Parameters

Description	Stress Category	Constant C_f	Threshold F_{TH} ksi (MPa)	Potential Crack Initiation Point
SECTION 5 – WELDED JOINTS TRANSVERSE TO DIRECTION OF STRESS				
5.1 Weld metal and base metal in or adjacent to complete-joint-penetration groove welded splices in rolled or welded cross sections with welds ground essentially parallel to the direction of stress and with soundness established by radiographic or ultrasonic inspection in accordance with the requirements of subclauses 6.12 or 6.13 of AWS D1.1/D1.1M.	B	120×10^8	16 (110)	From internal discontinuities in weld metal or along the fusion boundary
5.2 Weld metal and base metal in or adjacent to complete-joint-penetration groove welded splices with welds ground essentially parallel to the direction of stress at transitions in thickness or width made on a slope no greater than 1:2 1/2 and with weld soundness established by radiographic or ultrasonic inspection in accordance with the requirements of subclauses 6.12 or 6.13 of AWS D1.1/D1.1M.				From internal discontinuities in filler metal or along fusion boundary or at start of transition when $F_y \geq 90$ ksi (620 MPa)
$F_y < 90$ ksi (620 MPa)	B	120×10^8	16 (110)	
$F_y \geq 90$ ksi (620 MPa)	B′	61×10^8	12 (83)	
5.3 Base metal with F_y equal to or greater than 90 ksi (620 MPa) and weld metal in or adjacent to complete-joint-penetration groove welded splices with welds ground essentially parallel to the direction of stress at transitions in width made on a radius of not less than 2 ft (600 mm) with the point of tangency at the end of the groove weld and with weld soundness established by radiographic or ultrasonic inspection in accordance with the requirements of subclauses 6.12 or 6.13 of AWS D1.1/D1.1M.	B	120×10^8	16 (110)	From internal discontinuities in filler metal or discontinuities along the fusion boundary
5.4 Weld metal and base metal in or adjacent to the toe of complete-joint-penetration groove welds in T or corner joints or splices, with or without transitions in thickness having slopes no greater than 1:2 1/2, when weld reinforcement is not removed and with weld soundness established by radiographic or ultrasonic inspection in accordance with the requirements of subclauses 6.12 or 6.13 of AWS D1.1/D1.1M.	C	44×10^8	10 (69)	From surface discontinuity at toe of weld extending into base metal or into weld metal.

TABLE A-3.1 (continued)
Fatigue Design Parameters

Illustrative Typical Examples

SECTION 5 – WELDED JOINTS TRANSVERSE TO DIRECTION OF STRESS

5.1

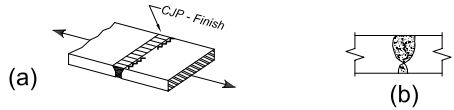

5.2

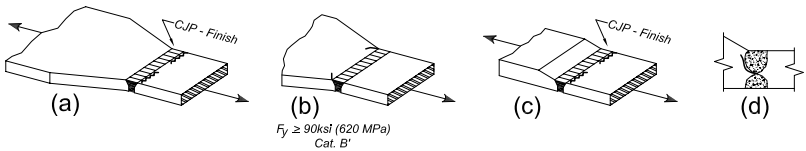

5.3

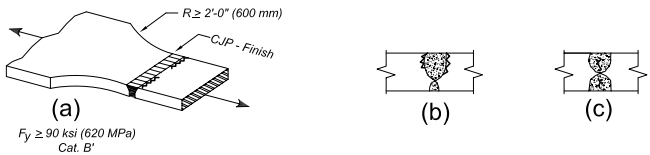

5.4

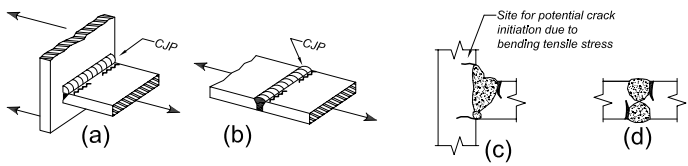

TABLE A-3.1 (continued)
Fatigue Design Parameters

Description	Stress Category	Constant C_f	Threshold F_{TH} ksi (MPa)	Potential Crack Initiation Point
SECTION 5 – WELDED JOINTS TRANSVERSE TO DIRECTION OF STRESS (continued)				
5.5 Base metal and weld metal at transverse end connections of tension-loaded plate elements using partial-joint-penetration groove welds in butt or T- or corner joints, with reinforcing or contouring fillets, F_{SR} shall be the smaller of the toe crack or root crack allowable stress range.				
Crack initiating from weld toe:	C	44×10^8	10 (69)	Initiating from geometrical discontinuity at toe of weld extending into base metal.
Crack initiating from weld root:	C′	Eqn. A-3-4 or A-3-4M	None provided	Initiating at weld root subject to tension extending into and through weld
5.6 Base metal and weld metal at transverse end connections of tension-loaded plate elements using a pair of fillet welds on opposite sides of the plate. F_{SR} shall be the smaller of the toe crack or root crack allowable stress range.				
Crack initiating from weld toe:	C	44×10^8	10 (69)	Initiating from geometrical discontinuity at toe of weld extending into base metal.
Crack initiating from weld root:	C″	Eqn. A-3-5 or A-3-5M	None provided	Initiating at weld root subject to tension extending into and through weld
5.7 Base metal of tension loaded plate elements and on girders and rolled beam webs or flanges at toe of transverse fillet welds adjacent to welded transverse stiffeners.	C	44×10^8	10 (69)	From geometrical discontinuity at toe of fillet extending into base metal

TABLE A-3.1 (continued)
Fatigue Design Parameters

Illustrative Typical Examples

SECTION 5 – WELDED JOINTS TRANSVERSE TO DIRECTION OF STRESS

5.5

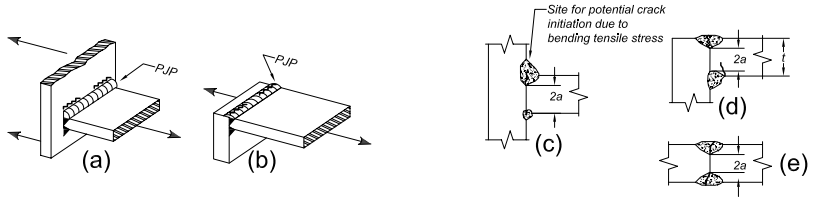

5.6

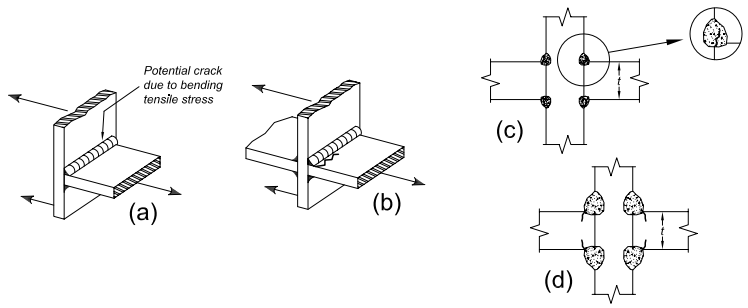

5.7

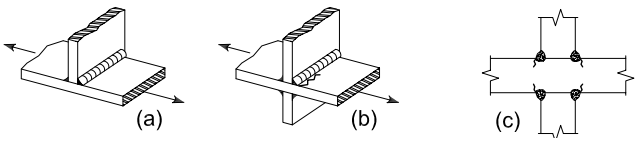

TABLE A-3.1 (continued)
Fatigue Design Parameters

Description	Stress Category	Constant C_f	Threshold F_{TH} ksi (MPa)	Potential Crack Initiation Point
SECTION 6 – BASE METAL AT WELDED TRANSVERSE MEMBER CONNECTIONS				
6.1 Base metal at details attached by complete-joint-penetration groove welds subject to longitudinal loading only when the detail embodies a transition radius, R, with the weld termination ground smooth and with weld soundness established by radiographic or ultrasonic inspection in accordance with the requirements of subclauses 6.12 or 6.13 of AWS D1.1/D1.1M.				Near point of tangency of radius at edge of member
$R \geq 24$ in. (600 mm)	B	120×10^8	16 (110)	
24 in. $> R \geq 6$ in. (600 mm $> R \geq 150$ mm)	C	44×10^8	10 (69)	
6 in. $> R \geq 2$ in. (150 mm $> R \geq 50$ mm)	D	22×10^8	7 (48)	
2 in. (50 mm) $> R$	E	11×10^8	4.5 (31)	
6.2 Base metal at details of equal thickness attached by complete-joint-penetration groove welds subject to transverse loading with or without longitudinal loading when the detail embodies a transition radius, R, with the weld termination ground smooth and with weld soundness established by radiographic or ultrasonic inspection in accordance with the requirements of subclauses 6.12 or 6.13 of AWS D1.1/D1.1M:				
When weld reinforcement is removed:				
$R \geq 24$ in. (600 mm)	B	120×10^8	16 (110)	Near points of tangency of radius or in the weld or at fusion boundary or member or attachment
24 in. $> R \geq 6$ in. (600 mm $> R \geq 150$ mm)	C	44×10^8	10 (69)	
6 in. $> R \geq 2$ in. (150 mm $> R \geq 50$ mm)	D	22×10^8	7 (48)	
2 in. (50 mm) $> R$	E	11×10^8	4.5 (31)	
When weld reinforcement is not removed:				At toe of the weld either along edge of member or the attachment
$R \geq 24$ in. (600 mm)	C	44×10^8	10 (69)	
24 in. $> R \geq 6$ in. (600 mm $> R \geq 150$ mm)	C	44×10^8	10 (69)	
6 in. $> R \geq 2$ in. (150 mm $> R \geq 50$ mm)	D	22×10^8	7 (48)	
2 in. (50 mm) $> R$	E	11×10^8	4.5 (31)	

TABLE A-3.1 (continued)
Fatigue Design Parameters

Illustrative Typical Examples

SECTION 6 – BASE METAL AT WELDED TRANSVERSE MEMBER CONNECTIONS

6.1

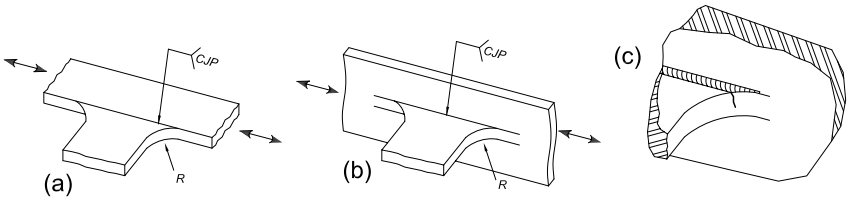

6.2

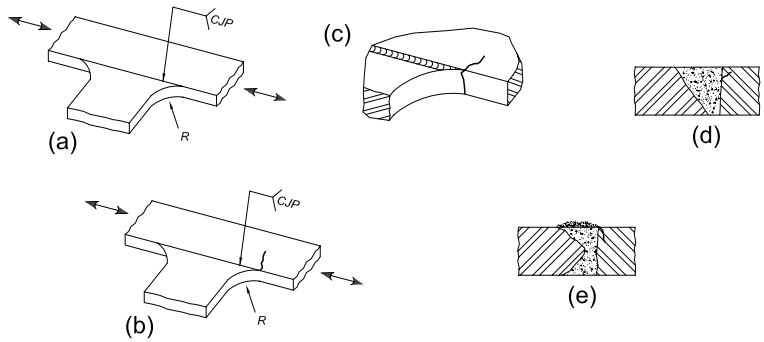

TABLE A-3.1 (continued)
Fatigue Design Parameters

Description	Stress Category	Constant C_f	Threshold F_{TH} ksi (MPa)	Potential Crack Initiation Point
SECTION 6 – BASE METAL AT WELDED TRANSVERSE MEMBER CONNECTIONS (cont'd)				
6.3 Base metal at details of unequal thickness attached by complete-joint-penetration groove welds subject to transverse loading with or without longitudinal loading when the detail embodies a transition radius, R, with the weld termination ground smooth and with weld soundness established by radiographic or ultrasonic inspection in accordance with the requirements of subclauses 6.12 or 6.13 of AWS D1.1/D1.1M.				
When weld reinforcement is removed:				
$R > 2$ in. (50 mm)	D	22×10^8	7 (48)	At toe of weld along edge of thinner material
$R \leq 2$ in. (50 mm)	E	11×10^8	4.5 (31)	In weld termination in small radius
When reinforcement is not removed:				
Any radius	E	11×10^8	4.5 (31)	At toe of weld along edge of thinner material
6.4 Base metal subject to longitudinal stress at transverse members, with or without transverse stress, attached by fillet or partial-joint-penetration groove welds parallel to direction of stress when the detail embodies a transition radius, R, with weld termination ground smooth:				Initiating in base metal at the weld termination or at the toe of the weld extending into the base metal
$R > 2$ in. (50 mm)	D	22×10^8	7 (48)	
$R \leq 2$ in. (50 mm)	E	11×10^8	4.5 (31)	

TABLE A-3.1 (continued)
Fatigue Design Parameters

Illustrative Typical Examples

SECTION 6 – BASE METAL AT WELDED TRANSVERSE MEMBER CONNECTIONS (cont'd)

6.3

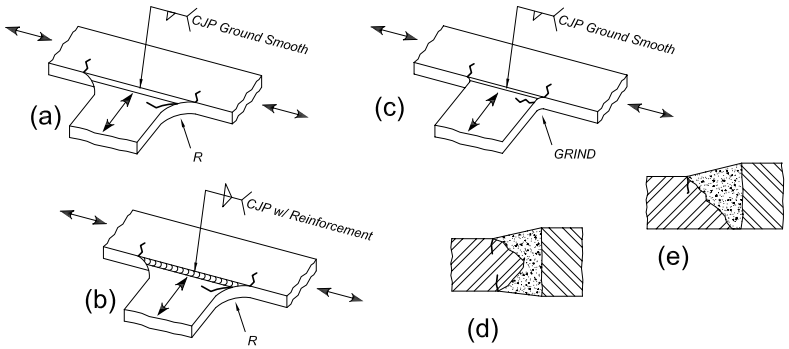

6.4

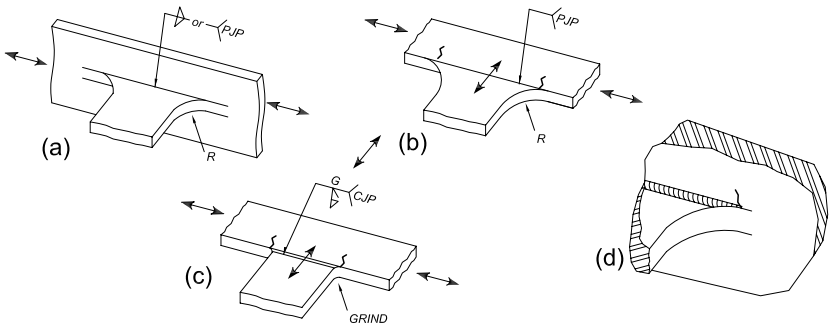

TABLE A-3.1 (continued)
Fatigue Design Parameters

Description	Stress Category	Constant C_f	Threshold F_{TH} ksi (MPa)	Potential Crack Initiation Point
SECTION 7 – BASE METAL AT SHORT ATTACHMENTS[1]				
7.1 Base metal subject to longitudinal loading at details with welds parallel or transverse to the direction of stress where the detail embodies no transition radius and with detail length in direction of stress, *a*, and thickness of the attachment, *b*:				Initiating in base metal at the weld termination or at the toe of the weld extending into the base metal
$a < 2$ in. (50 mm)	C	44×10^8	10 (69)	
2 in. (50 mm) $\le a \le$ lesser of $12b$ or 4 in. (100 mm)	D	22×10^8	7 (48)	
$a >$ 4 in. (100 mm) when $b >$ 0.8 in. (20 mm)	E	11×10^8	4.5 (31)	
$a >$ lesser of $12b$ or 4 in. (100 mm) when $b \le$ 0.8 in. (20 mm)	E′	3.9×10^8	2.6 (18)	
7.2 Base metal subject to longitudinal stress at details attached by fillet or partial-joint-penetration groove welds, with or without transverse load on detail, when the detail embodies a transition radius, *R*, with weld termination ground smooth:				Initiating in base metal at the weld termination, extending into the base metal
R > 2 in. (50 mm)	D	22×10^8	7 (48)	
R ≤ 2 in. (50 mm)	E	11×10^8	4.5 (31)	

[1] "Attachment" as used herein is defined as any steel detail welded to a member which, by its mere presence and independent of its loading, causes a discontinuity in the stress flow in the member and thus reduces the fatigue resistance.

TABLE A-3.1 (continued)
Fatigue Design Parameters

Illustrative Typical Examples

SECTION 7 – BASE METAL AT SHORT ATTACHMENTS[1]

7.1

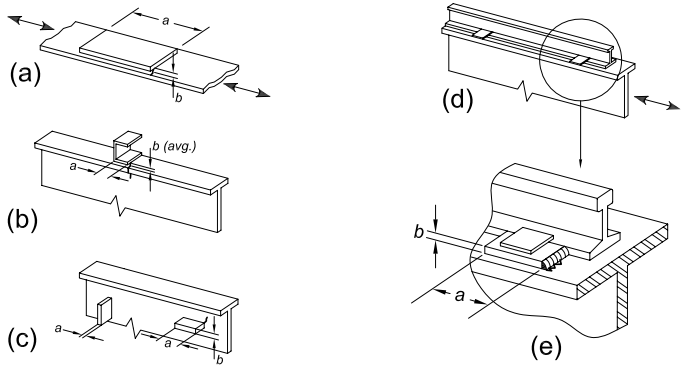

7.2

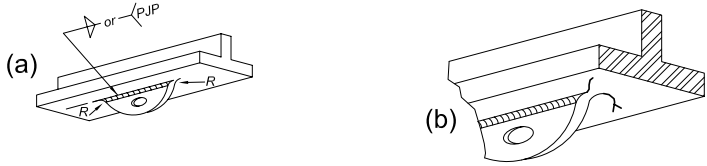

TABLE A-3.1 (continued)
Fatigue Design Parameters

Description	Stress Category	Constant C_f	Threshold F_{TH} ksi (MPa)	Potential Crack Initiation Point
SECTION 8 - MISCELLANEOUS				
8.1 Base metal at steel headed stud anchors attached by fillet or automatic stud welding.	C	44×10^8	10 (69)	At toe of weld in base metal
8.2 Shear on throat of continuous or intermittent longitudinal or transverse fillet welds.	F	150×10^{10} (Eqn. A-3-2 or A-3-2M)	8 (55)	Initiating at the root of the fillet weld, extending into the weld
8.3 Base metal at plug or slot welds.	E	11×10^8	4.5 (31)	Initiating in the base metal at the end of the plug or slot weld, extending into the base metal
8.4 Shear on plug or slot welds.	F	150×10^{10} (Eqn. A-3-2 or A-3-2M)	8 (55)	Initiating in the weld at the faying surface, extending into the weld
8.5 Snug-tightened high-strength bolts, common bolts, threaded anchor rods, and hanger rods with cut, ground or rolled threads. Stress range on tensile stress area due to live load plus prying action when applicable.	G	3.9×10^8	7 (48)	Initiating at the root of the threads, extending into the fastener

TABLE A-3.1 (continued)
Fatigue Design Parameters

Illustrative Typical Examples

SECTION 8 - MISCELLANEOUS

8.1

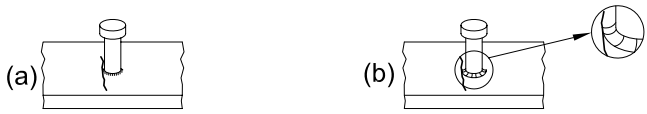

8.2

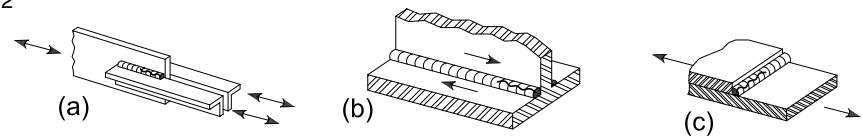

8.3

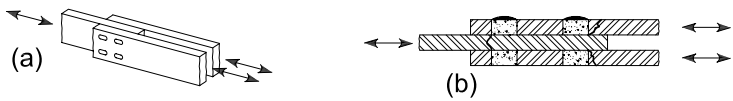

8.4

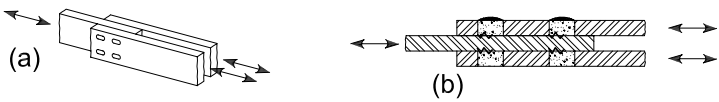

8.5

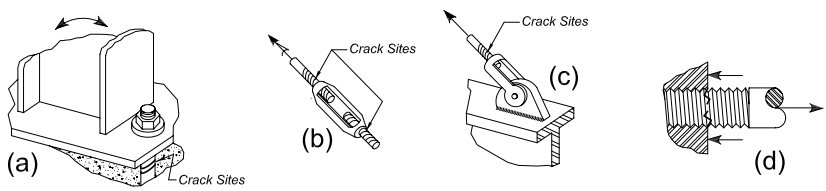

APPENDIX 4

STRUCTURAL DESIGN FOR FIRE CONDITIONS

This appendix provides criteria for the design and evaluation of *structural steel* components, systems and frames for *fire* conditions. These criteria provide for the determination of the heat input, thermal expansion and degradation in mechanical properties of materials at *elevated temperatures* that cause progressive decrease in strength and *stiffness* of *structural components* and systems at elevated temperatures.

The appendix is organized as follows:

4.1. General Provisions
4.2. Structural Design for Fire Conditions by Analysis
4.3. Design by Qualification Testing

4.1. GENERAL PROVISIONS

The methods contained in this appendix provide regulatory evidence of compliance in accordance with the design applications outlined in this section.

4.1.1. Performance Objective

Structural components, members and building frame systems shall be designed so as to maintain their *load*-bearing function during the *design-basis fire* and to satisfy other performance requirements specified for the building occupancy.

Deformation criteria shall be applied where the means of providing structural *fire resistance*, or the design criteria for *fire barriers*, requires consideration of the deformation of the load-carrying structure.

Within the compartment of *fire* origin, *forces* and deformations from the design-basis fire shall not cause a breach of horizontal or vertical *compartmentation*.

4.1.2. Design by Engineering Analysis

The analysis methods in Section 4.2 are permitted to be used to document the anticipated performance of steel framing when subjected to *design-basis fire* scenarios. Methods in Section 4.2 provide evidence of compliance with performance objectives established in Section 4.1.1.

The analysis methods in Section 4.2 are permitted to be used to demonstrate an equivalency for an alternative material or method, as permitted by the *applicable building code*.

Structural design for *fire* conditions using Appendix 4.2 shall be performed using the *load and resistance factor design* method in accordance with the provisions of Section B3.3 (LRFD).

4.1.3. Design by Qualification Testing

The qualification testing methods in Section 4.3 are permitted to be used to document the *fire resistance* of steel framing subject to the standardized *fire* testing protocols required by the *applicable building code*.

4.1.4. Load Combinations and Required Strength

The *required strength* of the structure and its elements shall be determined from the *gravity load combination* as follows:

$$[0.9 \text{ or } 1.2]\ D + T + 0.5L + 0.2S \qquad \text{(A-4-1)}$$

where

D = *nominal dead load*
L = nominal occupancy live load
S = nominal snow load
T = nominal forces and deformations due to the *design-basis fire* defined in Section 4.2.1

A *notional load*, $N_i = 0.002Y_i$, as defined in Section C2.2, where N_i = notional load applied at framing level i and Y_i = gravity load from combination A-4-1 acting on framing level i, shall be applied in combination with the *loads* stipulated in Equation A-4-1. Unless otherwise stipulated by the *applicable building code*, D, L and S shall be the *nominal loads* specified in ASCE/SEI 7.

4.2. STRUCTURAL DESIGN FOR FIRE CONDITIONS BY ANALYSIS

It is permitted to design structural members, components and building frames for *elevated temperatures* in accordance with the requirements of this section.

4.2.1. Design-Basis Fire

A *design-basis fire* shall be identified to describe the heating conditions for the structure. These heating conditions shall relate to the fuel commodities and compartment characteristics present in the assumed *fire* area. The fuel *load* density based on the occupancy of the space shall be considered when determining the total fuel load. Heating conditions shall be specified either in terms of a *heat flux* or temperature of the upper gas layer created by the fire. The variation of the heating conditions with time shall be determined for the duration of the fire.

When the analysis methods in Section 4.2 are used to demonstrate an equivalency as an alternative material or method as permitted by the *applicable building code*, the design-basis fire shall be determined in accordance with ASTM E119.

4.2.1.1. Localized Fire

Where the *heat release rate* from the *fire* is insufficient to cause *flashover*, a localized fire exposure shall be assumed. In such cases, the fuel composition, arrangement of the fuel array and floor area occupied by the fuel shall be used to determine the radiant heat flux from the flame and smoke plume to the structure.

4.2.1.2. Post-Flashover Compartment Fires

Where the heat release rate from the *fire* is sufficient to cause *flashover*, a post-flashover compartment fire shall be assumed. The determination of the temperature versus time profile resulting from the fire shall include fuel *load*, ventilation characteristics of the space (natural and mechanical), compartment dimensions and thermal characteristics of the compartment boundary.

The fire duration in a particular area shall be determined by considering the total combustible mass, or fuel load available in the space. In the case of either a localized fire or a post-flashover compartment fire, the fire duration shall be determined as the total combustible mass divided by the mass loss rate.

4.2.1.3. Exterior Fires

The exposure of exterior structure to flames projecting from windows or other wall openings as a result of a post-*flashover* compartment *fire* shall be considered along with the radiation from the interior fire through the opening. The shape and length of the flame projection shall be used along with the distance between the flame and the exterior steelwork to determine the heat flux to the steel. The method identified in Section 4.2.1.2 shall be used for describing the characteristics of the interior compartment fire.

4.2.1.4. Active Fire Protection Systems

The effects of *active fire protection* systems shall be considered when describing the *design-basis fire*.

Where automatic smoke and heat vents are installed in nonsprinklered spaces, the resulting smoke temperature shall be determined from calculation.

4.2.2. Temperatures in Structural Systems under Fire Conditions

Temperatures within structural members, components and frames due to the heating conditions posed by the *design-basis fire* shall be determined by a heat transfer analysis.

4.2.3. Material Strengths at Elevated Temperatures

Material properties at *elevated temperatures* shall be determined from test data. In the absence of such data, it is permitted to use the material properties stipulated in this section. These relationships do not apply for steels with *yield strengths* in excess of 65 ksi (448 MPa) or concretes with specified compression strength in excess of 8,000 psi (55 MPa).

4.2.3.1. Thermal Elongation

The coefficients of expansion shall be taken as follows:

(a) For structural and reinforcing steels: For calculations at temperatures above 150 °F (65 °C), the coefficient of thermal expansion shall be 7.8×10^{-6}/°F (1.4×10^{-5}/°C).

TABLE A-4.2.1
Properties of Steel at Elevated Temperatures

Steel Temperature, °F (°C)	$k_E = E(T)/E = G(T)/G$	$k_p = F_p(T)/F_y$	$k_y = F_y(T)/F_y$	$k_u = F_u(T)/F_y$
68 (20)	1.00	1.00	1.00	1.00
200 (93)	1.00	1.00	1.00	1.00
400 (204)	0.90	0.80	1.00	1.00
600 (316)	0.78	0.58	1.00	1.00
750 (399)	0.70	0.42	1.00	1.00
800 (427)	0.67	0.40	0.94	0.94
1000 (538)	0.49	0.29	0.66	0.66
1200 (649)	0.22	0.13	0.35	0.35
1400 (760)	0.11	0.06	0.16	0.16
1600 (871)	0.07	0.04	0.07	0.07
1800 (982)	0.05	0.03	0.04	0.04
2000 (1093)	0.02	0.01	0.02	0.02
2200 (1204)	0.00	0.00	0.00	0.00

(b) For normal weight concrete: For calculations at temperatures above 150 °F (65 °C), the coefficient of thermal expansion shall be 1.0×10^{-5}/°F (1.8×10^{-5}/°C).

(c) For *lightweight concrete*: For calculations at temperatures above 150 °F (65 °C), the coefficient of thermal expansion shall be 4.4×10^{-6}/°F (7.9×10^{-6}/°C).

4.2.3.2. Mechanical Properties at Elevated Temperatures

The deterioration in strength and *stiffness* of structural members, components and systems shall be taken into account in the *structural analysis* of the frame. The values $F_y(T)$, $F_p(T)$, $F_u(T)$, $E(T)$, $G(T)$, $f_c'(T)$, $E_c(T)$ and $\varepsilon_{cu}(T)$ at elevated temperature to be used in structural analysis, expressed as the ratio with respect to the property at ambient, assumed to be 68 °F (20 °C), shall be defined as in Tables A-4.2.1 and A-4.2.2. $F_p(T)$ is the proportional limit at *elevated temperatures*, which is calculated as a ratio to *yield strength* as specified in Table A-4.2.1. It is permitted to interpolate between these values.

For *lightweight concrete*, values of ε_{cu} shall be obtained from tests.

TABLE A-4.2.2
Properties of Concrete at Elevated Temperatures

Concrete Temperature °F (°C)	$k_c = f'_c(T)/f'_c$		$E_c(T)/E_c$	$\varepsilon_{cu}(T)$, % Normal weight concrete
	Normal weight concrete	Lightweight concrete		
68 (20)	1.00	1.00	1.00	0.25
200 (93)	0.95	1.00	0.93	0.34
400 (204)	0.90	1.00	0.75	0.46
550 (288)	0.86	1.00	0.61	0.58
600 (316)	0.83	0.98	0.57	0.62
800 (427)	0.71	0.85	0.38	0.80
1000 (538)	0.54	0.71	0.20	1.06
1200 (649)	0.38	0.58	0.092	1.32
1400 (760)	0.21	0.45	0.073	1.43
1600 (871)	0.10	0.31	0.055	1.49
1800 (982)	0.05	0.18	0.036	1.50
2000 (1093)	0.01	0.05	0.018	1.50
2200 (1204)	0.00	0.00	0.000	0.00

4.2.4. Structural Design Requirements

4.2.4.1. General Structural Integrity

The structural frame shall be capable of providing adequate strength and deformation capacity to withstand, as a system, the structural actions developed during the *fire* within the prescribed limits of deformation. The *structural system* shall be designed to sustain local damage with the structural system as a whole remaining stable.

Continuous *load* paths shall be provided to transfer all *forces* from the exposed region to the final point of resistance. The foundation shall be designed to resist the forces and to accommodate the deformations developed during the *design-basis fire*.

4.2.4.2. Strength Requirements and Deformation Limits

Conformance of the *structural system* to these requirements shall be demonstrated by constructing a mathematical model of the structure based on principles of structural mechanics and evaluating this model for the internal forces and deformations in the members of the structure developed by the temperatures from the *design-basis fire*.

Individual members shall be provided with adequate strength to resist the shears, axial forces and moments determined in accordance with these provisions.

Connections shall develop the strength of the connected members or the forces indicated above. Where the means of providing *fire resistance* requires the consideration of deformation criteria, the deformation of the structural system, or members thereof, under the design-basis fire shall not exceed the prescribed limits.

4.2.4.3. Methods of Analysis

4.2.4.3a. Advanced Methods of Analysis

The methods of analysis in this section are permitted for the design of all steel building structures for *fire* conditions. The *design-basis fire* exposure shall be that determined in Section 4.2.1. The analysis shall include both a thermal response and the mechanical response to the design-basis fire.

The thermal response shall produce a temperature field in each structural element as a result of the design-basis fire and shall incorporate temperature-dependent thermal properties of the structural elements and fire-resistive materials, as per Section 4.2.2.

The mechanical response results in forces and deformations in the *structural system* subjected to the thermal response calculated from the design-basis fire. The mechanical response shall take into account explicitly the deterioration in strength and *stiffness* with increasing temperature, the effects of thermal expansions, and large deformations. Boundary conditions and connection fixity must represent the proposed structural design. Material properties shall be defined as per Section 4.2.3.

The resulting analysis shall consider all relevant *limit states*, such as excessive deflections, connection fractures, and overall or *local buckling*.

4.2.4.3b. Simple Methods of Analysis

The methods of analysis in this section are permitted to be used for the evaluation of the performance of individual members at *elevated temperatures* during exposure to *fire*.

The support and restraint conditions (forces, moments and boundary conditions) applicable at normal temperatures are permitted to be assumed to remain unchanged throughout the fire exposure.

For steel temperatures less than or equal to 400 °F (204 °C), the member and connection *design strengths* shall be determined without consideration of temperature effects.

User Note: At temperatures below 400 °F (204 °C), the degradation in steel properties need not be considered in calculating member strengths for the simple method of analysis; however, forces and deformations induced by elevated temperatures must be considered.

(1) Tension Members

It is permitted to model the thermal response of a tension element using a one-dimensional heat transfer equation with heat input as determined by the *design-basis fire* defined in Section 4.2.1.

The design strength of a tension member shall be determined using the provisions of Chapter D, with steel properties as stipulated in Section 4.2.3 and assuming a uniform temperature over the cross section using the temperature equal to the maximum steel temperature.

(2) Compression Members

It is permitted to model the thermal response of a compression element using a one-dimensional heat transfer equation with heat input as determined by the design-basis fire defined in Section 4.2.1.

The design strength of a compression member shall be determined using the provisions of Chapter E with steel properties as stipulated in Section 4.2.3 and Equation A-4-2 used in lieu of Equations E3-2 and E3-3 to calculate the nominal compressive strength for *flexural buckling*:

$$F_{cr}(T) = \left[0.42^{\sqrt{F_y(T) / F_e(T)}} \right] F_y(T) \qquad \text{(A-4-2)}$$

where $F_y(T)$ is the *yield stress* at elevated temperature and $F_e(T)$ is the critical elastic buckling stress calculated from Equation E3-4 with the elastic modulus $E(T)$ at elevated temperature. $F_y(T)$ and $E(T)$ are obtained using coefficients from Table A-4.2.1.

(3) Flexural Members

It is permitted to model the thermal response of flexural elements using a one-dimensional heat transfer equation to calculate bottom flange temperature and to assume that this bottom flange temperature is constant over the depth of the member.

The design strength of a flexural member shall be determined using the provisions of Chapter F with steel properties as stipulated in Section 4.2.3 and Equations A-4-3 through A-4-10 used in lieu of Equations F2-2 through F2-6 to calculate the nominal flexural strength for *lateral-torsional buckling* of laterally unbraced doubly symmetric members:

(a) When $L_b \le L_r(T)$

$$M_n(T) = C_b \left[M_r(T) + \left[M_p(T) - M_r(T) \right] \left[1 - \frac{L_b}{L_r(T)} \right]^{c_x} \right] \qquad \text{(A-4-3)}$$

(b) When $L_b > L_r(T)$

$$M_n(T) = F_{cr}(T) S_x \qquad \text{(A-4-4)}$$

where

$$F_{cr}(T) = \frac{C_b \pi^2 E(T)}{\left(\frac{L_b}{r_{ts}}\right)^2} \sqrt{1 + 0.078 \frac{Jc}{S_x h_o} \left(\frac{L_b}{r_{ts}}\right)^2} \quad \text{(A-4-5)}$$

$$L_r(T) = 1.95 r_{ts} \frac{E(T)}{F_L(T)} \sqrt{\frac{Jc}{S_x h_o} + \sqrt{\left(\frac{Jc}{S_x h_o}\right)^2 + 6.76\left[\frac{F_L(T)}{E(T)}\right]^2}} \quad \text{(A-4-6)}$$

$$M_r(T) = S_x F_L(T) \quad \text{(A-4-7)}$$

$$F_L(T) = F_y\left(k_p - 0.3k_y\right) \quad \text{(A-4-8)}$$

$$M_p(T) = Z_x F_y(T) \quad \text{(A-4-9)}$$

$$c_x = 0.53 + \frac{T}{450} \le 3.0 \text{ where } T \text{ is in °F} \quad \text{(A-4-10)}$$

$$c_x = 0.6 + \frac{T}{250} \le 3.0 \text{ where } T \text{ is in °C} \quad \text{(S.I.)} \quad \text{(A-4-10M)}$$

The material properties at elevated temperatures, $E(T)$ and $F_y(T)$, and the k_p and k_y coefficients are calculated in accordance with Table A-4.2.1, and other terms are as defined in Chapter F.

(4) Composite Floor Members

It is permitted to model the thermal response of flexural elements supporting a concrete slab using a one-dimensional heat transfer equation to calculate bottom flange temperature. That temperature shall be taken as constant between the bottom flange and mid-depth of the web and shall decrease linearly by no more than 25% from the mid-depth of the web to the top flange of the *beam*.

The design strength of a *composite* flexural member shall be determined using the provisions of Chapter I, with reduced yield stresses in the steel consistent with the temperature variation described under thermal response.

4.2.4.4. Design Strength

The design strength shall be determined as in Section B3.3. The *nominal strength*, R_n, shall be calculated using material properties, as provided in Section 4.2.3, at the temperature developed by the *design-basis fire*, and as stipulated in this appendix.

4.3. DESIGN BY QUALIFICATION TESTING

4.3.1. Qualification Standards

Structural members and components in steel buildings shall be qualified for the rating period in conformance with ASTM E119. Demonstration of compliance

with these requirements using the procedures specified for steel construction in Section 5 of SEI/ASCE/SFPE Standard 29-05, *Standard Calculation Methods for Structural Fire Protection*, is permitted.

4.3.2. Restrained Construction

For floor and roof assemblies and individual *beams* in buildings, a restrained condition exists when the surrounding or supporting structure is capable of resisting forces and accommodating deformations caused by thermal expansion throughout the range of anticipated *elevated temperatures*.

Steel beams, girders and frames supporting concrete slabs that are welded or bolted to integral framing members shall be considered *restrained construction*.

4.3.3. Unrestrained Construction

Steel *beams*, girders and frames that do not support a concrete slab shall be considered unrestrained unless the members are bolted or welded to surrounding construction that has been specifically designed and detailed to resist effects of *elevated temperatures*.

A steel member bearing on a wall in a single span or at the end span of multiple spans shall be considered unrestrained unless the wall has been designed and detailed to resist effects of thermal expansion.

APPENDIX 5

EVALUATION OF EXISTING STRUCTURES

This appendix applies to the evaluation of the strength and *stiffness* under static vertical (gravity) *loads* of existing structures by *structural analysis*, by load tests or by a combination of structural analysis and load tests when specified by the *engineer of record* or in the contract documents. For such evaluation, the steel grades are not limited to those listed in Section A3.1. This appendix does not address load testing for the effects of seismic loads or moving loads (vibrations).

The Appendix is organized as follows:

5.1. General Provisions
5.2. Material Properties
5.3. Evaluation by Structural Analysis
5.4. Evaluation by Load Tests
5.5. Evaluation Report

5.1. GENERAL PROVISIONS

These provisions shall be applicable when the evaluation of an existing steel structure is specified for (a) verification of a specific set of design loadings or (b) determination of the *available strength* of a *force* resisting member or system. The evaluation shall be performed by *structural analysis* (Section 5.3), by *load* tests (Section 5.4), or by a combination of structural analysis and load tests, as specified in the contract documents. Where load tests are used, the *engineer of record* shall first analyze the applicable parts of the structure, prepare a testing plan, and develop a written procedure to prevent excessive permanent deformation or catastrophic collapse during testing.

5.2. MATERIAL PROPERTIES

1. Determination of Required Tests

The *engineer of record* shall determine the specific tests that are required from Sections 5.2.2 through 5.2.6 and specify the locations where they are required. Where available, the use of applicable project records shall be permitted to reduce or eliminate the need for testing.

2. Tensile Properties

Tensile properties of members shall be considered in evaluation by *structural analysis* (Section 5.3) or *load* tests (Section 5.4). Such properties shall include the *yield stress*, *tensile strength* and *percent elongation*. Where available, certified material test reports or certified reports of tests made by the fabricator or a testing laboratory in accordance with ASTM A6/A6M or A568/A568M, as applicable, shall be permit-

ted for this purpose. Otherwise, tensile tests shall be conducted in accordance with ASTM A370 from samples cut from components of the structure.

3. Chemical Composition

Where welding is anticipated for repair or modification of existing structures, the chemical composition of the steel shall be determined for use in preparing a welding procedure specification (WPS). Where available, results from certified material test reports or certified reports of tests made by the fabricator or a testing laboratory in accordance with ASTM procedures shall be permitted for this purpose. Otherwise, analyses shall be conducted in accordance with ASTM A751 from the samples used to determine tensile properties, or from samples taken from the same locations.

4. Base Metal Notch Toughness

Where welded tension *splices* in heavy shapes and plates as defined in Section A3.1d are critical to the performance of the structure, the Charpy V-*notch toughness* shall be determined in accordance with the provisions of Section A3.1d. If the notch toughness so determined does not meet the provisions of Section A3.1d, the *engineer of record* shall determine if remedial actions are required.

5. Weld Metal

Where structural performance is dependent on existing welded *connections*, representative samples of *weld metal* shall be obtained. Chemical analysis and mechanical tests shall be made to characterize the weld metal. A determination shall be made of the magnitude and consequences of imperfections. If the requirements of AWS D1.1/D1.1M are not met, the *engineer of record* shall determine if remedial actions are required.

6. Bolts and Rivets

Representative samples of bolts shall be inspected to determine markings and classifications. Where bolts cannot be properly identified visually, representative samples shall be removed and tested to determine *tensile strength* in accordance with ASTM F606 or ASTM F606M and the bolt classified accordingly. Alternatively, the assumption that the bolts are ASTM A307 shall be permitted. Rivets shall be assumed to be ASTM A502, Grade 1, unless a higher grade is established through documentation or testing.

5.3. EVALUATION BY STRUCTURAL ANALYSIS

1. Dimensional Data

All dimensions used in the evaluation, such as spans, *column* heights, member spacings, *bracing* locations, cross section dimensions, thicknesses, and *connection* details, shall be determined from a field survey. Alternatively, when available, it shall be permitted to determine such dimensions from applicable project design or shop drawings with field verification of critical values.

2. Strength Evaluation

Forces (*load effects*) in members and connections shall be determined by *structural analysis* applicable to the type of structure evaluated. The load effects shall be determined for the static vertical (gravity) *loads* and *factored load* combinations stipulated in Section B2.

The *available strength* of members and connections shall be determined from applicable provisions of Chapters B through K of this Specification.

3. Serviceability Evaluation

Where required, the deformations at *service loads* shall be calculated and reported.

5.4. EVALUATION BY LOAD TESTS

1. Determination of Load Rating by Testing

To determine the *load* rating of an existing floor or roof structure by testing, a test load shall be applied incrementally in accordance with the *engineer of record's* plan. The structure shall be visually inspected for signs of distress or imminent failure at each load level. Appropriate measures shall be taken if these or any other unusual conditions are encountered.

The tested strength of the structure shall be taken as the maximum applied test load plus the in-situ dead load. The live load rating of a floor structure shall be determined by setting the tested strength equal to $1.2D + 1.6L$, where D is the nominal dead load and L is the nominal live load rating for the structure. The nominal live load rating of the floor structure shall not exceed that which can be calculated using applicable provisions of the specification. For roof structures, L_r, S or R as defined in ASCE/SEI 7, shall be substituted for L. More severe *load combinations* shall be used where required by *applicable building codes*.

Periodic unloading shall be considered once the *service load* level is attained and after the onset of inelastic structural behavior is identified to document the amount of permanent set and the magnitude of the inelastic deformations. Deformations of the structure, such as member deflections, shall be monitored at critical locations during the test, referenced to the initial position before loading. It shall be demonstrated that the deformation of the structure does not increase by more than 10% during a one-hour holding period under sustained, maximum test load. It is permissible to repeat the sequence if necessary to demonstrate compliance.

Deformations of the structure shall also be recorded 24 hours after the test loading is removed to determine the amount of permanent set. Because the amount of acceptable permanent deformation depends on the specific structure, no limit is specified for permanent deformation at maximum loading. Where it is not feasible to load test the entire structure, a segment or zone of not less than one complete bay, representative of the most critical conditions, shall be selected.

2. Serviceability Evaluation

When *load* tests are prescribed, the structure shall be loaded incrementally to the *service load* level. Deformations shall be monitored during a one hour holding period under sustained service test load. The structure shall then be unloaded and the deformation recorded.

5.5. EVALUATION REPORT

After the evaluation of an existing structure has been completed, the *engineer of record* shall prepare a report documenting the evaluation. The report shall indicate whether the evaluation was performed by *structural analysis*, by *load* testing, or by a combination of structural analysis and load testing. Furthermore, when testing is performed, the report shall include the loads and load combination used and the load-deformation and time-deformation relationships observed. All relevant information obtained from *design drawings*, material test reports, and auxiliary material testing shall also be reported. Finally, the report shall indicate whether the structure, including all members and *connections*, is adequate to withstand the *load effects*.

APPENDIX 6

STABILITY BRACING FOR COLUMNS AND BEAMS

This appendix addresses the minimum strength and *stiffness* necessary to provide a braced point in a *column*, *beam* or *beam-column*.

The appendix is organized as follows:

6.1. General Provisions
6.2. Column Bracing
6.3. Beam Bracing
6.4. Beam-Column Bracing

User Note: The *stability* requirements for braced-frame systems are provided in Chapter C. The provisions in this appendix apply to *bracing* that is provided to stabilize individual columns, beams and beam-columns.

6.1. GENERAL PROVISIONS

Columns with end and intermediate braced points designed to meet the requirements in Section 6.2 are permitted to be designed based on the *unbraced length*, L, between the braced points with an *effective length factor*, $K = 1.0$. *Beams* with intermediate braced points designed to meet the requirements in Section 6.3 are permitted to be designed based on the unbraced length, L_b, between the braced points.

When *bracing* is perpendicular to the members to be braced, the equations in Sections 6.2 and 6.3 shall be used directly. When bracing is oriented at an angle to the member to be braced, these equations shall be adjusted for the angle of inclination. The evaluation of the *stiffness* furnished by a brace shall include its member and geometric properties, as well as the effects of *connections* and anchoring details.

User Note: In this appendix, relative and nodal bracing systems are addressed for columns and for beams with *lateral bracing*. For beams with *torsional bracing*, nodal and continuous bracing systems are addressed.

A *relative brace* controls the movement of the braced point with respect to adjacent braced points. A *nodal brace* controls the movement at the braced point without direct interaction with adjacent braced points. A continuous bracing system consists of bracing that is attached along the entire member length; however, nodal bracing systems with a regular spacing can also be modeled as a continuous system.

The *available strength* and stiffness of the bracing members and connections shall equal or exceed the *required strength* and stiffness, respectively, unless analysis indicates that smaller values are justified. A *second-order analysis* that includes the

initial out-of-straightness of the member to obtain brace strength and stiffness requirements is permitted in lieu of the requirements of this appendix.

6.2. COLUMN BRACING

It is permitted to brace an individual *column* at end and intermediate points along the length using either relative or nodal *bracing*.

1. Relative Bracing

The *required strength* is

$$P_{rb} = 0.004P_r \tag{A-6-1}$$

The required *stiffness* is

$$\beta_{br} = \frac{1}{\phi}\left(\frac{2P_r}{L_b}\right) \text{ (LRFD)} \qquad \beta_{br} = \Omega\left(\frac{2P_r}{L_b}\right) \text{ (ASD)} \tag{A-6-2}$$

where

$$\phi = 0.75 \text{ (LRFD)} \qquad \Omega = 2.00 \text{ (ASD)}$$

L_b = *unbraced length*, in. (mm)

For design according to Section B3.3 (LRFD)

P_r = required strength in axial compression using *LRFD load combination*s, kips (N)

For design according to Section B3.4 (ASD)

P_r = required strength in axial compression using *ASD load combinations*, kips (N)

2. Nodal Bracing

The *required strength* is

$$P_{rb} = 0.01P_r \tag{A-6-3}$$

The required *stiffness* is

$$\beta_{br} = \frac{1}{\phi}\left(\frac{8P_r}{L_b}\right) \text{ (LRFD)} \qquad \beta_{br} = \Omega\left(\frac{8P_r}{L_b}\right) \text{ (ASD)} \tag{A-6-4}$$

User Note: These equations correspond to the assumption that *nodal braces* are equally spaced along the *column*.

where

$$\phi = 0.75 \text{ (LRFD)} \qquad \Omega = 2.00 \text{ (ASD)}$$

For design according to Section B3.3 (LRFD)

P_r = required strength in axial compression using *LRFD load combination*s, kips (N)

For design according to Section B3.4 (ASD)

P_r = required strength in axial compression using *ASD load combinations*, kips (N)

In Equation A-6-4, L_b need not be taken less than the maximum *effective length*, KL, permitted for the column based upon the required axial strength, P_r.

6.3. BEAM BRACING

Beams and trusses shall be restrained against rotation about their longitudinal axis at points of support. When a braced point is assumed in the design between points of support, *lateral bracing*, *torsional bracing*, or a combination of the two shall be provided to prevent the relative displacement of the top and bottom flanges (i.e., to prevent twist). In members subject to *double curvature* bending, the inflection point shall not be considered a braced point unless *bracing* is provided at that location.

1. Lateral Bracing

Lateral bracing shall be attached at or near the *beam* compression flange, except as follows:

(1) At the free end of a cantilevered beam, lateral bracing shall be attached at or near the top (tension) flange.
(2) For braced beams subject to *double curvature* bending, lateral bracing shall be attached to both flanges at the braced point nearest the inflection point.

1a. Relative Bracing

The *required strength* is

$$P_{rb} = 0.008 M_r C_d / h_o \qquad \text{(A-6-5)}$$

The required *stiffness* is

$$\beta_{br} = \frac{1}{\phi}\left(\frac{4 M_r C_d}{L_b h_o}\right) \text{ (LRFD)} \qquad \beta_{br} = \Omega\left(\frac{4 M_r C_d}{L_b h_o}\right) \text{ (ASD)} \qquad \text{(A-6-6)}$$

where

$$\phi = 0.75 \text{ (LRFD)} \qquad \Omega = 2.00 \text{ (ASD)}$$

C_d = 1.0 except in the following case;
= 2.0 for the brace closest to the inflection point in a *beam* subject to *double curvature* bending
h_o = distance between flange centroids, in. (mm)

For design according to Section B3.3 (LRFD)

M_r = *required flexural strength* using *LRFD load combinations*, kip-in. (N-mm)

For design according to Section B3.4 (ASD)

M_r = required flexural strength using *ASD load combinations*, kip-in. (N-mm)

1b. Nodal Bracing

The required strength is

$$P_{rb} = 0.02 M_r C_d / h_o \qquad \text{(A-6-7)}$$

The required stiffness is

$$\beta_{br} = \frac{1}{\phi}\left(\frac{10 M_r C_d}{L_b h_o}\right) \text{ (LRFD)} \qquad \beta_{br} = \Omega\left(\frac{10 M_r C_d}{L_b h_o}\right) \text{ (ASD)} \qquad \text{(A-6-8)}$$

where

$$\phi = 0.75 \text{ (LRFD)} \qquad \Omega = 2.00 \text{ (ASD)}$$

For design according to Section B3.3 (LRFD)

M_r = required flexural strength using *LRFD load combinations*, kip-in. (N-mm)

For design according to Section B3.4 (ASD)

M_r = required flexural strength using *ASD load combinations*, kip-in. (N-mm)

In Equation A-6-8, L_b need not be taken less than the maximum *unbraced length* permitted for the *beam* based upon the flexural required strength, M_r.

2. Torsional Bracing

It is permitted to attach *torsional bracing* at any cross-sectional location, and it need not be attached near the compression flange.

User Note: Torsional bracing can be provided with a moment-connected *beam*, cross-frame, or other *diaphragm* element.

2a. Nodal Bracing

The *required strength* is

$$M_{rb} = \frac{0.024 M_r L}{n C_b L_b} \qquad \text{(A-6-9)}$$

The required *stiffness* of the brace is

$$\beta_{Tb} = \frac{\beta_T}{\left(1 - \frac{\beta_T}{\beta_{sec}}\right)} \qquad \text{(A-6-10)}$$

where

$$\beta_T = \frac{1}{\phi}\left(\frac{2.4 L M_r^2}{n E I_y C_b^2}\right) \text{ (LRFD)} \qquad \beta_T = \Omega\left(\frac{2.4 L M_r^2}{n E I_y C_b^2}\right) \text{ (ASD)} \qquad \text{(A-6-11)}$$

$$\beta_{sec} = \frac{3.3E}{h_o}\left(\frac{1.5h_o t_w^3}{12} + \frac{t_{st} b_s^3}{12}\right) \quad \text{(A-6-12)}$$

where

$$\phi = 0.75 \text{ (LRFD)} \qquad \Omega = 3.00 \text{ (ASD)}$$

User Note: $\Omega = 1.5^2/\phi = 3.00$ in Equation A-6-11 because the moment term is squared.

C_b = modification factor defined in Chapter F
E = modulus of elasticity of steel = 29,000 ksi (200 000 MPa)
I_y = out-of-plane moment of inertia, in.^{4} (mm^4)
L = length of span, in. (mm)
b_s = *stiffener* width for one-sided stiffeners, in. (mm)
= twice the individual stiffener width for pairs of stiffeners, in. (mm)
n = number of nodal braced points within the span
t_w = thickness of *beam* web, in. (mm)
t_{st} = thickness of web stiffener, in. (mm)
β_T = overall brace system stiffness, kip-in./rad (N-mm/rad)
β_{sec} = web *distortional stiffness*, including the effect of web *transverse stiffeners*, if any, kip-in./rad (N-mm/rad)

User Note: If $\beta_{sec} < \beta_T$, Equation A-6-10 is negative, which indicates that torsional beam *bracing* will not be effective due to inadequate web distortional stiffness.

For design according to Section B3.3 (LRFD)
M_r = required flexural strength using *LRFD load combination*s, kip-in. (N-mm)

For design according to Section B3.4 (ASD)
M_r = required flexural strength using *ASD load combination*s, kip-in. (N-mm)

When required, the web stiffener shall extend the full depth of the braced member and shall be attached to the flange if the torsional brace is also attached to the flange. Alternatively, it shall be permissible to stop the stiffener short by a distance equal to $4t_w$ from any beam flange that is not directly attached to the torsional brace.

In Equation A-6-9, L_b need not be taken less than the maximum *unbraced length* permitted for the beam based upon the required flexural strength, M_r.

2b. Continuous Bracing

For continuous *bracing*, Equations A-6-9 and A-6-10 shall be used with the following modifications:

(1) $L/n = 1.0$
(2) L_b shall be taken equal to the maximum *unbraced length* permitted for the *beam* based upon the required flexural strength, M_r

(3) The web *distortional stiffness* shall be taken as:

$$\beta_{sec} = \frac{3.3Et_w^3}{12h_o} \quad \text{(A-6-13)}$$

6.4. BEAM-COLUMN BRACING

For *bracing* of *beam-columns*, the *required strength* and *stiffness* for the axial force shall be determined as specified in Section 6.2, and the required strength and stiffness for the flexure shall be determined as specified in Section 6.3. The values so determined shall be combined as follows:

(a) When relative *lateral bracing* is used, the required strength shall be taken as the sum of the values determined using Equations A-6-1 and A-6-5, and the required stiffness shall be taken as the sum of the values determined using Equations A-6-2 and A-6-6.

(b) When nodal lateral bracing is used, the required strength shall be taken as the sum of the values determined using Equations A-6-3 and A-6-7, and the required stiffness shall be taken as the sum of the values determined using Equations A-6-4 and A-6-8. In Equations A-6-4 and A-6-8, L_b for beam-columns shall be taken as the actual *unbraced length*; the provisions in Sections 6.2.2 and 6.3.1b that L_b need not be taken less than the maximum permitted *effective length* based upon P_r and M_r shall not be applied.

(c) When *torsional bracing* is provided for flexure in combination with relative or nodal *bracing* for the axial force, the required strength and stiffness shall be combined or distributed in a manner that is consistent with the resistance provided by the element(s) of the actual bracing details.

APPENDIX 7

ALTERNATIVE METHODS OF DESIGN FOR STABILITY

This appendix presents alternatives to the *direct analysis method* of design for *stability* defined in Chapter C. The two alternative methods covered are the *effective length* method and the *first-order analysis* method.

The appendix is organized as follows:

7.1. General Stability Requirements
7.2. Effective Length Method
7.3. First-Order Analysis Method

7.1. GENERAL STABILITY REQUIREMENTS

The general requirements of Section C1 shall apply. As an alternative to the *direct analysis method* (defined in Sections C1 and C2), it is permissible to design structures for *stability* in accordance with either the *effective length* method, specified in Section 7.2, or the *first-order analysis* method, specified in Section 7.3, subject to the limitations indicated in those sections.

7.2. EFFECTIVE LENGTH METHOD

1. Limitations

The use of the *effective length* method shall be limited to the following conditions:

(1) The structure supports *gravity loads* primarily through nominally vertical *columns*, walls or frames.
(2) The ratio of maximum second-order *drift* to maximum first-order drift (both determined for *LRFD load combinations* or 1.6 times *ASD load combinations*) in all stories is equal to or less than 1.5.

User Note: The ratio of second-order drift to first-order drift in a story may be taken as the B_2 multiplier, calculated as specified in Appendix 8.

2. Required Strengths

The *required strengths* of components shall be determined from analysis conforming to the requirements of Section C2.1, except that the *stiffness* reduction indicated in Section C2.3 shall not be applied; the nominal stiffnesses of all *structural steel* components shall be used. *Notional loads* shall be applied in the analysis in accordance with Section C2.2b.

User Note: Since the condition specified in Section C2.2b(4) will be satisfied in all cases where the effective length method is applicable, the notional load need only be applied in gravity-only load cases.

3. Available Strengths

The *available strengths* of members and connections shall be calculated in accordance with the provisions of Chapters D, E, F, G, H, I, J and K, as applicable.

The *effective length factor*, K, of members subject to compression shall be taken as specified in (a) or (b), below, as applicable.

(a) In *braced frame* systems, *shear wall* systems, and other *structural systems* where lateral *stability* and resistance to *lateral loads* does not rely on the flexural *stiffness* of *columns*, the effective length factor, K, of members subject to compression shall be taken as 1.0, unless rational analysis indicates that a lower value is appropriate.

(b) In *moment frame* systems and other structural systems in which the flexural stiffnesses of columns are considered to contribute to lateral stability and resistance to lateral loads, the effective length factor, K, or elastic critical *buckling* stress, F_e, of those columns whose flexural stiffnesses are considered to contribute to lateral stability and resistance to lateral loads shall be determined from a *sidesway buckling* analysis of the structure; K shall be taken as 1.0 for columns whose flexural stiffnesses are not considered to contribute to lateral stability and resistance to lateral loads.

Exception: It is permitted to use $K = 1.0$ in the design of all columns if the ratio of maximum second-order *drift* to maximum first-order drift (both determined for *LRFD load combinations* or 1.6 times *ASD load combinations*) in all stories is equal to or less than 1.1.

User Note: Methods of calculating the effective length factor, K, are discussed in the *Commentary*.

Bracing intended to define the *unbraced lengths* of members shall have sufficient stiffness and strength to control member movement at the braced points.

User Note: Methods of satisfying the bracing requirement are provided in Appendix 6. The requirements of Appendix 6 are not applicable to bracing that is included in the analysis of the overall structure as part of the overall force-resisting system.

7.3. FIRST-ORDER ANALYSIS METHOD

1. Limitations

The use of the *first-order analysis* method shall be limited to the following conditions:

(1) The structure supports *gravity loads* primarily through nominally vertical *columns*, walls or frames.

(2) The ratio of maximum second-order *drift* to maximum first-order drift (both determined for *LRFD load combinations* or 1.6 times *ASD load combinations*) in all stories is equal to or less than 1.5.

User Note: The ratio of second-order drift to first-order drift in a story may be taken as the B_2 multiplier, calculated as specified in Appendix 8.

(3) The *required axial compressive strengths* of all members whose flexural *stiffnesses* are considered to contribute to the lateral *stability* of the structure satisfy the limitation:

$$\alpha P_r \le 0.5 P_y \qquad \text{(A-7-1)}$$

where

α = 1.0 (LRFD); α = 1.6 (ASD)

P_r = required axial compressive strength under LRFD or ASD load combinations, kips (N)

$P_y = F_y A$ = axial *yield strength*, kips (N)

2. Required Strengths

The *required strengths* of components shall be determined from a *first-order analysis*, with additional requirements (1) and (2) below. The analysis shall consider flexural, shear and axial member deformations, and all other deformations that contribute to displacements of the structure.

(1) All load combinations shall include an additional *lateral load*, N_i, applied in combination with other loads at each level of the structure:

$$N_i = 2.1\alpha(\Delta/L)Y_i \ge 0.0042 Y_i \qquad \text{(A-7-2)}$$

where

α = 1.0 (LRFD); α = 1.6 (ASD)

Y_i = *gravity load* applied at level i from the *LRFD load combination* or *ASD load combination*, as applicable, kips (N)

Δ/L = maximum ratio of Δ to L for all stories in the structure

Δ = first-order interstory *drift* due to the LRFD or ASD load combination, as applicable, in. (mm). Where Δ varies over the plan area of the structure, Δ shall be the average drift weighted in proportion to vertical *load* or, alternatively, the maximum drift.

L = height of story, in. (mm)

The additional lateral load at any level, N_i, shall be distributed over that level in the same manner as the gravity load at the level. The additional lateral loads shall be applied in the direction that provides the greatest destabilizing effect.

User Note: For most building structures, the requirement regarding the direction of N_i may be satisfied as follows: For load combinations that do not include lateral loading, consider two alternative orthogonal directions for the additional lateral load, in a positive and a negative sense in each of the two directions, same direction at all levels; for load combinations that include lateral loading, apply all the additional lateral loads in the direction of the resultant of all lateral loads in the combination.

(2) The nonsway amplification of *beam-column* moments shall be considered by applying the B_1 amplifier of Appendix 8 to the total member moments.

User Note: Since there is no second-order analysis involved in the first-order analysis method for design by ASD, it is not necessary to amplify ASD load combinations by 1.6 before performing the analysis, as required in the *direct analysis method* and the *effective length* method.

3. Available Strengths

The *available strengths* of members and connections shall be calculated in accordance with the provisions of Chapters D, E, F, G, H, I, J and K, as applicable.

The *effective length factor*, K, of all members shall be taken as unity.

Bracing intended to define the *unbraced lengths* of members shall have sufficient *stiffness* and strength to control member movement at the braced points.

User Note: Methods of satisfying this requirement are provided in Appendix 6. The requirements of Appendix 6 are not applicable to bracing that is included in the analysis of the overall structure as part of the overall force-resisting system.

APPENDIX 8

APPROXIMATE SECOND-ORDER ANALYSIS

This appendix provides, as an alternative to a rigorous second-order analysis, a procedure to account for second-order effects in structures by amplifying the *required strengths* indicated by a *first-order analysis*.

The appendix is organized as follows:

8.1. Limitations
8.2. Calculation Procedure

8.1. LIMITATIONS

The use of this procedure is limited to structures that support *gravity loads* primarily through nominally vertical *columns*, walls or frames, except that it is permissible to use the procedure specified for determining *P*-δ *effects* for any individual compression member.

8.2. CALCULATION PROCEDURE

The *required second-order flexural strength*, M_r, and axial strength, P_r, of all members shall be determined as follows:

$$M_r = B_1 M_{nt} + B_2 M_{lt} \quad \text{(A-8-1)}$$

$$P_r = P_{nt} + B_2 P_{lt} \quad \text{(A-8-2)}$$

where

B_1 = multiplier to account for *P*-δ *effects*, determined for each member subject to compression and flexure, and each direction of bending of the member in accordance with Section 8.2.1. B_1 shall be taken as 1.0 for members not subject to compression.

B_2 = multiplier to account for *P*-Δ *effects*, determined for each story of the structure and each direction of lateral translation of the story in accordance with Section 8.2.2

M_{lt} = first-order moment using LRFD or ASD load combinations, due to lateral translation of the structure only, kip-in. (N-mm)

M_{nt} = first-order moment using LRFD or ASD load combinations, with the structure restrained against lateral translation, kip-in. (N-mm)

M_r = required second-order flexural strength using *LRFD* or *ASD load combinations*, kip-in. (N-mm)

P_{lt} = first-order axial force using LRFD or ASD load combinations, due to lateral translation of the structure only, kips (N)

P_{nt} = first-order axial force using LRFD or ASD load combinations, with the structure restrained against lateral translation, kips (N)

P_r = required second-order axial strength using LRFD or ASD load combinations, kips (N)

User Note: Equations A-8-1 and A-8-2 are applicable to all members in all structures. Note, however, that B_1 values other than unity apply only to moments in *beam-columns*; B_2 applies to moments and axial forces in components of the *lateral force resisting system* (including *columns*, beams, *bracing* members and *shear walls*). See Commentary for more on the application of Equations A-8-1and A-8-2.

1. Multiplier B_1 for P-δ Effects

The B_1 multiplier for each member subject to compression and each direction of bending of the member is calculated as follows:

$$B_1 = \frac{C_m}{1-\alpha P_r / P_{e1}} \geq 1 \tag{A-8-3}$$

where

α = 1.00 (LRFD); α = 1.60 (ASD)

C_m = coefficient assuming no lateral translation of the frame determined as follows:

(a) For *beam-columns* not subject to transverse loading between supports in the plane of bending

$$C_m = 0.6 - 0.4(M_1/M_2) \tag{A-8-4}$$

where M_1 and M_2, calculated from a *first-order analysis*, are the smaller and larger moments, respectively, at the ends of that portion of the member unbraced in the plane of bending under consideration. M_1/M_2 is positive when the member is bent in *reverse curvature*, negative when bent in *single curvature*.

(b) For beam-columns subject to transverse loading between supports, the value of C_m shall be determined either by analysis or conservatively taken as 1.0 for all cases.

P_{e1} = elastic critical *buckling strength* of the member in the plane of bending, calculated based on the assumption of no lateral translation at the member ends, kips (N)

$$P_{e1} = \frac{\pi^2 EI^*}{(K_1 L)^2} \tag{A-8-5}$$

where

EI^* = flexural rigidity required to be used in the analysis (= $0.8\tau_b EI$ when used in the *direct analysis method* where τ_b is as defined in Chapter C; = EI for the effective length and first-order analysis methods)

E = modulus of elasticity of steel = 29,000 ksi (200 000 MPa)

I = moment of inertia in the plane of bending, in.^{4} (mm^4)
L = length of member, in. (mm)
K_1 = *effective length factor* in the plane of bending, calculated based on the assumption of no lateral translation at the member ends, set equal to 1.0 unless analysis justifies a smaller value

It is permitted to use the first-order estimate of P_r (i.e., $P_r = P_{nt} + P_{lt}$) in Equation A-8-3.

2. Multiplier B_2 for P-Δ Effects

The B_2 multiplier for each story and each direction of lateral translation is calculated as follows:

$$B_2 = \frac{1}{1 - \frac{\alpha P_{story}}{P_{e\,story}}} \geq 1 \qquad \text{(A-8-6)}$$

where

α = 1.00 (LRFD); α = 1.60 (ASD)
P_{story} = total vertical *load* supported by the story using *LRFD* or *ASD load combinations*, as applicable, including loads in *columns* that are not part of the *lateral force resisting system*, kips (N)
$P_{e\,story}$ = elastic critical *buckling strength* for the story in the direction of translation being considered, kips (N), determined by *sidesway buckling* analysis or as:

$$P_{e\,story} = R_M \frac{HL}{\Delta_H} \qquad \text{(A-8-7)}$$

where

$R_M = 1 - 0.15\,(P_{mf}/P_{story})$ (A-8-8)
L = height of story, in. (mm)
P_{mf} = total vertical load in columns in the story that are part of *moment frames*, if any, in the direction of translation being considered (= 0 for *braced frame* systems), kips (N)
Δ_H = first-order interstory *drift*, in the direction of translation being considered, due to lateral forces, in. (mm), computed using the *stiffness* required to be used in the analysis (stiffness reduced as provided in Section C2.3 when the *direct analysis method* is used). Where Δ_H varies over the plan area of the structure, it shall be the average drift weighted in proportion to vertical load or, alternatively, the maximum drift.
H = story shear, in the direction of translation being considered, produced by the lateral forces used to compute Δ_H, kips (N)

User Note: H and Δ_H in Equation A-8-7 may be based on any lateral loading that provides a representative value of story lateral stiffness, H/Δ_H.

COMMENTARY

on the Specification for Structural Steel Buildings

June 22, 2010

(The Commentary is not a part of ANSI/AISC 360-10, *Specification for Structural Steel Buildings*, but is included for informational purposes only.)

INTRODUCTION

The Specification is intended to be complete for normal design usage.

The Commentary furnishes background information and references for the benefit of the design professional seeking further understanding of the basis, derivations and limits of the Specification.

The Specification and Commentary are intended for use by design professionals with demonstrated engineering competence.

COMMENTARY SYMBOLS

The Commentary uses the following symbols in addition to the symbols defined in the Specification. The section number in the right-hand column refers to the Commentary section where the symbol is first used.

Symbol	Definition	Section
A	Angle cross-sectional area, in.^{2} (mm^2)	G4
B	Overall width of rectangular HSS, in. (mm)	I3
C_f	Compression force in concrete slab for fully composite beam; smaller of F_yA_s and $0.85f'_cA_c$, kips (N)	I3.2
F_y	Reported yield stress, ksi (MPa)	App. 5.2.2
F_{ys}	Static yield stress, ksi (MPa)	App. 5.2.2
H	Overall height of rectangular HSS, in. (mm)	I3
H	Anchor height, in. (mm)	I8.2b
I_g	Moment of inertia of gross concrete section about centroidal axis, neglecting reinforcement, in.^{4} (mm^4)	I2.1b
I_{LB}	Lower bound moment of inertia, in.^{4} (mm^4)	I3.2
I_{pos}	Effective moment of inertia for positive moment, in.^{4} (mm^4)	I3.2
I_{neg}	Effective moment of inertia for negative moment, in.^{4} (mm^4)	I3.2
I_s	Moment of inertia for the structural steel section, in.^{4} (mm^4)	I3.2
I_{tr}	Moment of inertia for the fully composite uncracked transformed section, in.^{4} (mm^4)	I3.2
$I_{y\ Top}$	Moment of inertia of the top flange about an axis through the web, in.^{4} (mm^4)	F1
I_y	Moment of inertia of the entire section about an axis through the web, in.^{4} (mm^4)	F1
K_S	Secant stiffness, ksi (MPa)	B3.6
M_{CL}	Moment at the middle of the unbraced length, kip-in. (N-mm)	F1
M_S	Moment at service loads, kip-in. (N-mm)	B3.6
M_T	Torsional moment, kip-in. (N-mm)	G4
M_o	Maximum first-order moment within the member due to the transverse loading, kip-in. (N-mm)	App. 8
N	Number of cycles to failure	App. 3.3
Q_m	Mean value of the load effect Q	B3.3
R_{cap}	Minimum rotation capacity	App. 1.2.2
R_m	Mean value of the resistance R	B3.3
S_r	Stress range	App. 3.3
S_s	Section modulus for the structural steel section, referred to the tension flange, in.^{3} (mm^3)	I3.2
S_{tr}	Section modulus for the fully composite uncracked transformed section, referred to the tension flange of the steel section, in.^{3} (mm^3)	I3.2
V_Q	Coefficient of variation of the load effect Q	B3.3

V_R	Coefficient of variation of the resistance R	B3.3
V_b	Component of the shear force parallel to the angle leg with width b and thickness t, kips (N)	G4
a_{cr}	Distance from the compression face to the neutral axis for a slender section, in. (mm)	I3
a_p	Distance from the compression face to the neutral axis for a compact section, in. (mm)	I3
a_y	Distance from the compression face to the neutral axis for a noncompact section, in. (mm)	I3
f_v	Shear stress in angle, ksi (MPa)	G4
k	Plate buckling coefficient characteristic of the type of plate edge-restraint	E7.1
β	Reliability index	B3.3
β_{act}	Actual bracing stiffness provided	App. 6.1
δ_o	Maximum deflection due to transverse loading, in. (mm)	App. 8
ν	Poisson's ratio	E7.1
θ_S	Rotation at service loads, rad	B3.6

COMMENTARY GLOSSARY

The Commentary uses the following terms in addition to the terms defined in the Glossary of the Specification. The terms listed below are *italicized* where they first appear in a chapter in the Commentary text.

Alignment chart. Nomograph for determining the effective length factor, *K,* for some types of columns.

Biaxial bending. Simultaneous bending of a member about two perpendicular axes.

Brittle fracture. Abrupt cleavage with little or no prior ductile deformation.

Column curve. Curve expressing the relationship between axial column strength and slenderness ratio.

Critical load. Load at which a perfectly straight member under compression may either assume a deflected position or may remain undeflected, or a beam under flexure may either deflect and twist out of plane or remain in its in-plane deflected position, as determined by a theoretical stability analysis.

Cyclic load. Repeatedly applied external load that may subject the structure to fatigue.

Drift damage index. Parameter used to measure the potential damage caused by *interstory drift*.

Effective moment of inertia. Moment of inertia of the cross section of a member that remains elastic when partial plastification of the cross section takes place, usually under the combination of *residual stress* and applied stress; also, the moment of inertia based on effective widths of elements that buckle locally; also, the moment of inertia used in the design of partially composite members.

Effective stiffness. Stiffness of a member computed using the *effective moment of inertia* of its cross section.

Fatigue threshold. Stress range at which fatigue cracking will not initiate regardless of the number of cycles of loading.

First-order plastic analysis. Structural analysis based on the assumption of rigid-plastic behavior—in other words, that equilibrium is satisfied throughout the structure and the stress is at or below the yield stress—and in which equilibrium conditions are formulated on the undeformed structure.

Flexible connection. Connection permitting a portion, but not all, of the simple beam rotation of a member end.

Inelastic action. Material deformation that does not disappear on removal of the force that produced it.

Interstory drift. Lateral deflection of a floor relative to the lateral deflection of the floor immediately below, divided by the distance between floors, $(\delta_n - \delta_{n-1})/h$.

Permanent load. Load in which variations over time are rare or of small magnitude. All other *loads* are *variable loads*.

Plastic plateau. Portion of the stress-strain curve for uniaxial tension or compression in which the stress remains essentially constant during a period of substantially increased strain.

Primary member. For ponding analysis, beam or girder that supports the concentrated reactions from the *secondary members* framing into it.

Residual stress. Stress that remains in an unloaded member after it has been formed into a finished product. (Examples of such stresses include, but are not limited to, those induced by cold bending, cooling after rolling, or welding).

Rigid frame. Structure in which connections maintain the angular relationship between beam and column members under load.

Secondary member. For ponding analysis, beam or joist that directly supports the distributed ponding loads on the roof of the structure.

Sidesway. Lateral movement of a structure under the action of lateral loads, unsymmetrical vertical loads or unsymmetrical properties of the structure.

Sidesway buckling. Buckling mode of a multistory frame precipitated by the relative lateral displacements of joints, leading to failure by *sidesway* of the frame.

St. Venant torsion. Portion of the torsion in a member that induces only shear stresses in the member.

Strain hardening. Phenomenon wherein ductile steel, after undergoing considerable deformation at or just above yield point, exhibits the capacity to resist substantially higher loading than that which caused initial yielding.

Stub-column. A short compression test specimen utilizing the complete cross section, sufficiently long to provide a valid measure of the stress-strain relationship as averaged over the cross section, but short enough so that it will not buckle as a column in the elastic or plastic range.

Total building drift. Lateral frame deflection at the top of the most occupied floor divided by the height of the building to that level, Δ/H.

Undercut. Notch resulting from the melting and removal of base metal at the edge of a weld.

Variable load. Load with substantial variation over time.

Warping torsion. Portion of the total resistance to torsion that is provided by resistance to warping of the cross section.

CHAPTER A
GENERAL PROVISIONS

A1. SCOPE

The scope of this Specification is essentially the same as the 2005 *Specification for Structural Steel Buildings* that it replaces, with the exception of a new Chapter N, Quality Control and Quality Assurance.

The basic purpose of the provisions in this Specification is the determination of the nominal and available strengths of the members, connections and other components of steel building structures.

This Specification provides two methods of design:

(1) **Load and Resistance Factor Design (LRFD):** The nominal strength is multiplied by a resistance factor, ϕ, and the resulting design strength is then required to equal or exceed the required strength determined by structural analysis for the appropriate LRFD load combinations specified by the applicable building code.

(2) **Allowable Strength Design (ASD):** The nominal strength is divided by a safety factor, Ω, and the resulting allowable strength is then required to equal or exceed the required strength determined by structural analysis for the appropriate ASD load combinations specified by the applicable building code.

This Specification gives provisions for determining the values of the nominal strengths according to the applicable limit states and lists the corresponding values of the resistance factor, ϕ, and the safety factor, Ω. Nominal strength is usually defined in terms of resistance to a load effect, such as axial force, bending moment, shear or torque, but in some instances it is expressed in terms of a stress. The ASD safety factors are calibrated to give the same structural reliability and the same component size as the LRFD method at a live-to-dead load ratio of 3. The term available strength is used throughout the Specification to denote design strength and allowable strength, as applicable.

This Specification is applicable to both buildings and other structures. Many structures found in petrochemical plants, power plants, and other industrial applications are designed, fabricated and erected in a manner similar to buildings. It is not intended that this Specification address steel structures with vertical and lateral load-resisting systems that are not similar to buildings, such as those constructed of shells or catenary cables.

The Specification may be used for the design of structural steel elements, as defined in the AISC *Code of Standard Practice for Steel Buildings and Bridges* (AISC, 2010a), hereafter referred to as the *Code of Standard Practice*, when used as components of nonbuilding structures or other structures. Engineering judgment must be applied to the Specification requirements when the structural steel elements

are exposed to environmental or service conditions and/or loads not usually applicable to building structures.

The *Code of Standard Practice* defines the practices that are the commonly accepted standards of custom and usage for structural steel fabrication and erection. As such, the *Code of Standard Practice* is primarily intended to serve as a contractual document to be incorporated into the contract between the buyer and seller of fabricated structural steel. Some parts of the *Code of Standard Practice*, however, form the basis for some of the provisions in this Specification. Therefore, the *Code of Standard Practice* is referenced in selected locations in this Specification to maintain the ties between these documents, where appropriate.

The Specification disallows seismic design of buildings and other structures using the provisions of Appendix 1. The *R*-factor specified in ASCE/SEI 7-10 (ASCE, 2010) used to determine the seismic loads is based on a nominal value of system overstrength and ductility that is inherent in steel structures designed by elastic analysis using this Specification. Therefore, it would be inappropriate to take advantage of the additional strength afforded by the inelastic design approach presented in Appendix 1 while simultaneously using the code specified *R*-factor. In addition, the provisions for ductility in Appendix 1 are not fully consistent with the intended levels for seismic design.

A2. REFERENCED SPECIFICATIONS, CODES AND STANDARDS

Section A2 provides references to documents cited in this Specification. Note that not all grades of a particular material specification are necessarily approved for use according to this Specification. For a list of approved materials and grades, see Section A3.

A3. MATERIAL

1. Structural Steel Materials

1a. ASTM Designations

There are hundreds of steel materials and products. This Specification lists those products/materials that are commonly useful to structural engineers and those that have a history of satisfactory performance. Other materials may be suitable for specific applications, but the evaluation of those materials is the responsibility of the engineer specifying them. In addition to typical strength properties, considerations for materials may include but are not limited to strength properties in transverse directions, ductility, formability, soundness, weldability including sensitivity to thermal cycles, notch toughness, and other forms of crack sensitivity, coatings, and corrosivity. Consideration for product form may include material considerations in addition to effects of production, tolerances, testing, reporting and surface profiles.

Hot-Rolled Structural Shapes. The grades of steel approved for use under this Specification, covered by ASTM specifications, extend to a yield stress of 100 ksi (690 MPa). Some of the ASTM specifications specify a minimum yield point, while

others specify a minimum yield strength. The term "yield stress" is used in this Specification as a generic term to denote either the yield point or the yield strength.

It is important to be aware of limitations of availability that may exist for some combinations of strength and size. Not all structural section sizes are included in the various material specifications. For example, the 60 ksi (415 MPa) yield stress steel in the A572/A572M specification includes plate only up to $1^1/_4$ in. (32 mm) in thickness. Another limitation on availability is that even when a product is included in this Specification, it may be infrequently produced by the mills. Specifying these products may result in procurement delays or require ordering large quantities directly from the producing mills. Consequently, it is prudent to check availability before completing the details of a design. The AISC web site provides this information (**www.aisc.org**).

Properties in the direction of rolling are of principal interest in the design of steel structures. Hence, yield stress as determined by the standard tensile test is the principal mechanical property recognized in the selection of the steels approved for use under this Specification. It must be recognized that other mechanical and physical properties of rolled steel, such as anisotropy, ductility, notch toughness, formability, corrosion resistance, etc., may also be important to the satisfactory performance of a structure.

It is not possible to incorporate in the Commentary adequate information to impart full understanding of all factors that might merit consideration in the selection and specification of materials for unique or especially demanding applications. In such a situation the user of the Specification is advised to make use of reference material contained in the literature on the specific properties of concern and to specify supplementary material production or quality requirements as provided for in ASTM material specifications. One such case is the design of highly restrained welded connections (AISC, 1973). Rolled steel is anisotropic, especially insofar as ductility is concerned; therefore, weld contraction strains in the region of highly restrained welded connections may exceed the strength of the material if special attention is not given to material selection, details, workmanship and inspection.

Another special situation is that of fracture control design for certain types of service conditions (AASHTO, 2010). For especially demanding service conditions such as structures exposed to low temperatures, particularly those with impact loading, the specification of steels with superior notch toughness may be warranted. However, for most buildings, the steel is relatively warm, strain rates are essentially static, and the stress intensity and number of cycles of full design stress are low. Accordingly, the probability of fracture in most building structures is low. Good workmanship and good design details incorporating joint geometry that avoids severe stress concentrations are generally the most effective means of providing fracture-resistant construction.

Hollow Structural Sections (HSS). Specified minimum tensile properties are summarized in Table C-A3.1 for various HSS and pipe material specifications and grades. ASTM A53 Grade B is included as an approved pipe material specification because it is the most readily available round product in the United States. Other

TABLE C-A3.1
Minimum Tensile Properties of HSS and Pipe Steels

Specification	Grade	F_y, ksi (MPa)	F_u, ksi (MPa)
ASTM A53	**B**	35 (240)	60 (415)
ASTM A500 (round)	**B** **C**	42 (290) 46 (315)	58 (400) 62 (425)
ASTM A500 (rectangular)	**B** **C**	46 (315) 50 (345)	58 (400) 62 (425)
ASTM A501	**A** **B**	36 (250) 50 (345)	58 (400) 70 (485)
ASTM A618 (round)	**I and II ($t \le 3/4$ in.)** **III**	50 (345) 50 (345)	70 (485) 65 (450)
ASTM A847	**—**	50 (345)	70 (485)
CAN/CSA-G40.20/G40.21	**350W**	51 (350)	65 (450)

North American HSS products that have properties and characteristics that are similar to the approved ASTM products are produced in Canada under the *General Requirements for Rolled or Welded Structural Quality Steel* (CSA, 2004). In addition, pipe is produced to other specifications that meet the strength, ductility and weldability requirements of the materials in Section A3, but may have additional requirements for notch toughness or pressure testing.

Pipe can be readily obtained in ASTM A53 material and round HSS in ASTM A500 Grade B is also common. For rectangular HSS, ASTM A500 Grade B is the most commonly available material and a special order would be required for any other material. Depending upon size, either welded or seamless round HSS can be obtained. In North America, however, all ASTM A500 rectangular HSS for structural purposes are welded. Rectangular HSS differ from box sections in that they have uniform thickness except for some thickening in the rounded corners.

Nominal strengths of direct welded (T, Y & K) connections of HSS have been developed analytically and empirically. Connection deformation is anticipated and is an acceptance limit for connection tests. Ductility is necessary to achieve the expected deformations. The ratio of the specified yield strength to the specified tensile strength (yield/tensile ratio) is one measure of material ductility. Materials in HSS used in connection tests have had a yield/tensile ratio of up to 0.80 and therefore that ratio has been adopted as a limit of applicability for direct welded HSS connections. ASTM A500 Grade A material does not meet this ductility "limit of applicability" for direct connections in Chapter K. ASTM A500 Grade C has a yield/tensile ratio of 0.807 but it is reasonable to use the rounding method described in ASTM E29 and find this material acceptable for use.

Even though ASTM A501 includes rectangular HSS, hot-formed rectangular HSS are not currently produced in the United States. The *General Requirements for Rolled or Welded Structural Quality Steel* (CSA, 2004) includes Class C (cold-formed) and Class H (cold-formed and stress relieved) HSS. Class H HSS have relatively low levels of *residual stress*, which enhances their performance in compression and may provide better ductility in the corners of rectangular HSS.

1c. Rolled Heavy Shapes

The web-to-flange intersection and the web center of heavy hot-rolled shapes, as well as the interior portions of heavy plates, may contain a more coarse grain structure and/or lower notch toughness material than other areas of these products. This is probably caused by ingot segregation, the somewhat lesser deformation during hot rolling, higher finishing temperature, and the slower cooling rate after rolling for these heavy sections. This characteristic is not detrimental to suitability for compression members or for nonwelded members. However, when heavy cross sections are joined by splices or connections using complete-joint-penetration groove welds that extend through the coarser and/or lower notch-tough interior portions, tensile strains induced by weld shrinkage may result in cracking. An example is a complete-joint-penetration groove welded connection of a heavy cross section beam to any column section. When members of lesser thickness are joined by complete-joint-penetration groove welds, which induce smaller weld shrinkage strains, to the finer grained and/or more notch-tough surface material of ASTM A6/A6M shapes and heavy built-up cross sections, the potential for cracking is significantly lower. An example is a complete-joint-penetration groove welded connection of a nonheavy cross section beam to a heavy cross section column.

For critical applications such as primary tension members, material should be specified to provide adequate notch toughness at service temperatures. Because of differences in the strain rate between the Charpy V-notch (CVN) impact test and the strain rate experienced in actual structures, the CVN test is conducted at a temperature higher than the anticipated service temperature for the structure. The location of the CVN test specimens ("alternate core location") is specified in ASTM A6/A6M, Supplemental Requirement S30.

The notch toughness requirements of Section A3.1c are intended only to provide material of reasonable notch toughness for ordinary service applications. For unusual applications and/or low temperature service, more restrictive requirements and/or notch toughness requirements for other section sizes and thicknesses may be appropriate. To minimize the potential for fracture, the notch toughness requirements of Section A3.1c must be used in conjunction with good design and fabrication procedures. Specific requirements are given in Sections J1.5, J1.6, J2.6 and J2.7.

For rotary-straightened W-shapes, an area of reduced notch toughness has been documented in a limited region of the web immediately adjacent to the flange. This region may exist in W-shapes of all weights, not just heavy shapes. Considerations in design and detailing that recognize this situation are presented in Chapter J.

2. Steel Castings and Forgings

There are a number of ASTM specifications for steel castings. The SFSA *Steel Castings Handbook* (SFSA, 1995) recommends ASTM A216 as a product useful for steel structures. In addition to the requirements of this Specification, SFSA recommends that various other requirements be considered for cast steel products. It may be appropriate to inspect the first piece cast using magnetic particle inspection in accordance with ASTM E125, degree 1a, b or c. Radiographic inspection level III may be desirable for critical sections of the first piece cast. Ultrasonic testing (UT) in compliance with ASTM A609/A609M (ASTM, 2007b) may be appropriate for the first cast piece over 6 in. thick. Design approval, sample approval, periodic nondestructive testing of the mechanical properties, chemical testing, and selection of the correct welding specification should be among the issues defined in the selection and procurement of cast steel products. Refer to SFSA (1995) for design information about cast steel products.

3. Bolts, Washers and Nuts

The ASTM standard specification for A307 bolts covers two grades of fasteners (ASTM, 2007c). Either grade may be used under this Specification; however, it should be noted that Grade B is intended for pipe flange bolting and Grade A is the grade long in use for structural applications.

4. Anchor Rods and Threaded Rods

ASTM F1554 is the primary specification for anchor rods. Since there is a limit on the maximum available length of ASTM A325/A325M and ASTM A490/A490M bolts, the attempt to use these bolts for anchor rods with design lengths longer than the maximum available lengths has presented problems in the past. The inclusion of ASTM A449 and A354 materials in this Specification allows the use of higher strength material for bolts longer than ASTM A325/A325M and ASTM A490/A490M bolts.

The engineer of record should specify the required strength for threaded rods used as load-carrying members.

5. Consumables for Welding

The AWS filler metal specifications listed in Section A3.5 are general specifications that include filler metal classifications suitable for building construction, as well as classifications that may not be suitable for building construction. The AWS D1.1/D1.1M, *Structural Welding Code—Steel* (AWS, 2010) lists in Table 3.1 various electrodes that may be used for prequalified welding procedure specifications, for the various steels that are to be joined. This list specifically does not include various classifications of filler metals that are not suitable for structural steel applications. Filler metals listed under the various AWS A5 specifications may or may not have specified notch toughness properties, depending on the specific electrode classification. Section J2.6 identifies certain welded joints where notch toughness of filler metal is needed in building construction. There may be other situations where the

engineer of record may elect to specify the use of filler metals with specified notch toughness properties, such as for structures subject to high loading rate, *cyclic loading,* or seismic loading. Since AWS D1.1/D1.1M does not automatically require that the filler metal used have specified notch toughness properties, it is important that filler metals used for such applications be of an AWS classification where such properties are required. This information can be found in the AWS Filler Metal Specifications and is often contained on the filler metal manufacturer's certificate of conformance or product specification sheets.

When specifying filler metal and/or flux by AWS designation, the applicable standard specifications should be carefully reviewed to assure a complete understanding of the designation reference. This is necessary because the AWS designation systems are not consistent. For example, in the case of electrodes for shielded metal arc welding (AWS A5.1), the first two or three digits indicate the nominal tensile strength classification, in ksi, of the filler metal and the final two digits indicate the type of coating. For metric designations, the first two digits times 10 indicate the nominal tensile strength classification in MPa. In the case of mild steel electrodes for submerged arc welding (AWS A5.17/A5.17M), the first one or two digits times 10 indicate the nominal tensile strength classification for both U.S. customary and metric units, while the final digit or digits times 10 indicate the testing temperature in °F, for filler metal impact tests. In the case of low-alloy steel covered arc welding electrodes (AWS A5.5), certain portions of the designation indicate a requirement for stress relief, while others indicate no stress relief requirement.

Engineers do not, in general, specify the exact filler metal to be employed on a particular structure. Rather, the decision as to which welding process and which filler metal is to be utilized is usually left with the fabricator or erector. Codes restrict the usage of certain filler materials, or impose qualification testing to prove the suitability of the specific electrode, so as to make certain that the proper filler metals are used.

A4. STRUCTURAL DESIGN DRAWINGS AND SPECIFICATIONS

The abbreviated list of requirements in this Specification is intended to be compatible with and a summary of the more extensive requirements in Section 3 of the *Code of Standard Practice*. The user should refer to Section 3 of the *Code of Standard Practice* for further information.

CHAPTER B
DESIGN REQUIREMENTS

B1. GENERAL PROVISIONS

Previous to the 2005 edition, the Specification contained a section entitled "Types of Construction"; for example, Section A2 in the 1999 *Load and Resistance Factor Design Specification for Structural Steel Buildings* (AISC, 2000b), hereafter referred to as the 1999 *LRFD Specification*. In this Specification there is no such section and the requirements related to "types of construction" have been divided between Section B1, Section B3.6 and Section J1.

Historically, "Types of Construction" was the section that established what type of structures the Specification covers. The preface to the 1999 *LRFD Specification* suggested that the purpose of the Specification was "to provide design criteria for routine use and not to provide specific criteria for infrequently encountered problems." The preface to the 1978 *Specification for the Design, Fabrication, and Erection of Structural Steel for Buildings* (AISC, 1978) contained similar language. While "routine use" may be difficult to describe, the contents of "Types of Construction" have been clearly directed at ordinary building frames with beams, columns and connections.

The 1969 *Specification for the Design, Fabrication, and Erection of Structural Steel for Buildings* (AISC, 1969) classified "types of construction" as Type 1, 2 or 3. The primary distinction among these three types of construction was the nature of the connections of the beams to the columns. Type 1 construction referred to "*rigid frames,*" now called moment-resisting frames, which had connections capable of transmitting moment. Type 2 construction referred to "simple frames" with no moment transfer between beams and columns. Type 3 construction utilized "semi-rigid frames" with partially restrained connections. This system was allowed if a predictable and reliable amount of connection flexibility and moment transfer could be documented.

The 1986 *Load and Resistance Factor Design Specification for Structural Steel Buildings* (AISC, 1986) changed the designations from Type 1, 2 or 3 to the designations FR (fully restrained) and PR (partially restrained). In these designations, the term "restraint" refers to the degree of moment transfer and the associated deformation in the connections. The 1986 *LRFD Specification* also used the term "simple framing" to refer to structures with "simple connections," that is, connections with negligible moment transfer. In essence, FR was equivalent to Type 1, "simple framing" was equivalent to Type 2, and PR was equivalent to Type 3 construction.

Type 2 construction of earlier Specifications and "simple framing" of the 1986 *LRFD Specification* had additional provisions that allowed the wind loads to be carried by moment resistance of selected joints of the frame, provided that:

(1) The connections and connected members have capacity to resist the wind moments.
(2) The girders are adequate to carry the full gravity load as "simple beams."
(3) The connections have adequate inelastic rotation capacity to avoid overstress of the fasteners or welds under combined gravity and wind loading.

The concept of "wind connections" as both simple (for gravity loads) and moment resisting (for wind loads) was proposed by Sourochnikoff (1950) and further examined by Disque (1964). The basic proposal asserted that such connections have some moment resistance but that this resistance is low enough under wind load such that the connections would sustain inelastic deformations. Under repeated (cyclic) wind loads, the connection response would appear to reach a condition where the gravity load moments would be very small. The proposal postulated that the elastic resistance of the connections to wind moments would remain the same as the initial resistance, although it is known that many connections do not exhibit a linear elastic initial response. Additional recommendations have been provided by Geschwindner and Disque (2005). More recent research has shown that the AISC direct analysis method, as defined in the 2005 *Specification for Structural Steel Buildings* (AISC, 2005a) and this Specification, is the best approach to cover all relevant response effects (White and Goverdhan, 2008).

Section B1 widens the purview of this Specification to a broader class of construction types. It recognizes that a structural system is a combination of members connected in such a way that the structure can respond in different ways to meet different design objectives under different loads. Even within the purview of ordinary buildings, there can be enormous variety in the design details.

This Specification is meant to be primarily applicable to the common types of building frames with gravity loads carried by beams and girders and lateral loads carried by moment frames, braced frames or shear walls. However, there are many unusual buildings or building-like structures for which this Specification is also applicable. Rather than attempt to establish the purview of the Specification with an exhaustive classification of construction types, Section B1 requires that the design of members and their connections be consistent with the intended use of the structure and the assumptions made in the analysis of the structure.

B2. LOADS AND LOAD COMBINATIONS

The loads and load combinations for use with this Specification are given in the applicable building code. In the absence of an applicable specific local, regional or national building code, the nominal loads (for example, D, L, L_r, S, R, W and E), load factors and load combinations are as specified in ASCE/SEI 7, *Minimum Design Loads for Buildings and Other Structures* (ASCE, 2010). This edition of ASCE/SEI 7 has adopted the seismic design provisions of the NEHRP *Recommended Seismic Provisions for New Buildings and Other Structures* (BSSC, 2009), as have the AISC *Seismic Provisions for Structural Steel Buildings* (AISC, 2010b). The reader is referred to the commentaries of these documents for an expanded discussion on loads, load factors and seismic design.

This Specification is based on strength limit states that apply to structural steel design in general. The Specification permits design for strength using either load and resistance factor design (LRFD) or allowable strength design (ASD). It should be noted that the terms strength and stress reflect whether the appropriate section property has been applied in the calculation of the limit state available strength. In most instances, the Specification uses strength rather than stress in the safety check. In all cases it is a simple matter to recast the provisions in a stress format. The terminology used to describe load combinations in ASCE/SEI 7 is somewhat different from that used by this Specification. Section 2.3 of ASCE/SEI 7 defines Combining Factored Loads Using Strength Design; these combinations are applicable to design using the LRFD approach. Section 2.4 of ASCE/SEI 7 defines Combining Nominal Loads Using Allowable Stress Design; these combinations are applicable to design using the ASD load approach. Both the LRFD and ASD load combinations in the current edition of ASCE/SEI 7 (ASCE, 2010) have been changed from those of previous editions as has the overall treatment of wind loads.

LRFD load combinations. If the LRFD approach is selected, the load combination requirements are defined in Section 2.3 of ASCE/SEI 7.

The load combinations in Section 2.3 of ASCE/SEI 7 are based on modern probabilistic load modeling and a comprehensive survey of reliabilities inherent in traditional design practice (Galambos et al., 1982; Ellingwood et al., 1982). These load combinations utilize a "principal action-companion action format," which is based on the notion that the maximum combined load effect occurs when one of the time-varying loads takes on its maximum lifetime value (principal action) while the other *variable loads* are at "arbitrary point-in-time" values (companion actions), the latter being loads that would be measured in a load survey at any arbitrary time. The dead load, which is considered to be permanent, is the same for all combinations in which the load effects are additive. Research has shown that this approach to load combination analysis is consistent with the manner in which loads actually combine on structural elements and systems in situations in which strength limit states may be approached. The load factors reflect uncertainty in individual load magnitudes and in the analysis that transforms load to load effect. The nominal loads in ASCE/SEI 7 are substantially in excess of the arbitrary point-in-time values. The nominal live, wind and snow loads historically have been associated with mean return periods of approximately 50 years. Wind loads historically have been adjusted upward by a high load factor in previous editions to approximate a longer return period; in the 2010 edition of ASCE/SEI 7 the load factor is 1.0 and the wind-speed maps correspond to return periods deemed appropriate for the design of each occupancy type (approximately 700 years for common occupancies).

The return period associated with earthquake loads has been more complex historically and the approach has been revised in both the 2003 and 2009 editions of the *NEHRP Recommended Seismic Provisions for New Buildings and Other Structures* (BSSC, 2003, 2009). In the 2009 edition, adopted as the basis for ASCE/SEI 7-10, the earthquake loads calculated at most locations are intended to produce a uniform maximum collapse probability of 1% in a 50 year period by integrating the collapse probability (a product of hazard amplitude and an assumed structural fragility) across

all return periods. At some sites in regions of high seismic activity, where high intensity events occur frequently, deterministic limits on the ground motion result in somewhat higher collapse probabilities. Commentary to Chapter 1 of ASCE/SEI 7-10 provides information on the intended maximum probability of structural failure under earthquake and other loads.

Load combinations of ASCE/SEI 7, Section 2.3, which apply specifically to cases in which the structural actions due to lateral forces and gravity loads counteract one another and the dead load stabilizes the structure, incorporate a load factor on dead load of 0.9.

ASD Load Combinations. If the ASD approach is selected, the load combination requirements are defined in Section 2.4 of ASCE/SEI 7.

The load combinations in Section 2.4 of ASCE/SEI 7 are similar to those traditionally used in allowable stress design. In ASD, safety is provided by the safety factor, Ω, and the nominal loads in the basic combinations involving gravity loads, earth pressure or fluid pressure are not factored. The reduction in the combined time-varying load effect in combinations incorporating wind or earthquake load is achieved by the load combination factor 0.75. This load combination factor dates back to the 1972 edition of ANSI Standard A58.1, the predecessor of ASCE/SEI 7. It should be noted that in ASCE/SEI 7, the 0.75 factor applies only to combinations of variable loads; it is irrational to reduce the dead load because it is always present and does not fluctuate in time. It should also be noted that certain ASD load combinations may actually result in a higher required strength than similar load combinations for LRFD. Load combinations that apply specifically to cases in which the structural actions due to lateral forces and gravity loads counteract one another, where the dead load stabilizes the structure, incorporate a load factor on dead load of 0.6. This eliminates a deficiency in the traditional treatment of counteracting loads in allowable stress design and emphasizes the importance of checking stability. The earthquake load effect is multiplied by 0.7 in applicable combinations involving that load to align allowable strength design for earthquake effects with the definition of E in the sections of ASCE/SEI 7 defining Seismic Load Effects and Combinations.

The load combinations in Sections 2.3 and 2.4 of ASCE/SEI 7 apply to design for strength limit states. They do not account for gross error or negligence. Loads and load combinations for nonbuilding structures and other structures may be defined in ASCE/SEI 7 or other applicable industry standards and practices.

B3. DESIGN BASIS

Load and resistance factor design (LRFD) and allowable strength design (ASD) are distinct methods. They are equally acceptable by this Specification, but their provisions are not identical and not interchangeable. Indiscriminate use of combinations of the two methods could result in unpredictable performance or unsafe design. Thus, the LRFD and ASD methods are specified as alternatives. There are, however, circumstances in which the two methods could be used in the design, modification or renovation of a structural system without conflict, such as providing modifications to a structural floor system of an older building after assessing the as-built conditions.

1. Required Strength

This Specification permits the use of elastic, inelastic or plastic structural analysis. Generally, design is performed by elastic analysis. Provisions for inelastic and plastic analysis are given in Appendix 1. The required strength is determined by the appropriate methods of structural analysis.

In some circumstances, as in the proportioning of stability bracing members that carry no calculated forces (see, for example, Appendix 6), the required strength is explicitly stated in this Specification.

2. Limit States

A limit state is a condition in which a structural system or component becomes unfit for its intended purpose (serviceability limit state), or has reached its ultimate load-carrying capacity (strength limit state). Limit states may be dictated by functional requirements, such as maximum deflections or drift; they may be related to structural behavior, such as the formation of a plastic hinge or mechanism; or they may represent the collapse of the whole or part of the structure, such as by instability or fracture. The design provisions in the Specification ensure that the probability of exceeding a limit state is acceptably small by stipulating the combination of load factors, resistance or safety factors, nominal loads and nominal strengths consistent with the design assumptions.

Two kinds of limit states apply to structures: (1) strength limit states, which define safety against local or overall failure conditions during the intended life of the structure; and (2) serviceability limit states, which define functional requirements. This Specification, like other structural design codes, focuses primarily on strength limit states because of overriding considerations of public safety. This does not mean that limit states of serviceability (see Chapter L) are not important to the designer, who must provide for functional performance and economy of design. However, serviceability considerations permit more exercise of judgment on the part of the designer.

Strength limit states vary from element to element, and several limit states may apply to a given element. The most common strength limit states are yielding, buckling and rupture. The most common serviceability limit states include deflections or drift, and vibrations.

Structural integrity provisions that establish minimum requirements for connectivity have been introduced into various building codes. The intent of those provisions is to provide a minimum level of robustness for the structure to enhance its performance under an extraordinary event. The requirements are prescriptive in nature, as the forces generated by the undefined extraordinary event may exceed those due to the minimum nominal loads stipulated by the building code. Unless specifically prohibited by the applicable building code, the full ductile load-deformation (stress-strain) response of steel may be used to calculate the nominal capacity to satisfy nominal strength requirements prescribed for structural integrity.

The performance criteria for structural integrity are different from the traditional design methodology where serviceability and strength limit states, such as limiting

deformation and preventing yielding, often control connection design. Thus, Section B3.2 establishes that limit states checked during design for traditional loads and load combinations involving limiting deformations or yielding of connection components are not necessary for the structural integrity checks. Thus, as examples of the application of these provisions, this section removes the limitation on inelastic yielding of double angles in a beam connection as they tend to straighten when subjected to high axial tension forces or the substantial deformation of bolt holes that might be restricted in traditional connection design.

In addition, this section permits the use of short-slots parallel to the direction of the specified tension force without triggering the slip-critical requirements, contrary to traditional connection design, since movement of the bolt in the slot during an extraordinary event is not detrimental to overall structural performance. In this case, bolts are assumed to be located at the critical end of the slot for all applicable limit states.

Single-plate shear connection design to meet structural integrity requirements is discussed in Geschwindner and Gustafson (2010).

3. Design for Strength Using Load and Resistance Factor Design (LRFD)

Design for strength by LRFD is performed in accordance with Equation B3-1. The left side of Equation B3-1, R_u, represents the required strength computed by structural analysis based on load combinations stipulated in ASCE/SEI 7 (ASCE, 2010), Section 2.3 (or their equivalent), while the right side, ϕR_n, represents the limiting structural resistance, or design strength, provided by the member or element.

The resistance factor, ϕ, in this Specification is equal to or less than 1.0. When compared to the nominal strength, R_n, computed according to the methods given in Chapters D through K, a ϕ of less than 1.0 accounts for approximations in the theory and variations in mechanical properties and dimensions of members and frames. For limit states where $\phi = 1.00$, the nominal strength is judged to be sufficiently conservative when compared to the actual strength that no reduction is needed.

The LRFD provisions are based on: (1) probabilistic models of loads and resistance; (2) a calibration of the LRFD provisions to the 1978 edition of the ASD Specification for selected members; and (3) the evaluation of the resulting provisions by judgment and past experience aided by comparative design office studies of representative structures.

In the probabilistic basis for LRFD (Ravindra and Galambos, 1978; Ellingwood et al., 1982), the load effects, Q, and the resistances, R, are modeled as statistically independent random variables. In Figure C-B3.1, relative frequency distributions for Q and R are portrayed as separate curves on a common plot for a hypothetical case. As long as the resistance, R, is greater than (to the right of) the effects of the loads, Q, a margin of safety for the particular limit state exists. However, because Q and R are random variables, there is a small probability that R may be less than Q. The probability of this limit state is related to the degree of overlap of the frequency distributions in Figure C-B3.1, which depends on the positioning of their mean values (R_m versus Q_m) and their dispersions.

The probability that R is less than Q depends on the distributions of the many variables (material, loads, etc.) that determine resistance and total load effect. Often, only the means and the standard deviations or coefficients of variation of the variables involved in the determination of R and Q can be estimated. However, this information is sufficient to build an approximate design provision that is independent of the knowledge of these distributions, by stipulating the following design condition:

$$\beta\sqrt{V_R^2 + V_Q^2} \le \ln\left(R_m/Q_m\right) \tag{C-B3-1}$$

where

R_m = mean value of the resistance R
Q_m = mean value of the load effect Q
V_R = coefficient of variation of the resistance R
V_Q = coefficient of variation of the load effect Q

For structural elements and the usual loading, R_m, Q_m, and the coefficients of variation, V_R and V_Q, can be estimated, so a calculation of

$$\beta = \frac{\ln\left(R_m / Q_m\right)}{\sqrt{V_R^2 + V_Q^2}} \tag{C-B3-2}$$

will give a comparative measure of reliability of a structure or component. The parameter β is denoted the reliability index. Extensions to the determination of β in Equation C-B3-2 to accommodate additional probabilistic information and more complex design situations are described in Ellingwood et al. (1982) and have been used in the development of the recommended load combinations in ASCE/SEI 7.

The original studies that determined the statistical properties (mean values and coefficients of variation) for the basic material properties and for steel beams, columns, composite beams, plate girders, beam-columns and connection elements that were

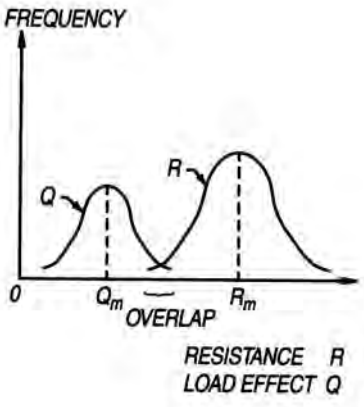

Fig. C-B3.1. Frequency distribution of load effect Q and resistance R.

used to develop the LRFD provisions are presented in a series of eight articles in the September 1978 issue of the *Journal of the Structural Division* (ASCE, Vol. 104, ST9). The corresponding load statistics are given in Galambos et al. (1982). Based on these statistics, the values of β inherent in the 1978 *Specification for the Design, Fabrication, and Erection of Structural Steel for Buildings* (AISC, 1978) were evaluated under different load combinations (live/dead, wind/dead, etc.) and for various tributary areas for typical members (beams, columns, beam-columns, structural components, etc.). As might be expected, there was a considerable variation in the range of β-values. For example, compact rolled beams (flexure) and tension members (yielding) had β-values that decreased from about 3.1 at $L/D = 0.50$ to 2.4 at $L/D = 4$. This decrease is a result of ASD applying the same factor to dead load, which is relatively predictable, and live load, which is more variable. For bolted or welded connections, β was in the range of 4 to 5.

The variation in β that was inherent to ASD is reduced substantially in LRFD by specifying several target β-values and selecting load and resistance factors to meet these targets. The Committee on Specifications set the point at which LRFD is calibrated to ASD at $L/D = 3.0$ for braced compact beams in flexure and tension members at yield. The resistance factor, ϕ, for these limit states is 0.90, and the implied β is approximately 2.6 for members and 4.0 for connections. The larger β-value for connections reflects the complexity in modeling their behavior, effects of workmanship, and the benefit provided by additional strength. Limit states for other members are handled similarly.

The databases on steel strength used in previous editions of the *LRFD Specification for Structural Steel Buildings* were based mainly on research conducted prior to 1970. An important recent study of the material properties of structural shapes (Bartlett et al., 2003) reflected changes in steel production methods and steel materials that have occurred over the past 15 years. This study indicated that the new steel material characteristics did not warrant changes in the ϕ-values.

4. Design for Strength Using Allowable Strength Design (ASD)

The ASD method is provided in this Specification as an alternative to LRFD for use by engineers who prefer to deal with ASD load combinations and allowable stresses in the traditional ASD format. The term “allowable strength” has been introduced to emphasize that the basic equations of structural mechanics that underlie the provisions are the same for LRFD and ASD.

Traditional ASD is based on the concept that the maximum stress in a component shall not exceed a specified allowable stress under normal service conditions. The load effects are determined on the basis of an elastic analysis of the structure, while the allowable stress is the limiting stress (at yielding, instability, rupture, etc.) divided by a safety factor. The magnitude of the safety factor and the resulting allowable stress depend on the particular governing limit state against which the design must produce a certain margin of safety. For any single element, there may be a number of different allowable stresses that must be checked.

The safety factor in traditional ASD provisions was a function of both the material and the component being considered. It may have been influenced by factors such as member length, member behavior, load source and anticipated quality of workmanship. The traditional safety factors were based solely on experience and have remained unchanged for over 50 years. Although ASD-designed structures have performed adequately over the years, the actual level of safety provided was never known. This was a principal drawback of the traditional ASD approach. An illustration of typical performance data is provided in Bjorhovde (1978), where theoretical and actual safety factors for columns are examined.

Design for strength by ASD is performed in accordance with Equation B3-2. The ASD method provided in the Specification recognizes that the controlling modes of failure are the same for structures designed by ASD and LRFD. Thus, the nominal strength that forms the foundation of LRFD is the same nominal strength that provides the foundation for ASD. When considering available strength, the only difference between the two methods is the resistance factor in LRFD, ϕ, and the safety factor in ASD, Ω.

In developing appropriate values of Ω for use in this Specification, the aim was to ensure similar levels of safety and reliability for the two methods. A straightforward approach for relating the resistance factor and the safety factor was developed. As already mentioned, the original LRFD Specification was calibrated to the 1978 *ASD Specification* at a live load to dead load ratio of 3. Thus, by equating the designs for the two methods at a ratio of live-to-dead load of 3, the relationship between ϕ and Ω can be determined. Using the live plus dead load combinations, with $L = 3D$, yields the following relationships.

For design according to Section B3.3 (LRFD):

$$\phi R_n = 1.2D + 1.6L = 1.2D + 1.6(3D) = 6D \qquad \text{(C-B3-3)}$$

$$R_n = \frac{6D}{\phi}$$

For design according to Section B3.4 (ASD):

$$\frac{R_n}{\Omega} = D + L = D + 3D = 4D \qquad \text{(C-B3-4)}$$

$$R_n = \Omega\,(4D)$$

Equating R_n from the LRFD and ASD formulations and solving for Ω yields

$$\Omega = \frac{6D}{\phi}\left(\frac{1}{4D}\right) = \frac{1.5}{\phi} \qquad \text{(C-B3-5)}$$

Throughout the Specification, the values of Ω were obtained from the values of ϕ by Equation C-B3-5.

5. Design for Stability

Section B3.5 provides the charging language for Chapter C on design for stability.

6. Design of Connections

Section B3.6 provides the charging language for Chapter J and Chapter K on the design of connections. Chapter J covers the proportioning of the individual elements of a connection (angles, welds, bolts, etc.) once the load effects on the connection are known. Section B3.6 establishes that the modeling assumptions associated with the structural analysis must be consistent with the conditions used in Chapter J to proportion the connecting elements.

In many situations, it is not necessary to include the connection elements as part of the analysis of the structural system. For example, simple and FR connections may often be idealized as pinned or fixed, respectively, for the purposes of structural analysis. Once the analysis has been completed, the deformations or forces computed at the joints may be used to proportion the connection elements. The classifications of FR (fully restrained) and simple connections are meant to justify these idealizations for analysis with the provision that if, for example, one assumes a connection to be FR for the purposes of analysis, the actual connection must meet the FR conditions. In other words, it must have adequate strength and stiffness, as described in the provisions and discussed below.

In certain cases, the deformation of the connection elements affects the way the structure resists load and hence the connections must be included in the analysis of the structural system. These connections are referred to as partially restrained (PR) moment connections. For structures with PR connections, the connection flexibility must be estimated and included in the structural analysis, as described in the following sections. Once the analysis is complete, the load effects and deformations computed for the connection can be used to check the adequacy of the connecting elements.

For simple and FR connections, the connection proportions are established after the final analysis of the structural design is completed, thereby greatly simplifying the design cycle. In contrast, the design of PR connections (like member selection) is inherently iterative because one must assume values of the connection proportions in order to establish the force-deformation characteristics of the connection needed to perform the structural analysis. The life-cycle performance characteristics must also be considered. The adequacy of the assumed proportions of the connection elements can be verified once the outcome of the structural analysis is known. If the connection elements are inadequate, then the values must be revised and the structural analysis repeated. The potential benefits of using PR connections for various types of framing systems are discussed in the literature.

Connection Classification. The basic assumption made in classifying connections is that the most important behavioral characteristics of the connection can be modeled by a moment-rotation (M-θ) curve. Figure C-B3.2 shows a typical M-θ curve. Implicit in the moment-rotation curve is the definition of the connection as being a region of the column and beam along with the connecting elements. The connection

response is defined this way because the rotation of the member in a physical test is generally measured over a length that incorporates the contributions of not only the connecting elements, but also the ends of the members being connected and the column panel zone.

Examples of connection classification schemes include those in Bjorhovde et al. (1990) and Eurocode 3 (CEN, 2005). These classifications account directly for the stiffness, strength and ductility of the connections.

Connection Stiffness. Because the nonlinear behavior of the connection manifests itself even at low moment-rotation levels, the initial stiffness of the connection (shown in Figure C-B3.2) does not adequately characterize connection response at service levels. Furthermore, many connection types do not exhibit a reliable initial stiffness, or it exists only for a very small moment-rotation range. The secant stiffness, K_S, at service loads is taken as an index property of connection stiffness. Specifically,

$$K_S = M_S/\theta_S \tag{C-B3-6}$$

where

M_S = moment at service loads, kip-in. (N-mm)
θ_S = rotation at service loads, rad

In the discussion below, L and EI are the length and bending rigidity, respectively, of the beam.

If $K_SL/EI \geq 20$, it is acceptable to consider the connection to be fully restrained (in other words, able to maintain the angles between members). If $K_SL/EI \leq 2$, it is acceptable to consider the connection to be simple (in other words, it rotates without developing moment). Connections with stiffnesses between these two limits are partially restrained and the stiffness, strength and ductility of the connection must be

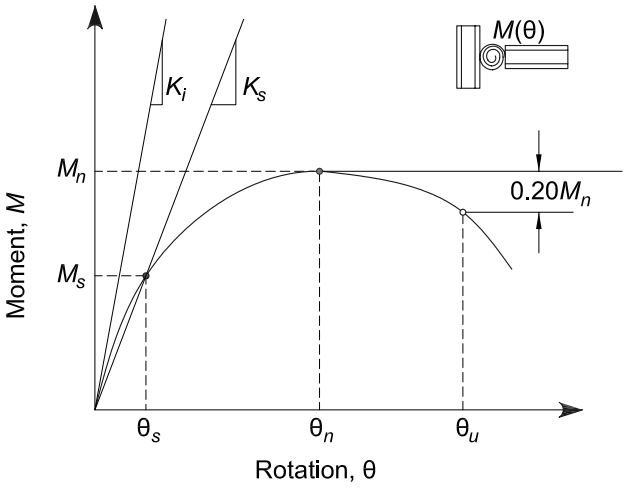

Fig. C-B3.2. Definition of stiffness, strength and ductility characteristics of the moment-rotation response of a partially restrained connection.

considered in the design (Leon, 1994). Examples of FR, PR and simple connection response curves are shown in Figure C-B3.3. The points marked θ_S indicate the service load states for the example connections and thereby define the secant stiffnesses for those connections.

Connection Strength. The strength of a connection is the maximum moment that it is capable of carrying, M_n, as shown in Figure C-B3.2. The strength of a connection can be determined on the basis of an ultimate limit-state model of the connection, or from a physical test. If the moment-rotation response does not exhibit a peak load then the strength can be taken as the moment at a rotation of 0.02 rad (Hsieh and Deierlein, 1991; Leon et al., 1996).

It is also useful to define a lower limit on strength below which the connection may be treated as a simple connection. Connections that transmit less than 20% of the fully plastic moment of the beam at a rotation of 0.02 rad may be considered to have no flexural strength for design. However, it should be recognized that the aggregate strength of many weak connections can be important when compared to that of a few strong connections (FEMA, 1997).

In Figure C-B3.3, the points marked M_n indicate the maximum strength states of the example connections. The points marked θ_u indicate the maximum rotation states of the example connections. Note that it is possible for an FR connection to have a strength less than the strength of the beam. It is also possible for a PR connection to have a strength greater than the strength of the beam.

The strength of the connection must be adequate to resist the moment demands implied by the design loads.

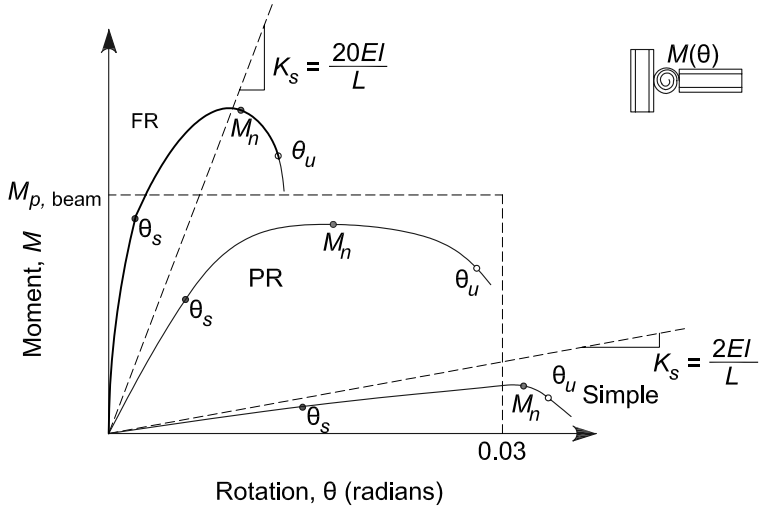

Fig. C-B3.3. Classification of moment-rotation response of fully restrained (FR), partially restrained (PR) and simple connections.

Connection Ductility. If the connection strength substantially exceeds the fully plastic moment of the beam, then the ductility of the structural system is controlled by the beam and the connection can be considered elastic. If the connection strength only marginally exceeds the fully plastic moment of the beam, then the connection may experience substantial inelastic deformation before the beam reaches its full strength. If the beam strength exceeds the connection strength, then deformations can concentrate in the connection. The ductility required of a connection will depend upon the particular application. For example, the ductility requirement for a braced frame in a nonseismic area will generally be less than the ductility required in a high seismic area. The rotation ductility requirements for seismic design depend upon the structural system (AISC, 2010b).

In Figure C-B3.2, the rotation capacity, θ_u, can be defined as the value of the connection rotation at the point where either (a) the resisting strength of the connection has dropped to $0.8M_n$ or (b) the connection has deformed beyond 0.03 rad. This second criterion is intended to apply to connections where there is no loss in strength until very large rotations occur. It is not prudent to rely on these large rotations in design.

The available rotation capacity, θ_u, should be compared with the rotation required at the strength limit state, as determined by an analysis that takes into account the nonlinear behavior of the connection. (Note that for design by ASD, the rotation required at the strength limit state should be assessed using analyses conducted at 1.6 times the ASD load combinations.) In the absence of an accurate analysis, a rotation capacity of 0.03 rad is considered adequate. This rotation is equal to the minimum beam-to-column connection capacity as specified in the seismic provisions for special moment frames (AISC, 2010b). Many types of PR connections, such as top and seat-angle connections, meet this criterion.

Structural Analysis and Design. When a connection is classified as PR, the relevant response characteristics of the connection must be included in the analysis of the structure to determine the member and connection forces, displacements and the frame stability. Therefore, PR construction requires, first, that the moment-rotation characteristics of the connection be known and, second, that these characteristics be incorporated in the analysis and member design.

Typical moment-rotation curves for many PR connections are available from one of several databases [for example, Goverdhan (1983); Ang and Morris (1984); Nethercot (1985); and Kishi and Chen (1986)]. Care should be exercised when utilizing tabulated moment-rotation curves not to extrapolate to sizes or conditions beyond those used to develop the database since other failure modes may control (ASCE Task Committee on Effective Length, 1997). When the connections to be modeled do not fall within the range of the databases, it may be possible to determine the response characteristics from tests, simple component modeling, or finite element studies (FEMA, 1995). Examples of procedures to model connection behavior are given in the literature (Bjorhovde et al., 1988; Chen and Lui, 1991; Bjorhovde et al., 1992; Lorenz et al., 1993; Chen and Toma, 1994; Chen et al., 1995; Bjorhovde et al., 1996; Leon et al., 1996; Leon and Easterling, 2002; Bijlaard et al., 2005; Bjorhovde et al., 2008).

The degree of sophistication of the analysis depends on the problem at hand. Design for PR construction usually requires separate analyses for the serviceability and strength limit states. For serviceability, an analysis using linear springs with a stiffness given by K_s (see Figure C-B3.2) is sufficient if the resistance demanded of the connection is well below the strength. When subjected to strength load combinations, a procedure is needed whereby the characteristics assumed in the analysis are consistent with those of the connection response. The response is especially nonlinear as the applied moment approaches the connection strength. In particular, the effect of the connection nonlinearity on second-order moments and other stability checks needs to be considered (ASCE Task Committee on Effective Length, 1997).

7. Moment Redistribution in Beams

A beam that is reliably restrained at one or both ends (either by connection to other members or by a support) will have reserve capacity past yielding at the point with the greatest moment predicted by an elastic analysis. The additional capacity is the result of inelastic redistribution of moments. This Specification bases the design of the member on providing a resisting moment greater than the demand represented by the greatest moment predicted by the elastic analysis. This approach ignores the reserve capacity associated with inelastic redistribution. The 10% reduction of the greatest moment predicted by elastic analysis (with the accompanying 10% increase in the moment on the reverse side of the moment diagram) is an attempt to account approximately for the reserve capacity.

This adjustment is appropriate only for cases where the inelastic redistribution of moments is possible. For statically determinate spans (e.g., beams that are simply supported at both ends or for cantilevers), redistribution is not possible. Therefore the adjustment is not allowable in these cases. Members with fixed ends or beams continuous over a support can sustain redistribution. Member sections that are unable to accommodate the inelastic rotation associated with the redistribution (e.g., because of local buckling) are also not permitted the reduction. Thus, only compact sections qualify for redistribution in this Specification.

An inelastic analysis will automatically account for any redistribution. Therefore, the redistribution of moments only applies to moments computed from an elastic analysis.

The 10% reduction rule applies only to beams. Inelastic redistribution is possible in more complicated structures, but the 10% amount is only verified, at present, for beams. For other structures, the provisions of Appendix 1 should be used.

8. Diaphragms and Collectors

This section provides charging language for the design of structural steel components (members and their connections) of diaphragms and collector systems.

Diaphragms transfer in-plane lateral loads to the lateral force resisting system. Typical diaphragm elements in a building structure are the floor and roof systems which accumulate lateral forces due to gravity, wind and/or seismic loads and distribute these forces to individual elements (braced frames, moment frames, shear

walls, etc.) of the vertically oriented lateral force resisting system of the building structure. Collectors (also known as drag struts) are often used to collect and deliver diaphragm forces to the lateral force resisting system.

Diaphragms are classified into one of three categories: rigid, semi-rigid or flexible. Rigid diaphragms distribute the in-plane forces to the lateral load resisting system with negligible in-plane deformation of the diaphragm. A rigid diaphragm may be assumed to distribute the lateral loads in proportion to the relative stiffness of the individual elements of the lateral force resisting system. A semi-rigid diaphragm distributes the lateral loads in proportion to the in-plane stiffness of the diaphragm and the relative stiffness of the individual elements of the lateral force resisting system. The in-plane stiffness of a flexible diaphragm is negligible compared to the stiffness of the lateral load resisting system and, therefore, the distribution of lateral forces is independent of the relative stiffness of the individual elements of the lateral force resisting system. In this case, the distribution of lateral forces may be computed in a manner analogous to a series of simple beams spanning between the lateral force resisting system elements.

Diaphragms should be designed for the shear, moment and axial forces resulting from the design loads. The diaphragm response may be considered analogous to a deep beam where the flanges (often referred to as chords of the diaphragm) develop tension and compression forces, and the web resists the shear. The component elements of the diaphragm need to have strength and deformation capacity consistent with assumptions and intended behavior.

10. Design for Ponding

As used in this Specification, ponding refers to the retention of water due solely to the deflection of flat roof framing. The amount of this water is dependent on the flexibility of the framing. Lacking sufficient framing stiffness, the accumulated weight of the water can result in the collapse of the roof. The problem becomes catastrophic when more water causes more deflection, resulting in more room for more water until the roof collapses. Detailed provisions for determining ponding stability and strength are given in Appendix 2.

12. Design for Fire Conditions

Section B3.12 provides the charging language for Appendix 4 on structural design for fire resistance. Qualification testing is an acceptable alternative to design by analysis for providing fire resistance. Qualification testing is addressed in ASCE/SFPE Standard 29 (ASCE, 2008), ASTM E119, and similar documents.

13. Design for Corrosion Effects

Steel members may deteriorate in some service environments. This deterioration may appear either as external corrosion, which would be visible upon inspection, or in undetected changes that would reduce member strength. The designer should recognize these problems by either factoring a specific amount of tolerance for damage into the design or providing adequate protection (for example, coatings or

cathodic protection) and/or planned maintenance programs so that such problems do not occur.

Because the interior of an HSS is difficult to inspect, some concern has been expressed regarding internal corrosion. However, good design practice can eliminate the concern and the need for expensive protection. Corrosion occurs in the presence of oxygen and water. In an enclosed building, it is improbable that there would be sufficient reintroduction of moisture to cause severe corrosion. Therefore, internal corrosion protection is a consideration only in HSS exposed to weather.

In a sealed HSS, internal corrosion cannot progress beyond the point where the oxygen or moisture necessary for chemical oxidation is consumed (AISI, 1970). The oxidation depth is insignificant when the corrosion process must stop, even when a corrosive atmosphere exists at the time of sealing. If fine openings exist at connections, moisture and air can enter the HSS through capillary action or by aspiration due to the partial vacuum that is created if the HSS is cooled rapidly (Blodgett, 1967). This can be prevented by providing pressure-equalizing holes in locations that make it impossible for water to flow into the HSS by gravity.

Situations where conservative practice would recommend an internal protective coating include: (1) open HSS where changes in the air volume by ventilation or direct flow of water is possible; and (2) open HSS subject to a temperature gradient that would cause condensation.

HSS that are filled or partially filled with concrete should not be sealed. In the event of fire, water in the concrete will vaporize and may create pressure sufficient to burst a sealed HSS. Care should be taken to keep water from remaining in the HSS during or after construction, since the expansion caused by freezing can create pressure that is sufficient to burst an HSS.

Galvanized HSS assemblies should not be completely sealed because rapid pressure changes during the galvanizing process tend to burst sealed assemblies.

B4. MEMBER PROPERTIES

1. Classification of Sections for Local Buckling

Cross sections with a limiting width-to-thickness ratio, λ, greater than those provided in Table B4.1 are subject to local buckling limit states. For the 2010 *Specification for Structural Steel Buildings*, Table B4.1 was separated into two parts: B4.1a for compression members and B4.1b for flexural members. Separation of Table B4.1 into two parts reflects the fact that compression members are only categorized as either slender or nonslender, while flexural members may be slender, noncompact or compact. In addition, separation of Table B4.1 into two parts clarifies ambiguities in λ_r. The width-to-thickness ratio, λ_r, may be different for columns and beams, even for the same element in a cross section, reflecting both the underlying stress state of the connected elements, and the different design methodologies between columns (Chapter E and Appendix 1) and beams (Chapter F and Appendix 1).

Limiting Width-to-Thickness Ratios for Compression Elements in Members Subject to Axial Compression. Compression members containing any elements

with width-to-thickness ratios greater than λ_r provided in Table B4.1a are designated as slender and are subject to the local buckling reductions detailed in Section E7 of the Specification. Nonslender compression members (all elements having width-to-thickness ratio $\leq \lambda_r$) are not subject to local buckling reductions.

Flanges of Built-Up I-Shaped Sections. In the 1993 *LRFD Specification for Structural Steel Buildings* (AISC, 1993) , for built-up I-shaped sections under axial compression (Case 2 in Table B4.1a), modifications were made to the flange local buckling criterion to include web-flange interaction. The k_c in the λ_r limit is the same as that used for flexural members. Theory indicates that the web-flange interaction in axial compression is at least as severe as in flexure. Rolled shapes are excluded from this provision because there are no standard sections with proportions where the interaction would occur at commonly available yield stresses. In built-up sections where the interaction causes a reduction in the flange local buckling strength, it is likely that the web is also a thin stiffened element. The k_c factor accounts for the interaction of flange and web local buckling demonstrated in experiments reported in Johnson (1985). The maximum limit of 0.76 corresponds to $F_{cr} = 0.69E/\lambda^2$ which was used as the local buckling strength in earlier editions of both the ASD and LRFD Specifications. An $h/t_w = 27.5$ is required to reach $k_c = 0.76$. Fully fixed restraint for an unstiffened compression element corresponds to $k_c = 1.3$ while zero restraint gives $k_c = 0.42$. Because of web-flange interactions it is possible to get $k_c < 0.42$ from the k_c formula. If $h/t_w > 5.70\sqrt{E/F_y}$, use $h/t_w = 5.70\sqrt{E/F_y}$ in the k_c equation, which corresponds to the 0.35 limit.

Rectangular HSS in Compression. The limits for rectangular HSS walls in uniform compression (Case 6 in Table B4.1a) have been used in AISC Specifications since 1969. They are based on Winter (1968), where adjacent stiffened compression elements in box sections of uniform thickness were observed to provide negligible torsional restraint for one another along their corner edges.

Round HSS in Compression. The λ_r limit for round HSS in compression (Case 9 in Table B4.1a) was first used in the 1978 *Specification for the Design, Fabrication, and Erection of Structural Steel for Buildings* (AISC, 1978). It was recommended in Schilling (1965) based upon research reported in Winter (1968). The same limit was also used to define a compact shape in bending in the 1978 *Specification*. Excluding the use of round HSS with $D/t > 0.45E/F_y$ was also recommended in Schilling (1965). However, following the SSRC recommendations (Ziemian, 2010) and the approach used for other shapes with slender compression elements, a Q factor is used in Section E7 for round sections to account for interaction between local and column buckling. The Q factor is the ratio between the local buckling stress and the yield stress. The local buckling stress for the round section is taken from AISI provisions based on *inelastic action* (Winter, 1970) and is based on tests conducted on fabricated and manufactured cylinders. Subsequent tests on fabricated cylinders (Ziemian, 2010) confirm that this equation is conservative.

Limiting Width-to-Thickness Ratios for Compression Elements in Members Subject to Flexure. Flexural members containing compression elements, all with width-to-thickness ratios less than or equal to λ_p as provided in Table B4.1b, are designated as compact. Compact sections are capable of developing a fully plastic stress

distribution and they possess a rotation capacity of approximately 3 before the onset of local buckling (Yura et al., 1978). Flexural members containing any compression element with width-to-thickness ratios greater than λ_p, but still with all compression elements having width-to-thickness ratios less than or equal to λ_r, are designated as noncompact. Noncompact sections can develop partial yielding in compression elements before local buckling occurs, but will not resist inelastic local buckling at the strain levels required for a fully plastic stress distribution. Flexural members containing any compression elements with width-to-thickness ratios greater than λ_r are designated as slender. Slender-element sections have one or more compression elements that will buckle elastically before the yield stress is achieved. Noncompact and slender-element sections are subject to flange local buckling and/or web local buckling reductions as provided in Chapter F and summarized in Table User Note F1.1, or in Appendix 1.

The values of the limiting ratios, λ_p and λ_r, specified in Table B4.1b are similar to those in the 1989 *Specification for Structural Steel Buildings—Allowable Stress Design and Plastic Design* (AISC, 1989) and Table 2.3.3.3 of Galambos (1978), except that $\lambda_p = 0.38\sqrt{E/F_y}$, limited in Galambos (1978) to determinate beams and to indeterminate beams when moments are determined by elastic analysis, was adopted for all conditions on the basis of Yura et al. (1978). For greater inelastic rotation capacities than provided by the limiting value of λ_p given in Table B4.1b, and/or for structures in areas of high seismicity, see Chapter D and Table D1.1 of the AISC *Seismic Provisions for Structural Steel Buildings* (AISC, 2010b).

Webs in Flexure. In the 2010 *Specification for Structural Steel Buildings*, formulas for λ_p were added as Case 16 in Table B4.1b for I-shaped beams with unequal flanges based on White (2003).

Rectangular HSS in Flexure. The λ_p limit for compact sections is adopted from the *Limit States Design of Steel Structures* (CSA, 2009). Lower values of λ_p are specified for high-seismic design in the *Seismic Provisions for Structural Steel Buildings* based upon tests (Lui and Goel, 1987) that have shown that rectangular HSS braces subjected to reversed axial load fracture catastrophically under relatively few cycles if a local buckle forms. This was confirmed in tests (Sherman, 1995a) where rectangular HSS braces sustained over 500 cycles when a local buckle did not form, even though general column buckling had occurred, but failed in less than 40 cycles when a local buckle developed. Since 2005, the λ_p limit for webs in rectangular HSS flexural members (Case 19 in Table B4.1b) has been reduced from $\lambda_p = 3.76\sqrt{E/F_y}$ to $\lambda_p = 2.42\sqrt{E/F_y}$ based on the work of Wilkinson and Hancock (1998, 2002).

Round HSS in Flexure. The λ_p values for round HSS in flexure (Case 20, Table B4.1b) are based on Sherman (1976), Sherman and Tanavde (1984) and Ziemian (2010). Section F8 also limits the D/t ratio for any round section to $0.45E/F_y$. Beyond this, the local buckling strength decreases rapidly, making it impractical to use these sections in building construction.

2. Design Wall Thickness for HSS

ASTM A500/A500M (ASTM, 2007d) tolerances allow for a wall thickness that is not greater than ± 10% of the nominal value. Because the plate and strip from which electric-resistance-welded (ERW) HSS are made are produced to a much smaller thickness tolerance, manufacturers in the United States consistently produce ERW HSS with a wall thickness that is near the lower-bound wall thickness limit. Consequently, AISC and the Steel Tube Institute of North America (STI) recommend that 0.93 times the nominal wall thickness be used for calculations involving engineering design properties of ERW HSS. This results in a weight (mass) variation that is similar to that found in other structural shapes. Submerged-arc-welded (SAW) HSS are produced with a wall thickness that is near the nominal thickness and require no such reduction. The design wall thickness and section properties based upon this reduced thickness have been tabulated in AISC and STI publications since 1997.

3. Gross and Net Area Determination

3a. Gross Area

Gross area is the total area of the cross section without deductions for holes or ineffective portions of elements subject to local buckling.

3b. Net Area

The net area is based on net width and load transfer at a particular chain. Because of possible damage around a hole during drilling or punching operations, $^1/_{16}$ in. (1.5 mm) is added to the nominal hole diameter when computing the net area.

CHAPTER C
DESIGN FOR STABILITY

Design for stability is the combination of analysis to determine the required strengths of components and proportioning of components to have adequate available strengths. Various methods are available to provide for stability (Ziemian, 2010).

Chapter C addresses the stability design requirements for steel buildings and other structures. It is based upon the direct analysis method, which can be used in all cases. The effective length method and first-order analysis method are addressed in Appendix 7 as alternative methods of design for stability, and can be used when the limits in Appendix Sections 7.2.1 and 7.3.1, respectively, are satisfied. Other approaches, including design using second-order inelastic or plastic analysis are permitted provided the general requirements in Section C1 are met. Additional provisions for design by inelastic analysis are provided in Appendix 1. Elastic structural analysis by itself is not sufficient to assess stability because the analysis and the equations for component strengths are inextricably interdependent.

C1. GENERAL STABILITY REQUIREMENTS

There are many parameters and behavioral effects that influence the stability of steel-framed structures (Birnstiel and Iffland, 1980; McGuire, 1992; White and Chen, 1993; ASCE Task Committee on Effective Length, 1997; Ziemian, 2010). The stability of structures and individual elements must be considered from the standpoint of the structure as a whole, including not only the compression members, but also the beams, bracing systems and connections.

Stiffness requirements for control of seismic drift are included in many building codes that prohibit *sidesway* amplification ($\Delta_{2nd\text{-}order}/\Delta_{1st\text{-}order}$ or B_2), calculated with nominal stiffness, from exceeding approximately 1.5 to 1.6 (ICC, 2009). This limit usually is well within the more general recommendation that sidesway amplification, calculated with reduced stiffness, should be equal to or less than 2.5. The latter recommendation is made because at larger levels of amplification, small changes in gravity loads and/or structural stiffness can result in relatively larger changes in sidesway deflections and second-order effects, due to large geometric nonlinearities.

Table C-C1.1 shows how the five general requirements provided in Section C1 are addressed in the direct analysis method (Sections C2 and C3) and the effective length method (Appendix 7, Section 7.2). The first-order analysis method (Appendix 7, Section 7.3) is not included in Table C-C1.1 because it addresses these requirements in an indirect manner using a mathematical manipulation of the direct analysis method. The additional lateral load required in Appendix 7, Section 7.3.2(1) is calibrated to achieve roughly the same result as the collective effects of the notional load required in Section C2.2b, a B_2 multiplier for P-Δ effects required in Section C2.1(2), and the stiffness reduction required in Section C2.3. Additionally, a B_1 multiplier addresses P-δ effects as required in Appendix 7, Section 7.3.2(2).

TABLE C-C1.1
Comparison of Basic Stability Requirements with Specific Provisions

Basic Requirement in Section C1		Provision in Direct Analysis Method (DM)	Provision in Effective Length Method (ELM)
(1) Consider all deformations		C2.1(1). Consider all deformations	Same as DM (by reference to C2.1)
(2) Consider second-order effects (both P-Δ and P-δ)		C2.1(2). Consider second-order effects (P-Δ and P-δ)**	Same as DM (by reference to C2.1)
(3) Consider geometric imperfections *This includes joint-position imperfections* (which affect structure response) and member imperfections (which affect structure response and member strength)*	Effect of joint-position imperfections* on structure response	C2.2a. Direct modeling or C2.2b. Notional loads	Same as DM, second option only (by reference to C2.2b)
	Effect of member imperfections on structure response	Included in the stiffness reduction specified in C2.3	All these effects are considered by using KL from a sidesway buckling analysis in the member strength check. Note that the only difference between DM and ELM is that: • DM uses reduced stiffness in the analysis; $KL = L$ in the member strength check • ELM uses full stiffness in the analysis; KL from sidesway buckling analysis in the member strength check for frame members
	Effect of member imperfections on member strength	Included in member strength formulas, with $KL = L$	
(4) Consider stiffness reduction due to inelasticity *This affects structure response and member strength*	Effect of stiffness reduction on structure response	Included in the stiffness reduction specified in C2.3	
	Effect of stiffness reduction on member strength	Included in member strength formulas, with $KL = L$	
(5) Consider uncertainty in strength and stiffness *This affects structure response and member strength*	Effect of stiffness/ strength uncertainty on structure response	Included in the stiffness reduction specified in C2.3	
	Effect of stiffness/ strength uncertainty on member strength	Included in member strength formulas, with $KL = L$	

* In typical building structures, the "joint-position imperfections" refers to column out-of-plumbness.
** Second-order effects may be considered either by rigorous second-order analysis or by the approximate technique (using B_1 and B_2) specified in Appendix 8.

C2. CALCULATION OF REQUIRED STRENGTHS

Analysis to determine required strengths in accordance with this Section and the assessment of member and connection available strengths in accordance with Section C3 form the basis of the direct analysis method of design for stability. This method is useful for the stability design of all structural steel systems, including moment frames, braced frames, shear walls, and combinations of these and similar systems (AISC-SSRC, 2003b). While the precise formulation of this method is

unique to the AISC Specification, some of its features have similarities to other major design specifications around the world, including the Eurocodes, the Australian standard, the Canadian standard, and ACI 318 (ACI, 2008).

The direct analysis method allows a more accurate determination of the load effects in the structure through the inclusion of the effects of geometric imperfections and stiffness reductions directly within the structural analysis. This also allows the use of $K = 1.0$ in calculating the in-plane column strength, P_c, within the beam-column interaction equations of Chapter H. This is a significant simplification in the design of steel moment frames and combined systems.

1. General Analysis Requirements

Deformations to be Considered in the Analysis. It is required that the analysis consider flexural, shear and axial deformations, and all other component and connection deformations that contribute to the displacement of the structure. However, it is important to note that "consider" is not synonymous with "include," and some deformations can be neglected after rational consideration of their likely effect. For example, the in-plane deformation of a concrete-on-steel deck floor diaphragm in an office building usually can be neglected, but that of a cold-formed steel roof deck in a large warehouse with widely spaced lateral-load-resisting elements usually cannot. As another example, shear deformations in beams and columns in a low-rise moment frame usually can be neglected, but this may not be true in a high-rise framed-tube system.

Second-Order Effects. The direct analysis method includes the basic requirement to calculate the internal load effects using a second-order analysis that accounts for both P-Δ and P-δ effects (see Figure C-C2.1). P-Δ effects are the effects of loads acting on the displaced location of joints or nodes in a structure. P-δ effects are the effect of loads acting on the deflected shape of a member between joints or nodes.

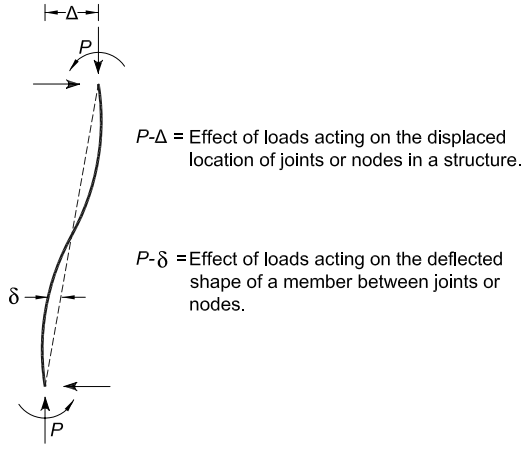

Fig. C-C2.1. P-Δ *and* P-δ *effects in beam-columns.*

Rigorous second-order analyses are those that accurately model all significant second-order effects. One such approach is the solution of the governing differential equation, either through stability functions or computer frame analysis programs that model these effects (McGuire et al., 2000; Ziemian, 2010). Some—but not all, and possibly not even most—modern commercial computer programs are capable of performing a rigorous second-order analysis, although this should be verified by the user for each particular program. The effect of neglecting P-δ in the analysis of the structure, a common approximation that is permitted under certain conditions, is discussed at the end of this section.

Methods that modify first-order analysis results through second-order amplifiers are permitted as an alternative to a rigorous analysis. The use of the B_1 and B_2 amplifiers provided in Appendix 8 is one such method. The accuracy of other methods should be verified.

Analysis Benchmark Problems. The following benchmark problems are recommended as a first-level check to determine whether an analysis procedure meets the requirements of a rigorous second-order analysis adequate for use in the direct analysis method (and the effective length method in Appendix 7). Some second-order analysis procedures may not include the effects of P-δ on the overall response of the structure. These benchmark problems are intended to reveal whether or not these effects are included in the analysis. It should be noted that per the requirements of Section C2.1(2), it is not always necessary to include P-δ effects in the second-order analysis (additional discussion of the consequences of neglecting these effects appears below).

The benchmark problem descriptions and solutions are shown in Figures C-C2.2 and C-C2.3. Case 1 is a simply supported beam-column subjected to an axial load concurrent with a uniformly distributed transverse load between supports. This problem contains only P-δ effects because there is no translation of one end of the member relative to the other. Case 2 is a fixed-base cantilevered beam-column subjected to an axial load concurrent with a lateral load at its top. This problem contains both P-Δ and P-δ effects. In confirming the accuracy of the analysis method, both moments and deflections should be checked at the locations shown for the various levels of axial load on the member and in all cases should agree within 3% and 5%, respectively.

Given that there are many attributes that must be studied to confirm the accuracy of a given analysis method for routine use in the design of general framing systems, a wide range of benchmark problems should be employed. Several other targeted analysis benchmark problems can be found in Kaehler et al. (2010), Chen and Lui (1987), and McGuire et al. (2000). When using benchmark problems to assess the correctness of a second-order procedure, the details of the analysis used in the benchmark study, such as the number of elements used to represent the member and the numerical solution scheme employed, should be replicated in the analysis used to design the actual structure. Because the ratio of design load to elastic buckling load is a strong indicator of the influence of second-order effects, benchmark problems with such ratios on the order of 0.6 to 0.7 should be included.

Effect of Neglecting P-δ. A common type of approximate analysis is one that captures only *P*-Δ effects due to member end translations (for example, *interstory drift*) but fails to capture *P*-δ effects due to curvature of the member relative to its chord. This type of analysis is referred to as a *P*-Δ analysis. Where *P*-δ effects are significant, errors arise in approximate methods that do not accurately account for the effect of *P*-δ moments on amplification of both local (δ) and global (Δ) displacements and corresponding internal moments. These errors can occur both with second-order computer analysis programs and with the B_1 and B_2 amplifiers. For instance, the R_M modifier in Equation A-8-7 is an adjustment factor that approximates the effects of *P*-δ (due to column curvature) on the overall sidesway displacements, Δ, and the corresponding moments. For regular rectangular moment frames, a single-element-per-member *P*-Δ analysis is equivalent to using the B_2 amplifier of Equation A-8-6 with $R_M = 1$, and hence, such an analysis neglects the effect of *P*-δ on the response of the structure.

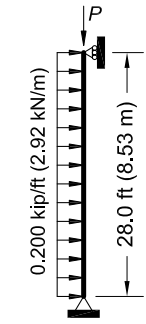

Major axis bending
W14x48 (W360x72)
E=29,000 ksi (200 GPa)

Axial Force, *P* (kips)	0	150	300	450
M_{mid} (kip-in.)	235 [235]	270 [269]	316 [313]	380 [375]
Δ_{mid} (in.)	0.202 [0.197]	0.230 [0.224]	0.269 [0.261]	0.322 [0.311]

Axial Force, *P* (kN)	0	667	1334	2001
M_{mid} (kN-m)	26.6 [26.6]	30.5 [30.4]	35.7 [35.4]	43.0 [42.4]
Δ_{mid} (mm)	5.13 [5.02]	5.86 [5.71]	6.84 [6.63]	8.21 [7.91]

Analyses include axial, flexural and shear deformations.
[Values in brackets] exclude shear deformations.

Fig. C-C2.2. Benchmark problem Case 1.

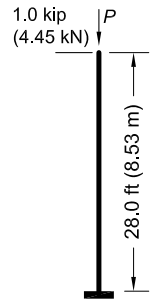

Major axis bending
W14x48 (W360x72)
E=29,000 ksi (200 GPa)

Axial Force, *P* (kips)	0	100	150	200
M_{base} (kip-in.)	336 [336]	470 [469]	601 [598]	856 [848]
Δ_{tip} (in.)	0.907 [0.901]	1.34 [1.33]	1.77 [1.75]	2.60 [2.56]

Axial Force, *P* (kN)	0	445	667	890
M_{base} (kN-m)	38.0 [38.0]	53.2 [53.1]	68.1 [67.7]	97.2 [96.2]
Δ_{tip} (mm)	23.1 [22.9]	34.2 [33.9]	45.1 [44.6]	66.6 [65.4]

Analyses include axial, flexural and shear deformations.
[Values in brackets] exclude shear deformations.

Fig. C-C2.3. Benchmark problem Case 2.

Section C2.1(2) indicates that a *P*-Δ-only analysis (one that neglects the effect of *P*-δ deformations on the response of the structure) is permissible for typical building structures when the ratio of second-order drift to first-order drift is less than 1.7 and no more than one-third of the total gravity load on the building is on columns that are part of moment-resisting frames. The latter condition is equivalent to an R_M value of 0.95 or greater. When these conditions are satisfied, the error in lateral displacement from a *P*-Δ-only analysis typically will be less than 3%. However, when the *P*-δ effect in one or more members is large (corresponding to a B_1 multiplier of more than about 1.2), use of a *P*-Δ-only analysis may lead to larger errors in the nonsway moments in components connected to the high-*P*-δ members.

The engineer should be aware of this possible error before using a *P*-Δ-only analysis in such cases. For example, consider the evaluation of the fixed-base cantilevered beam-column shown in Figure C-C2.4 using the direct analysis method. The sidesway displacement amplification factor is 3.83 and the base moment amplifier is 3.32, giving M_u = 1,394 kip-in.

For the loads shown, the beam-column strength interaction according to Equation H1-1a is equal to 1.0. The sidesway displacement and base moment amplification determined by a single-element *P*-Δ analysis, which ignores the effect of *P*-δ on the response of the structure, is 2.55, resulting in an estimated M_u = 1,070 kip-in.—an error of 23.2% relative to the more accurate value of M_u—and a beam-column interaction value of 0.91.

P-δ effects can be captured in some (but not all) *P*-Δ-only analysis methods by subdividing the members into multiple elements. For this example, three equal-length *P*-Δ analysis elements are required to reduce the errors in the second-order base moment and sidesway displacement to less than 3% and 5%, respectively.

It should be noted that in this case the unconservative error that results from ignoring the effect of *P*-δ on the response of the structure is removed through the use of Equation A-8-8. For the loads shown in Figure C-C2.4, Equations A-8-6 and A-8-7

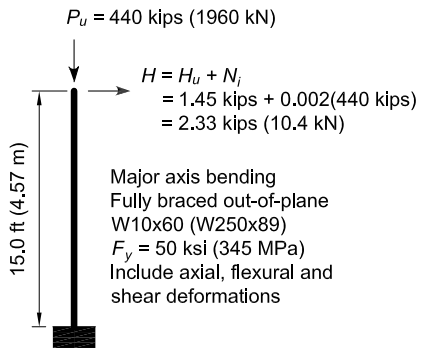

P_u/P_y = 0.50, τ = 1.0
E = 0.8×τ×29,000 ksi = 23,200 ksi (160 GPa)
$G = E / 2(1 + \nu)$ = 8,920 ksi (61.5 GPa)

Rigorous *P*-Δ and *P*-δ analysis:
Δ_{2nd} = 2.22 in. (56.5 mm)
M_u = 1,394 kip-in. (158 kN-m)
$P_u / \phi_c P_n + \frac{8}{9}(M_u / \phi_b M_n) = 1.00$

Single-element *P*-Δ analysis:
Δ_{1st} = 0.580 in. (15 mm)
$M_{1st} = HL$ = 419 kip-in. (48 kN-m)
$1 / [1 - P_u / (HL / \Delta_{1st})] = 2.55$
$M_u^{P\text{-}\Delta} = 2.55 M_{1st}$ = 1,070 kip-in. (121 kN-m)
$P_u / \phi_c P_n + \frac{8}{9}(M_u^{P\text{-}\Delta} / \phi_b M_n) = 0.910$

Fig. C-C2.4. Illustration of potential errors associated with the use of a single-element-per-member P-Δ *analysis.*

with $R_M = 0.85$ gives a B_2 amplifier of 3.52. This corresponds to M_u = 1,476 kip-in. (166×10^6 N-mm) in the preceding example, approximately 6% over that determined from a rigorous second order analysis.

For sway columns with nominally simply supported base conditions, the errors in the second-order internal moment and in the second-order displacements from a *P*-Δ-only analysis are generally smaller than 3% and 5%, respectively, when $\alpha P_r/P_{eL} \leq 0.05$,

where

α = 1.00 (LRFD)
= 1.60 (ASD)
P_r = required axial force, ASD or LRFD, kips (N)
$P_{eL} = \pi^2 EI/L^2$ if the analysis uses nominal stiffness, kips (N)
$P_{eL} = 0.8\tau_b \pi^2 EI/L^2$, kips (N), if the analysis uses a flexural stiffness reduction of $0.8\tau_b$

For sway columns with rotational restraint at both ends of at least $1.5(EI/L)$ if the analysis uses nominal stiffness or $1.5(0.8\tau_b EI/L)$ if the analysis uses a flexural stiffness reduction of $0.8\tau_b$, the errors in the second-order internal moments and displacements from a *P*-Δ-only analysis are generally smaller than 3% and 5%, respectively, when $\alpha P_r/P_{eL} \leq 0.12$.

For members subjected predominantly to nonsway end conditions, the errors in the second-order internal moments and displacements from a *P*-Δ-only analysis are generally smaller than 3% and 5%, respectively, when $\alpha P_r/P_{eL} \leq 0.05$.

In meeting the above limitations for use of a *P*-Δ-only analysis, it is important to note that per Section C2.1(2) the moments along the length of member (i.e., the moments between the member-end nodal locations) should be amplified as necessary to include *P*-δ effects. One device for achieving this is the use of a B_1 factor.

Kaehler et al. (2010) provide further guidelines for the appropriate number of *P*-Δ analysis elements in cases where the above limits are exceeded, as well as guidelines for calculating internal element second-order moments. They also provide relaxed guidelines for the number of elements required per member when using typical second-order analysis capabilities that include both *P*-Δ and *P*-δ effects.

As previously indicated, the engineer should verify the accuracy of second-order analysis software by comparisons to known solutions for a range of representative loadings. In addition to the examples presented in Chen and Lui (1987) and McGuire et al. (2000), Kaehler et al. (2010) provides five useful benchmark problems for testing second-order analysis of frames composed of prismatic members. In addition, they provide benchmarks for evaluation of second-order analysis capabilities for web-tapered members.

Analysis at Strength Level. It is essential that the analysis of the frame be made at the strength level because of the nonlinearity associated with second-order effects. For design by ASD, this load level is estimated as 1.6 times the ASD load combinations, and the analysis must be conducted at this elevated load to capture second-order effects at the strength level.

2. Consideration of Initial Imperfections

Modern stability design provisions are based on the premise that the member forces are calculated by second-order elastic analysis, where equilibrium is satisfied on the deformed geometry of the structure. Initial imperfections in the structure, such as out-of-plumbness and material and fabrication tolerances, create destabilizing effects.

In the development and calibration of the direct analysis method, initial geometric imperfections are conservatively assumed equal to the maximum material, fabrication and erection tolerances permitted in the AISC *Code of Standard Practice for Steel Buildings and Bridges* (AISC, 2010a): a member out-of-straightness equal to $L/1000$, where L is the member length between brace or framing points, and a frame out-of-plumbness equal to $H/500$, where H is the story height. The permitted out-of-plumbness may be smaller in some cases, as specified in the AISC *Code of Standard Practice for Steel Buildings and Bridges*.

Initial imperfections can be accounted for in the direct analysis method through direct modeling (Section C2.2a) or the inclusion of notional loads (Section C2.2b). When second-order effects are such that the maximum sidesway amplification $\Delta_{2nd\ order}/\Delta_{1st\ order}$ or $B_2 \le 1.7$ using the reduced elastic stiffness (or 1.5 using the unreduced elastic stiffness) for all lateral load combinations, it is permitted to apply the notional loads only in the gravity load-only combinations and not in combination with other lateral loads. At this low range of sidesway amplification or B_2, the errors in internal forces caused by not applying the notional loads in combination with other lateral loads are relatively small. When B_2 is above the threshold, the notional loads must also be applied in combination with other lateral loads.

The Specification requirements for consideration of initial imperfections are intended to apply only to analyses for strength limit states. It is not necessary, in most cases, to consider initial imperfections in analyses for serviceability conditions such as drift, deflection and vibration.

3. Adjustments to Stiffness

Partial yielding accentuated by *residual stresses* in members can produce a general softening of the structure at the strength limit state that further creates destabilizing effects. The direct analysis method is also calibrated against inelastic distributed-plasticity analyses that account for the spread of plasticity through the member cross section and along the member length. The residual stresses in W-shapes are assumed to have a maximum value of $0.3F_y$ in compression at the flange tips, and a distribution matching the so-called Lehigh pattern—a linear variation across the flanges and uniform tension in the web (Ziemian, 2010).

Reduced stiffness ($EI^* = 0.8\tau_b EI$ and $EA^* = 0.8EA$) is used in the direct analysis method for two reasons. First, for frames with slender members, where the limit state is governed by elastic stability, the 0.8 factor on stiffness results in a system available strength equal to 0.8 times the elastic stability limit. This is roughly equivalent to the margin of safety implied in the design provisions for slender columns by the effective length procedure where from Equation E3-3, $\phi P_n = 0.9(0.877P_e) = 0.79P_e$. Second, for frames with intermediate or stocky columns, the $0.8\tau_b$ factor reduces the

stiffness to account for inelastic softening prior to the members reaching their design strength. The τ_b factor is similar to the inelastic stiffness reduction factor implied in the *column curve* to account for loss of stiffness under high compression loads ($\alpha P_r > 0.5P_y$), and the 0.8 factor accounts for additional softening under combined axial compression and bending. It is a fortuitous coincidence that the reduction coefficients for both slender and stocky columns are close enough, such that the single reduction factor of $0.8\tau_b$ works over the full range of slenderness.

The use of reduced stiffness only pertains to analyses for strength and stability limit states. It does not apply to analyses for other stiffness-based conditions and criteria, such as for drift, deflection, vibration and period determination.

For ease of application in design practice, where $\tau_b = 1$, the reduction on *EI* and *EA* can be applied by modifying *E* in the analysis. However, for computer programs that do semi-automated design, one should ensure that the reduced *E* is applied only for the second-order analysis. The elastic modulus should not be reduced in nominal strength equations that include *E* (for example, M_n for lateral-torsional buckling in an unbraced beam).

As shown in Figure C-C2.5, the net effect of modifying the analysis in the manner just described is to amplify the second-order forces such that they are closer to the

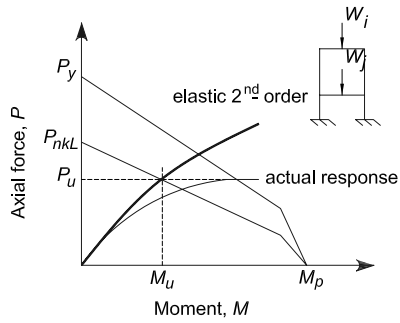

(a) Effective length method

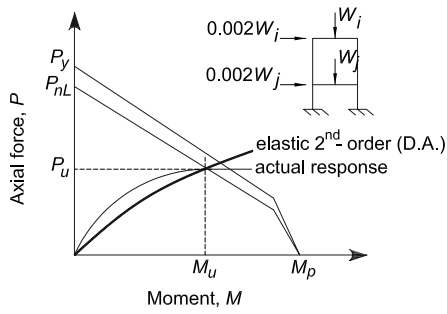

(b) Direct analysis method

Fig. C-C2.5. Comparison of in-plane beam-column interaction checks for (a) the effective length method and (b) the direct analysis method.

actual internal forces in the structure. It is for this reason that the beam-column interaction for in-plane flexural buckling is checked using an axial strength, P_{nL}, calculated from the *column curve* using the actual unbraced member length, L, in other words, with $K = 1.0$.

In cases where the flexibility of other structural components (connections, column base details, horizontal trusses acting as diaphragms) is modeled explicitly in the analysis, the stiffness of these components also should be reduced. The stiffness reduction may be taken conservatively as $EA^* = 0.8EA$ and/or $EI^* = 0.8EI$ for all cases. Surovek-Maleck et al. (2004) discusses the appropriate reduction of connection stiffness in the analysis of PR frames.

Where concrete shear walls or other nonsteel components contribute to the stability of the structure and the governing codes or standards for those elements specify a greater stiffness reduction, the greater reduction should be applied.

C3. CALCULATION OF AVAILABLE STRENGTHS

Section C3 provides that when the analysis meets the requirements in Section C2, the member provisions for available strength in Chapters E through I and connection provisions in Chapters J and K complete the process of design by the direct analysis method. The *effective length factor*, K, can be taken as unity for all members in the strength checks.

Where beams and columns rely upon braces that are not part of the lateral-load-resisting system to define their unbraced length, the braces themselves must have sufficient strength and stiffness to control member movement at the brace points (see Appendix 6). Design requirements for braces that are part of the lateral-load-resisting system (that is, braces that are included within the analysis of the structure) are addressed within Chapter C.

For beam-columns in single-axis flexure and compression, the analysis results from the direct analysis method may be used directly with the interaction equations in Section H1.3, which address in-plane flexural buckling and out-of-plane lateral-torsional instability separately. These separated interaction equations reduce the conservatism of the Section H1.1 provisions, which combine the two limit state checks into one equation that uses the most severe combination of in-plane and out-of-plane limits for P_r/P_c and M_r/M_c. A significant advantage of the direct analysis method is that the in-plane check with P_c in the interaction equation is determined using $K = 1.0$.

CHAPTER D
DESIGN OF MEMBERS FOR TENSION

The provisions of Chapter D do not account for eccentricities between the lines of action of connected assemblies.

D1. SLENDERNESS LIMITATIONS

The advisory upper limit on slenderness in the User Note is based on professional judgment and practical considerations of economics, ease of handling, and care required so as to minimize inadvertent damage during fabrication, transport and erection. This slenderness limit is not essential to the structural integrity of tension members; it merely assures a degree of stiffness such that undesirable lateral movement ("slapping" or vibration) will be unlikely. Out-of-straightness within reasonable tolerances does not affect the strength of tension members. Applied tension tends to reduce, whereas compression tends to amplify, out-of-straightness.

For single angles, the radius of gyration about the z-axis produces the maximum L/r and, except for very unusual support conditions, the maximum KL/r.

D2. TENSILE STRENGTH

Because of *strain hardening*, a ductile steel bar loaded in axial tension can resist without rupture a force greater than the product of its gross area and its specified minimum yield stress. However, excessive elongation of a tension member due to uncontrolled yielding of its gross area not only marks the limit of its usefulness but can precipitate failure of the structural system of which it is a part. On the other hand, depending upon the reduction of area and other mechanical properties of the steel, the member can fail by rupture of the net area at a load smaller than required to yield the gross area. Hence, general yielding of the gross area and rupture of the net area both constitute limit states.

The length of the member in the net area is generally negligible relative to the total length of the member. Strain hardening is easily reached in the vicinity of holes and yielding of the net area at fastener holes does not constitute a limit state of practical significance.

Except for HSS that are subjected to *cyclic load* reversals, there is no information that the factors governing the strength of HSS in tension differ from those for other structural shapes, and the provisions in Section D2 apply. Because the number of different end connection types that are practical for HSS is limited, the determination of the effective net area, A_e, can be simplified using the provisions in Chapter K.

D3. EFFECTIVE NET AREA

Section D3 deals with the effect of shear lag, applicable to both welded and bolted tension members. Shear lag is a concept used to account for uneven stress distribu-

tion in connected members where some but not all of their elements (flange, web, leg, etc.) are connected. The reduction coefficient, U, is applied to the net area, A_n, of bolted members and to the gross area, A_g, of welded members. As the length of the connection, l, is increased, the shear lag effect diminishes. This concept is expressed empirically by the equation for U. Using this expression to compute the effective area, the estimated strength of some 1,000 bolted and riveted connection test specimens, with few exceptions, correlated with observed test results within a scatterband of ±10% (Munse and Chesson, 1963). Newer research provides further justification for the current provisions (Easterling and Gonzales, 1993).

For any given profile and configuration of connected elements, $\bar{x}$ is the perpendicular distance from the connection plane, or face of the member, to the centroid of the member section resisting the connection force, as shown in Figure C-D3.1. The length, l, is a function of the number of rows of fasteners or the length of weld. The length, l, is illustrated as the distance, parallel to the line of force, between the first and last row of fasteners in a line for bolted connections. The number of bolts in a line, for the purpose of the determination of l, is determined by the line with the maximum number of bolts in the connection. For staggered bolts, the out-to-out dimension is used for l, as shown in Figure C-D3.2.

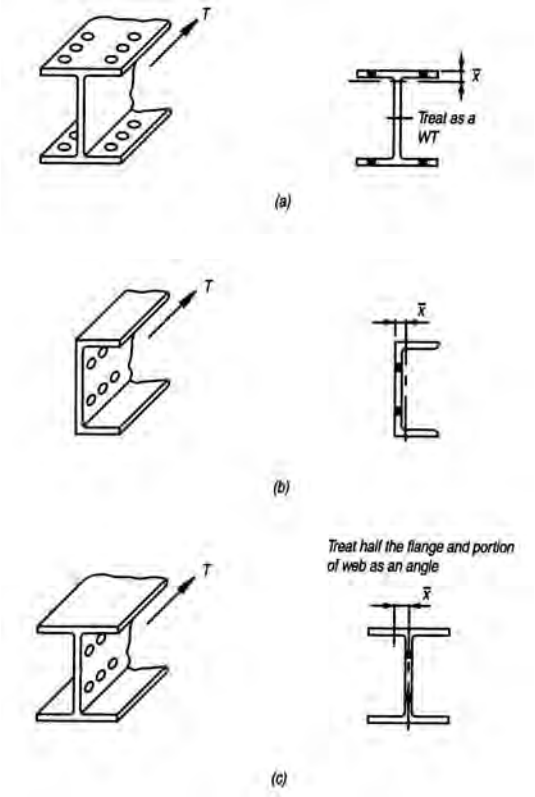

Fig. C-D3.1. Determination of $\bar{x}$ *for* U.

From the definition of the plastic section modulus, $Z = \sum|A_i\ d_i|$, where A_i is the area of a cross-sectional element and d_i is the perpendicular distance from the plastic neutral axis to the center of gravity of the element; $\bar{x}$ for cases like that shown on the right hand side of Figure C-D3.1(c) is Z_y/A. Because the section shown is symmetric about the vertical axis and that axis is also the plastic neutral axis, the first moment of the area to the left is $Z_y/2$, where Z_y is the plastic section modulus of the entire section. The area of the left side is $A/2$; therefore, by definition $\bar{x} = Z_y/A$. For the case shown on the right hand side of Figure C-D3.1(b), $\bar{x} = d/2 - Z_x/A$. Note that the plastic neutral axis must be an axis of symmetry for this relationship to apply.

There is insufficient data for establishing a value of U if all lines have only one bolt, but it is probably conservative to use A_e equal to the net area of the connected element. The limit states of block shear (Section J4.3) and bearing (Section J3.10), which must be checked, will probably control the design.

The ratio of the area of the connected element to the gross area is a reasonable lower bound for U and allows for cases where the calculated U based on $(1–\bar{x}/l)$ is very small, or nonexistent, such as when a single bolt per gage line is used and $l = 0$. This lower bound is similar to other design specifications, for example the AASHTO *Standard Specifications for Highway Bridges* (AASHTO, 2002), which allow a U based on the area of the connected portion plus half the gross area of the unconnected portion.

The effect of connection eccentricity is a function of connection and member stiffness and may sometimes need to be considered in the design of the tension connection or member. Historically, engineers have neglected the effect of eccentricity in both the member and the connection when designing tension-only bracing. In Cases 1a and 1b shown in Figure C-D3.3, the length of the connection required to resist the axial loads will usually reduce the applied axial load on the bolts to a negligible value. For Case 2, the flexibility of the member and the connections will allow the member to deform such that the resulting eccentricity is relieved to a considerable extent.

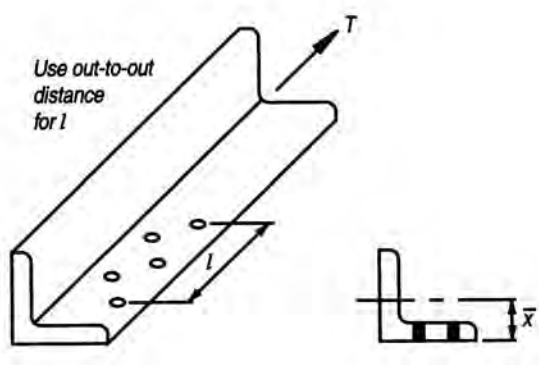

Fig. C-D3.2. Determination of l *for* U *of bolted connections with staggered holes.*

For welded connections, l is the length of the weld parallel to the line of force as shown in Figure C-D3.4 for longitudinal and longitudinal plus transverse welds. For welds with unequal lengths, use the average length.

End connections for HSS in tension are commonly made by welding around the perimeter of the HSS; in this case, there is no shear lag or reduction in the gross area.

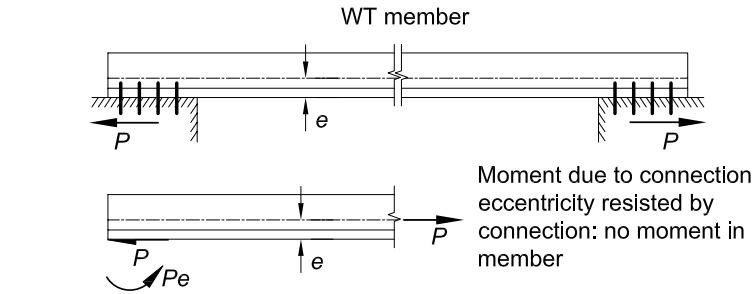

Case 1a. End Rotation Restrained by Connection to Rigid Abutments

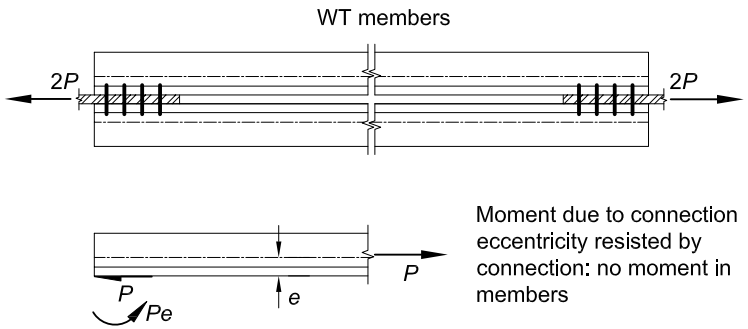

Case 1b. End Rotation Restrained by Symmetry

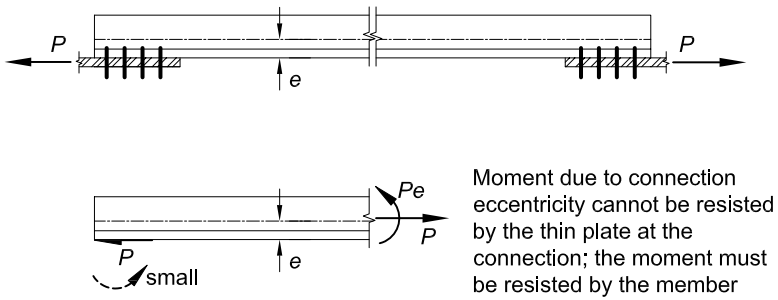

Case 2. End Rotation Not Restrained—Connection to Thin Plate

Fig. C-D3.3. The effect of connection restraint on eccentricity.

Alternatively, an end connection with gusset plates can be used. Single gusset plates may be welded in longitudinal slots that are located at the centerline of the cross section. Welding around the end of the gusset plate may be omitted for statically loaded connections to prevent possible *undercutting* of the gusset and having to bridge the gap at the end of the slot. In such cases, the net area at the end of the slot is the critical area as illustrated in Figure C-D3.5. Alternatively, a pair of gusset plates can be welded to opposite sides of a rectangular HSS with flare bevel groove welds with no reduction in the gross area.

For end connections with gusset plates, the general provisions for shear lag in Case 2 of Table D3.1 can be simplified and the connection eccentricity can be explicitly defined as in Cases 5 and 6. In Cases 5 and 6 it is implied that the weld length, l, should not be less than the depth of the HSS. This is consistent with the weld length requirements in Case 4. In Case 5, the use of $U = 1$ when $l \geq 1.3D$ is based on research (Cheng and Kulak, 2000) that shows rupture occurs only in short connections and in long connections the round HSS tension member necks within its length and failure is by member yielding and eventual rupture.

The shear lag factors given in Cases 7 and 8 of Table D3.1 are given as alternate U values to the value determined from $1 - \overline{x}/l$ given for Case 2 in Table D3.1. It is permissible to use the larger of the two values.

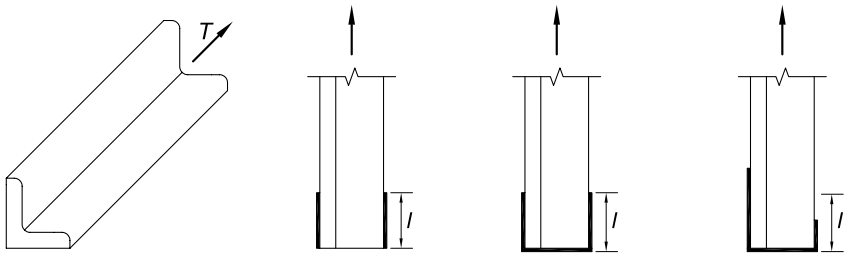

Fig. C-D3.4. Determination of l *for calculation of* U *for connections with longitudinal and transverse welds.*

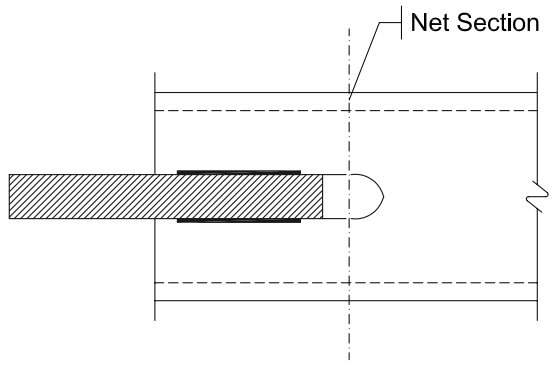

Fig. C-D3.5. Net area through slot for a single gusset plate.

D4. BUILT-UP MEMBERS

Although not commonly used, built-up member configurations using lacing, tie plates and perforated cover plates are permitted by this Specification. The length and thickness of tie plates are limited by the distance between the lines of fasteners, h, which may be either bolts or welds.

D5. PIN-CONNECTED MEMBERS

Pin-connected members are occasionally used as tension members with very large dead loads. Pin-connected members are not recommended when there is sufficient variation in live loading to cause wearing of the pins in the holes. The dimensional requirements presented in Specification Section D5.2 must be met to provide for the proper functioning of the pin.

1. Tensile Strength

The tensile strength requirements for pin-connected members use the same ϕ and Ω values as elsewhere in this Specification for similar limit states. However, the definitions of effective net area for tension and shear are different.

2. Dimensional Requirements

Dimensional requirements for pin-connected members are illustrated in Figure C-D5.1.

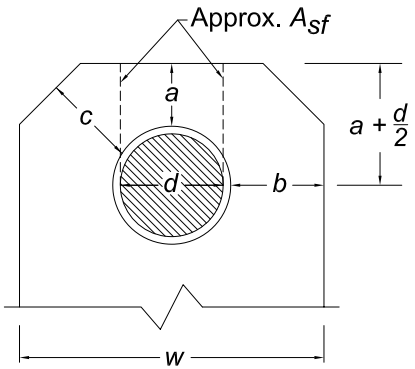

Dimensional Requirements

1. $a \geq 1.33\ b_e$
2. $w \geq 2b_e + d$
3. $c \geq a$

where

$b_e = 2t + 0.63$ in. (16 mm) $\leq b$

Fig. C-D5.1. Dimensional requirements for pin-connected members.

D6. EYEBARS

Forged eyebars have generally been replaced by pin-connected plates or eyebars thermally cut from plates. Provisions for the proportioning of eyebars contained in this Specification are based upon standards evolved from long experience with forged eyebars. Through extensive destructive testing, eyebars have been found to provide balanced designs when they are thermally cut instead of forged. The more conservative rules for pin-connected members of nonuniform cross section and for members not having enlarged "circular" heads are likewise based on the results of experimental research (Johnston, 1939).

Stockier proportions are required for eyebars fabricated from steel having a yield stress greater than 70 ksi (485 MPa) to eliminate any possibility of their "dishing" under the higher design stress.

1. Tensile Strength

The tensile strength of eyebars is determined as for general tension members, except that, for calculation purposes, the width of the body of the eyebar is limited to eight times its thickness.

2. Dimensional Requirements

Dimensional limitations for eyebars are illustrated in Figure C-D6.1. Adherence to these limits assures that the controlling limit state will be tensile yielding of the body; thus, additional limit state checks are unnecessary.

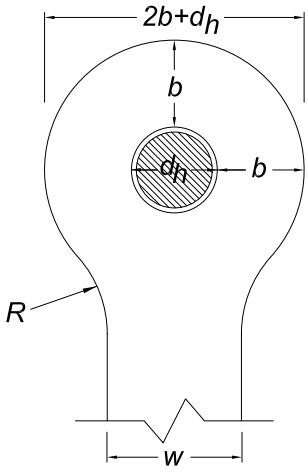

Dimensional Requirements

$t \geq {}^{1}/_{2}$ in. (13 mm) (Exception is provided in Section D6.2)

$w \leq 8t$

$d \geq {}^{7}/_{8}w$

$d_h \leq d + {}^{1}/_{32}$ in. (1 mm)

$R \geq d_h + 2b$

${}^{2}/_{3}w \leq b \leq {}^{3}/_{4}w$ (Upper limit is for calculation purposes only)

Fig. C-D6.1. Dimensional limitations for eyebars.

CHAPTER E
DESIGN OF MEMBERS FOR COMPRESSION

E1. GENERAL PROVISIONS

The column equations in Section E3 are based on a conversion of the research data into strength equations (Ziemian, 2010; Tide, 1985, 2001). These equations are the same as those in the 2005 AISC *Specification for Structural Steel Buildings* (AISC, 2005a) and are essentially the same as those in the previous editions of the LRFD Specification (AISC, 1986, 1993, 2000b). The resistance factor, ϕ, was increased from 0.85 to 0.90 in the 2005 Specification, recognizing substantial numbers of additional column strength analyses and test results, combined with the changes in industry practice that had taken place since the original calibrations were performed in the 1970s and 1980s.

In the original research on the probability-based strength of steel columns (Bjorhovde, 1972, 1978, 1988), three *column curves* were recommended. The three column curves were the approximate means of bands of strength curves for columns of similar manufacture, based on extensive analyses and confirmed by full-scale tests (Bjorhovde, 1972). For example, hot-formed and cold-formed heat treated HSS columns fell into the data band of highest strength [SSRC Column Category 1P (Bjorhovde, 1972, 1988; Bjorhovde and Birkemoe, 1979; Ziemian, 2010)], while welded built-up wide-flange columns made from universal mill plates were included in the data band of lowest strength (SSRC Column Category 3P). The largest group of data clustered around SSRC Column Category 2P. Had the original LRFD Specification opted for using all three column curves for the respective column categories, probabilistic analysis would have resulted in a resistance factor $\phi = 0.90$ or even slightly higher (Galambos, 1983; Bjorhovde, 1988; Ziemian, 2010). However, it was decided to use only one column curve, SSRC Column Category 2P, for all column types. This resulted in a larger data spread and thus a larger coefficient of variation, and so a resistance factor $\phi = 0.85$ was adopted for the column equations to achieve a level of reliability comparable to that of beams. Since that time, significant additional analyses and tests, as well as changes in practice, have demonstrated that the increase to 0.90 was warranted, indeed even somewhat conservative (Bjorhovde, 1988).

The single column curve and the resistance factor of 0.85 were selected by the AISC Committee on Specifications in 1981 when the first draft of the LRFD Specification was developed (AISC, 1986). Since then a number of changes in industry practice have taken place: (1) welded built-up shapes are no longer manufactured from universal mill plates; (2) the most commonly used structural steel is now ASTM A992, with a specified minimum yield stress of 50 ksi (345 MPa); and (3) changes in steelmaking practice have resulted in materials of higher quality and much better defined properties. The level and variability of the yield stress thus have led to a reduced coefficient of variation for the relevant material properties (Bartlett et al., 2003).

An examination of the SSRC Column Curve Selection Table (Bjorhovde, 1988; Ziemian, 2010) shows that the SSRC 3P Column Curve Category is no longer needed. It is now possible to use only the statistical data for SSRC Column Category 2P for the probabilistic determination of the reliability of columns. The curves in Figures C-E1.1 and C-E1.2 show the variation of the reliability index β with the live-to-dead load ratio, *L*/*D*, in the range of 1 to 5 for LRFD with $\phi = 0.90$ and ASD with

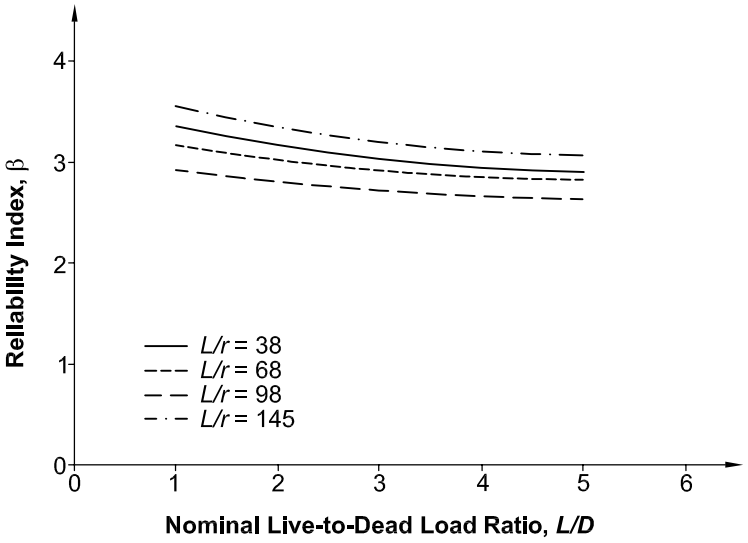

Fig. C-E1.1. Reliability of columns (LRFD).

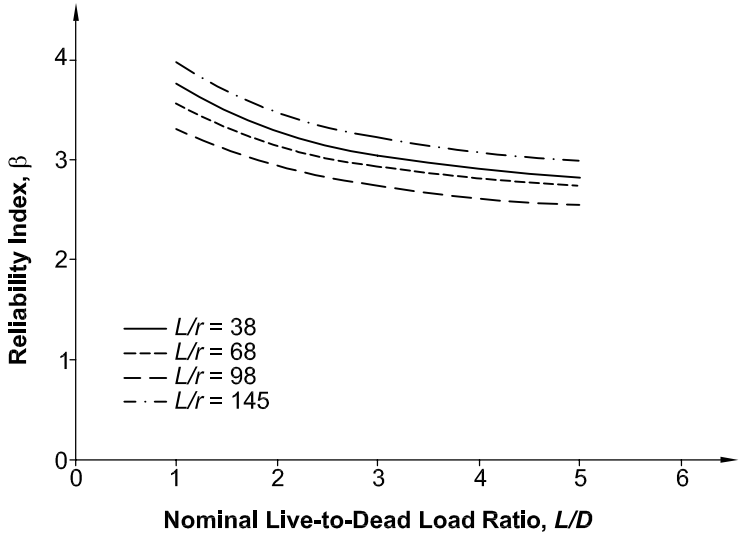

Fig. C-E1.2. Reliability of columns (ASD).

$\Omega = 1.67$, respectively, for $F_y = 50$ ksi (345 MPa). The reliability index does not fall below $\beta = 2.6$. This is comparable to the reliability of beams.

E2. EFFECTIVE LENGTH

The concept of a maximum limiting slenderness ratio has experienced an evolutionary change from a mandatory "…The slenderness ratio, *KL/r*, of compression members shall not exceed 200…" in the 1978 Specification to no restriction at all in the 2005 Specification (AISC, 2005a). The 1978 *ASD* and the 1999 LRFD Specifications (AISC, 1978; AISC, 2000b) provided a transition from the mandatory limit to a limit that was defined in the 2005 Specification by a User Note, with the observation that "…the slenderness ratio, *KL/r*, preferably should not exceed 200…." However, the designer should keep in mind that columns with a slenderness ratio of more than 200 will have an elastic buckling stress (Equation E3-4) less than 6.3 ksi (43.5 MPa). The traditional upper limit of 200 was based on professional judgment and practical construction economics, ease of handling, and care required to minimize inadvertent damage during fabrication, transport and erection. These criteria are still valid and it is not recommended to exceed this limit for compression members except for cases where special care is exercised by the fabricator and erector.

E3. FLEXURAL BUCKLING OF MEMBERS WITHOUT SLENDER ELEMENTS

Section E3 applies to compression members with all nonslender elements, as defined in Section B4.

The column strength equations in Section E3 are the same as those in the previous editions of the LRFD Specification, with the exception of the cosmetic replacement in

2005 of the slenderness term, $\lambda_c = \frac{KL}{\pi r}\sqrt{\frac{F_y}{E}}$, by the more familiar slenderness ratio, $\frac{KL}{r}$. For the convenience of those calculating the elastic buckling stress directly, without first calculating *K*, the limits on the use of Equations E3-2 and E3-3 are also provided in terms of the ratio F_y/F_e, as shown in the following discussion.

Comparisons between the previous column design curves and those introduced in the 2005 Specification and continued in this Specification are shown in Figures C-E3.1 and C-E3.2 for the case of $F_y = 50$ ksi (345 MPa). The curves show the variation of the available column strength with the slenderness ratio for LRFD and ASD, respectively. The LRFD curves reflect the change of the resistance factor, ϕ, from 0.85 to 0.90, as was explained in Commentary Section E1. These column equations provide improved economy in comparison with the previous editions of the Specification.

The limit between elastic and inelastic buckling is defined to be $\frac{KL}{r} = 4.71\sqrt{\frac{E}{F_y}}$ or $\frac{F_y}{F_e} = 2.25$. These are the same as $F_e = 0.44F_y$ that was used in the 2005 Specification.

For convenience, these limits are defined in Table C-E3.1 for the common values of F_y.

One of the key parameters in the column strength equations is the elastic critical stress, F_e. Equation E3-4 presents the familiar Euler form for F_e. However, F_e can also be determined by other means, including a direct frame buckling analysis or a torsional or flexural-torsional buckling analysis as addressed in Section E4.

The column strength equations of Section E3 can also be used for frame buckling and for torsional or flexural-torsional buckling (Section E4); they can also be entered

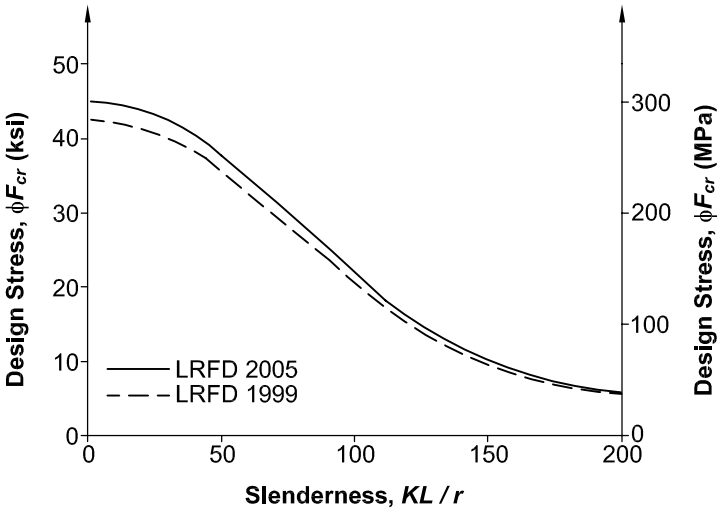

Fig. C-E3.1. LRFD column curves compared.

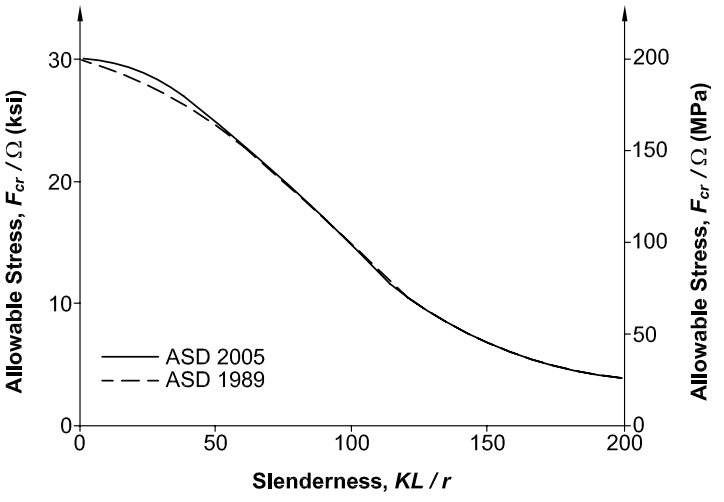

Fig. C-E3.2. ASD column curves compared.

TABLE C-E3.1
Limiting values of KL/r and F_e

F_y ksi (MPa)	Limiting $\frac{KL}{r}$	F_e ksi (MPa)
36 (250)	134	16.0 (111)
50 (345)	113	22.2 (153)
60 (415)	104	26.7 (184)
70 (485)	96	31.1 (215)

with a modified slenderness ratio for single-angle members (Section E5); and they can be modified by the Q-factor for columns with slender elements (Section E7).

E4. TORSIONAL AND FLEXURAL-TORSIONAL BUCKLING OF MEMBERS WITHOUT SLENDER ELEMENTS

Section E4 applies to singly symmetric and unsymmetric members, and certain doubly symmetric members, such as cruciform or built-up columns, with all nonslender elements, as defined in Section B4 for uniformly compressed elements. It also applies to doubly symmetric members when the torsional buckling length is greater than the flexural buckling length of the member.

The equations in Section E4 for determining the torsional and flexural-torsional elastic buckling loads of columns are derived in textbooks and monographs on structural stability [for example, Bleich (1952); Timoshenko and Gere (1961); Galambos (1968a); Chen and Atsuta (1977); Galambos and Surovek (2008), Ziemian (2010)]. Since these equations apply only to elastic buckling, they must be modified for inelastic buckling by using the torsional and flexural-torsional critical stress, F_{cr}, in the column equations of Section E3.

Torsional buckling of symmetric shapes and flexural-torsional buckling of unsymmetrical shapes are failure modes usually not considered in the design of hot-rolled columns. They generally do not govern, or the *critical load* differs very little from the weak-axis flexural buckling load. Torsional and flexural-torsional buckling modes may, however, control the strength of symmetric columns manufactured from relatively thin plate elements and unsymmetric columns and symmetric columns having torsional unbraced lengths significantly larger than the weak-axis flexural unbraced lengths. Equations for determining the elastic critical stress for such columns are given in Section E4. Table C-E4.1 serves as a guide for selecting the appropriate equations.

The simpler method of calculating the buckling strength of double-angle and tee-shaped members (Equation E4-2) uses directly the y-axis flexural strength from the column equations of Section E3 (Galambos, 1991).

TABLE C-E4.1
Selection of Equations for Torsional and Flexural-Torsional Buckling

Type of Cross Section	Applicable Equations in Section E4
Double angle and tee-shaped members Case (a) in Section E4 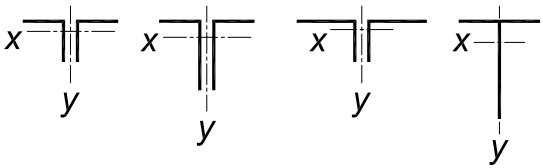	E4-2
All doubly symmetric shapes and Z-shapes Case (b) (i) in Section E4 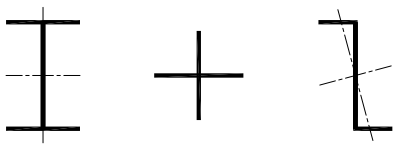	E4-4
Singly symmetric members except double angles and tee-shaped members Case (b)(ii) in Section E4 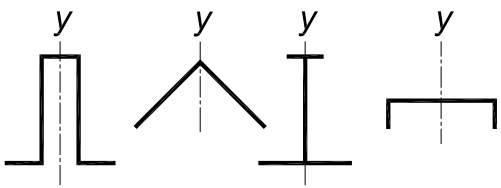	E4-5
Unsymmetric shapes Case (b)(iii) in Section E4 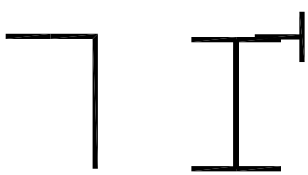	E4-6

Equations E4-4 and E4-9 contain a torsional buckling effective length factor, K_z. This factor may be conservatively taken as $K_z = 1.0$. For greater accuracy, $K_z = 0.5$ if both ends of the column have a connection that restrains warping, say by boxing the end over a length at least equal to the depth of the member. If one end of the member is restrained from warping and the other end is free to warp, then $K_z = 0.7$.

At points of bracing both lateral and/or torsional bracing shall be provided, as required in Appendix 6. AISC Design Guide 9 (Seaburg and Carter, 1997) provides an overview of the fundamentals of torsional loading for structural steel members. Design examples are also included.

E5. SINGLE ANGLE COMPRESSION MEMBERS

The axial load capacity of single angles is to be determined in accordance with Section E3 or E7. However, as noted in Section E4 and E7, single angles with $b/t \leq 20$ do not require the computation of F_e using Equations E4-5 or E4-6. This applies to all currently produced hot rolled angles; use Section E4 to compute F_e for fabricated angles with $b/t > 20$.

Section E5 also provides a simplified procedure for the design of single angles subjected to an axial compressive load introduced through one connected leg. The angle is treated as an axially loaded member by adjusting the member slenderness. The attached leg is to be fixed to a gusset plate or the projecting leg of another member by welding or by a bolted connection with at least two bolts. The equivalent slenderness expressions in this section presume significant restraint about the *y*-axis, which is perpendicular to the connected leg. This leads to the angle member tending to bend and buckle primarily about the *x*-axis. For this reason, L/r_x is the slenderness parameter used. The modified slenderness ratios indirectly account for bending in the angles due to the eccentricity of loading and for the effects of end restraint from the truss chords.

The equivalent slenderness expressions also presume a degree of rotational restraint. Equations E5-3 and E5-4 [Case (b)] assume a higher degree of *x*-axis rotational restraint than do Equations E5-1 and E5-2 [Case (a)]. Equations E5-3 and E5-4 are essentially equivalent to those employed for equal-leg angles as web members in latticed transmission towers in ASCE 10-97 (ASCE, 2000).

In space trusses, the web members framing in from one face typically restrain the twist of the chord at the panel points and thus provide significant *x*-axis restraint of the angles under consideration. It is possible that the chords of a planar truss well restrained against twist justify use of Case (b), in other words, Equations E5-3 and E5-4. Similarly, simple single-angle diagonal braces in braced frames could be considered to have enough end restraint such that Case (a), in other words, Equations E5-1 and E5-2, could be employed for their design. This procedure, however, is not intended for the evaluation of the compressive strength of x-braced single angles.

The procedure in Section E5 permits use of unequal-leg angles attached by the smaller leg provided that the equivalent slenderness is increased by an amount that

is a function of the ratio of the longer to the shorter leg lengths, and has an upper limit on L/r_z.

If the single-angle compression members cannot be evaluated using the procedures in this section, use the provisions of Section H2. In evaluating P_n, the effective length due to end restraint should be considered. With values of effective length factors about the geometric axes, one can use the procedure in Lutz (1992) to compute an effective radius of gyration for the column. To obtain results that are not too conservative, one must also consider that end restraint reduces the eccentricity of the axial load of single-angle struts and thus the value of f_{rbw} or f_{rbz} used in the flexural term(s) in Equation H2-1.

E6. BUILT-UP MEMBERS

Section E6 addresses the strength and dimensional requirements of built-up members composed of two or more shapes interconnected by stitch bolts or welds.

1. Compressive Strength

This section applies to built-up members such as double-angle or double-channel members with closely spaced individual components. The longitudinal spacing of connectors connecting components of built-up compression members must be such that the slenderness ratio, L/r, of individual shapes does not exceed three-fourths of the slenderness ratio of the entire member. However, this requirement does not necessarily ensure that the effective slenderness ratio of the built-up member is equal to that of a built-up member acting as a single unit.

For a built-up member to be effective as a structural member, the end connection must be welded or pretensioned bolted with Class A or B faying surfaces. Even so, the compressive strength will be affected by the shearing deformation of the intermediate connectors. The Specification uses the effective slenderness ratio to consider this effect. Based mainly on the test data of Zandonini (1985), Zahn and Haaijer (1987) developed an empirical formulation of the effective slenderness ratio for the 1986 AISC *Load and Resistance Factor Design Specification for Structural Steel Buildings* (AISC, 1986). When pretensioned bolted or welded intermediate connectors are used, Aslani and Goel (1991) developed a semi-analytical formula for use in the 1993, 1999 and 2005 AISC Specifications (AISC, 1993, 2000b, 2005a). As more test data became available, a statistical evaluation (Sato and Uang, 2007) showed that the simplified expressions used in this Specification achieve the same level of accuracy.

Fastener spacing less than the maximum required for strength may be needed to ensure a close fit over the entire faying surface of components in continuous contact. Special requirements for weathering steel members exposed to atmospheric corrosion are given in Brockenbrough (1983).

2. Dimensional Requirements

Section E6.2 provides additional requirements on connector spacing and end connection for built-up member design. Design requirements for laced built-up members

where the individual components are widely spaced are also provided. Some dimensioning requirements are based upon judgment and experience. The provisions governing the proportioning of perforated cover plates are based upon extensive experimental research (Stang and Jaffe, 1948).

E7. MEMBERS WITH SLENDER ELEMENTS

The structural engineer designing with hot-rolled shapes will seldom find an occasion to turn to Section E7 of the Specification. Among rolled shapes, the most frequently encountered cases requiring the application of this section are beam shapes used as columns, columns containing angles with thin legs, and tee-shaped columns having slender stems. Special attention to the determination of Q must be given when columns are made by welding or bolting thin plates together.

The provisions of Section E7 address the modifications to be made when one or more plate elements in the column cross section are slender. A plate element is considered to be slender if its width-to-thickness ratio exceeds the limiting value, λ_r, defined in Table B4.1a. As long as the plate element is not slender, it can support the full yield stress without local buckling. When the cross section contains slender elements, the slenderness reduction factor, Q, defines the ratio of the stress at local buckling to the yield stress, F_y. The yield stress, F_y, is replaced by the value QF_y in the column equations of Section E3. These modified equations are repeated as Equations E7-2 and E7-3. This approach to dealing with columns with slender elements has been used since the 1969 AISC *Specification for the Design, Fabrication, and Erection of Structural Steel for Buildings* (AISC, 1969), emulating the 1969 AISI *Specification for the Design of Cold-Formed Steel Structural Members* (AISI, 1969). Prior to 1969, the AISC practice was to remove the width of the plate that exceeded the λ_r limit and check the remaining cross section for conformance with the allowable stress, which proved inefficient and uneconomical. The equations in Section E7 are almost identical to the original 1969 equations.

This Specification makes a distinction between columns having unstiffened and stiffened elements. Two separate philosophies are used: Unstiffened elements are considered to have attained their limit state when they reach the theoretical local buckling stress. Stiffened elements, on the other hand, make use of the post-buckling strength inherent in a plate that is supported on both of its longitudinal edges, such as in HSS columns. The effective width concept is used to obtain the added post-buckling strength. This dual philosophy reflects the 1969 practice in the design of cold-formed columns. Subsequent editions of the AISI Specifications, in particular, the *North American Specification for the Design of Cold-Formed Steel Structural Members* (AISI, 2001, 2007), hereafter referred to as the AISI *North American Specification,* adopted the effective width concept for both stiffened and unstiffened elements. Subsequent editions of the AISC Specification (including this Specification) did not follow the example set by AISI for unstiffened plates because the advantages of the post-buckling strength do not become available unless the plate elements are very slender. Such dimensions are common for cold-formed columns, but are rarely encountered in structures made from hot-rolled plates.

1. Slender Unstiffened Elements, Q_s

Equations for the slender element reduction factor, Q_s, are given in Section E7.1 for outstanding elements in rolled shapes (Case a), built-up shapes (Case b), single angles (Case c), and stems of tees (Case d). The underlying scheme for these provisions is illustrated in Figure C-E7.1. The curves show the relationship between the Q-factor and a nondimensional slenderness ratio $\frac{b}{t}\sqrt{\frac{F_y}{E}\frac{12(1-\nu^2)}{\pi^2 k}}$. The width, b, and thickness, t, are defined for the applicable cross sections in Section B4; $\nu = 0.3$ (Poisson's ratio), and k is the plate buckling coefficient characteristic of the type of plate edge-restraint. For single angles, $k = 0.425$ (no restraint is assumed from the other leg), and for outstanding flange elements and stems of tees, k equals approximately 0.7, reflecting an estimated restraint from the part of the cross section to which the plate is attached on one of its edges, the other edge being free.

The curve relating Q to the plate slenderness ratio has three components: (i) a part where $Q = 1$ when the slenderness factor is less than or equal to 0.7 (the plate can be stressed up to its yield stress), (ii) the elastic plate buckling portion when buckling is governed by $F_{cr} = \frac{\pi^2 Ek}{12\left(1-\nu^2\right)\left(\frac{b}{t}\right)^2}$, and (iii) a transition range that empirically accountsfor the effect of early yielding due to *residual stresses* in the shape. Generally this transition range is taken as a straight line. The development of the provisions for unstiffened elements is due to the research of Winter and his co-work-

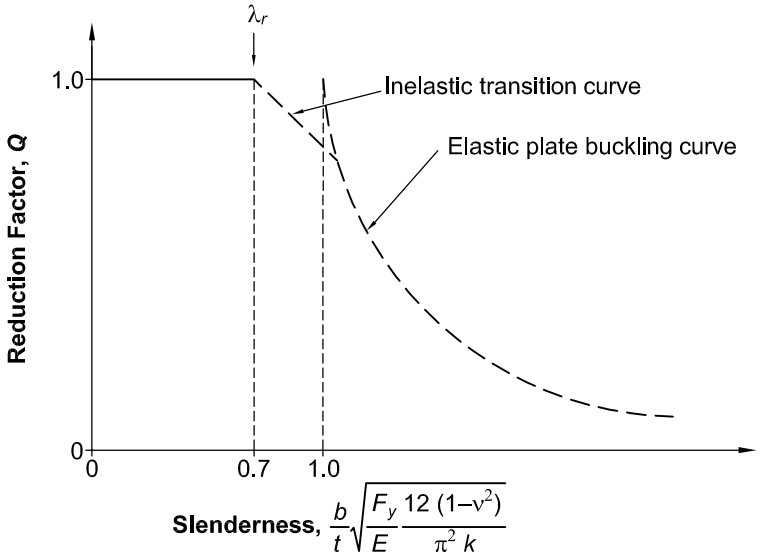

Fig. C-E7.1. Definition of Q_s *for unstiffened slender elements.*

ers, and a full listing of references is provided in the Commentary to the AISI *North American Specification* (AISI, 2001, 2007). The slenderness provisions are illustrated for the example of slender flanges of rolled shapes in Figure C-E7.2.

The equations for the unstiffened projecting flanges, angles and plates in built-up cross sections (Equations E7-7 through E7-9) have a history that starts with the research reported in Johnson (1985). It was noted in tests of beams with slender flanges and slender webs that there was an interaction between the buckling of the flanges and the distortions in the web causing an unconservative prediction of strength. A modification based on the equations recommended in Johnson (1985) appeared first in the 1989 *Specification for Structural Steel Buildings—Allowable Stress Design and Plastic Design* (AISC, 1989).

Modifications to simplify the original equations were introduced in the 1993 *Load and Resistance Factor Design Specification for Structural Steel Buildings* (AISC, 1993), and these equations have remained unchanged in the present Specification. The influence of web slenderness is accounted for by the introduction of the factor

$$k_c = \frac{4}{\sqrt{\frac{h}{t_w}}} \qquad \text{(C-E7-1)}$$

into the equations for λ_r and Q, where k_c is not taken as less than 0.35 nor greater than 0.76 for calculation purposes.

2. Slender Stiffened Elements, Q_a

While for slender unstiffened elements the Specification for local buckling is based on the limit state of the onset of plate buckling, an improved approach based on the

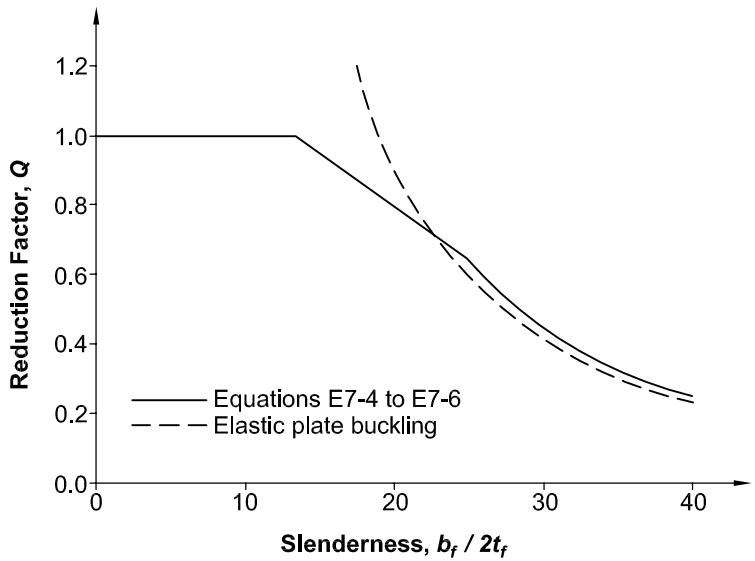

Fig. C-E7.2. Q *for rolled wide-flange columns with* F_y *= 50 ksi (345 MPa).*

effective width concept is used for the compressive strength of stiffened elements in columns. This method was first proposed in von Kármán et al. (1932). It was later modified by Winter (1947) to provide a transition between very slender elements and stockier elements shown by tests to be fully effective. As modified for the AISI *North American Specification* (AISI, 2001, 2007), the ratio of effective width to actual width increases as the level of compressive stress applied to a stiffened element in a member is decreased, and takes the form

$$\frac{b_e}{t} = 1.9\sqrt{\frac{E}{f}}\left[1 - \frac{C}{(b/t)\sqrt{\frac{E}{f}}}\right] \qquad \text{(C-E7-2)}$$

where f is taken as F_{cr} of the column based on $Q = 1.0$, and C is a constant based on test results (Winter, 1947).

The basis for cold-formed steel columns in the AISI *North American Specification* editions since the 1970s is $C = 0.415$. The original AISI coefficient 1.9 in Equation C-E7-2 is changed to 1.92 in the Specification to reflect the fact that the modulus of elasticity E is taken as 29,500 ksi (203 400 MPa) for cold-formed steel, and 29,000 ksi (200 000 MPa) for hot-rolled steel.

For the case of square and rectangular box-sections of uniform thickness, where the sides provide negligible rotational restraint to one another, the value of $C = 0.38$ in Equation E7-18 is higher than the value of $C = 0.34$ in Equation E7-17. Equation E7-17 applies to the general case of stiffened plates in uniform compression where there is substantial restraint from the adjacent flange or web elements. The coefficients $C = 0.38$ and $C = 0.34$ are smaller than the corresponding value of $C = 0.415$ in the AISI *North American Specification* (AISI, 2001, 2007), reflecting the fact that hot-rolled steel sections have stiffer connections between plates due to welding or fillets in rolled shapes than do cold-formed shapes.

The classical theory of longitudinally compressed cylinders overestimates the actual buckling strength, often by 200% or more. Inevitable imperfections of shape and the eccentricity of the load are responsible for the reduction in actual strength below the theoretical strength. The limits in Section E7.2(c) are based upon test evidence (Sherman, 1976), rather than theoretical calculations, that local buckling will not occur if $\frac{D}{t} \le \frac{0.11E}{F_y}$. When D/t exceeds this value but is less than $\frac{0.45E}{F_y}$, Equation E7-19 provides a reduction in the local buckling reduction factor Q. This Specification does not recommend the use of round HSS or pipe columns with $\frac{D}{t} > \frac{0.45E}{F_y}$.

CHAPTER F

DESIGN OF MEMBERS FOR FLEXURE

F1. GENERAL PROVISIONS

Chapter F applies to members subject to simple bending about one principal axis of the cross section. Section F2 gives the provisions for the flexural strength of doubly symmetric compact I-shaped and channel members subject to bending about their major axis. For most designers, the provisions in this section will be sufficient to perform their everyday designs. The remaining sections of Chapter F address less frequently occurring cases encountered by structural engineers. Since there are many such cases, many equations and many pages in the Specification, the table in User Note F1.1 is provided as a map for navigating through the cases considered in Chapter F. The coverage of the chapter is extensive and there are many equations that appear formidable; however, it is stressed again that for most designs, the engineer need seldom go beyond Section F2.

For all sections covered in Chapter F, the highest possible nominal flexural strength is the plastic moment, $M_n = M_p$. Being able to use this value in design represents the optimum use of the steel. In order to attain M_p the beam cross section must be compact and the member must be laterally braced. Compactness depends on the flange and web width-to-thickness ratios, as defined in Section B4. When these conditions are not met, the nominal flexural strength diminishes. All sections in Chapter F treat this reduction in the same way. For laterally braced beams, the plastic moment region extends over the range of width-to-thickness ratios, λ, terminating at λ_p. This is the compact condition. Beyond these limits the nominal flexural strength reduces linearly until λ reaches λ_r. This is the range where the section is noncompact. Beyond λ_r the section is a slender-element section.

These three ranges are illustrated in Figure C-F1.1 for the case of rolled wide-flange members for the limit state of flange local buckling. AISC Design Guide 25, *Frame Design Using Web-Tapered Members* (Kaehler et al., 2010), addresses flexural strength for web-tapered members. The curve in Figure C-F1.1 shows the relationship between the flange width-to-thickness ratio, $b_f/2t_f$, and the nominal flexural strength, M_n.

The basic relationship between the nominal flexural strength, M_n, and the unbraced length, L_b, for the limit state of lateral-torsional buckling is shown in Figure C-F1.2 for a compact section that is simply supported and subjected to uniform bending with $C_b = 1.0$.

There are four principal zones defined on the basic curve by the lengths L_{pd}, L_p and L_r. Equation F2-5 defines the maximum unbraced length, L_p, to reach M_p with uniform moment. Elastic lateral-torsional buckling will occur when the unbraced length is greater than L_r given by Equation F2-6. Equation F2-2 defines the range

of inelastic lateral-torsional buckling as a straight line between the defined limits M_p at L_p and $0.7F_yS_x$ at L_r. Buckling strength in the elastic region is given by Equation F2-3. The length L_{pd} is defined in Appendix 1 as the limiting unbraced length needed for plastic design. Although plastic design methods generally require more stringent limits on the unbraced length compared to elastic design, the magnitude of L_{pd} is often larger than L_p. The reason for this is because the L_{pd} expression

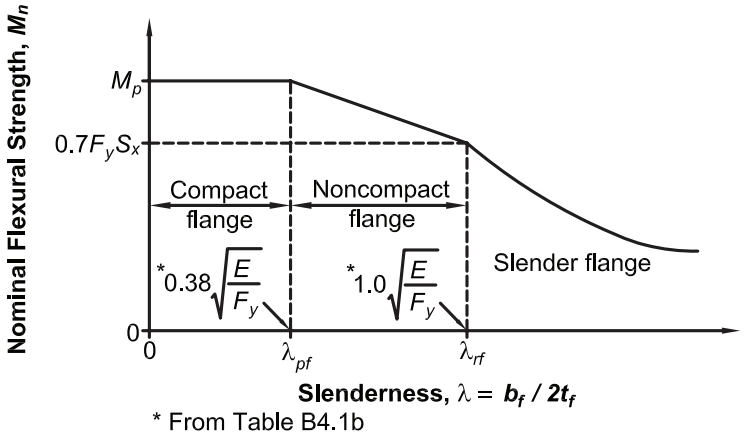

Fig. C-F1.1. Nominal flexural strength as a function of the flange width-to-thickness ratio of rolled I-shapes.

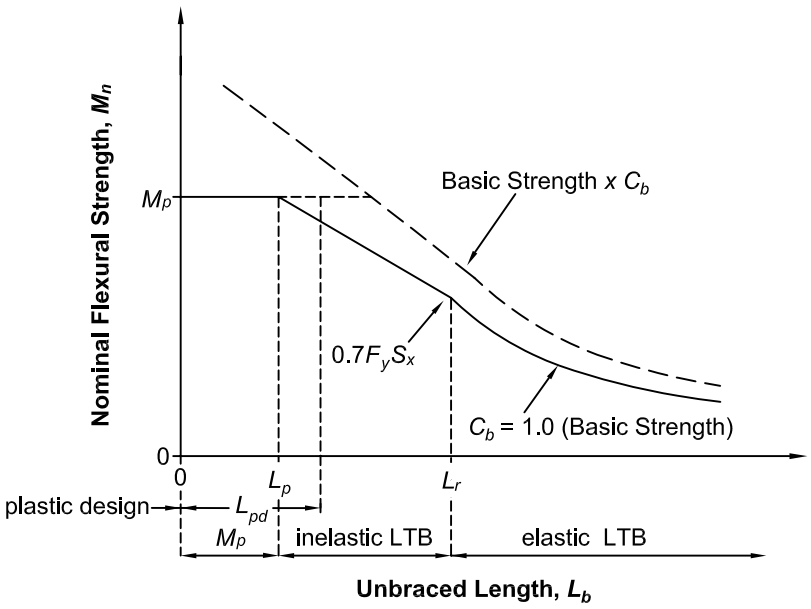

Fig. C-F1.2. Nominal flexural strength as a function of unbraced length and moment gradient.

accounts for moment gradient directly, while designs based upon an elastic analysis rely on C_b factors to account for the benefits of moment gradient as outlined in the following paragraphs.

For moment along the member other than uniform moment, the lateral buckling strength is obtained by multiplying the basic strength in the elastic and inelastic region by C_b as shown in Figure C-F1.2. However, in no case can the maximum moment capacity exceed the plastic moment, M_p. Note that L_p given by Equation F2-5 is merely a definition that has physical meaning only when $C_b = 1.0$. For C_b greater than 1.0, members with larger unbraced lengths can reach M_p, as shown by the curve for $C_b > 1.0$ in Figure C-F1.2. This length is calculated by setting Equation F2-2 equal to M_p and solving for L_b using the actual value of C_b.

Since 1961, the following equation has been used in AISC Specifications to adjust the lateral-torsional buckling equations for variations in the moment diagram within the unbraced length.

$$C_b = 1.75 + 1.05\left(\frac{M_1}{M_2}\right) + 0.3\left(\frac{M_1}{M_2}\right)^2 \qquad \text{(C-F1-1)}$$

where

M_1 = smaller moment at end of unbraced length, kip-in. (N-mm)
M_2 = larger moment at end of unbraced length, kip-in. (N-mm)
(M_1/M_2) is positive when moments cause reverse curvature and negative for single curvature

This equation is only applicable to moment diagrams that consist of straight lines between braced points—a condition that is rare in beam design. The equation provides a lower bound to the solutions developed in Salvadori (1956). Equation C-F1-1 can be easily misinterpreted and misapplied to moment diagrams that are not linear within the unbraced segment. Kirby and Nethercot (1979) present an equation that applies to various shapes of moment diagrams within the unbraced segment. Their original equation has been slightly adjusted to give Equation C-F1-2 (Equation F1-1 in the body of the Specification):

$$C_b = \frac{12.5M_{max}}{2.5M_{max} + 3M_A + 4M_B + 3M_C} \qquad \text{(C-F1-2)}$$

This equation gives a more accurate solution for a fixed-end beam, and gives approximately the same answers as Equation C-F1-1 for moment diagrams with straight lines between points of bracing. C_b computed by Equation C-F1-2 for moment diagrams with other shapes shows good comparison with the more precise but also more complex equations (Ziemian, 2010). The absolute values of the three quarter-point moments and the maximum moment regardless of its location are used in Equation C-F1-2. The maximum moment in the unbraced segment is always used for comparison with the nominal moment, M_n. The length between braces, not the distance to inflection points is used. It is still satisfactory to use C_b from Equation C-F1-1 for straight-line moment diagrams within the unbraced length.

The lateral-torsional buckling modification factor given by Equation C-F1-2 is applicable for doubly symmetric sections and should be modified for application with singly symmetric sections. Previous work considered the behavior of singly-symmetric I-shaped beams subjected to gravity loading (Helwig et al., 1997). The study resulted in the following expression:

$$C_b = \left[\frac{12.5M_{max}}{2.5M_{max} + 3M_A + 4M_B + 3M_C}\right] R_m \leq 3.0 \qquad \text{(C-F1-3)}$$

For single curvature bending: $R_m = 1.0$

For reverse curvature bending:

$$R_m = 0.5 + 2\left(\frac{I_{y\,Top}}{I_y}\right)^2 \qquad \text{(C-F1-4)}$$

where

$I_{y\,Top}$ = moment of inertia of the top flange about an axis through the web, in.^{4} (mm^4)

I_y = moment of inertia of the entire section about an axis through the web, in.^{4} (mm^4)

Since Equation C-F1-3 was developed for gravity loading on beams with a horizontal orientation of the longitudinal axis, the top flange is defined as the flange above the geometric centroid of the section. The term in the brackets of Equation C-F1-3 is identical to Equation C-F1-2 while the factor R_m is a modifier for singly-symmetric sections that is greater than unity when the top flange is the larger flange and less than unity when the top flange is the smaller flange. For singly-symmetric sections subjected to reverse curvature bending, the lateral-torsional buckling strength should be evaluated by separately treating each flange as the compression flange and comparing the available flexural strength with the required moment that causes compression in the flange under consideration.

The C_b factors discussed above are defined as a function of the spacing between braced points. However, many situations arise where a beam may be subjected to reverse curvature bending and have one of the flanges continuously braced laterally by closely spaced joists and/or light gauge decking normally used for roofing or flooring systems. Although the lateral bracing provides significant restraint to one of the flanges, the other flange can still buckle laterally due to the compression caused by the reverse curvature bending. A variety of C_b expressions have been developed that are a function of the type of loading, distribution of the moment, and the support conditions. For gravity loaded beams with the top flange laterally restrained, the following expression is applicable (Yura, 1995; Yura and Helwig, 2009):

$$C_b = 3.0 - \frac{2}{3}\left(\frac{M_1}{M_o}\right) - \frac{8}{3}\left[\frac{M_{CL}}{(M_o + M_1)^*}\right] \qquad \text{(C-F1-5)}$$

where

M_o = moment at the end of the unbraced length that gives the largest compressive stress in the bottom flange, kip-in. (N-mm)

M_1 = moment at other end of the unbraced length, kip-in. (N-mm)

M_{CL} = moment at the middle of the unbraced length, kip-in. (N-mm)

$(M_o + M_1)^*$ = M_o if M_1 is positive

The unbraced length is defined as the spacing between locations where twist is restrained. The sign convention for the moments are shown in Figure C-F1.3. M_o and M_1 are negative as shown in the figure, while M_{CL} is positive. The asterisk on the last term in Equation C-F1-5 indicates that M_1 is taken as zero in the last term if it is positive. For example, considering the distribution of moment shown in Figure C-F1.4, the C_b value would be:

$$C_b = 3.0 - \frac{2}{3}\left(\frac{+200}{-100}\right) - \frac{8}{3}\left(\frac{+50}{-100}\right) = 5.67$$

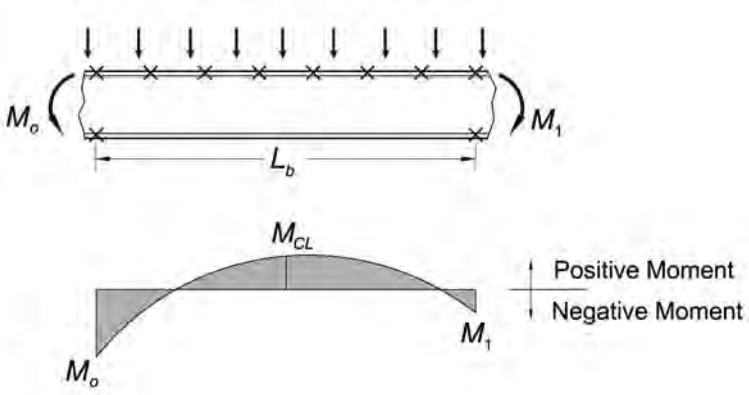

Fig. C-F1.3. Sign convention for moments in Equation C-F1-5.

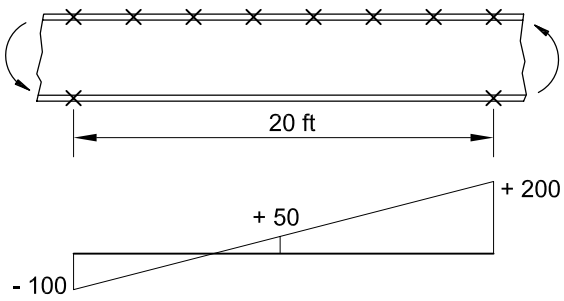

Fig. C-F1.4. Moment diagram for numerical example of application of Equation C-F1-5.

Note that $(M_o + M_1)$* is taken as M_o since M_1 is positive.

In this case, the $C_b = 5.67$ would be used with the lateral-torsional buckling strength for the beam using an unbraced length of 20 ft which is defined by locations where twist or lateral movement of both flanges is restrained.

A similar buckling problem occurs with roofing beams subjected to uplift from wind loading. The light gauge metal decking that is used for the roofing system usually provides continuous restraint to the top flange of the beam; however, the uplift can be large enough to cause the bottom flange to be in compression. The sign convention for the moment is the same as indicated in Figure C-F1.3. The moment must cause compression in the bottom flange (M_{CL} negative) for the beam to buckle. Three different expressions are given in Figure C-F1.5 depending on whether the end moments are positive or negative (Yura and Helwig, 2009). As outlined above, the unbraced length is defined as the spacing between points where both the top and bottom flange are restrained from lateral movement or between points restrained from twist.

The equations for the limit state of lateral-torsional buckling in Chapter F assume that the loads are applied along the beam centroidal axis. C_b may be conservatively

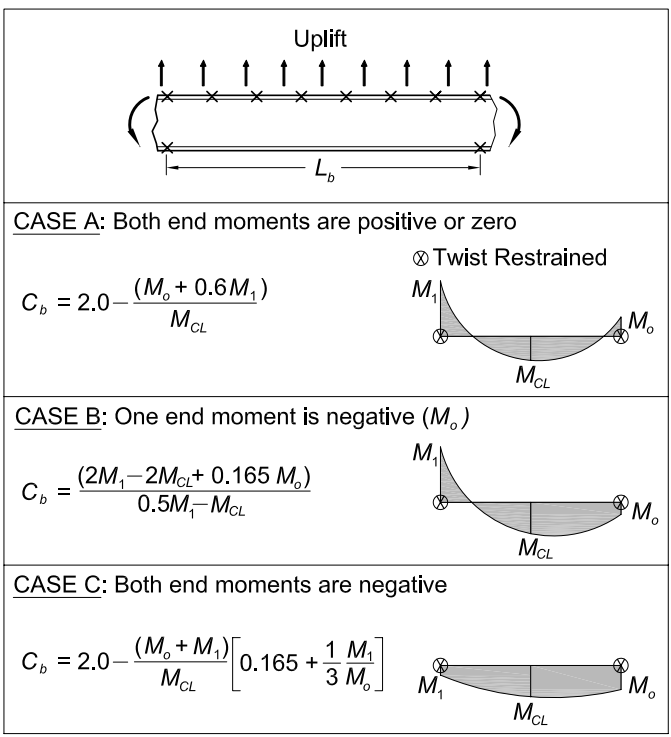

Fig. C-F1.5. C_b *factors for uplift loading on beams with the top flange continuously restrained laterally.*

taken equal to 1.0, with the exception of some cases involving unbraced overhangs or members with no bracing within the span and with significant loading applied to the top flange. If the load is placed on the top flange and the flange is not braced, there is a tipping effect that reduces the critical moment; conversely, if the load is suspended from an unbraced bottom flange, there is a stabilizing effect that increases the critical moment (Ziemian, 2010). For unbraced top flange loading on compact I-shaped members, the reduced critical moment may be conservatively approximated by setting the square root expression in Equation F2-4 equal to unity.

An effective length factor of unity is implied in the critical moment equations to represent the worst-case simply supported unbraced segment. Consideration of any end restraint due to adjacent unbuckled segments on the critical segment can increase its strength. The effects of beam continuity on lateral-torsional buckling have been studied, and a simple conservative design method, based on the analogy to end-restrained nonsway columns with an effective length less than unity, has been proposed (Ziemian, 2010).

F2. DOUBLY SYMMETRIC COMPACT I-SHAPED MEMBERS AND CHANNELS BENT ABOUT THEIR MAJOR AXIS

Section F2 applies to members with compact I-shaped or channel cross sections subject to bending about their major axis; hence, the only limit state to consider is lateral-torsional buckling. Almost all rolled wide-flange shapes listed in the AISC *Steel Construction Manual* (AISC, 2005b) are eligible to be designed by the provisions of this section, as indicated in the User Note in the Specification.

The equations in Section F2 are identical to the corresponding equations in Section F1 of the 1999 *Specification for Structural Steel Buildings—Load and Resistance Factor Design*, hereafter referred to as the 1999 LRFD Specification, (AISC, 2000b) and to the provisions in the 2005 *Specification for Structural Steel Buildings* (AISC, 2005a), hereafter referred to as the 2005 Specification, although they are presented in different form. Table C-F2.1 gives the list of equivalent equations.

The only difference between the 1999 LRFD Specification (AISC, 2000b) and this Specification is that the stress at the interface between inelastic and elastic buckling has been changed from $F_y - F_r$ in the 1999 edition to $0.7F_y$. In the specifications prior to the 2005 Specification the *residual stress*, F_r, for rolled and welded shapes was different, namely 10 ksi (69 MPa) and 16.5 ksi (114 MPa), respectively, while in the 2005 Specification and in this Specification the residual stress is taken as $0.3F_y$ so that the value of $F_y - F_r = 0.7F_y$ is adopted. This change was made in the interest of simplicity with negligible effect on economy.

The elastic lateral-torsional buckling stress, F_{cr}, of Equation F2-4:

$$F_{cr} = \frac{C_b \pi^2 E}{\left(\frac{L_b}{r_{ts}}\right)^2} \sqrt{1 + 0.078 \frac{Jc}{S_x h_o} \left(\frac{L_b}{r_{ts}}\right)^2} \qquad \text{(C-F2-1)}$$

TABLE C-F2.1
Comparison of Equations for Nominal Flexural Strength

1999 AISC LRFD Specification Equations	2005 and 2010 Specification Equations
F1-1	F2-1
F1-2	F2-2
F1-13	F2-3

is identical to Equation F1-13 in the 1999 LRFD Specification:

$$F_{cr} = \frac{M_{cr}}{S_x} = \frac{C_b \pi}{L_b S_x} \sqrt{EI_y GJ + \left(\frac{\pi E}{L_b}\right)^2 I_y C_w} \qquad \text{(C-F2-2)}$$

if $c = 1$ (see Section F2 for definition):

$$r_{ts}^2 = \frac{\sqrt{I_y C_w}}{S_x};\ h_o = d - t_f;\ \text{ and } \frac{2G}{\pi^2 E} = 0.0779$$

Equation F2-5 is the same as Equation F1-4 in the 1999 LRFD Specification, and Equation F2-6 corresponds to Equation F1-6. It is obtained by setting $F_{cr} = 0.7F_y$ in Equation F2-4 and solving for L_b. The format of Equation F2-6 has changed in the 2010 Specification so that it is not undefined at the limit when $J = 0$; otherwise it gives identical results. The term r_{ts} can conservatively be calculated as the radius of gyration of the compression flange plus one-sixth of the web.

These provisions have been simplified when compared to the previous ASD provisions based on a more informed understanding of beam limit states behavior. The maximum allowable stress obtained in these provisions may be slightly higher than the previous limit of $0.66F_y$, since the true plastic strength of the member is reflected by use of the plastic section modulus in Equation F2-1. The Section F2 provisions for unbraced length are satisfied through the use of two equations, one for inelastic lateral-torsional buckling (Equation F2-2), and one for elastic lateral-torsional buckling (Equation F2-3). Previous ASD provisions placed an arbitrary stress limit of $0.6F_y$ when a beam was not fully braced and required that three equations be checked with the selection of the largest stress to determine the strength of a laterally unbraced beam. With the current provisions, once the unbraced length is determined, the member strength can be obtained directly from these equations.

F3. DOUBLY SYMMETRIC I-SHAPED MEMBERS WITH COMPACT WEBS AND NONCOMPACT OR SLENDER FLANGES BENT ABOUT THEIR MAJOR AXIS

Section F3 is a supplement to Section F2 for the case where the flange of the section is noncompact or slender (see Figure C-F1.1, linear variation of M_n between λ_{pf} and λ_{rf}). As pointed out in the User Note of Section F2, very few rolled wide-flange shapes are subject to this criterion.

F4. OTHER I-SHAPED MEMBERS WITH COMPACT OR NONCOMPACT WEBS BENT ABOUT THEIR MAJOR AXIS

The provisions of Section F4 are applicable to doubly symmetric I-shaped beams with noncompact webs and to singly symmetric I-shaped members with compact or noncompact webs (see the Table in User Note F1.1). This section deals with welded I-shaped beams where the webs are not slender. Flanges may be compact, noncompact or slender. The following section, F5, considers welded I-shapes with slender webs. The contents of Section F4 are based on White (2004).

Four limit states are considered: (a) compression flange yielding; (b) lateral-torsional buckling (LTB); (c) flange local buckling (FLB); and (d) tension flange yielding (TFY). The effect of inelastic buckling of the web is taken care of indirectly by multiplying the moment causing yielding in the compression flange by a factor, R_{pc}, and the moment causing yielding in the tension flange by a factor, R_{pt}. These two factors can vary from unity to as high as 1.6. Conservatively, they can be assumed to equal 1.0. The following steps are provided as a guide to the determination of R_{pc} and R_{pt}.

Step 1. Calculate h_p and h_c, as defined in Figure C-F4.1.

Step 2. Determine web slenderness and yield moments in compression and tension:

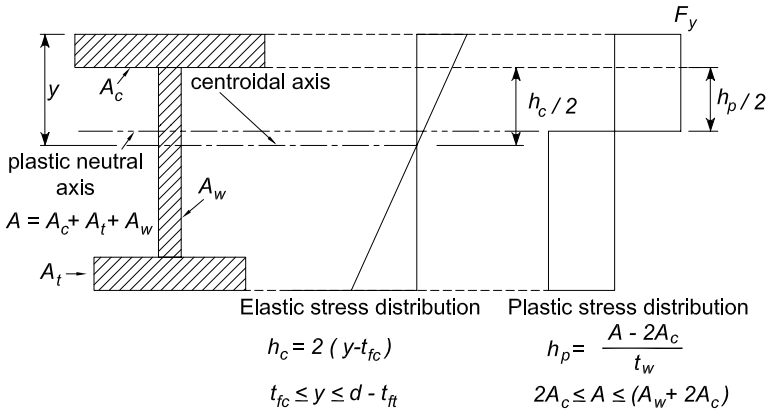

Fig. C-F4.1. Elastic and plastic stress distributions.

$$\left\{\begin{array}{l} \lambda = \dfrac{h_c}{t_w} \\ S_{xc} = \dfrac{I_x}{y};\quad S_{xt} = \dfrac{I_x}{d-y} \\ M_{yc} = F_y S_{xc};\quad M_{yt} = F_y S_{xt} \end{array}\right\} \tag{C-F4-1}$$

Step 3. Determine λ_{pw} and λ_{rw}:

$$\left\{\begin{array}{l} \lambda_{pw} = \dfrac{\dfrac{h_c}{h_p}\sqrt{\dfrac{E}{F_y}}}{\left[\dfrac{0.54M_p}{M_y} - 0.09\right]^2} \le 5.70\sqrt{\dfrac{E}{F_y}} \\ \lambda_{rw} = 5.70\sqrt{\dfrac{E}{F_y}} \end{array}\right\} \tag{C-F4-2}$$

If $\lambda > \lambda_{rw}$, then the web is slender and the design is governed by Section F5.

Step 4. Calculate R_{pc} and R_{pt} using Section F4.

The basic maximum nominal moment is $R_{pc}M_{yc} = R_{pc}F_yS_{xc}$ if the flange is in compression, and $R_{pt}M_{yt} = R_{pt}F_yS_{xt}$ if it is in tension. Thereafter, the provisions are the same as for doubly symmetric members in Sections F2 and F3. For the limit state of lateral-torsional buckling, I-shaped members with cross sections that have unequal flanges are treated as if they were doubly symmetric I-shapes. That is, Equations F2-4 and F2-6 are the same as Equations F4-5 and F4-8, except the former use S_x and the latter use S_{xc}, the elastic section moduli of the entire section and of the compression side, respectively. This is a simplification that tends to be somewhat conservative if the compression flange is smaller than the tension flange, and it is somewhat unconservative when the reverse is true. It is also required to check for tension flange yielding if the tension flange is smaller than the compression flange (Section F4.4).

For a more accurate solution, especially when the loads are not applied at the centroid of the member, the designer is directed to Chapter 5 of the SSRC Guide and other references (Galambos, 2001; White and Jung, 2003; Ziemian, 2010). The following alternative equations in lieu of Equations F4-4, F4-5 and F4-8 are provided by White and Jung:

$$M_n = C_b\frac{\pi^2 EI_y}{L_b^2}\left\{\frac{\beta_x}{2} + \sqrt{\left(\frac{\beta_x}{2}\right)^2 + \frac{C_w}{I_y}\left[1 + 0.0390\frac{J}{C_w}L_b^2\right]}\right\} \tag{C-F4-3}$$

$$L_r = \frac{1.38E\sqrt{I_yJ}}{S_{xc}F_L}\sqrt{\frac{2.6\beta_xF_LS_{xc}}{EJ} + 1 + \sqrt{\left[\frac{2.6\beta_xF_LS_{xc}}{EJ} + 1\right]^2 + \frac{27.0C_w}{I_y}\left(\frac{F_LS_{xc}}{EJ}\right)^2}} \tag{C-F4-4}$$

where the coefficient of monosymmetry, $\beta_x = 0.9h\alpha\left(\frac{I_{yc}}{I_{yt}} - 1\right)$,

the warping constant, $C_w = h^2 I_{yc}\alpha$, and $\alpha = \frac{1}{\frac{I_{yc}}{I_{yt}} + 1}$.

F5. DOUBLY SYMMETRIC AND SINGLY SYMMETRIC I-SHAPED MEMBERS WITH SLENDER WEBS BENT ABOUT THEIR MAJOR AXIS

This section applies to doubly and singly symmetric I-shaped welded plate girders with a slender web, that is, $\frac{h_c}{t_w} > \lambda_r = 5.70\sqrt{\frac{E}{F_y}}$. The applicable limit states are compression flange yielding, lateral-torsional buckling, compression flange local buckling, and tension flange yielding. The provisions in this section have changed little since 1963. The provisions for plate girders are based on research reported in Basler and Thürlimann (1963).

There is no seamless transition between the equations in Section F4 and F5. Thus the bending strength of a girder with F_y = 50 ksi (345 MPa) and a web slenderness h/t_w =137 is not close to that of a girder with h/t_w = 138. These two slenderness ratios are on either side of the limiting ratio. This gap is caused by the discontinuity between the lateral-torsional buckling resistances predicted by Section F4 and those predicted by Section F5 due to the implicit use of $J = 0$ in Section F5. However, for typical noncompact web section members close to the noncompact web limit, the influence of J on the lateral-torsional buckling resistance is relatively small (for example, the calculated L_r values including J versus using $J = 0$ typically differ by less than 10%). The implicit use of $J = 0$ in Section F5 is intended to account for the influence of web distortional flexibility on the lateral-torsional buckling resistance for slender-web I-section members.

F6. I-SHAPED MEMBERS AND CHANNELS BENT ABOUT THEIR MINOR AXIS

I-shaped members and channels bent about their minor axis do not experience lateral-torsional buckling or web buckling. The only limit states to consider are yielding and flange local buckling. The user note informs the designer of the few rolled shapes that need to be checked for flange local buckling.

F7. SQUARE AND RECTANGULAR HSS AND BOX-SHAPED MEMBERS

The provisions for the nominal flexural strength of HSS include the limit states of yielding and local buckling. Square and rectangular HSS are typically not subject to lateral-torsional buckling.

Because of the high torsional resistance of the closed cross section, the critical unbraced lengths, L_p and L_r, that correspond to the development of the plastic moment and the yield moment, respectively, are very large. For example, as shown in Figure C-F7.1, an HSS20×4×$^5/_{16}$ (HSS508×101.6×7.9), which has one of the largest depth-to-width ratios among standard HSS, has L_p of 6.7 ft (2.0 m) and L_r of 137 ft (42 m) as determined in accordance with the 1993 *Load and Resistance Factor Design Specification for Structural Steel Buildings* (AISC, 1993). An extreme deflection limit might correspond to a length-to-depth ratio of 24 or a length of 40 ft (12 m) for this member. Using the specified linear reduction between the plastic moment and the yield moment for lateral-torsional buckling, the plastic moment is reduced by only 7% for the 40-ft (12-m) length. In most practical designs where there is a moment gradient and the lateral-torsional buckling modification factor, C_b, is larger than unity, the reduction will be nonexistent or insignificant.

The provisions for local buckling of noncompact rectangular HSS are also the same as those in the previous sections of this chapter: $M_n = M_p$ for $b/t \le \lambda_p$, and a linear transition from M_p to $F_y S_x$ when $\lambda_p < b/t \le \lambda_r$. The equation for the effective width of the compression flange when b/t exceeds λ_r is the same as that used for rectangular HSS in axial compression except that the stress is taken as the yield stress. This implies that the stress in the corners of the compression flange is at yield when the ultimate post-buckling strength of the flange is reached. When using the effective width, the nominal flexural strength is determined from the effective section modulus to the compression flange using the distance from the shifted neutral axis. A slightly conservative estimate of the nominal flexural strength can be obtained by using the effective width for both the compression and tension flange, thereby maintaining the symmetry of the cross section and simplifying the calculations.

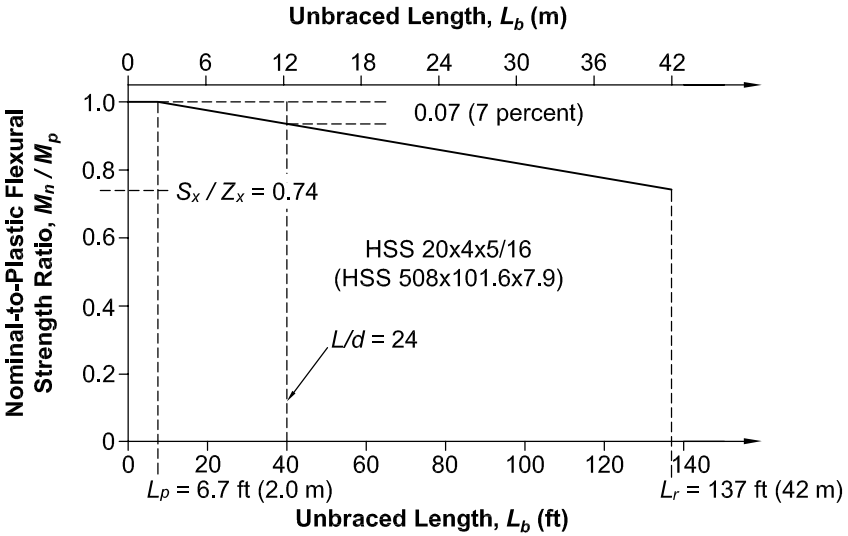

Fig. C-F7.1. Lateral-torsional buckling of rectangular HSS.

F8. ROUND HSS

Round HSS are not subject to lateral-torsional buckling. The failure modes and post-buckling behavior of round HSS can be grouped into three categories (Sherman, 1992; Ziemian, 2010):

(a) For low values of D/t, a long *plastic plateau* occurs in the moment-rotation curve. The cross section gradually ovalizes, local wave buckles eventually form, and the moment resistance subsequently decays slowly. Flexural strength may exceed the theoretical plastic moment due to *strain hardening*.
(b) For intermediate values of D/t, the plastic moment is nearly achieved but a single local buckle develops and the flexural strength decays slowly with little or no plastic plateau region.
(c) For high values of D/t, multiple buckles form suddenly with very little ovalization and the flexural strength drops quickly.

The flexural strength provisions for round HSS reflect these three regions of behavior and are based upon five experimental programs involving hot-formed seamless pipe, electric-resistance-welded pipe, and fabricated tubing (Ziemian, 2010).

F9. TEES AND DOUBLE ANGLES LOADED IN THE PLANE OF SYMMETRY

The lateral-torsional buckling (LTB) strength of singly symmetric tee beams is given by a fairly complex formula (Ziemian, 2010). Equation F9-4 is a simplified formulation based on Kitipornchai and Trahair (1980). See also Ellifritt et al. (1992).

The C_b factor used for I-shaped beams is unconservative for tee beams with the stem in compression. For such cases, $C_b = 1.0$ is appropriate. When beams are bent in reverse curvature, the portion with the stem in compression may control the LTB resistance even though the moments may be small relative to other portions of the unbraced length with $C_b \approx 1.0$. This is because the LTB strength of a tee with the stem in compression may be only about one-fourth of the strength for the stem in tension. Since the buckling strength is sensitive to the moment diagram, C_b has been conservatively taken as 1.0. In cases where the stem is in tension, connection details should be designed to minimize any end restraining moments that might cause the stem to be in compression.

The 2005 Specification did not have provisions for the local buckling strength of the stems of tee sections and the legs of double angle sections under flexural compressive stress gradient. The Commentary to this Section in the 2005 Specification explained that the local buckling strength was accounted for in the equation for the lateral-torsional buckling limit state, Equation F9-4, when the unbraced length, L_b, approached zero. While this is a correct procedure, it led to confusion and to many questions by users of the Specification. For this reason, Section F9.4, "Local Buckling of Tee Stems in Flexural Compression," was added to provide an explicit set of formulas for the 2010 Specification.

The derivation of the formulas is provided here to explain the changes. The classical formula for the elastic buckling of a rectangular plate is (Ziemian, 2010):

$$F_{cr} = \frac{\pi^2 Ek}{12\left(1-\nu^2\right)\left(\frac{b}{t}\right)^2} \qquad \text{(C-F9-1)}$$

where

ν = 0.3 (Poisson's ratio)
b/t = plate width-to-thickness ratio
k = plate buckling coefficient

For the stem of tee sections, the width-to-thickness ratio is equal to d/t_w. The two rectangular plates in Figure C-F9.1 are fixed at the top, free at the bottom and loaded, respectively, with a uniform and a linearly varying compressive stress. The corresponding plate buckling coefficients, k, are 1.33 and 1.61 (Figure 4.4, Ziemian, 2010). The graph in Figure C-F9.2 shows the general scheme used historically in developing the local buckling criteria in AISC Specifications. The ordinate is the critical stress divided by the yield stress, and the abscissa is a nondimensional width-to-thickness ratio,

$$\bar{\lambda} = \frac{b}{t}\sqrt{\frac{F_y}{E}}\sqrt{\frac{12\left(1-\nu^2\right)}{\pi^2 k}} \qquad \text{(C-F9-2)}$$

In the traditional scheme it is assumed the critical stress is the yield stress, F_y, as long as $\bar{\lambda} \le 0.7$. Elastic buckling, governed by Equation C-F9-1 commences when

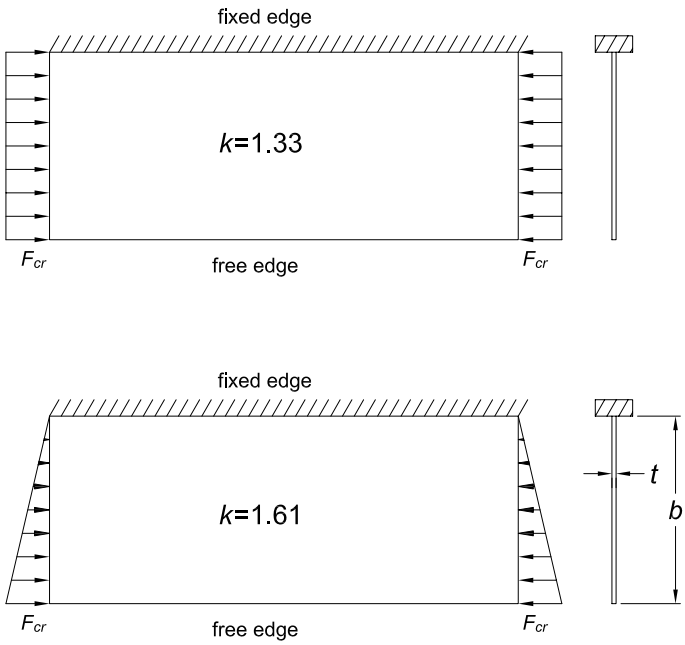

Fig.C-F9.1 Plate buckling coefficients for uniform compression and for linearly varying compressive stresses.

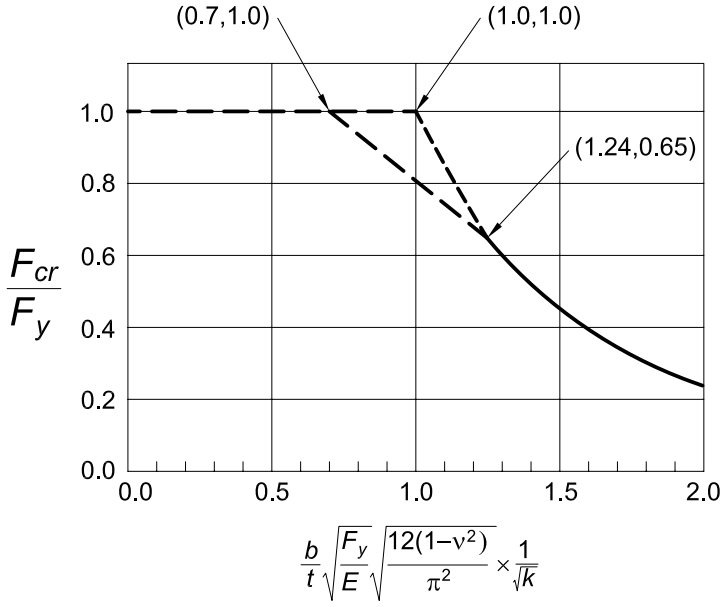

Fig. C-F9.2. General scheme for plate local buckling limit states.

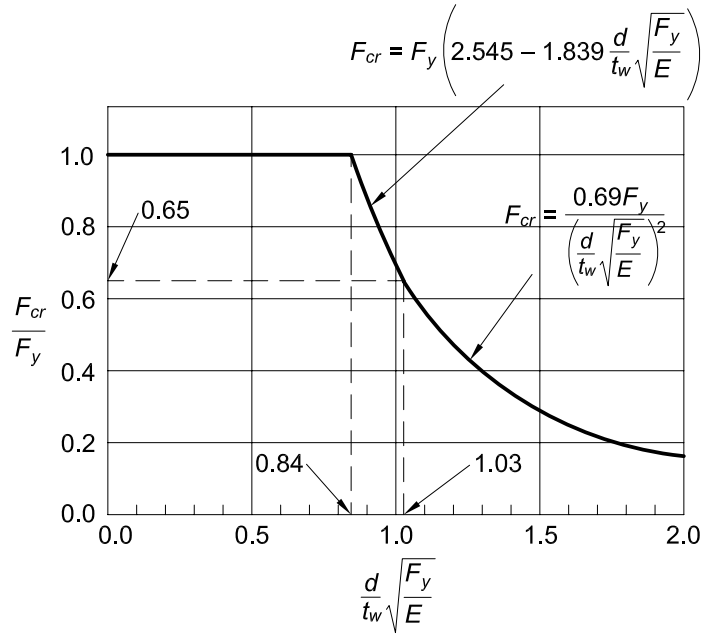

Fig. C-F9.3. Local buckling of tee stem in flexural compression.

$\bar{\lambda} = 1.24$ and $F_{cr} = 0.65F_y$. Between these two points the transition is assumed linear to account for initial deflections and residual stresses. While these assumptions are arbitrary empirical values, they have proven satisfactory. The curve in Figure C-F9.3 shows the graph of the formulas adopted for the stem of tee sections and the legs of double angle sections when these elements are subject to flexural compression. The limiting width-to-thickness ratio up to which $F_{cr} = F_y$ is (using $\nu = 0.3$ and $k = 1.61$):

$$\bar{\lambda} = 0.7 = \frac{b}{t}\sqrt{\frac{F_y}{E}}\sqrt{\frac{12\left(1-\nu^2\right)}{\pi^2 k}} \rightarrow \frac{b}{t} = \frac{d}{t_w} = 0.84\sqrt{\frac{E}{F_y}}$$

The elastic buckling range was assumed to be governed by the same equation as the local buckling of the flanges of a wide-flange beam bent about its minor axis (Equation F6-4):

$$F_{cr} = \frac{0.69E}{\left(\frac{d}{t_w}\right)^2}$$

The underlying plate buckling coefficient for this equation is $k = 0.76$, which is a conservative assumption for tee stems in flexural compression. The straight-line transition between the end of the yield limit and the onset of the elastic buckling range is also indicated in Figure C-F9.3.

Flexure about the *y*-axis of tees and double angles does not occur frequently and is not covered in this Specification. However, guidance is given here to address this condition. The yield limit state and the local buckling limit state of the flange can be checked by using Equations F6-1 through F6-3. Lateral-torsional buckling can conservatively be calculated by assuming the flange acts alone as a rectangular beam, using Equations F11-2 through F11-4. Alternately, an elastic critical moment given as

$$M_e = \frac{\pi}{L_b}\sqrt{EI_xGJ} \qquad \text{(C-F9-3)}$$

may be used in Equations F10-2 or F10-3 to obtain the nominal flexural strength.

F10. SINGLE ANGLES

Flexural strength limits are established for the limit states of yielding, lateral-torsional buckling, and leg local buckling of single-angle beams. In addition to addressing the general case of unequal-leg single angles, the equal-leg angle is treated as a special case. Furthermore, bending of equal-leg angles about a geometric axis, an axis parallel to one of the legs, is addressed separately as it is a common case of angle bending.

The tips of an angle refer to the free edges of the two legs. In most cases of unrestrained bending, the flexural stresses at the two tips will have the same sign (tension or compression). For constrained bending about a geometric axis, the tip stresses will

differ in sign. Provisions for both tension and compression at the tip should be checked as appropriate, but in most cases it will be evident which controls.

Appropriate serviceability limits for single-angle beams need also to be considered. In particular, for longer members subjected to unrestrained bending, deflections are likely to control rather than lateral-torsional buckling or leg local buckling strength.

The provisions in this section follow the general format for nominal flexural resistance (see Figure C-F1.2). There is a region of full plastification, a linear transition to the yield moment, and a region of local buckling.

1. Yielding

The strength at full yielding is limited to a shape factor of 1.50 applied to the yield moment. This leads to a lower bound plastic moment for an angle that could be bent about any axis, inasmuch as these provisions are applicable to all flexural conditions. The 1.25 factor originally used was known to be a conservative value. Research work (Earls and Galambos, 1997) has indicated that the 1.50 factor represents a better lower bound value. Since the shape factor for angles is in excess of 1.50, the nominal design strength, $M_n = 1.5M_y$, for compact members is justified provided that instability does not control.

2. Lateral-Torsional Buckling

Lateral-torsional buckling may limit the flexural strength of an unbraced single-angle beam. As illustrated in Figure C-F10.1, Equation F10-2 represents the elastic buckling portion with the maximum nominal flexural strength, M_n, equal to 75% of the theoretical buckling moment, M_e. Equation F10-3 represents the inelastic buckling transition expression between $0.75M_y$ and $1.5M_y$. The maximum beam flexural strength $M_n = 1.5M_y$ will occur when the theoretical buckling moment, M_e, reaches or exceeds $7.7M_y$. M_y is the moment at first yield in Equations F10-2 and F10-3, the

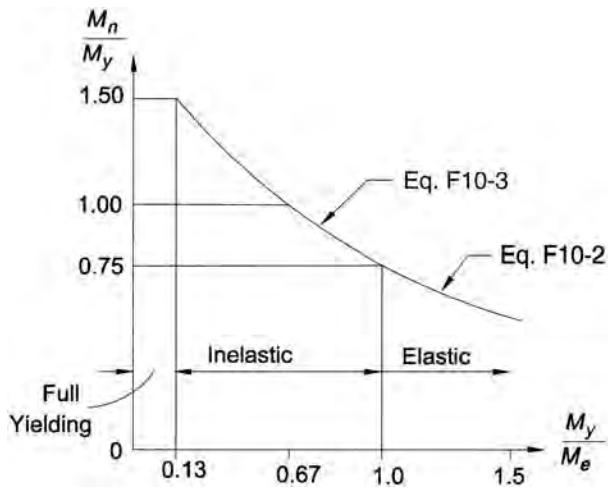

Fig. C-F10.1. Lateral-torsional buckling limits of a single-angle beam.

same as the M_y in Equation F10-1. These equations are modifications of those developed from the results of Australian research on single angles in flexure and on an analytical model consisting of two rectangular elements of length equal to the actual angle leg width minus one-half the thickness (AISC, 1975; Leigh and Lay, 1978, 1984; Madugula and Kennedy, 1985).

When bending is applied about one leg of a laterally unrestrained single angle, the angle will deflect laterally as well as in the bending direction. Its behavior can be evaluated by resolving the load and/or moments into principal axis components and determining the sum of these principal axis flexural effects. Subsection (a) of Section F10.2(iii) is provided to simplify and expedite the calculations for this common situation with equal-leg angles. For such unrestrained bending of an equal-leg angle, the resulting maximum normal stress at the angle tip (in the direction of bending) will be approximately 25% greater than the calculated stress using the geometric axis section modulus. The value of M_e given by Equations F10-6a and F10-6b and the evaluation of M_y using 0.80 of the geometric axis section modulus reflect bending about the inclined axis shown in Figure C-F10.2.

The deflection calculated using the geometric axis moment of inertia has to be increased 82% to approximate the total deflection. Deflection has two components: a vertical component (in the direction of applied load) of 1.56 times the calculated value and a horizontal component of 0.94 times the calculated value. The resultant total deflection is in the general direction of the weak principal axis bending of the angle (see Figure C-F10.2). These unrestrained bending deflections should be considered in evaluating serviceability and will often control the design over lateral-torsional buckling.

The horizontal component of deflection being approximately 60% of the vertical deflection means that the lateral restraining force required to achieve purely vertical

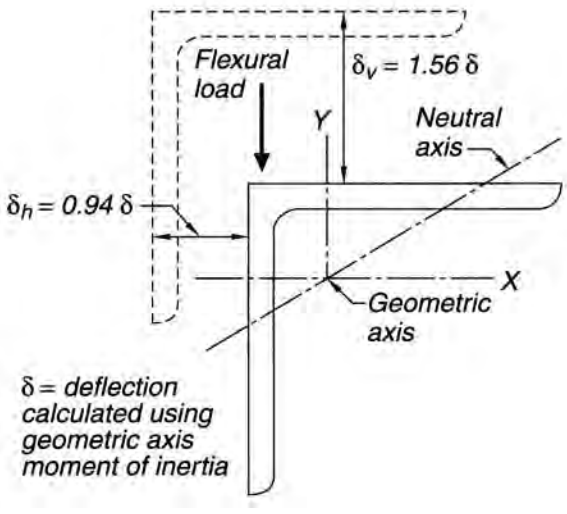

Fig. C-F10.2. Geometric axis bending of laterally unrestrained equal-leg angles.

deflection must be 60% of the applied load value (or produce a moment 60% of the applied value), which is very significant.

Lateral-torsional buckling is limited by M_e (Leigh and Lay, 1978, 1984) as defined in Equation F10-6a, which is based on

$$M_{cr} = \frac{2.33Eb^4t}{(1+3\cos^2\theta)(KL)^2}\left[\sqrt{\sin^2\theta + \frac{0.156(1+3\cos^2\theta)(KL)^2t^2}{b^4}} + \sin\theta\right] \qquad \text{(C-F10-1)}$$

(the general expression for the critical moment of an equal-leg angle) with $\theta = -45°$ for the condition where the angle tip stress is compressive (see Figure C-F10.3). Lateral-torsional buckling can also limit the flexural strength of the cross section when the maximum angle tip stress is tensile from geometric axis flexure, especially with use of the flexural strength limits in Section F10.2. Using $\theta = 45°$ in Equation C-F10-1, the resulting expression is Equation F10-6b with a +1 instead of −1 as the last term.

Stress at the tip of the angle leg parallel to the applied bending axis is of the same sign as the maximum stress at the tip of the other leg when the single angle is unrestrained. For an equal-leg angle this stress is about one-third of the maximum stress. It is only necessary to check the nominal bending strength based on the tip of the angle leg with the maximum stress when evaluating such an angle. If an angle is subjected to an axial compressive load, the flexural limits obtained from Section F10.2(iii) cannot be used due to the inability to calculate a proper moment magnification factor for use in the interaction equations.

For unequal-leg angles and for equal-leg angles in compression without lateral-torsional restraint, the applied load or moment must be resolved into components along the two principal axes in all cases and design must be for *biaxial bending* using the interaction equations in Chapter H.

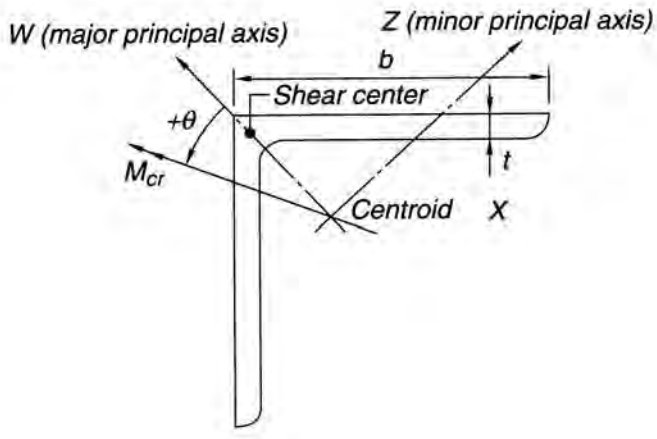

Fig. C-F10.3. Equal-leg angle with general moment loading.

Under major axis bending of equal-leg angles, Equation F10-4 in combination with Equations F10-2 and F10-3 controls the available moment against overall lateral-torsional buckling of the angle. This is based on M_{cr} given in Equation C-F10-1 with $\theta = 0°$.

Lateral-torsional buckling for this case will reduce the stress below $1.5M_y$ only for $L/t \geq 3{,}675C_b/F_y$ ($M_e = 7.7M_y$). If the Lt/b^2 parameter is small (less than approximately $0.87C_b$ for this case), local buckling will control the available moment and M_n based on lateral-torsional buckling need not be evaluated. Local buckling must be checked using Section F10.3.

Lateral-torsional buckling about the major principal *w*-axis of an unequal-leg angle is controlled by M_e in Equation F10-5. The section property, β_w, reflects the location of the shear center relative to the principal axis of the section and the bending direction under uniform bending. Positive β_w and maximum M_e occur when the shear center is in flexural compression while negative β_w and minimum M_e occur when the shear center is in flexural tension (see Figure C-F10.4). This β_w effect is consistent with behavior of singly symmetric I-shaped beams, which are more stable when the compression flange is larger than the tension flange. For principal *w*-axis bending of equal-leg angles, β_w is equal to zero due to symmetry and Equation F10-5 reduces to Equation F10-4 for this special case.

For reverse curvature bending, part of the unbraced length has positive β_w, while the remainder has negative β_w; conservatively, the negative value is assigned for that entire unbraced segment.

The factor β_w is essentially independent of angle thickness (less than 1% variation from mean value) and is primarily a function of the leg widths. The average values shown in Table C-F10.1 may be used for design.

3. Leg Local Buckling

The *b/t* limits have been modified to be more representative of flexural limits rather than using those for single angles under uniform compression. Typically the flexural

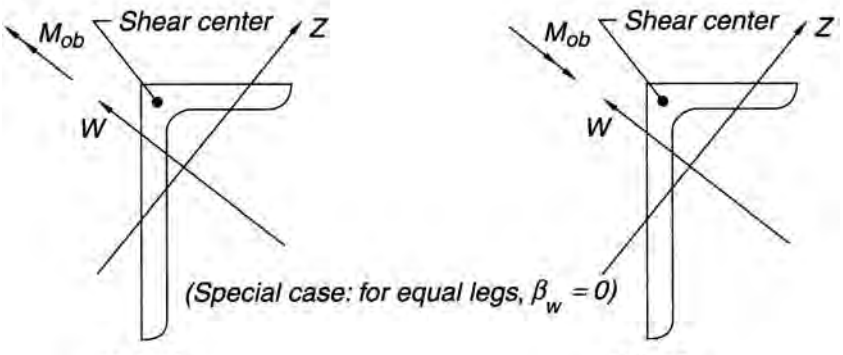

(a) $+\beta_w$ (b) $-\beta_w$

Fig. C-F10.4. Unequal-leg angle in bending.

TABLE C-F10.1
β_w Values for Angles

Angle size in. (mm)	β_w in. (mm)*
8 × 6 (203 × 152) 8 × 4 (203 × 102)	3.31 (84.1) 5.48 (139)
7 × 4 (178 × 102)	4.37 (111)
6 × 4 (152 × 102) 6 × 3½ (152 × 89)	3.14 (79.8) 3.69 (93.7)
5 × 3½ (127 × 89) 5 × 3 (127 × 76)	2.40 (61.0) 2.99 (75.9)
4 × 3½ (102 × 89) 4 × 3 (102 × 76)	0.87 (22.1) 1.65 (41.9)
3½ × 3 (89 × 76) 3½ × 2½ (89 × 64)	0.87 (22.1) 1.62 (41.1)
3 × 2½ (76 × 64) 3 × 2 (76 × 51)	0.86 (21.8) 1.56 (39.6)
2½ × 2 (64 × 51)	0.85 (21.6)
2½ × 1½ (64 × 38)	1.49 (37.8)
Equal legs	0.00

*$\beta_w = \dfrac{1}{I_w}\int_A z\left(w^2 + z^2\right)dA - 2z_o$

where

z_o = coordinate along the z-axis of the shear center with respect to the centroid, in. (mm)
I_w = moment of inertia for the major principal axis, in.^{4} (mm^4)
β_w has a positive or negative value depending on the direction of bending (see Figure C-F10.4).

stresses will vary along the leg length permitting the use of the stress limits given. Even for the geometric axis flexure case, which produces uniform compression along one leg, use of these limits will provide a conservative value when compared to the results reported in Earls and Galambos (1997).

F11. RECTANGULAR BARS AND ROUNDS

The provisions in Section F11 apply to solid bars with round and rectangular cross section. The prevalent limit state for such members is the attainment of the full plastic moment, M_p. The exception is the lateral-torsional buckling of rectangular bars where the depth is larger than the width. The requirements for design are identical to those given previously in Table A-F1.1 in the 1999 LRFD Specification and the same as those given in the 2005 *Specification for Structural Steel Buildings* (AISC, 2005a). Since the shape factor for a rectangular cross section is 1.5 and for a round section is 1.7, consideration must be given to serviceability issues such as excessive deflection or permanent deformation under service-load conditions.

F12. UNSYMMETRICAL SHAPES

When the design engineer encounters beams that do not contain an axis of symmetry, or any other shape for which there are no provisions in the other sections of Chapter F, the stresses are to be limited by the yield stress or the elastic buckling stress. The stress distribution and/or the elastic buckling stress must be determined from principles of structural mechanics, textbooks or handbooks, such as the SSRC Guide (Ziemian, 2010), papers in journals, or finite element analyses. Alternatively, the designer can avoid the problem by selecting cross sections from among the many choices given in the previous sections of Chapter F.

F13. PROPORTIONS OF BEAMS AND GIRDERS

1. Strength Reductions for Members with Holes in the Tension Flange

Historically, provisions for proportions of rolled beams and girders with holes in the tension flange were based upon either a percentage reduction independent of material strength or a calculated relationship between the tension rupture and tension yield strengths of the flange, with resistance factors or safety factors included in the calculation. In both cases, the provisions were developed based upon tests of steel with a specified minimum yield stress of 36 ksi (250 MPa) or less.

More recent tests (Dexter and Altstadt, 2004; Yuan et al., 2004) indicate that the flexural strength on the net section is better predicted by comparison of the quantities F_yA_{fg} and F_uA_{fn}, with slight adjustment when the ratio of F_y to F_u exceeds 0.8. If the holes remove enough material to affect the member strength, the critical stress is adjusted from F_y to (F_uA_{fn}/A_{fg}) and this value is conservatively applied to the elastic section modulus, S_x.

The resistance factor and safety factor used throughout this chapter, $\phi = 0.90$ and $\Omega = 1.67$, are those normally applied for the limit state of yielding. In the case of rupture of the tension flange due to the presence of holes, the provisions of this chapter continue to apply the same resistance and safety factors. Since the effect of Equation F13-1 is to multiply the elastic section modulus by a stress that is always less than the yield stress, it can be shown that this resistance and safety factor always give conservative results when $Z/S \leq 1.2$. It can also be shown to be conservative when $Z/S > 1.2$ and a more accurate model for the rupture strength is used (Geschwindner, 2010a).

2. Proportioning Limits for I-Shaped Members

The provisions of this section were taken directly from Appendix G Section G1 of the 1999 LRFD Specification and are the same as the 2005 *Specification for Structural Steel Buildings* (AISC, 2005a). They have been part of the plate-girder design requirements since 1963 and are derived from Basler and Thürlimann (1963). The web depth-to-thickness limitations are provided so as to prevent the flange from buckling into the web. Equation F13-4 was slightly modified from the corresponding Equation A-G1-2 in the 1999 LRFD Specification to recognize the change in the definition of residual stress from a constant 16.5 ksi (114 MPa) to 30% of the yield stress in the 2005 Specification, as shown by the following derivation:

$$\frac{0.48E}{\sqrt{F_y\left(F_y+16.5\right)}} \approx \frac{0.48E}{\sqrt{F_y\left(F_y+0.3F_y\right)}} = \frac{0.42E}{F_y} \qquad \text{(C-F13-1)}$$

3. Cover Plates

Cover plates need not extend the entire length of the beam or girder. The end connection between the cover plate and beam must be designed to resist the full force in the cover plate at the theoretical cutoff point. The end force in a cover plate on a beam whose required strength exceeds the available yield strength, $\phi M_y = \phi F_y S_x$ (LFRD) or $M_y/\Omega = F_y S_x/\Omega$ (ASD), of the combined shape can be determined by an elastic-plastic analysis of the cross section but can conservatively be taken as the full yield strength of the cover plate for LRFD or the full yield strength of the cover plate divided by 1.5 for ASD. The forces in a cover plate on a beam whose required strength does not exceed the available yield strength of the combined section can be determined using the elastic distribution, MQ/I.

The requirements for minimum weld lengths on the sides of cover plates at each end reflect uneven stress distribution in the welds due to shear lag in short connections.

5. Unbraced Length for Moment Redistribution

The moment redistribution provisions of Section B3.7 refer to this section for setting the maximum unbraced length when moments are to be redistributed. These provisions have been a part of the Specification since the 1949 edition. Portions of members that would be required to rotate inelastically while the moments are redistributed need more closely spaced bracing than similar parts of a continuous beam. Equations F13-8 and F13-9 define the maximum permitted unbraced length in the vicinity of redistributed moment for doubly symmetric and singly symmetric I-shaped members with a compression flange equal to or larger than the tension flange bent about their major axis, and for solid rectangular bars and symmetric box beams bent about their major axis, respectively. These equations are identical to those in Appendix 1 of the 2005 *Specification for Structural Steel Buildings* (AISC, 2005a) and the 1999 LRFD Specification, and are based on research reported in Yura et al. (1978). They are different from the corresponding equations in Chapter N of the 1989 *Specification for Structural Steel Buildings—Allowable Stress Design and Plastic Design* (AISC, 1989).

CHAPTER G
DESIGN OF MEMBERS FOR SHEAR

G1. GENERAL PROVISIONS

Chapter G applies to webs of singly or doubly symmetric members subject to shear in the plane of the web, single angles and HSS, and shear in the weak direction of singly or doubly symmetric shapes.

Two methods for determining the shear strength of singly or doubly symmetric I-shaped beams and built-up sections are presented. The method of Section G2 does not utilize the post-buckling strength of the web, while the method of Section G3 utilizes the post-buckling strength.

G2. MEMBERS WITH UNSTIFFENED OR STIFFENED WEBS

Section G2 deals with the shear strength of webs of wide-flange or I-shaped members, as well as webs of tee-shapes, that are subject to shear and bending in the plane of the web. The provisions in Section G2 apply to the general case when an increase of strength due to tension field action is not permitted. Conservatively, these provisions may be applied also when it is not desired to use the tension field action enhancement for convenience in design. Consideration of the effect of bending on the shear strength is not required because the effect is deemed negligible.

1. Shear Strength

The nominal shear strength of a web is defined by Equation G2-1, a product of the shear yield force, $0.6F_yA_w$, and the shear-buckling reduction factor, C_v.

The provisions of Case (a) in Section G2.1 for rolled I-shaped members with $h/t_w \le 2.24\sqrt{E/F_y}$ are similar to the 1999 and earlier LRFD provisions, with the exception that ϕ has been increased from 0.90 to 1.00 (with a corresponding decrease of the safety factor from 1.67 to 1.50), thus making these provisions consistent with the 1989 provisions for allowable stress design (AISC, 1989). The value of ϕ of 1.00 is justified by comparison with experimental test data and recognizes the minor consequences of shear yielding, as compared to those associated with tension and compression yielding, on the overall performance of rolled I-shaped members. This increase is applicable only to the shear yielding limit state of rolled I-shaped members.

Case (b) in Section G2.1 uses the shear buckling reduction factor, C_v, shown in Figure C-G2.1.The curve for C_v has three segments.

For webs with $h/t_w \le 1.10\sqrt{k_vE/F_{yw}}$, the nominal shear strength, V_n, is based on shear yielding of the web, with C_v given by Equation G2-3. This h/t_w limit was

determined by setting the critical stress causing shear buckling, F_{cr}, equal to the yield stress of the web, $F_{yw} = F_y$, in Equation 35 of Cooper et al. (1978).

When $h/t_w > 1.10\sqrt{k_v E/F_{yw}}$, the web shear strength is based on buckling. It has been suggested to take the proportional limit as 80% of the yield stress of the web (Basler, 1961). This corresponds to $h/t_w = (1.10/0.8)\left(\sqrt{k_v E/F_{yw}}\right)$.

When $h/t_w > 1.37\sqrt{k_v E/F_{yw}}$, the web strength is determined from the elastic buckling stress given by Equation 6 of Cooper at al. (1978) and Equation 9-7 in Timoshenko and Gere (1961):

$$F_{cr} = \frac{\pi^2 E k_v}{12\left(1-\nu^2\right)\left(h/t_w\right)^2} \qquad \text{(C-G2-1)}$$

C_v in Equation G2-5 was obtained by dividing F_{cr} from Equation C-G2-1 by $0.6F_y$ and using $\nu = 0.3$.

The inelastic buckling transition for C_v (Equation G2-4) is used between the limits given by $1.10\sqrt{k_v E/F_y} < h/t_w \le 1.37\sqrt{k_v E/F_y}$

The plate buckling coefficient, k_v, for panels subject to pure shear having simple supports on all four sides is given by Equation 4.3 in Ziemian (2010).

$$k_v = \begin{Bmatrix} 4.00 + \dfrac{5.34}{(a/h)^2} & \text{for } a/h \le 1 \\ 5.34 + \dfrac{4.00}{(a/h)^2} & \text{for } a/h > 1 \end{Bmatrix} \qquad \text{(C-G2-2)}$$

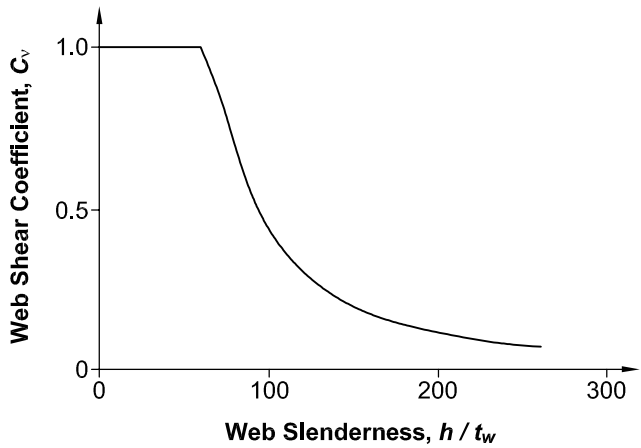

Fig. C-G2.1. Shear buckling coefficient C_v *for* F_y *= 50 ksi (345 MPa) and* k_v *= 5.0.*

For practical purposes and without loss of accuracy, these equations have been simplified herein and in AASHTO (2010) to

$$k_v = 5 + \frac{5}{(a/h)^2} \qquad \text{(C-G2-3)}$$

When the panel ratio, a/h, becomes large, as in the case of webs without transverse stiffeners, then $k_v = 5$. Equation C-G2-3 applies as long as there are flanges on both edges of the web. For tee-shaped beams, the free edge is unrestrained and for this situation $k_v = 1.2$ (JCRC, 1971).

The provisions of Section G2.1 assume monotonically increasing loads. If a flexural member is subjected to load reversals causing cyclic yielding over large portions of a web, such as may occur during a major earthquake, special design considerations may apply (Popov, 1980).

2. Transverse Stiffeners

When transverse stiffeners are needed, they must be rigid enough to cause a buckling node line to form at the stiffener. This requirement applies whether or not tension field action is counted upon. The required moment of inertia of the stiffener is the same as in AASHTO (2010), but it is different from the formula in the 1989 *Specification for Structural Steel Buildings—Allowable Stress Design* (AISC, 1989). Equation G2-7 is derived in Chapter 11 of Salmon and Johnson (1996). The origin of the formula can be traced to Bleich (1952).

G3. TENSION FIELD ACTION

The provisions of Section G3 apply when it is intended to account for the enhanced strength of webs of built-up members due to tension field action.

1. Limits on the Use of Tension Field Action

The panels of the web of a built-up member, bounded on the top and bottom by the flanges and on each side by the transverse stiffeners, are capable of carrying loads far in excess of their "web buckling" load. Upon reaching the theoretical web buckling limit, slight lateral web displacements will have developed. These deformations are of no structural significance, because other means are still present to provide further strength.

When transverse stiffeners are properly spaced and are stiff enough to resist out-of-plane movement of the postbuckled web, significant diagonal tension fields form in the web panels prior to the shear resistance limit. The web in effect acts like a Pratt truss composed of tension diagonals and compresson verticals that are stabilized by the transverse stiffeners. This effective Pratt truss furnishes the strength to resist applied shear forces unaccounted for by the linear buckling theory.

The key requirement in the development of tension field action in the web of plate girders is the ability of the stiffeners to provide sufficient flexural rigidity to stabilize the web along their length. In the case of end panels there is a panel only on one side. The anchorage of the tension field is limited in many situations at these locations and

is thus neglected. In addition, the enhanced resistance due to tension field forces is reduced when the panel aspect ratio becomes large. For this reason the inclusion of tension field action is not permitted when a/h exceeds 3.0 or $[260/(h/t_w)]^2$.

AISC Specifications prior to 2005 have required explicit consideration of the interaction between the flexural and shear strengths when the web is designed using tension field action. White et al. (2008) show that the interaction between the shear and flexural resistances is negligible when the requirements $2A_w/(A_{fc} + A_{ft}) \leq 2.5$ and $h/b_f \leq 6$ are satisfied. Section G3.1 disallows the use of tension field action for I-section members with relatively small flange-to-web proportions identified by these limits. Similar limits are specified in AASHTO (2010); furthermore, AASHTO (2010) allows the use of a reduced "true Basler" tension field resistance for cases where these limits are violated.

2. Shear Strength with Tension Field Action

Analytical methods based on tension field action have been developed (Basler and Thürlimann, 1963; Basler, 1961) and corroborated in an extensive program of tests (Basler et al., 1960). Equation G3-2 is based on this research. The second term in the bracket represents the relative increase of the panel shear strength due to tension field action. The merits of Equation G3-2 relative to various alternative representations of web shear resistance are evaluated and Equation G3-2 is recommended in White and Barker (2008).

3. Transverse Stiffeners

The vertical component of the tension field force that is developed in the web panel must be resisted by the transverse stiffener. In addition to the rigidity required to keep the line of the stiffener as a nonmoving point for the buckled panel, as provided for in Section G2.2, the stiffener must also have a large enough area to resist the tension field reaction.

Numerous studies (Horne and Grayson, 1983; Rahal and Harding, 1990a, 1990b, 1991; Stanway et al., 1993, 1996; Lee et al., 2002b; Xie and Chapman, 2003; Kim et al., 2007) have shown that transverse stiffeners in I-girders designed for tension field action are loaded predominantly in bending due to the restraint they provide to lateral deflection of the web. Generally, there is evidence of some axial compression in the transverse stiffeners due to the tension field, but even in the most slender web plates permitted by this Specification; the effect of the axial compression transmitted from the postbuckled web plate is typically minor compared to the lateral loading effect. Therefore, the transverse stiffener area requirement from prior Specifications is no longer specified. Rather, the demands on the stiffener flexural rigidity are increased in situations where the tension field action of the web is developed. Equation G3-4 is the same requirement as specified in AASHTO (2010).

G4. SINGLE ANGLES

Shear stresses in single-angle members are the result of the gradient of the bending moment along the length (flexural shear) and the torsional moment.

The maximum elastic stress due to flexural shear is

$$f_v = \frac{1.5V_b}{bt} \qquad \text{(C-G4-1)}$$

where V_b is the component of the shear force parallel to the angle leg with width b and thickness t. The stress is constant throughout the thickness, and it should be calculated for both legs to determine the maximum. The coefficient 1.5 is the calculated value for equal leg angles loaded along one of the principal axes. For equal leg angles loaded along one of the geometric axes, this factor is 1.35. Factors between these limits may be calculated conservatively from V_bQ/It to determine the maximum stress at the neutral axis. Alternatively, if only flexural shear is considered, a uniform flexural shear stress in the leg of V_b/bt may be used due to inelastic material behavior and stress redistribution.

If the angle is not laterally braced against twist, a torsional moment is produced equal to the applied transverse load times the perpendicular distance, e, to the shear center, which is at the point of intersection of the centerlines of the two legs. Torsional moments are resisted by two types of shear behavior: pure torsion (*St. Venant torsion*) and *warping torsion* [see Seaburg and Carter (1997)]. The shear stresses due to restrained warping are small compared to the St. Venant torsion (typically less than 20%) and they can be neglected for practical purposes. The applied torsional moment is then resisted by pure shear stresses that are constant along the width of the leg (except for localized regions at the toe of the leg), and the maximum value can be approximated by

$$f_v = \frac{M_T t}{J} = \frac{3M_T}{At} \qquad \text{(C-G4-2)}$$

where

A = angle cross-sectional area, in.^{2} (mm^2)
J = torsional constant [approximated by $\Sigma(bt^3/3)$ when precomputed value is unavailable], in.^{4} (mm^4)
M_T = torsional moment, kip-in. (N-mm)

For a study of the effects of warping, see Gjelsvik (1981). Torsional moments from laterally unrestrained transverse loads also produce warping normal stresses that are superimposed on the bending stresses. However, since the warping strength of single angles is relatively small, this additional bending effect, just like the warping shear effect, can be neglected for practical purposes.

G5. RECTANGULAR HSS AND BOX-SHAPED MEMBERS

The two webs of a closed rectangular cross section resist shear the same way as the single web of an I-shaped plate girder or wide-flange beam, and therefore, the provisions of Section G2 apply.

G6. ROUND HSS

Little information is available on round HSS subjected to transverse shear and the recommendations are based on provisions for local buckling of cylinders due to torsion. However, since torsion is generally constant along the member length and transverse shear usually has a gradient; it is recommended to take the critical stress for transverse shear as 1.3 times the critical stress for torsion (Brockenbrough and Johnston, 1981; Ziemian, 2010). The torsion equations apply over the full length of the member, but for transverse shear it is reasonable to use the length between the points of maximum and zero shear force. Only thin HSS may require a reduction in the shear strength based upon first shear yield. Even in this case, shear will only govern the design of round HSS for the case of thin sections with short spans.

In the equation for the nominal shear strength, V_n, of round HSS, it is assumed that the shear stress at the neutral axis, calculated as VQ/lb, is at F_{cr}. For a thin round section with radius R and thickness t, $I = \pi R^3 t$, $Q = 2R^2 t$ and $b = 2t$. This gives the stress at the centroid as $V/\pi Rt$, in which the denominator is recognized as half the area of the round HSS.

G7. WEAK AXIS SHEAR IN DOUBLY SYMMETRIC AND SINGLY SYMMETRIC SHAPES

The nominal weak axis shear strength of doubly and singly symmetric I-shapes is governed by the equations of Section G2 with the plate buckling coefficient equal to $k_v = 1.2$, the same as the web of a tee-shape. The maximum plate slenderness of all rolled shapes is $b/t_f = b_f/2t_f = 13.8$, and for $F_y = 100$ ksi (690 MPa) the value of $1.10\sqrt{k_v E / F_y} = 1.10\sqrt{(1.2)(29{,}000\,\text{ksi})/100} = 20.5$. Thus $C_v = 1.0$, except for built-up shapes with very slender flanges.

G8. BEAMS AND GIRDERS WITH WEB OPENINGS

Web openings in structural floor members may be used to accommodate various mechanical, electrical and other systems. Strength limit states, including local buckling of the compression flange or of the web, local buckling or yielding of the tee-shaped compression zone above or below the opening, lateral buckling and moment-shear interaction, or serviceability may control the design of a flexural member with web openings. The location, size and number of openings are important and empirical limits for them have been identified. One general procedure for assessing these effects and the design of any needed reinforcement for both steel and composite beams is given in the ASCE *Specification for Structural Steel Beams with Web Openings* (ASCE, 1999), with background information provided in AISC Design Guide 2 by Darwin (1990) and in ASCE Task Committee on Design Criteria for Composite Structures in Steel and Concrete (1992a, 1992b).

CHAPTER H

DESIGN OF MEMBERS FOR COMBINED FORCES AND TORSION

Chapters D, E, F and G of this Specification address members subject to only one type of force: axial tension, axial compression, flexure and shear, respectively. Chapter H addresses members subject to a combination of two or more of the individual forces defined above, as well as possibly by additional forces due to torsion. The provisions fall into two categories: (a) the majority of the cases that can be handled by an interaction equation involving sums of ratios of required strengths to the available strengths; and (b) cases where the stresses due to the applied forces are added and compared to limiting buckling or yield stresses. Designers will have to consult the provisions of Sections H2 and H3 only in rarely occurring cases.

H1. DOUBLY AND SINGLY SYMMETRIC MEMBERS SUBJECT TO FLEXURE AND AXIAL FORCE

1. Doubly and Singly Symmetric Members Subject to Flexure and Compression

Section H1 contains design provisions for doubly symmetric and singly symmetric members under combined flexure and compression and under combined flexure and tension. The provisions of Section H1 apply typically to rolled wide-flange shapes, channels, tee-shapes, round, square and rectangular HSS, solid rounds, squares, rectangles or diamonds, and any of the many possible combinations of doubly or singly symmetric shapes fabricated from plates and/or shapes by welding or bolting. The interaction equations accommodate flexure about one or both principal axes as well as axial compression or tension.

In 1923, the first AISC Specification required that the stresses due to flexure and compression be added and that the sum not exceed the allowable value. An interaction equation appeared first in the 1936 Specification, stating "Members subject to both axial and bending stresses shall be so proportioned that the quantity $\frac{f_a}{F_a}+\frac{f_b}{F_b}$ shall not exceed unity," in which F_a and F_b are, respectively, the axial and flexural allowable stresses permitted by this Specification, and f_a and f_b are the corresponding stresses due to the axial force and the bending moment, respectively. This linear interaction equation was in force until the 1961 Specification, when it was modified to account for frame stability and for the P-δ effect, that is, the secondary bending between the ends of the members (Equation C-H1-1). The P-Δ effect, that is, the second-order bending moment due to story sway, was not accommodated.

$$\frac{f_a}{F_a}+\frac{C_m f_b}{\left(1-\frac{f_a}{F'_e}\right)F_b}\le 1.0 \qquad \text{(C-H1-1)}$$

The allowable axial stress, F_a, was determined for an effective length that is larger than unity for moment frames. The term $\frac{1}{1-\frac{f_a}{F_e'}}$ is the amplification of the interspan moment due to member deflection multiplied by the axial force (the P-δ effect). C_m accounts for the effect of the moment gradient. This interaction equation was part of all the subsequent editions of the AISC ASD Specifications from 1961 through 1998.

A new approach to the interaction of flexural and axial forces was introduced in the 1986 AISC *Load and Resistance Factor Design Specification for Structural Steel Buildings* (AISC, 1986). The following is an explanation of the thinking behind the interaction curves used. The equations

$$\frac{P}{P_y}+\frac{8}{9}\frac{M_{pc}}{M_p}=1 \quad \text{for } \frac{P}{P_y}\geq 0.2 \tag{C-H1-2a}$$

$$\frac{P}{2P_y}+\frac{M_{pc}}{M_p}=1 \quad \text{for } \frac{P}{P_y}< 0.2 \tag{C-H1-2b}$$

define the lower-bound curve for the interaction of the nondimensional axial strength, P/P_y, and flexural strength, M_{pc}/M_p, for compact wide-flange *stub-columns* bent about their x-axis. The cross section is assumed to be fully yielded in tension and compression. The symbol M_{pc} is the plastic moment strength of the cross section in the presence of an axial force, P. The curve representing Equations C-H1-2 almost overlaps the analytically exact curve for the major-axis bending of a W8×31 cross section (see Figure C-H1.1). The equations for the exact yield capacity of a wide-flange shape are (ASCE, 1971):

For $0 \leq \frac{P}{P_y} \leq \frac{t_w\left(d-2t_f\right)}{A}$

$$\frac{M_{pc}}{M_p}=1-\frac{A^2\left(\frac{P}{P_y}\right)^2}{4t_wZ_x} \tag{C-H1-3a}$$

For $\frac{t_w\left(d-2t_f\right)}{A} < \frac{P}{P_y} \leq 1$

$$\frac{M_{pc}}{M_p}=\frac{A\left(1-\frac{P}{P_y}\right)}{2Z_x}\left[d-\frac{A\left(1-\frac{P}{P_y}\right)}{2b_f}\right] \tag{C-H1-3b}$$

The equation approximating the average yield strength of wide-flange shapes is

$$\frac{M_{pc}}{M_p} = 1.18\left(1-\frac{P}{P_y}\right) \le 1 \qquad \text{(C-H1-4)}$$

The curves in Figure C-H1.2 show the exact and approximate yield interaction curves for wide-flange shapes bent about the *y*-axis, and the exact curves for the solid

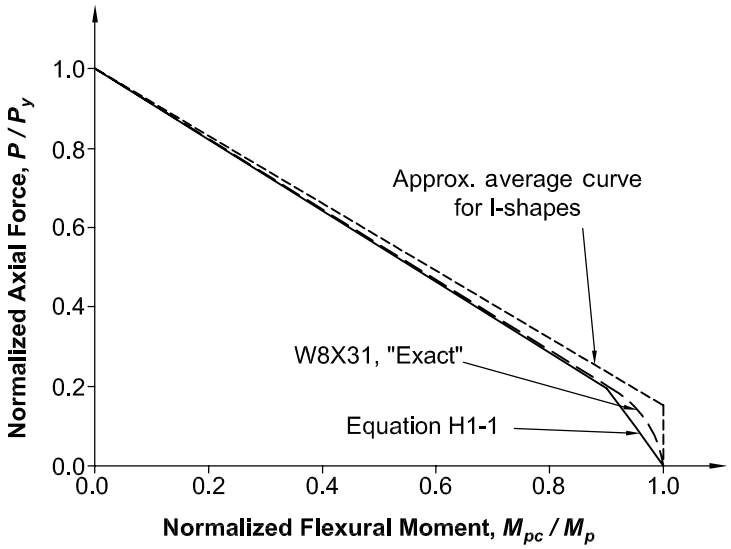

Fig. C-H1.1. Stub-column interaction curves: plastic moment versus axial force for wide-flange shapes, major-axis flexure [W8×31, F_y = 50 ksi (345 MPa)].

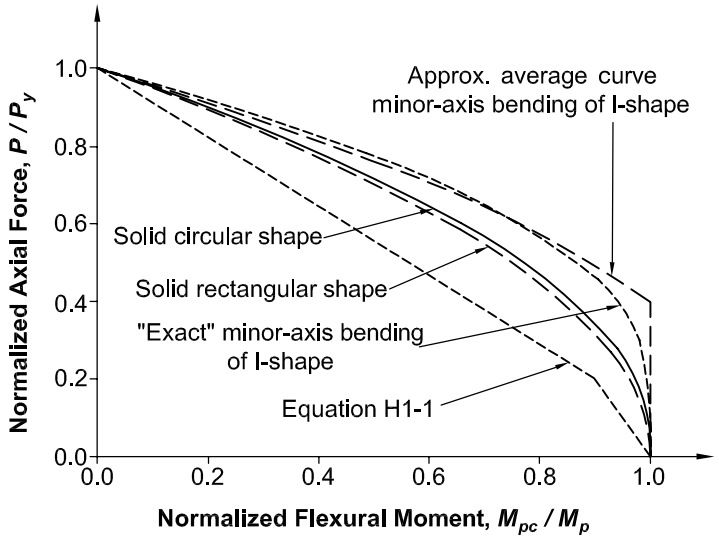

Fig. C-H1.2. Stub-column interaction curves: plastic moment versus axial force for solid round and rectangular sections and for wide-flange shapes, minor-axis flexure.

rectangular and round shapes. It is evident that the lower-bound AISC interaction curves are very conservative for these shapes.

The idea of portraying the strength of stub beam-columns was extended to actual beam-columns with actual lengths by normalizing the required flexural strength, M_u, of the beam by the nominal strength of a beam without axial force, M_n, and the required axial strength, P_u, by the nominal strength of a column without bending moment, P_n. This rearrangement results in a translation and rotation of the original stub-column interaction curve, as seen in Figure C-H1.3.

The normalized equations corresponding to the beam-column with length effects included are shown as Equation C-H1-5:

$$\frac{P_u}{P_n}+\frac{8}{9}\frac{M_u}{M_n}=1 \quad \text{for } \frac{P_u}{P_n}\geq 0.2 \tag{C-H1-5a}$$

$$\frac{P_u}{2P_n}+\frac{M_u}{M_n}=1 \quad \text{for } \frac{P_u}{P_n}< 0.2 \tag{C-H1-5b}$$

The interaction equations are designed to be very versatile. The terms in the denominator fix the endpoints of the interaction curve. The nominal flexural strength, M_n, is determined by the appropriate provisions from Chapter F. It encompasses the limit states of yielding, lateral-torsional buckling, flange local buckling, and web local buckling.

The axial term, P_n, is governed by the provisions of Chapter E, and it can accommodate nonslender or slender element columns, as well as the limit states of major and minor axis buckling, and torsional and flexural-torsional buckling. Furthermore, P_n is calculated for the applicable effective length of the column to take care of frame

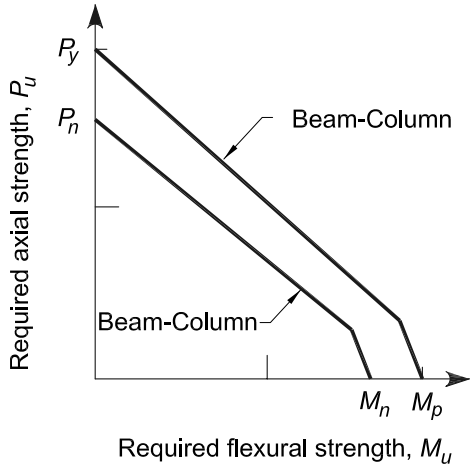

Fig. C-H1.3. Interaction curve for stub beam-column and beam-column.

stability effects, if the procedures of Appendix 7, Section 7.2 are used to determine the required moments and axial forces. These moments and axial forces include the amplification due to second-order effects.

The utility of the interaction equations is further enhanced by the fact that they also permit the consideration of *biaxial bending*.

2. Doubly and Singly Symmetric Members Subject to Flexure and Tension

Section H1.1 considers the most frequently occurring cases in design: members under flexure and axial compression. Section H1.2 addresses the less frequent cases of flexure and axial tension. Since axial tension increases the bending stiffness of the member to some extent, Section H1.2 permits the increase of C_b in Chapter F. Thus, when the bending term is controlled by lateral-torsional buckling, the moment gradient factor, C_b, is increased by $\sqrt{1+\frac{\alpha P_r}{P_{ey}}}$. For the 2010 Specification, this multiplier was altered slightly as shown here to use the same constant, α, as is used throughout the Specification when results at the ultimate strength level are required.

3. Doubly Symmetric Rolled Compact Members Subject to Single Axis Flexure and Compression

For doubly symmetric wide-flange sections with moment applied about the *x*-axis, the bilinear interaction Equation C-H1-5 is conservative for cases where the axial limit state is out-of-plane buckling and the flexural limit state is lateral-torsional buckling (Ziemian, 2010). Section H1.3 gives an optional equation for checking the out-of-plane resistance of such beam-columns.

The two curves labeled Equation H1-1 (out-of-plane) and Equation H1-2 (out-of-plane) in Figure C-H1.4 illustrate the difference between the bilinear and the parabolic interaction equations for out-of-plane resistance for the case of a W27×84 beam-column, $L_b = 10$ ft (3.05 m) and $F_y = 50$ ksi (345 MPa), subjected to a linearly varying strong axis moment with zero moment at one end and maximum moment at the other end ($C_b = 1.67$). In addition, the solid line in the figure shows the in-plane bilinear strength interaction for this member obtained from Equation H1-1. Note that the resistance term $C_b M_{cx}$ may be larger than $\phi_b M_p$ in LRFD and M_p/Ω_b in ASD. The smaller ordinate from the out-of-plane and in-plane resistance curves is the controlling strength.

Equation H1-2 is developed from the following fundamental form for the out-of-plane lateral-torsional buckling strength of doubly-symmetric I-section members, in LRFD:

$$\left(\frac{M_u}{C_b\phi_b M_{nx(C_b=1)}}\right)^2 \le \left(1-\frac{P_u}{\phi_c P_{ny}}\right)\left(1-\frac{P_u}{\phi_c P_{ez}}\right) \qquad \text{(C-H1-6)}$$

Equation H1-2 is obtained by substituting a lower-bound of 2.0 for the ratio of the elastic torsional buckling resistance to the out-of-plane nominal flexural buckling resistance, P_{ez}/P_{ny}, for W-shape members with $KL_y = KL_z$. The 2005 Specification assumed an upper bound, $P_{ez}/P_{ny} = \infty$, in Equation C-H1-6 in the development of Equation H1-2 which leads to some cases where the out-of-plane strength is overestimated. In addition, the fact that the nominal out-of-plane flexural resistance term, $C_b M_{nx(C_b = 1)}$, may be larger than M_p was not apparent in the 2005 Specification.

The relationship between Equations H1-1 and H1-2 is further illustrated in Figures C-H1.5 (for LRFD) and C-H1.6 (for ASD). The curves relate the required axial force, P (ordinate), and the required bending moment, M (abscissa), when the interaction Equations H1-1 and H1-2 are equal to unity. The positive values of P are compression and the negative values are tension. The curves are for a 10 ft (3 m) long W16×26 [F_y = 50 ksi (345 MPa)] member subjected to uniform strong axis bending, $C_b = 1$. The solid curve is for in-plane behavior, that is, lateral bracing prevents lateral-torsional buckling. The dotted curve represents Equation H1-1 for the case when there are no lateral braces between the ends of the beam-column. In the

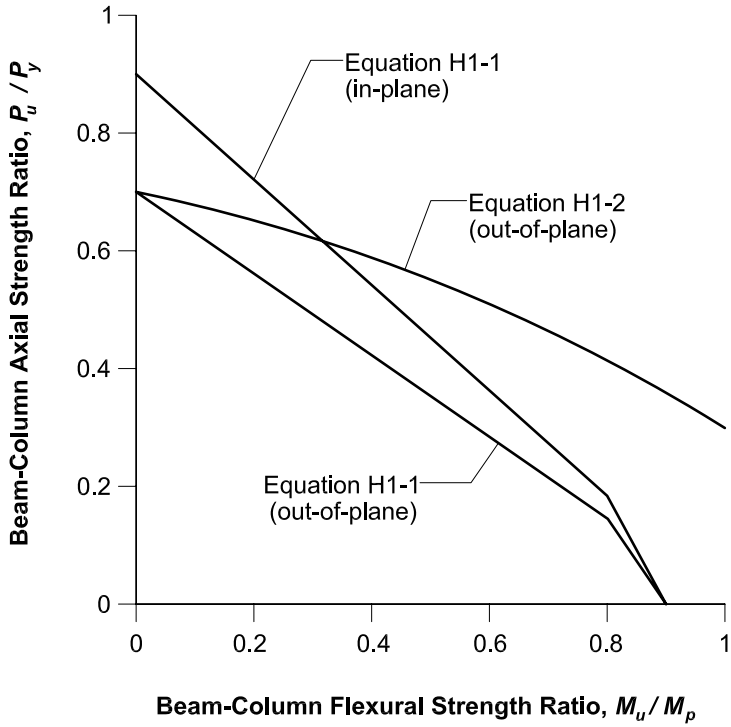

Fig. C-H1.4. Comparison between bilinear (Equation H1-1) and parabolic (Equation H1-2) out-of-plane strength interaction equations and bilinear (Equation H1-1) in-plane strength interaction equation (W27×84, F_y = 50 ksi, L_b = 10 ft, C_b =1.75).

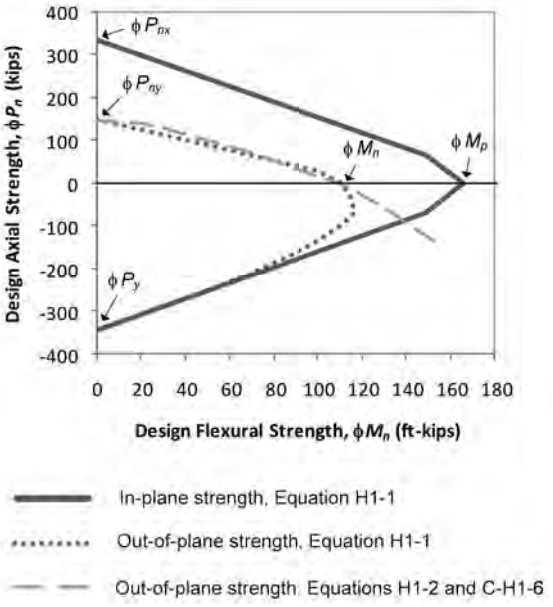

Fig. C-H1.5. Beam-columns under compressive and tensile axial force (tension is shown as negative) (LRFD) (W16×26, F_y = 50 ksi, L_b = 10 ft, C_b = 1).

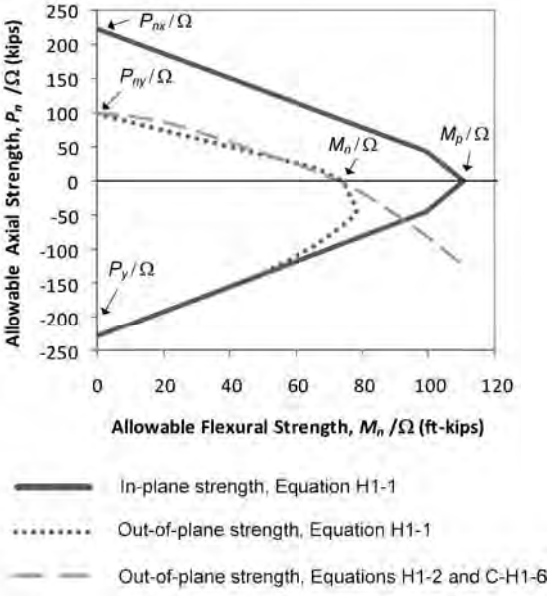

Fig. C-H1.6. Beam-columns under compressive and tensile axial force (tension is shown as negative) (ASD) (W16×26, F_y = 50 ksi, L_b = 10 ft, C_b = 1).

region of the tensile axial force, the curve is modified by the term $\sqrt{1+\frac{\alpha P_r}{P_{ey}}}$, as permitted in Section H1.2. The dashed curve is Equation H1-2 for the case of axial compression, and it is taken as the lower-bound determined using Equation C-H1-6 with P_{ez}/P_{ny} taken equal to infinity for the case of axial tension. For a given compressive or tensile axial force, Equations H1-2 and C-H1-6 allow a larger bending moment over most of their applicable range.

H2. UNSYMMETRIC AND OTHER MEMBERS SUBJECT TO FLEXURE AND AXIAL FORCE

The provisions of Section H1 apply to beam-columns with cross sections that are either doubly or singly symmetric. However, there are many cross sections that are unsymmetrical, such as unequal leg angles and any number of possible fabricated sections. For these situations, the interaction equations of Section H1 may not be appropriate. The linear interaction $\left|\frac{f_{ra}}{F_{ca}}+\frac{f_{rbw}}{F_{cbw}}+\frac{f_{rbz}}{F_{cbz}}\right|\le 1.0$ provides a conservative and simple way to deal with such problems. The lower case stresses, f, are the required axial and flexural stresses computed by elastic analysis for the applicable loads, including second-order effects where appropriate, and the upper case stresses, F, are the available stresses corresponding to the limit state of yielding or buckling. The subscripts r and c refer to the required and available stresses respectively while the subscripts w and z refer to the principal axes of the unsymmetric cross section. This Specification leaves the option to the designer to use the Section H2 interaction equation for cross sections that would qualify for the more liberal interaction equation of Section H1.

The interaction equation, Equation H2-1, applies equally to the case where the axial force is in tension. Equation H2-1 was written in stress format as an aid in examining the condition at the various critical locations of the unsymmetric member. For unsymmetrical sections with uniaxial or biaxial flexure, the critical condition is dependent on the resultant direction of the moment. This is also true for singly symmetric members such as for x-axis flexure of tees. The same elastic section properties are used to compute the corresponding required and available flexural stress terms which means that the moment ratio will be the same as the stress ratio.

There are two approaches for using Equation H2-1:

(a) Strictly using Equation H2-1 for the interaction of the critical moment about each principal axis, there is only one flexural stress ratio term for every critical location since moment and stress ratios are the same as noted above. In this case one would algebraically add the value of each of the ratio terms to obtain the critical condition at one of the extreme fibers.

Using Equation H2-1 is the conservative approach and is recommended for examining members such as single angles. The available flexural stresses at a particular location (tip of short or long leg or at the heel) are based on the yielding limit moment, the local buckling limit moment, or the lateral-torsional

buckling moment consistent with the sign of the required flexural stress. In each case the yield moment should be based on the smallest section modulus about the axis being considered. One would check the stress condition at the tip of the long and short legs and at the heel and find that at one of the locations the stress ratios would be critical.

(b) For certain load components, where the critical stress can transition from tension at one point on the cross section to compression at another, it may be advantageous to consider two interaction relationships depending on the magnitude of each component. This is permitted by the sentence at the end of Section H2 which permits a more detailed analysis in lieu of Equation H2-1 for the interaction of flexure and tension.

As an example, for a tee with flexure about both the *x* and *y*-axes creating tension at the tip of the stem, compression at the flange could control or tension at the stem could control the design. If *y*-axis flexure is large relative to *x*-axis flexure, the stress ratio need only be checked for compression at the flange using corresponding design compression stress limits. However, if the *y*-axis flexure is small relative to the *x*-axis flexure, then one would check the tensile stress condition at the tip of the stem, this limit being independent of the amount of the *y*-axis flexure. The two differing interaction expressions are

$$\left|\frac{f_{ra}}{F_{ca}}+\frac{f_{rby}}{F_{cby}}+\frac{f_{rbx}}{F_{cbx}}\right|\le 1.0 \text{ at tee flange}$$

and

$$\left|\frac{f_{ra}}{F_{ca}}+\frac{f_{rbx}}{F_{cbx}}\right|\le 1.0 \text{ at tee stem}$$

The interaction diagrams for biaxial flexure of a WT using both approaches are illustrated in Figure C-H2.1.

Another situation in which one could benefit from consideration of more than one interaction relationship occurs when axial tension is combined with a flexural compression limit based on local buckling or lateral-torsional buckling. An example of this is when the stem of a tee in flexural compression is combined with axial tension. The introduction of the axial tension will reduce the compression which imposed the buckling stress limit. With a required large axial tension and a relatively small flexural compression, the design flexural stress could be set at the yield limit at the stem.

$$\left|\frac{f_{ra}}{F_{ca}}+\frac{f_{rbx}}{F_{cbx}}\right|\le 1.0$$

where F_{cbx} is the flange tension stress based on reaching ϕF_y in the stem. There could be justification for using F_{cbx} equal to ϕF_y in this expression.

This interaction relationship would hold until the interaction between the flexural compression stress at the stem with F_{cbx} based on local or lateral-torsional buckling limit as increased by the axial tension would control.

$$\left|\frac{f_{ra}}{F_{ca}} - \frac{f_{rbx}}{F_{cbx}}\right| \le 1.0$$

The interaction diagrams for this case, using both approaches, are illustrated in Figure C-H2.2.

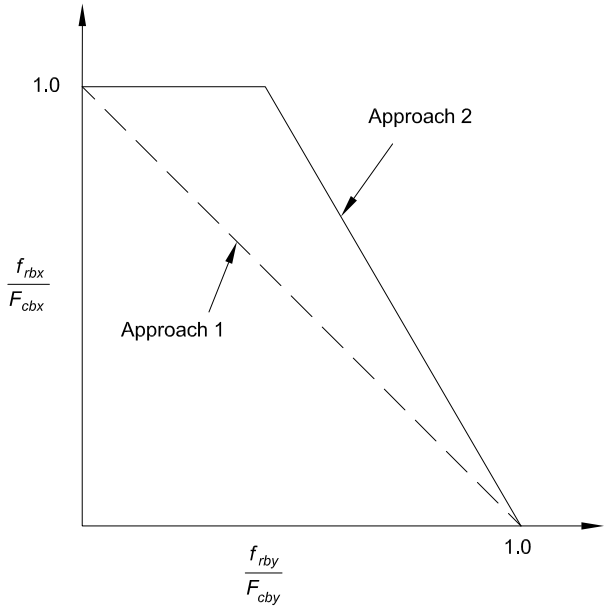

Fig. C-H2.1. WT with biaxial flexure.

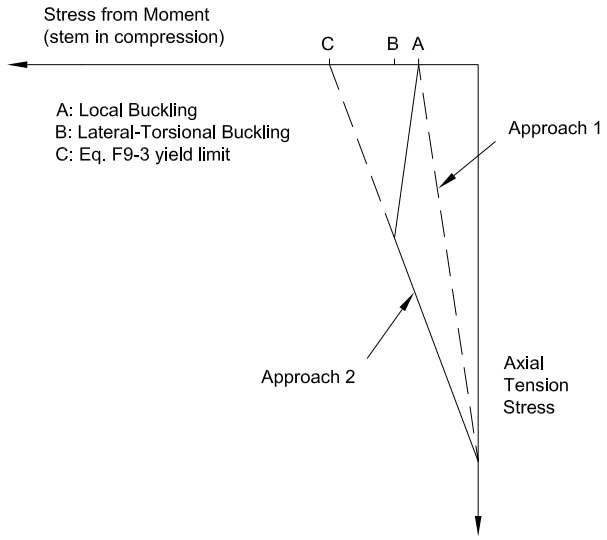

Fig. C-H2.2. WT with flexural compression on the stem plus axial tension.

H3. MEMBERS SUBJECT TO TORSION AND COMBINED TORSION, FLEXURE, SHEAR AND/OR AXIAL FORCE

Section H3 provides provisions for cases not covered in the previous two sections. The first two parts of this section address the design of HSS members, and the third part is a general provision directed to cases where the designer encounters torsion in addition to normal stresses and shear stresses.

1. Round and Rectangular HSS Subject to Torsion

Hollow structural sections (HSS) are frequently used in space-frame construction and in other situations wherein significant torsional moments must be resisted by the members. Because of its closed cross section, an HSS is far more efficient in resisting torsion than an open cross section such as a W-shape or a channel. While normal and shear stresses due to restrained warping are usually significant in shapes of open cross section, they are insignificant in closed cross sections. The total torsional moment can be assumed to be resisted by pure torsional shear stresses. These are often referred in the literature as *St. Venant torsional* stresses.

The pure torsional shear stress in HSS sections is assumed to be uniformly distributed along the wall of the cross section, and it is equal to the torsional moment, T_u, divided by a torsional shear constant for the cross section, C. In a limit state format, the nominal torsional resisting moment is the shear constant times the critical shear stress, F_{cr}.

For round HSS, the torsional shear constant is equal to the polar moment of inertia divided by the radius,

$$C = \frac{\pi\left(D^4 - D_i^4\right)}{32D/2} \approx \frac{\pi t(D-t)^2}{2} \qquad \text{(C-H3-1)}$$

where D_i is the inside diameter.

For rectangular HSS, the torsional shear constant is obtained as $2tA_o$ using the membrane analogy (Timoshenko, 1956), where A_o is the area bounded by the midline of the section. Conservatively assuming an outside corner radius of $2t$, the midline radius is $1.5t$ and

$$A_o = (B-t)(H-t) - 9t^2\frac{(4-\pi)}{4} \qquad \text{(C-H3-2)}$$

resulting in

$$C = 2t(B-t)(H-t) - 4.5t^3(4-\pi) \qquad \text{(C-H3-3)}$$

The resistance factor, ϕ, and the safety factor, Ω, are the same as for flexural shear in Chapter G.

When considering local buckling in round HSS subjected to torsion, most structural members will either be long or of moderate length and the provisions for short

cylinders will not apply. The elastic local buckling strength of long cylinders is unaffected by end conditions and the critical stress is given in Ziemian (2010) as

$$F_{cr} = \frac{K_t E}{\left(\frac{D}{t}\right)^{\frac{3}{2}}} \tag{C-H3-4}$$

The theoretical value of K_t is 0.73 but a value of 0.6 is recommended to account for initial imperfections. An equation for the elastic local buckling stress for round HSS of moderate length ($L > 5.1D^2/t$) where the edges are not fixed at the ends against rotation is given in Schilling (1965) and Ziemian (2010) as

$$F_{cr} = \frac{1.23E}{\left(\frac{D}{t}\right)^{\frac{5}{4}}\sqrt{\frac{L}{D}}} \tag{C-H3-5}$$

This equation includes a 15% reduction to account for initial imperfections. The length effect is included in this equation for simple end conditions, and the approximately 10% increase in buckling strength is neglected for edges fixed at the end. A limitation is provided so that the shear yield strength, $0.6F_y$, is not exceeded.

The critical stress provisions for rectangular HSS are identical to the flexural shear provisions of Section G2 with the shear buckling coefficient equal to $k_v = 5.0$. The shear distribution due to torsion is uniform in the longest sides of a rectangular HSS, and this is the same distribution that is assumed to exist in the web of a W-shape beam. Therefore, it is reasonable that the provisions for buckling are the same in both cases.

2. HSS Subject to Combined Torsion, Shear, Flexure and Axial Force

Several interaction equation forms have been proposed in the literature for load combinations that produce both normal and shear stresses. In one common form, the normal and shear stresses are combined elliptically with the sum of the squares (Felton and Dobbs, 1967):

$$\left(\frac{f}{F_{cr}}\right)^2 + \left(\frac{f_v}{F_{vcr}}\right)^2 \le 1 \tag{C-H3-6}$$

In a second form, the first power of the ratio of the normal stresses is used:

$$\left(\frac{f}{F_{cr}}\right) + \left(\frac{f_v}{F_{vcr}}\right)^2 \le 1 \tag{C-H3-7}$$

The latter form is somewhat more conservative, but not overly so (Schilling, 1965), and this is the form used in this Specification:

$$\left(\frac{P_r}{P_c} + \frac{M_r}{M_c}\right) + \left(\frac{V_r}{V_c} + \frac{T_r}{T_c}\right)^2 \le 1.0 \tag{C-H3-8}$$

where the terms with the subscript r represent the required strengths, and the ones with the subscript c are the corresponding available strengths. Normal effects due to flexural and axial load effects are combined linearly and then combined with the square of the linear combination of flexural and torsional shear effects. When an axial compressive load effect is present, the required flexural strength, M_c, is to be determined by second-order analysis. When normal effects due to flexural and axial load effects are not present, the square of the linear combination of flexural and torsional shear effects underestimates the actual interaction. A more accurate measure is obtained without squaring this combination.

3. Non-HSS Members Subject to Torsion and Combined Stress

This section covers all the cases not previously covered. Examples are built-up unsymmetric crane girders and many other types of odd-shaped built-up cross sections. The required stresses are determined by elastic stress analysis based on established theories of structural mechanics. The three limit states to consider and the corresponding available stresses are:

1. Yielding under normal stress—F_y
2. Yielding under shear stress—$0.6F_y$
3. Buckling—F_{cr}

In most cases it is sufficient to consider normal stresses and shear stresses separately because maximum values rarely occur in the same place in the cross section or at the same place in the span. AISC Design Guide 9, *Torsional Analysis of Structural Steel Members* (Seaburg and Carter, 1997), provides a complete discussion on torsional analysis of open shapes.

H4. RUPTURE OF FLANGES WITH HOLES SUBJECT TO TENSION

Equation H4-1 is provided to evaluate the limit state of tensile rupture of the flanges of beam-columns. This provision is only applicable in cases where there are one or more holes in the flange in net tension under the combined effect of flexure and axial forces. When both the axial and flexural stresses are tensile, their effects are additive. When the stresses are of opposite sign, the tensile effect is reduced by the compression effect.

CHAPTER I
DESIGN OF COMPOSITE MEMBERS

Chapter I includes the following major changes and additions in this edition of the Specification:

1. Concrete and Steel Reinforcement Detailing (Sections I1, I2 and I8): References to ACI 318 (ACI, 2008) are made in Sections I1.1 and I2.1 to invoke requirements for concrete and steel reinforcement requirements. References to ACI 318 are also made in Section I8.3 to invoke requirements for concrete strength of steel headed stud anchors.
2. Local Buckling Provisions (Section I1.2 and I1.4): New provisions are added for local buckling in Sections I1.2 and I1.4. These requirements also lead to new provisions for axial compression and flexural design of filled composite members that are compact, noncompact and slender as addressed in Sections I2.2 and I3.4.
3. Minimum Axial Strength for Composite Compression Members (Sections I2.1 and I2.2): These sections specify that the axial strength of an encased composite compression member and a filled composite compression member need not be less than the strength of a bare steel compression member according to the provisions of Chapter E using the same steel section as the composite member.
4. Load Transfer in Composite Members (Sections I3 and I6): New material is added and revisions are made to the load transfer requirements in composite components. The expanded scope of this section has warranted the creation of a new dedicated section for load transfer in composite members.
5. Reliability of Strength for Encased and Filled Composite Beams (Sections I3.3 and I3.4): The resistance factor and safety factor for encased and filled composite beams were adjusted based upon assessment of new data.
6. Design for Shear (Section I4): All provisions for shear design of composite members are consolidated in a new Section I4.
7. Design of Composite Beam-Columns (Section I5): Clarification of composite beam-column design methods is covered in Section I5.
8. Diaphragms and Collector Beams (Section I7): Performance language has been added in a new Section I7 that covers the design and detailing of composite diaphragms and collector beams. Supplemental information is provided in the Commentary as guidance to designers.
9. Steel Anchors (Section I8): New provisions covering the design of steel anchors (both headed studs and hot rolled channels) are included in Section I8. Provisions for composite beams with slabs remain essentially unchanged except for edits that were made for consistency with the new provisions. Provisions are added in Section I8.2 for edge distances of stud anchors along the axis of a composite beam for normal and lightweight concrete. New steel anchor provisions for shear, tension, and interaction of shear and tension are also provided for other forms of composite construction. These changes propose new terminology to be consistent with the more general provisions on anchorage in ACI 318 Appendix D (ACI, 2008). Specifically, the term “shear

connector" is replaced by the generic term "steel anchor." Steel anchors in the Specification can refer either to steel "headed stud anchors" or hot-rolled steel "channel anchors."

I1. GENERAL PROVISIONS

Design of composite sections requires consideration of both steel and concrete behavior. These provisions were developed with the intent both to minimize conflicts between current steel and concrete design and detailing provisions and to give proper recognition to the advantages of composite design.

As a result of the attempt to minimize design conflicts, this Specification uses a cross-sectional strength approach for compression member design consistent with that used in reinforced concrete design (ACI, 2008). This approach, in addition, results in a consistent treatment of cross-sectional strengths for both composite columns and beams.

The provisions in Chapter I address strength design of the composite sections only. The designer needs to consider the loads resisted by the steel section alone when determining load effects during the construction phase. The designer also needs to consider deformations throughout the life of the structure and the appropriate cross section for those deformations. When considering these latter limit states, due allowance should be made for the additional long-term changes in stresses and deformations due to creep and shrinkage of the concrete.

1. Concrete and Steel Reinforcement

Reference is made to ACI 318 (ACI, 2008) for provisions related to the concrete and reinforcing steel portion of composite design and detailing, such as anchorage and splice lengths, intermediate column ties, reinforcing spirals, and shear and torsion provisions.

Exceptions and limitations are provided as follows:

(1) The composite design procedures of ACI 318 have remained unchanged for many years. It was therefore decided to exclude the composite design sections of ACI 318 to take advantage of recent research (Ziemian, 2010; Hajjar, 2000; Shanmugam and Lakshmi, 2001; Leon et al., 2007; Varma and Zhang, 2009; Jacobs and Goverdhan, 2010) into composite behavior that is reflected in the Specification.
(2) Concrete limitations in addition to those given in ACI 318 are provided to reflect the applicable range of test data on composite members. See also Commentary Section I1.3.
(3) ACI provisions for tie reinforcing of noncomposite reinforced concrete compression members shall be followed in addition to the provisions specified in Section I2.1a(2). See also Commentary Section I2.1a(2).
(4) The limitation of $0.01A_g$ in ACI 318 for the minimum longitudinal reinforcing ratio of reinforced concrete compression members is based upon the phenomena of stress transfer under service load levels from the concrete to the reinforcement due to creep and shrinkage. The inclusion of an encased structural steel section

meeting the requirements of Section I2.1a aids in mitigating this effect and consequently allows a reduction in minimum longitudinal reinforcing requirements. See also Commentary Section I2.1a(3).

The design basis for ACI 318 is strength design. Designers using allowable stress design for steel design must be conscious of the different load factors between the two specifications.

2. Nominal Strength of Composite Sections

The strength of composite sections shall be computed based on either of the two approaches presented in this Specification. One is the strain compatibility approach, which provides a general calculation method. The other is the plastic stress distribution approach, which is a subset of the strain compatibility approach. The plastic stress distribution method provides a simple and convenient calculation method for the most common design situations, and is thus treated first. Limited use of the elastic stress distribution method is retained for calculation of composite beams with noncompact webs.

2a. Plastic Stress Distribution Method

The plastic stress distribution method is based on the assumption of linear strain across the cross section and elasto-plastic behavior. It assumes that the concrete has reached its crushing strength in compression at a strain of 0.003 and a corresponding stress (typically $0.85f'_c$) on a rectangular stress block, and that the steel has exceeded its yield strain, taken as F_y/E_s.

Based on these simple assumptions, the cross-sectional strength for different combinations of axial force and bending moment may be approximated for typical composite compression member cross sections. The actual interaction diagram for moment and axial force for a composite section based on a plastic stress distribution is similar to that of a reinforced concrete section as shown in Figure C-I1.1. As a simplification, for concrete-encased sections a conservative linear interaction between

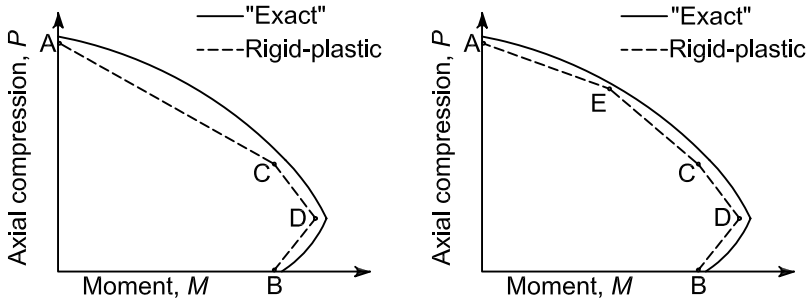

(a) Strong axis *(b) Weak axis*

Fig. C-I1.1. Comparison between exact and simplified moment-axial compressive force envelopes.

four or five anchor points, depending on axis of bending, can be used (Roik and Bergmann, 1992; Ziemian, 2010). These points are identified as A, B, C, D and E in Figure C-I1.1.

The plastic stress approach for compression members assumes that no slip has occurred between the steel and concrete portions and that the required width-to-thickness ratios prevent local buckling from occurring until some yielding and concrete crushing have taken place. Tests and analyses have shown that these are reasonable assumptions for both concrete-encased steel sections with steel anchors and for HSS sections that comply with these provisions (Ziemian, 2010; Hajjar, 2000; Shanmugam and Lakshmi, 2001; Varma et al. 2002; Leon et al., 2007). For round HSS, these provisions allow for the increase of the usable concrete stress to $0.95f_c'$ for calculating both axial compressive and flexural strengths to account for the beneficial effects of the restraining hoop action arising from transverse confinement (Leon et al., 2007).

Based on similar assumptions, but allowing for slip between the steel beam and the composite slab, simplified expressions can also be derived for typical composite beam sections. Strictly speaking, these distributions are not based on slip, but on the strength of the shear connection. Full interaction is assumed if the shear connection strength exceeds that of either (a) the tensile yield strength of the steel section or the compressive strength of the concrete slab when the composite beam is loaded in positive moment, or (b) the tensile yield strength of the longitudinal reinforcing bars in the slab or the compressive strength of the steel section when loaded in negative moment. When steel anchors are provided in sufficient numbers to fully develop this flexural strength, any slip that occurs prior to yielding has a negligible affect on behavior. When full interaction is not present, the beam is said to be partially composite. The effects of slip on the elastic properties of a partially composite beam can be significant and should be accounted for, if significant, in calculations of deflections and stresses at service loads. Approximate elastic properties of partially composite beams are given in Commentary Section I3.

2b. Strain Compatibility Method

The principles used to calculate cross-sectional strength in Section I1.2a may not be applicable to all design situations or possible cross sections. As an alternative, Section I1.2b permits the use of a generalized strain-compatibility approach that allows the use of any reasonable strain-stress model for the steel and concrete.

3. Material Limitations

The material limitations given in Section I1.3 reflect the range of material properties available from experimental testing (Ziemian, 2010; Hajjar, 2000; Shanmugam and Lakshmi, 2001; Varma et al., 2002; Leon et al., 2007). As for reinforced concrete design, a limit of 10 ksi (70 MPa) is imposed for strength calculations, both to reflect the scant data available above this strength and the changes in behavior observed (Varma et al., 2002). A lower limit of 3 ksi (21 MPa) is specified for both normal and lightweight concrete and an upper limit of 6 ksi (42 MPa) is specified for lightweight concrete to encourage the use of good quality, yet readily available, grades of struc-

tural concrete. The use of higher strengths in computing the modulus of elasticity is permitted, and the limits given can be extended for strength calculations if appropriate testing and analyses are carried out.

4. Classification of Filled Composite Sections for Local Buckling

The behavior of filled composite members is fundamentally different from the behavior of hollow steel members. The concrete infill has a significant influence on the stiffness, strength and ductility of composite members. As the steel section area decreases, the concrete contribution becomes even more significant.

The elastic local buckling of the steel tube is influenced significantly by the presence of the concrete infill. The concrete infill changes the buckling mode of the steel tube (both within the cross section and along the length of the member) by preventing it from deforming inwards. For example, see Figures C-I1.2 and C-I1.3. Bradford et al. (1998) analyzed the elastic local buckling behavior of filled composite compression members, showing that for rectangular steel tubes, the plate buckling coefficient (i.e., *k*-factor) in the elastic plate buckling equation (Ziemian,

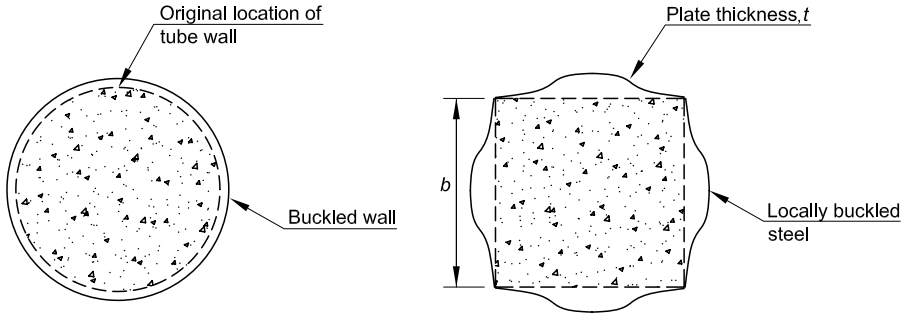

Fig. C-I1.2. Change in cross-sectional buckling mode due to concrete infill.

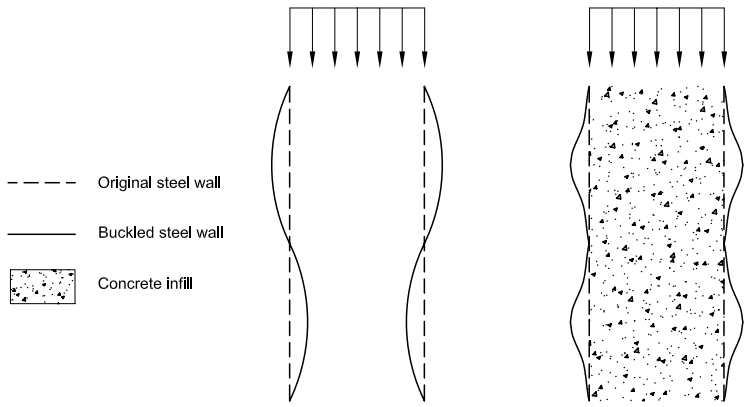

Fig. C-I1.3. Changes in buckling mode with length due to the presence of infill.

2010) changes from 4.00 (for hollow tubes) to 10.6 (for filled sections). As a result, the elastic plate buckling stress increases by a factor of 2.65 for filled sections as compared to hollow structural sections. Similarly, Bradford et al. (2002) showed that the elastic local buckling stress for filled round sections is 1.73 times that for hollow round sections.

For rectangular filled sections, the elastic local buckling stress, F_{cr}, from the plate buckling equation simplifies to Equation I2-10. This equation indicates that yielding will occur for plates with *b/t* less than or equal to $3.00\sqrt{E_s / F_y}$, which designates the limit between noncompact and slender sections, λ_r. This limit does not account for the effects of *residual stresses* or geometric imperfections because the concrete contribution governs for these larger *b/t* ratios and the effects of reducing steel stresses is small. The maximum permitted *b/t* value for λ_p is based on the lack of experimental data above the limit of $5.00\sqrt{E_s / F_y}$, and the potential effects (plate deflections and locked-in stresses) of concrete placement in extremely slender filled HSS cross sections. For flexure, the *b/t* limits for the flanges are the same as those for walls in axial compression due to the similarities in loading and behavior. The compact/noncompact limit, λ_p, for webs in flexure was established conservatively as $3.00\sqrt{E_s / F_y}$. The noncompact/slender limit, λ_r, for the web was established conservatively as $5.70\sqrt{E_s / F_y}$, which is also the maximum permitted for hollow structural sections. This was also established as the maximum permitted value due to the lack of experimental data and concrete placement concerns for thinner filled HSS cross sections (Varma and Zhang, 2009).

For round filled sections in axial compression, the noncompact/slender limit, λ_r, was established as $0.19E/F_y$, which is 1.73 times the limit ($0.11E/F_y$) for hollow round sections. This was based on the findings of Bradford et al. (2002) mentioned earlier, and it compares well with experimental data. The maximum permitted *D/t* equal to $0.31E/F_y$ is based on the lack of experimental data and the potential effects of concrete placement in extremely slender filled HSS cross sections. For round filled sections in flexure, the compact/noncompact limit, λ_p, in Table I1.1b was developed conservatively as 1.25 times the limit ($0.07E/F_y$) for round hollow structural sections. The noncompact/slender limit, λ_r, was assumed conservatively to be the same for round hollow structural sections ($0.31E/F_y$). This was also established as the maximum permitted value due to lack of experimental data and concrete placement concerns for thinner filled HSS cross sections (Varma and Zhang, 2009).

I2. AXIAL FORCE

In Section I2, the design of concrete-encased and concrete-filled composite members is treated separately, although they have much in common. The intent is to facilitate design by keeping the general principles and detailing requirements for each type of compression member separate.

An ultimate strength cross section model is used to determine the section strength (Leon et al., 2007; Leon and Hajjar, 2008). This model is similar to that used in previous LRFD Specifications. The major difference is that the full strength of the reinforcing steel and concrete are accounted for rather than the 70% that was used in those previous Specifications. In addition, these provisions give the strength of the

composite section as a force, while the previous approach had converted that force to an equivalent stress. Since the reinforcing steel and concrete had been arbitrarily discounted, the previous provisions did not accurately predict strength for compression members with a low percentage of steel.

The design for length effects is consistent with that for steel compression members. The equations used are the same as those in Chapter E, albeit in a different format, and as the percent of concrete in the section decreases, the design defaults to that of a steel section (although with different resistance and safety factors). Comparisons between the provisions in the Specification and experimental data show that the method is generally conservative but that the coefficient of variation obtained is large (Leon et al., 2007).

1. Encased Composite Members

1a. Limitations

(1) In this Specification, the use of composite compression members is applicable to a minimum steel ratio (area of steel shape divided by the gross area of the member) equal to or greater than 1%.
(2) The specified minimum quantity for transverse reinforcement is intended to provide good confinement to the concrete. It is the intent of the Specification that the transverse tie provisions of ACI 318 Chapter 7 be followed in addition to the limits provided.
(3) A minimum amount of longitudinal reinforcing steel is prescribed to ensure that unreinforced concrete encasements are not designed with these provisions. Continuous longitudinal bars should be placed at each corner of the cross section. Additional provisions for minimum number of longitudinal bars are provided in ACI 318 Section 10.9.2. Other longitudinal bars may be needed to provide the required restraint to the cross-ties, but that longitudinal steel cannot be counted towards the minimum area of longitudinal reinforcing nor the cross-sectional strength unless it is continuous and properly anchored.

1b. Compressive Strength

The compressive strength of the cross section is given as the sum of the ultimate strengths of the components. The strength is not capped as in reinforced concrete compression member design for a combination of the following reasons: (1) the resistance factor is 0.75 (lower than some older Specifications); (2) the required transverse steel provides better performance than a typical reinforced concrete compression member; (3) the presence of a steel section near the center of the section reduces the possibility of a sudden failure due to buckling of the longitudinal reinforcing steel; and (4) there will typically be moment present due to the manner in which stability is addressed in the Specification through the use of a minimum notional load and the size of the member and the typical force introduction mechanisms.

For application of encased composite members using the direct analysis method as defined in Chapter C, and pending the results of ongoing research on composite compression members, it is suggested that the reduced flexural stiffness EI^* be based on

the use of the $0.8\tau_b$ reduction applied to the EI_{eff} (from Equation I2-6) unless a more comprehensive study is undertaken. Alternatively, designers are referred to ACI 318 Chapter 10 for appropriate E_cI_g values to use with the $0.8\tau_b$ stiffness reduction in performing frame analysis using encased composite compression members whose stiffness may be evaluated in a similar way to conventional reinforced concrete compression members. Refer to Commentary Section I3.2 for recommendations on appropriate stiffness for composite beams.

1c. Tensile Strength

Section I2.1c clarifies the tensile strength to be used in situations where uplift is a concern and for computations related to beam-column interaction. The provision focuses on the limit state of yield on gross area. Where appropriate for the structural configuration, consideration should also be given to other tensile strength and connection strength limit states as specified in Chapters D and J.

2. Filled Composite Members

2a. Limitations

(1) As discussed for encased compression members, it is permissible to design filled composite compression members with a steel ratio as low as 1%.
(2) Filled composite sections are classified as compact, noncompact or slender depending on the tube slenderness, *b/t* or *D/t*, and the limits in Table I1.1a.

2b. Compressive Strength

A compact hollow structural section (HSS) has sufficient thickness to develop yielding of the steel HSS in longitudinal compression, and to provide confinement to the concrete infill to develop its compressive strength (0.85 or $0.95f'_c$). A noncompact section has sufficient tube thickness to develop yielding of the steel tube in the longitudinal direction, but it cannot adequately confine the concrete infill after it reaches $0.70f'_c$ compressive stress in the concrete and starts undergoing significant inelasticity and volumetric dilation, thus pushing against the steel HSS. A slender section can neither develop yielding of the steel HSS in the longitudinal direction, nor confine the concrete after it reaches $0.70f'_c$ compressive stress in the concrete and starts undergoing inelastic strains and significant volumetric dilation pushing against the HSS (Varma and Zhang, 2009).

Figure C-I2.1 shows the variation of the nominal axial compressive strength, P_{no}, of the composite section with respect to the HSS slenderness. As shown, compact sections can develop the full plastic strength, P_p, in compression. The nominal axial strength, P_{no}, of noncompact sections can be determined using a quadratic interpolation between the plastic strength, P_p, and the yield strength, P_y, with respect to the tube slenderness. This interpolation is quadratic because the ability of the steel tube to confine the concrete infill undergoing inelasticity and volumetric dilation decreases rapidly with HSS slenderness. Slender sections are limited to developing the critical buckling stress, F_{cr}, of the steel HSS and $0.70f'_c$ of the concrete infill (Varma and Zhang, 2009).

The nominal axial strength, P_n, of composite compression members including length effects may be determined using Equations I2-2 and I2-3, while using EI_{eff} (from Equation I2-12) to account for composite section rigidity and P_{no} to account for the effects of local buckling as described above. This approach is slightly different than the one used for hollow structural sections found in Section E7, where the effective local buckling stress, f, for slender sections has an influence on the column buckling stress, F_{cr}, and vice versa. This approach was not implemented for filled compression members because: (i) their axial strength is governed significantly by the contribution of the concrete infill, (ii) concrete inelasticity occurs within the compression member failure segment irrespective of the buckling load, and (iii) the calculated nominal strengths compare conservatively with experimental results (Varma and Zhang, 2009).

For application of filled composite members in the direct analysis method as defined in Chapter C and pending the results of ongoing research on composite compression members, it is suggested that the reduced flexural stiffness, EI^*, be based on the use of the $0.8\tau_b$ reduction applied to the EI_{eff} from Equation I2-12 unless a more comprehensive study is undertaken.

2c. Tensile Strength

As for encased compression members, Section I2.2c specifies the tensile strength for filled composite members. Similarly, while the provision focuses on the limit state of yield on gross area, where appropriate, consideration should also be given to other tensile strength and connection strength limit states as specified in Chapters D and J.

I3. FLEXURE

1. General

Three types of composite flexural members are addressed in this section: fully encased steel beams, concrete-filled HSS, and steel beams with mechanical anchorage to a concrete slab which are generally referred to as composite beams.

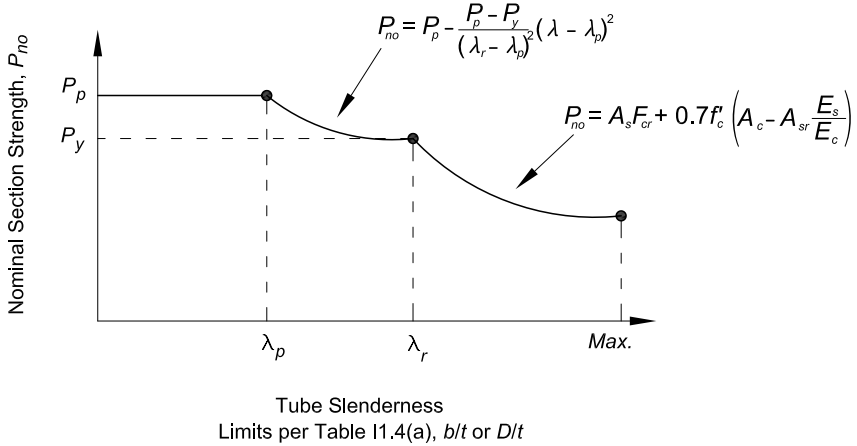

Fig. C-I2.1. Nominal axial strength, P_{no}*, vs. HSS slenderness.*

1a. Effective Width

The same effective width rules apply to composite beams with a slab on either one side or both sides of the beam. In cases where the *effective stiffness* of a beam with a one-sided slab is important, special care should be exercised since this model can substantially overestimate stiffness (Brosnan and Uang, 1995). To simplify design, the effective width is based on the full span, center-to-center of supports, for both simple and continuous beams.

1b. Strength During Construction

Composite beam design requires care in considering the loading history. Loads applied to an unshored beam before the concrete has cured are resisted by the steel section alone; total loads applied before and after the concrete has cured are considered to be resisted by the composite section. It is usually assumed for design purposes that concrete has hardened when it attains 75% of its design strength. Unshored beam deflection caused by fresh concrete tends to increase slab thickness and dead load. For longer spans this may lead to instability analogous to roof ponding. Excessive increase of slab thickness may be avoided by beam camber. Pouring the slab to a constant thickness will also help eliminate the possibility of ponding instability (Ruddy, 1986). When forms are not attached to the top flange, lateral bracing of the steel beam during construction may not be continuous and the unbraced length may control flexural strength, as defined in Chapter F.

This Specification does not include special requirements for strength during construction. For these noncomposite beams, the provisions of Chapter F apply.

Load combinations for construction loads should be determined for individual projects according to local conditions, using ASCE (2010) as a guide.

2. Composite Beams with Steel Headed Stud or Steel Channel Anchors

Section I3.2 applies to simple and continuous composite beams with steel anchors, constructed with or without temporary shores.

When a composite beam is controlled by deflection, the design should limit the behavior of the beam to the elastic range under serviceability load combinations. Alternatively, the amplification effects of inelastic behavior should be considered when deflection is checked.

It is often not practical to make accurate stiffness calculations of composite flexural members. Comparisons to short-term deflection tests indicate that the *effective moment of inertia*, I_{eff}, is 15 to 30% lower than that calculated based on linear elastic theory, I_{equiv}. Therefore, for realistic deflection calculations, I_{eff} should be taken as $0.75I_{equiv}$ (Leon, 1990; Leon and Alsamsam, 1993).

As an alternative, one may use a lower bound moment of inertia, I_{LB}, as defined below:

$$I_{LB} = I_s + A_s(Y_{ENA} - d_3)^2 + (\Sigma Q_n / F_y)(2d_3 + d_1 - Y_{ENA})^2 \qquad \text{(C-I3-1)}$$

where

A_s = area of steel cross section, in.^{2} (mm^2)
d_1 = distance from the compression force in the concrete to the top of the steel section, in. (mm)
d_3 = distance from the resultant steel tension force for full section tension yield to the top of the steel, in. (mm)
I_{LB} = lower bound moment of inertia, in.^{4} (mm^4)
I_s = moment of inertia for the structural steel section, in.^{4} (mm^4)
ΣQ_n = sum of the nominal strengths of steel anchors between the point of maximum positive moment and the point of zero moment to either side, kips (kN)

$$Y_{ENA} = [A_s d_3 + (\Sigma Q_n/F_y)\,(2d_3 + d_1)]/[A_s + (\Sigma Q_n/F_y)], \text{ in. (mm)} \qquad \text{(C-I3-2)}$$

The use of constant stiffness in elastic analyses of continuous beams is analogous to the practice in reinforced concrete design. The stiffness calculated using a weighted average of moments of inertia in the positive moment region and negative moment regions may take the following form:

$$I_t = aI_{pos} + bI_{neg} \qquad \text{(C-I3-3)}$$

where

I_{pos} = effective moment of inertia for positive moment, in.^{4} (mm^4)
I_{neg} = effective moment of inertia for negative moment, in.^{4} (mm^4)

The effective moment of inertia is based on the cracked transformed section considering the degree of composite action. For continuous beams subjected to gravity loads only, the value of a may be taken as 0.6 and the value of b may be taken as 0.4. For composite beams used as part of a lateral force resisting system in moment frames, the value of a and b may be taken as 0.5 for calculations related to drift.

In cases where elastic behavior is desired, the cross-sectional strength of composite members is based on the superposition of elastic stresses including consideration of the effective section modulus at the time each increment of load is applied. For cases where elastic properties of partially composite beams are needed, the elastic moment of inertia may be approximated by

$$I_{equiv} = I_s + \sqrt{\left(\Sigma Q_n / C_f\right)}\left(I_{tr} - I_s\right) \qquad \text{(C-I3-4)}$$

where

I_s = moment of inertia for the structural steel section, in.^{4} (mm^4)
I_{tr} = moment of inertia for the fully composite uncracked transformed section, in.^{4} (mm^4)
ΣQ_n = strength of steel anchors between the point of maximum positive moment and the point of zero moment to either side, kips (N)
C_f = compression force in concrete slab for fully composite beam; smaller of $A_s F_y$ and $0.85 f_c' A_c$, kips (N)
A_c = area of concrete slab within the effective width, in.^{2} (mm^2)

The effective section modulus, S_{eff}, referred to the tension flange of the steel section for a partially composite beam, may be approximated by

$$S_{eff} = S_s + \sqrt{\left(\Sigma Q_n / C_f\right)}\left(S_{tr} - S_s\right) \qquad \text{(C-I3-5)}$$

where

S_s = section modulus for the structural steel section, referred to the tension flange, in.^{3} (mm^3)

S_{tr} = section modulus for the fully composite uncracked transformed section, referred to the tension flange of the steel section, in.^{3} (mm^3)

Equations C-I3-4 and C-I3-5 should not be used for ratios, $\Sigma Q_n/C_f$, less than 0.25. This restriction is to prevent excessive slip, as well as substantial loss in beam stiffness. Studies indicate that Equations C-I3-4 and C-I3-5 adequately reflect the reduction in beam stiffness and strength, respectively, when fewer anchors are used than required for full composite action (Grant et al., 1977).

U.S. practice does not generally require the following items to be considered. They are highlighted here for a designer who chooses to construct something for which these items might apply.

1. Horizontal shear strength of the slab: For the case of girders with decks with narrow troughs or thin slabs, shear strength of the slab may govern the design (for example, see Figure C-I3.1). Although the configuration of decks built in the U.S. tends to preclude this mode of failure, it is important that it be checked if the force in the slab is large or an unconventional assembly is chosen. The shear strength of the slab may be calculated as the superposition of the shear strength of the concrete plus the contribution of any slab steel crossing the shear plane. The required shear strength, as shown in the figure, is given by the difference in the force between the regions inside and outside the potential failure surface. Where experience has shown that longitudinal cracking detrimental to serviceability is likely to occur, the slab should be reinforced in the direction transverse to the supporting steel section. It is recommended that the area of such reinforcement be at least 0.002 times the concrete area in the longitudinal direction of the beam and that it be uniformly distributed.
2. Rotational capacity of hinging zones: There is no required rotational capacity for hinging zones. Where plastic redistribution to collapse is allowed, the moments

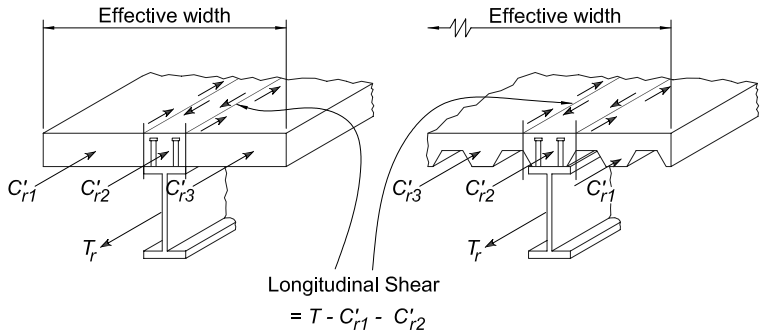

Fig. C-I3.1. Longitudinal shear in the slab [after Chien and Ritchie (1984)].

at a cross section may be as much as 30% lower than those given by a corresponding elastic analysis. This reduction in load effects is predicated, however, on the ability of the system to deform through very large rotations. To achieve these rotations, very strict local buckling and lateral-torsional buckling requirements must be fulfilled (Dekker et al., 1995). For cases in which a 10% redistribution is utilized, as permitted in Section B3.7, the required rotation capacity is within the limits provided by the local and lateral-torsional buckling provisions of Chapter F. Therefore, a rotational capacity check is not normally required for designs using this provision.

3. Minimum amount of shear connection: There is no minimum requirement for the amount of shear connection. Design aids in the U.S. often limit partial composite action to a minimum of 25% for practical reasons, but two issues arise with the use of low degrees of partial composite action. First, less than 50% composite action requires large rotations to reach the available flexural strength of the member and can result in very limited ductility after the nominal strength is reached. Second, low composite action results in an early departure from elastic behavior in both the beam and the studs. The current provisions, which are based on ultimate strength concepts, have eliminated checks for ensuring elastic behavior under service load combinations, and this can be an issue if low degrees of partial composite action are used.
4. Long-term deformations due to shrinkage and creep: There is no direct guidance in the computation of the long-term deformations of composite beams due to creep and shrinkage. The long-term deformation due to shrinkage can be calculated with the simplified model shown in Figure C-I3.2, in which the effect of shrinkage is taken as an equivalent set of end moments given by the shrinkage force (long-term restrained shrinkage strain times modulus of concrete times effective area of concrete) times the eccentricity between the center of the slab and the elastic neutral

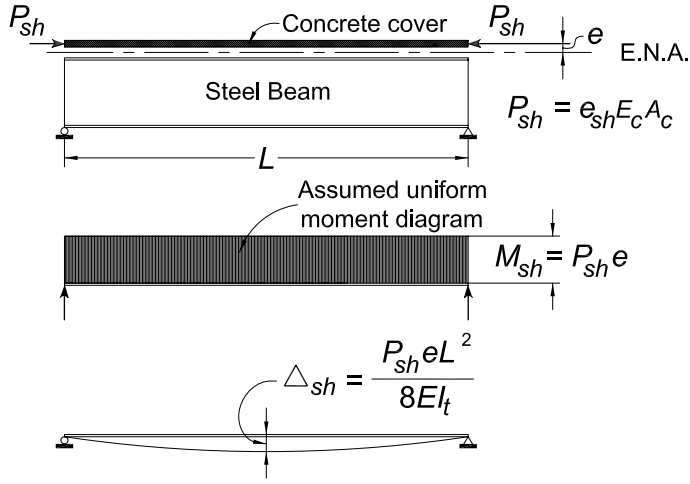

Fig. C-I3.2. Calculation of shrinkage effects [from Chien and Ritchie (1984)].

axis. If the restrained shrinkage coefficient for the aggregates is not known, the shrinkage strain for these calculations may be taken as 0.02%. The long-term deformations due to creep, which can be quantified using a model similar to that shown in the figure, are small unless the spans are long and the permanent live loads large. For shrinkage and creep effects, special attention should be given to lightweight aggregates, which tend to have higher creep coefficients and moisture absorption and lower modulus of elasticity than conventional aggregates, exacerbating any potential deflection problems. Engineering judgment is required, as calculations for long-term deformations require consideration of the many variables involved and because linear superposition of these effects is not strictly correct (ACI, 1997; Viest et al., 1997).

2a. Positive Flexural Strength

The flexural strength of a composite beam in the positive moment region may be controlled by the strength of the steel section, the concrete slab or the steel anchors. In addition, web buckling may limit flexural strength if the web is slender and a large portion of the web is in compression.

Plastic Stress Distribution for Positive Moment. When flexural strength is determined from the plastic stress distribution shown in Figure C-I3.3, the compression force, C, in the concrete slab is the smallest of:

$$C = A_{sw}F_y + 2A_{sf}F_y \tag{C-I3-6}$$

$$C = 0.85f_c'A_c \tag{C-I3-7}$$

$$C = \Sigma Q_n \tag{C-I3-8}$$

where

f_c' = specified compressive strength of concrete, ksi (MPa)
A_c = area of concrete slab within effective width, in.^{2} (mm^2)
A_s = area of steel cross section, in.^{2} (mm^2)
A_{sw} = area of steel web, in.^{2} (mm^2)
A_{sf} = area of steel flange, in.^{2} (mm^2)
F_y = minimum specified yield stress of steel, ksi (MPa)
ΣQ_n = sum of nominal strengths of steel headed stud anchors between the point of maximum positive moment and the point of zero moment to either side, kips (N)

Longitudinal slab reinforcement makes a negligible contribution to the compression force, except when Equation C-I3-7 governs. In this case, the area of longitudinal reinforcement within the effective width of the concrete slab times the yield stress of the reinforcement may be added in determining C.

The depth of the compression block is

$$a = \frac{C}{0.85f_c'b} \tag{C-I3-9}$$

where

b = effective width of concrete slab, in. (mm)

A fully composite beam corresponds to the case of C governed by the yield strength of the steel beam or the compressive strength of the concrete slab, as in Equation C-I3-6 or C-I3-7. The number and strength of steel headed stud anchors govern C for a partially composite beam as in Equation C-I3-8.

The plastic stress distribution may have the plastic neutral axis, PNA, in the web, in the top flange of the steel section, or in the slab, depending on the value of C.

The nominal plastic moment resistance of a composite section in positive bending is given by the following equation and Figure C-I3.3:

$$M_n = C(d_1 + d_2) + P_y(d_3 - d_2) \qquad \text{(C-I3-10)}$$

where

P_y = tensile strength of the steel section; $P_y = F_y A_s$, kips (N)

d_1 = distance from the centroid of the compression force, C, in the concrete to the top of the steel section, in. (mm)

d_2 = distance from the centroid of the compression force in the steel section to the top of the steel section, in. (mm). For the case of no compression in the steel section, $d_2 = 0$.

d_3 = distance from P_y to the top of the steel section, in. (mm)

Equation C-I3-10 is applicable for steel sections symmetrical about one or two axes.

According to Table B4.1b, local web buckling does not reduce the plastic strength of a bare steel beam if the beam depth-to-web thickness ratio is not larger than $3.76\sqrt{E/F_y}$. In the absence of web buckling research on composite beams, the same ratio is conservatively applied to composite beams.

For beams with more slender webs, this Specification conservatively adopts first yield as the flexural strength limit. In this case, stresses on the steel section from *permanent loads* applied to unshored beams before the concrete has cured must be superimposed on stresses on the composite section from loads applied to the beams

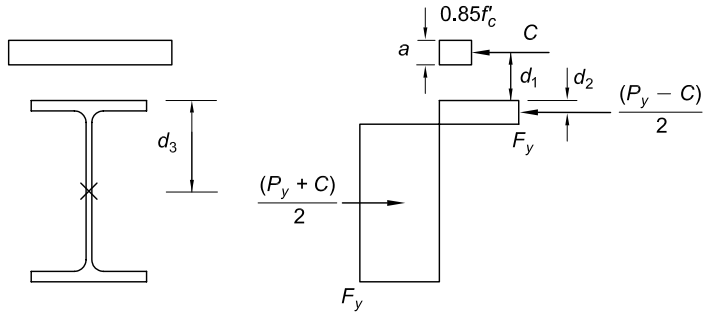

Fig. C-I3.3. Plastic stress distribution for positive moment in composite beams.

after hardening of concrete. For shored beams, all loads may be assumed to be resisted by the composite section.

When first yield is the flexural strength limit, the elastic transformed section is used to calculate stresses on the composite section. The modular ratio, $n = E_s/E_c$, used to determine the transformed section, depends on the specified unit weight and strength of concrete.

2b. Negative Flexural Strength

Plastic Stress Distribution for Negative Moment. When an adequately braced compact steel section and adequately developed longitudinal reinforcing bars act compositely in the negative moment region, the nominal flexural strength is determined from the plastic stress distributions as shown in Figure C-I3.4. Loads applied to a continuous composite beam with steel anchors throughout its length, after the slab is cracked in the negative moment region, are resisted in that region by the steel section and by properly anchored longitudinal slab reinforcement.

The tensile force, T, in the reinforcing bars is the smaller of:

$$T = F_{yr}A_r \tag{C-I3-11}$$

$$T = \Sigma Q_n \tag{C-I3-12}$$

where

A_r = area of properly developed slab reinforcement parallel to the steel beam and within the effective width of the slab, in.^{2} (mm^2)

F_{yr} = specified yield stress of the slab reinforcement, ksi (MPa)

ΣQ_n = sum of the nominal strengths of steel headed stud anchors between the point of maximum negative moment and the point of zero moment to either side, kips (N)

A third theoretical limit on T is the product of the area and yield stress of the steel section. However, this limit is redundant in view of practical limitations for slab reinforcement.

The nominal plastic moment resistance of a composite section in negative bending is given by the following equation:

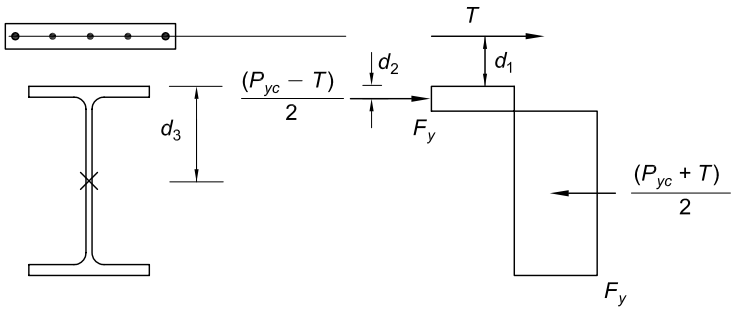

Fig. C-I3.4. Plastic stress distribution for negative moment.

$$M_n = T(d_1 + d_2) + P_{yc}(d_3 - d_2) \qquad \text{(C-I3-13)}$$

where

P_{yc} = the compressive strength of the steel section; $P_{yc} = A_s F_y$, kips (N)
d_1 = distance from the centroid of the longitudinal slab reinforcement to the top of the steel section, in. (mm)
d_2 = distance from the centroid of the tension force in the steel section to the top of the steel section, in. (mm)
d_3 = distance from P_{yc} to the top of the steel section, in. (mm)

2c. Composite Beams with Formed Steel Deck

Figure C-I3.5 is a graphic presentation of the terminology used in Section I3.2c.

The design rules for composite construction with formed steel deck are based upon a study (Grant et al., 1977) of the then-available test results. The limiting parameters listed in Section I3.2c were established to keep composite construction with formed steel deck within the available research data.

The Specification requires steel headed stud anchors to project a minimum of $1^1/_2$ in. (38 mm) above the deck flutes. This is intended to be the minimum in-place projection, and stud lengths prior to installation should account for any shortening of the stud that could occur during the welding process. The minimum specified cover over a steel headed stud anchor of $^1/_2$ in. (13 mm) after installation is intended to prevent the anchor from being exposed after construction is complete. In achieving this requirement the designer should carefully consider tolerances on steel beam camber, concrete placement and finishing tolerances, and the accuracy with which steel beam deflections can be calculated. In order to minimize the possibility of exposed anchors in the final construction, the designer should consider increasing the bare steel beam size to reduce or eliminate camber requirements (this also improves floor vibration performance), checking beam camber tolerances in the fabrication shop and monitoring concrete placement operations in the field. Wherever possible, the designer should also consider providing for anchor cover requirements above the $^1/_2$ in. (13 mm) minimum by increasing the slab thickness while maintaining the $1^1/_2$ in. (38 mm) requirement for anchor projection above the top of the steel deck as required by the Specification.

The maximum spacing of 18 in. (450 mm) for connecting composite decking to the support is intended to address a minimum uplift requirement during the construction phase prior to placing concrete.

2d. Load Transfer between Steel Beam and Concrete Slab

(1) Load Transfer for Positive Flexural strength

When studs are used on beams with formed steel deck, they may be welded directly through the deck or through prepunched or cut-in-place holes in the deck. The usual procedure is to install studs by welding directly through the deck; however, when the deck thickness is greater than 16 gage (1.5 mm) for single thickness, or 18 gage (1.2 mm) for each sheet of double thickness, or when the total thickness of galvanized coating is greater than 1.25 ounces/ft^2 (0.38

kg/m^2), special precautions and procedures recommended by the stud manufacturer should be followed.

Composite beam tests in which the longitudinal spacing of steel anchors was varied according to the intensity of the static shear, and duplicate beams in which the anchors were uniformly spaced, exhibited approximately the same ultimate strength and approximately the same amount of deflection at nominal loads. Under distributed load conditions, only a slight deformation in the concrete near the more heavily stressed anchors is needed to redistribute the horizontal shear

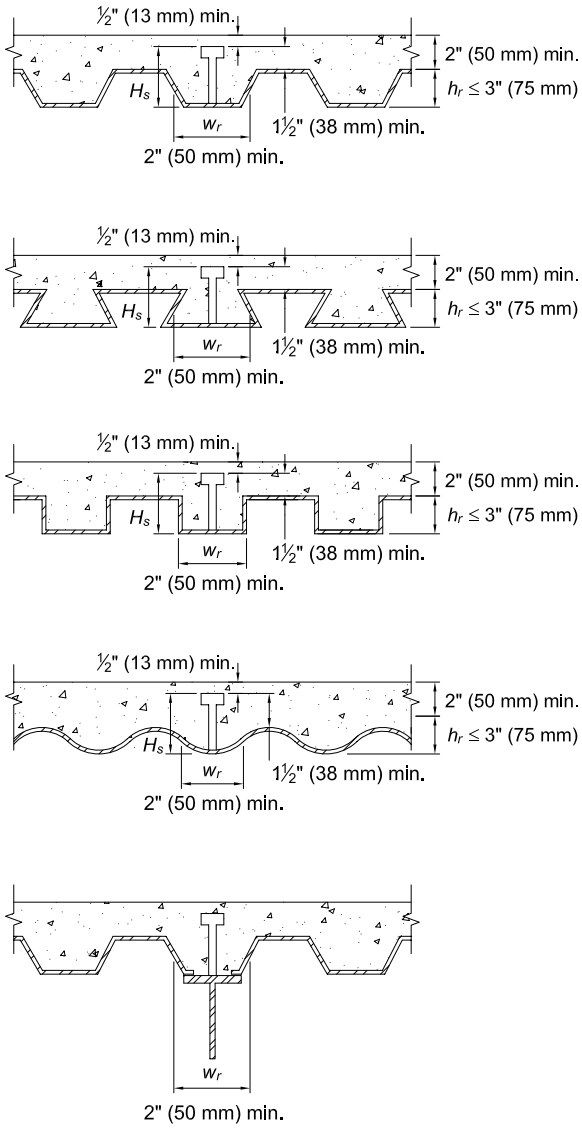

Fig. C-I3.5. Steel deck limits.

to other less heavily stressed anchors. The important consideration is that the total number of anchors be sufficient to develop the shear on either side of the point of maximum moment. The provisions of this Specification are based upon this concept of composite action.

(2) Load Transfer for Negative Flexural strength

In computing the available flexural strength at points of maximum negative bending, reinforcement parallel to the steel beam within the effective width of the slab may be included, provided such reinforcement is properly anchored beyond the region of negative moment. However, steel anchors are required to transfer the ultimate tensile force in the reinforcement from the slab to the steel beam.

When steel deck includes units for carrying electrical wiring, crossover headers are commonly installed over the cellular deck perpendicular to the ribs. These create trenches that completely or partially replace sections of the concrete slab above the deck. These trenches, running parallel to or transverse to a composite beam, may reduce the effectiveness of the concrete flange. Without special provisions to replace the concrete displaced by the trench, the trench should be considered as a complete structural discontinuity in the concrete flange.

When trenches are parallel to the composite beam, the effective flange width should be determined from the known position of the trench.

Trenches oriented transverse to composite beams should, if possible, be located in areas of low bending moment and the full required number of studs should be placed between the trench and the point of maximum positive moment. Where the trench cannot be located in an area of low moment, the beam should be designed as noncomposite.

3. Encased Composite Members

Tests of concrete-encased beams demonstrate that: (1) the encasement drastically reduces the possibility of lateral-torsional instability and prevents local buckling of the encased steel; (2) the restrictions imposed on the encasement practically prevent bond failure prior to first yielding of the steel section; and (3) bond failure does not necessarily limit the moment strength of an encased steel beam (ASCE, 1979). Accordingly, this Specification permits three alternative design methods for determination of the nominal flexural strength: (a) based on the first yield in the tension flange of the composite section; (b) based on the plastic flexural strength of the steel section alone; and (c) based on the strength of the composite section obtained from the plastic stress distribution method or the strain-compatibility method. An assessment of the data indicates that the same resistance and safety factors may be used for all three approaches (Leon et al., 2007). For concrete-encased composite beams, method (c) is applicable only when shear anchors are provided along the steel section and reinforcement of the concrete encasement meets the specified detailing requirements. For concrete-encased composite beams, no limitations are placed on the slenderness of either the composite beam or the elements of the steel section, since the encasement effectively inhibits both local and lateral buckling.

In method (a), stresses on the steel section from permanent loads applied to unshored beams before the concrete has hardened must be superimposed on stresses on the

composite section from loads applied to the beams after hardening of the concrete. In this superposition, all permanent loads should be multiplied by the dead load factor and all live loads should be multiplied by the live load factor. For shored beams, all loads may be assumed as resisted by the composite section. Complete interaction (no slip) between the concrete and steel is assumed.

Insufficient research is available to warrant coverage of partially composite encased or filled sections subjected to flexure.

4. Filled Composite Members

Tests of concrete-filled composite beams indicate that: (1) the steel tube drastically reduces the possibility of lateral-torsional instability; (2) the concrete infill changes the buckling mode of the steel HSS; and (3) bond failure does not necessarily limit the moment strength of a filled composite beam (Leon et al., 2007).

Figure C-I3.6 shows the variation of the nominal flexural strength, M_n, of the filled section with respect to the HSS slenderness. As shown, compact sections can develop the full plastic strength, M_p, in flexure. The nominal flexural strength, M_n, of noncompact sections can be determined using a linear interpolation between the plastic strength, M_p, and the yield strength, M_y, with respect to the HSS slenderness. Slender sections are limited to developing the first yield moment, M_{cr}, of the composite section where the tension flange reaches first yielding, while the compression flange is limited to the critical buckling stress, F_{cr}, and the concrete is limited to linear elastic behavior with maximum compressive stress equal to $0.70f'_c$ (Varma and Zhang, 2009). The nominal flexural strengths calculated using the Specification compare conservatively with experimental results (Varma and Zhang, 2009). Figure C-I3.7

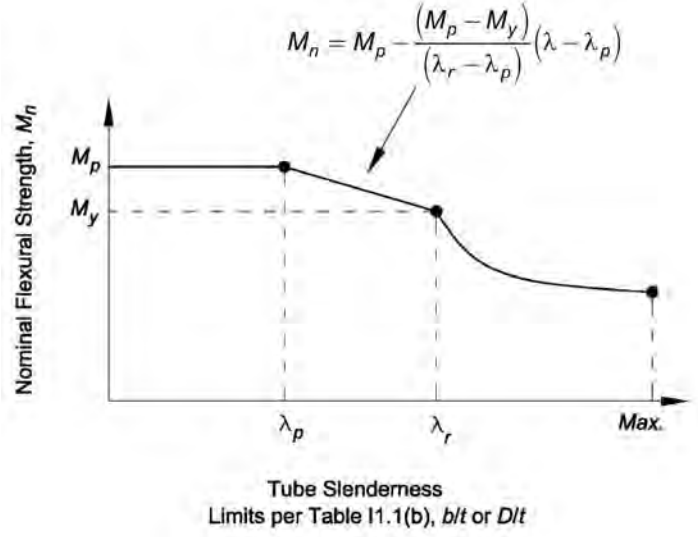

Fig. C-I3.6. Nominal flexural strength of filled beam vs. HSS slenderness.

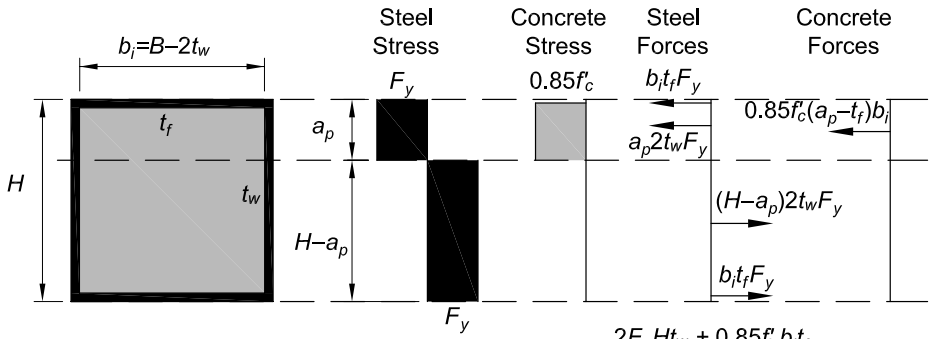

Neutral Axis Location for Force Equilibrium: $a_p = \dfrac{2F_yHt_w + 0.85f'_c\,b_it_f}{4t_wF_y + 0.85f'_cb_i}$

(a) Compact section—stress blocks for calculating M_p

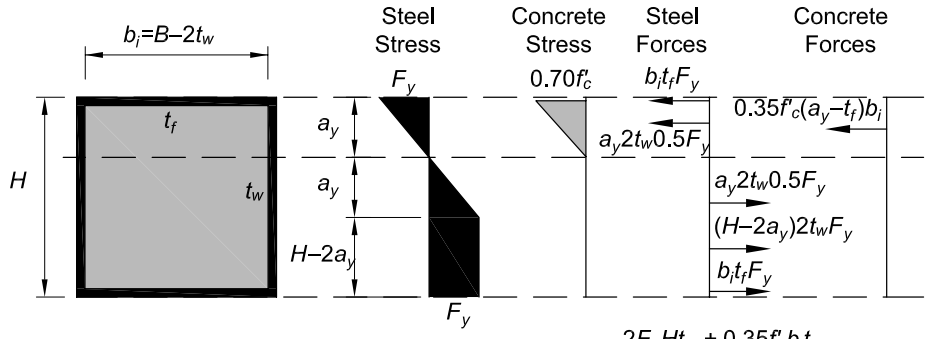

Neutral Axis Location for Force Equilibrium: $a_y = \dfrac{2F_yHt_w + 0.35f'_c\,b_it_f}{4t_wF_y + 0.35f'_cb_i}$

(b) Noncompact section—stress blocks for calculating M_y

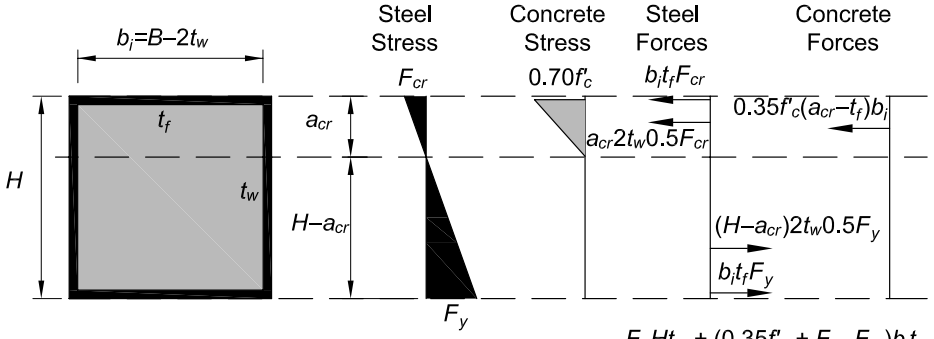

Neutral Axis Location for Force Equilibrium: $a_{cr} = \dfrac{F_yHt_w + (0.35f'_c + F_y - F_{cr})b_it_f}{t_w(F_{cr} + F_y) + 0.35f'_c\,b_i}$

(c) Slender section—stress blocks for calculating first yield moment, M_{cr}

Fig. C-I3.7. Stress blocks for calculating nominal flexural strengths of filled rectangular box sections.

shows typical stress blocks for determining the nominal flexural strengths of compact, noncompact and slender filled rectangular box sections.

I4. SHEAR

Shear provisions for filled and encased composite members have been revised from the 2005 Specification, and all shear provisions are now consolidated in Section I4.

1. Filled and Encased Composite Members

Three methods for determining the shear strength of filled and encased composite members are now offered:

(1) The available shear strength of the steel alone as specified in Chapter G. The intent of this method is to allow the designer to ignore the concrete contribution entirely and simply use the provisions of Chapter G with their associated resistance or safety factors.
(2) The strength of the reinforced concrete portion (concrete plus transverse reinforcing bars) alone as defined by ACI 318. For this method, a resistance factor of 0.75 or the corresponding safety factor of 1.5 is to be applied which is consistent with ACI 318.
(3) The strength of the steel section in combination with the contribution of the transverse reinforcing bars. For this method, the nominal shear strength (without a resistance or safety factor) of the steel section alone should be determined according to the provisions of Chapter G and then combined with the nominal shear strength of the transverse reinforcing as determined by ACI 318. These two nominal strengths should then be combined, and an overall resistance factor of 0.75 or the corresponding safety factor of 1.5 applied to the sum to determine the overall available shear strength of the member.

Though it would be logical to suggest provisions where both the contributions of the steel section and reinforced concrete are superimposed, there is insufficient research available to justify such a combination.

2. Composite Beams with Formed Steel Deck

A conservative approach to shear provisions for composite beams with steel headed stud or steel channel anchors is adopted by assigning all shear to the steel section in accordance with Chapter G. This method neglects any concrete contribution and serves to simplify design.

I5. COMBINED FLEXURE AND AXIAL FORCE

As with all frame analyses in this Specification, required strengths for composite beam-columns should be obtained from second-order analysis or amplified first-order analysis as specified in Chapter C and Appendix 7. Sections I2.1 and I2.2 suggest appropriate reduced stiffness, EI^*, for composite compression members to be used with the direct analysis method of Chapter C. For the assessment of the available strength, the Specification provisions for interaction between axial force and flexure in composite members are the same as for bare steel members as covered in

Section H1.1. The provisions also permit an analysis based on the strength provisions of Section I1.2 which would lead to an interaction diagram similar to those used in reinforced concrete design. This latter approach is discussed here.

For encased composite members, the available axial strength, including the effects of buckling, and the available flexural strength can be calculated using either the plastic stress distribution method or the strain-compatibility method (Leon et al., 2007; Leon and Hajjar, 2008). For filled composite members, the available axial and flexural strengths can be calculated using Sections I2.2 and I3.4, respectively, which also include the effects of local buckling for noncomposite and slender sections (classified according to Section I1.4).

The section below describes three different approaches to design composite beam-columns that are applicable to both concrete-encased steel shapes and to compact concrete-filled HSS sections. The first two approaches are based on variations in the plastic stress distribution method while the third method references AISC Design Guide 6, *Load and Resistance Factor Design of W-shapes Encased in Concrete* (Griffis, 1992), which is based on an earlier version of the Specification. The strain compatibility method is similar to that used in the design of concrete compression members as specified in ACI 318 Chapter 10. The design of noncompact and slender concrete-filled sections is limited to the use of method 1 described below (Varma and Zhang, 2009).

Method 1—Interaction Equations of Section H1. The first approach applies to doubly symmetric composite beam-columns, the most common geometry found in building construction. For this case, the interaction equations of Section H1 provide a conservative assessment of the available strength of the member for combined axial compression and flexure (see Figure C-I5.1). These provisions may also be used for

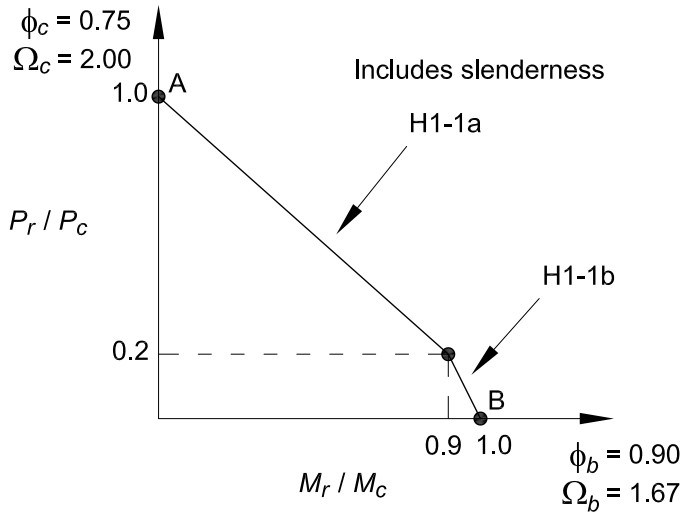

Fig. C-I5.1. Interaction diagram for composite beam-column design—Method 1.

combined axial tension and flexure. The degree of conservatism generally depends on the extent of concrete contribution to the overall strength relative to the steel contribution. The larger the load carrying contribution coming from the steel section the less conservative the strength prediction of the interaction equations from Section H1. Thus, for example, the equations are generally more conservative for members with high concrete compressive strength as compared to members with low concrete compressive strength. The advantages to this method include the following: (1) The same interaction equations used for steel beam-columns are applicable; and (2) Only two anchor points are needed to define the interaction curves—one for pure flexure (point B) and one for pure axial load (point A). Point A is determined using Equations I2-2 or I2-3, as applicable. Point B is determined as the flexural strength of the section according to the provisions of Section I3. Note that slenderness must also be considered using the provisions of Section I2. For many common concrete filled HSS sections, available axial strengths are provided in tables in the manual.

The design of noncompact and slender concrete-filled sections is limited to this method of interaction equation solution. The other two methods described below may not be used for their design, due to lack of research to validate those approaches for cross sections that are not compact. The nominal strengths predicted using the equations of Section H1 compare conservatively with a wide range of experimental data for noncompact/slender rectangular and round filled sections (Varma and Zhang, 2009).

Method 2—Interaction Curves from the Plastic Stress Distribution Method. The second approach applies to doubly symmetric composite beam-columns and is based on developing interaction surfaces for combined axial compression and flexure at the nominal strength level using the plastic stress distribution method. This approach results in interaction surfaces similar to those shown in Figure C-I5.2. The four points identified in Figure C-I5.2 are defined by the plastic stress distribution used

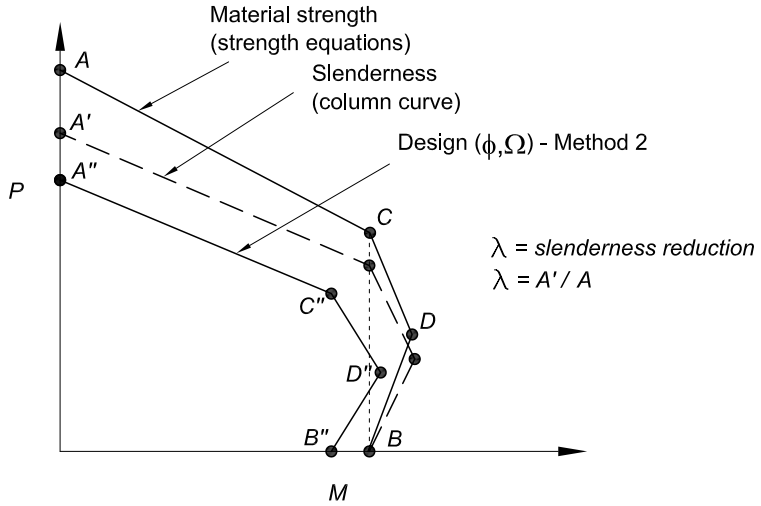

Fig. C-I5.2 Interaction diagram for composite beam-columns—Method 2.

in their determination. The strength equations for concrete encased W-shapes and concrete filled HSS shapes used to define each point A through D are provided in the AISC *Design Examples* available at **www.aisc.org** (Geschwindner, 2010b). Point A is the pure axial strength determined according to Section I2. Point B is determined as the flexural strength of the section according to the provisions of Section I3. Point C corresponds to a plastic neutral axis location that results in the same flexural strength as Point B, but including axial compression. Point D corresponds to an axial compressive strength of one half of that determined for Point C. An additional Point E (see Figure C-I1.1) is included (between points A and C) for encased W-shapes bent about their weak axis. Point E is an arbitrary point, generally corresponding to a plastic neutral axis location at the flange tips of the encased W-shape, necessary to better reflect bending strength for weak-axis bending of encased shapes. Linear interpolation between these anchor points may be used. However, with this approach, care should be taken in reducing Point D by a resistance factor or to account for member slenderness, as this may lead to an unsafe situation whereby additional flexural strength is permitted at a lower axial compressive strength than predicted by the cross section strength of the member. This potential problem may be avoided through a simplification to this method whereby point D is removed from the interaction surface. Figure C-I5.3 demonstrates this simplification with the vertical dashed line that connects point C″ to point B″. Once the nominal strength interaction surface is determined, length effects according to Equations I2-2 and I2-3 must be applied. Note that the same slenderness reduction factor ($\lambda = A'/A$ in Figure C-I5.2, equal to P_n/P_{no}, where P_n and P_{no} are calculated from Section I2) applies to points A, C, D and E. The available strength is then determined by applying the compression and bending resistance factors or safety factors.

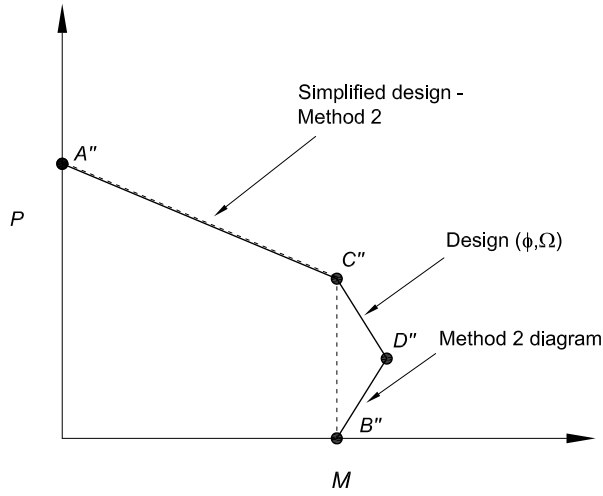

Fig. C-I5.3 Interaction diagram for composite beam-columns—Method 2 simplified.

Using linear interpolation between points A″, C″ and B″ in Figure C-I5.3, the following interaction equations may be derived for composite beam-columns subjected to combined axial compression plus biaxial flexure:

(a) If $P_r < P_C$

$$\frac{M_{rx}}{M_{Cx}} + \frac{M_{ry}}{M_{Cy}} \le 1 \qquad \text{(C-I5-1a)}$$

(b) If $P_r \ge P_C$

$$\frac{P_r - P_C}{P_A - P_C} + \frac{M_{rx}}{M_{Cx}} + \frac{M_{ry}}{M_{Cy}} \le 1 \qquad \text{(C-I5-1b)}$$

where

P_r = required compressive strength, kips (N)
P_A = available axial compressive strength at Point A'', kips (N)
P_C = available axial compressive strength at Point C'', kips (N)
M_r = required flexural strength, kip-in. (N-mm)
M_C = available flexural strength at Point C'', kip-in. (N-mm)
x = subscript relating symbol to strong axis bending
y = subscript relating symbol to weak axis bending

For design according to Section B3.3 (LRFD):

$P_r = P_u$ = required compressive strength using LRFD load combinations, kips (N)
P_A = design axial compressive strength at Point A″ in Figure C-I5.3, determined in accordance with Section I2, kips (N)
P_C = design axial compressive strength at Point C'', kips (N)
M_r = required flexural strength using LRFD load combinations, kip-in. (N-mm)
M_C = design flexural strength at Point C″, determined in accordance with Section I3, kip-in. (N-mm)

For design according to Section B3.4 (ASD):

$P_r = P_a$ = required compressive strength using ASD load combinations, kips (N)
P_A = allowable compressive strength at Point A″ in Figure C-I5.3, determined in accordance with Section I2, kips (N)
P_C = allowable axial compressive strength at Point C″, kips (N)
M_r = required flexural strength using ASD load combinations, kip-in. (N-mm)
M_C = allowable flexural strength at Point C″, determined in accordance with Section I3, kip-in. (N-mm)

For *biaxial bending*, the value of the axial compressive strength at Point C may be different when computed for the major and minor axis. The smaller of the two values should be used in Equation C-I5-1b and for the limits in Equations C-I5-1a and b.

Method 3—Design Guide 6. The approach presented in AISC Design Guide 6, *Load and Resistance Factor Design of W-Shapes Encased in Concrete* (Griffis, 1992) may

also be used to determine the beam-column strength of concrete encased W-shapes. Although this method is based on an earlier version of the Specification, axial load and moment strengths can conservatively be determined directly from the tables in this design guide. The difference in resistance factors from the earlier Specification may safely be ignored.

I6. LOAD TRANSFER

1. General Requirements

External forces are typically applied to composite members through direct connection to the steel member, bearing on the concrete, or a combination thereof. Design of the connection for force application shall follow the applicable limit states within Chapters J and K of the Specification as well as the provisions of Section I6. Note that for concrete bearing checks on filled composite members, confinement can affect the bearing strength for external force application as discussed in Commentary Section I6.2.

Once a load path has been provided for the introduction of external force to the member, the interface between the concrete and steel must be designed to transfer the longitudinal shear required to obtain force equilibrium within the composite section. Section I6.2 contains provisions for determining the magnitude of longitudinal shear to be transferred between the steel and concrete depending upon the external force application condition. Section I6.3 contains provisions addressing mechanisms for the transfer of longitudinal shear.

The load transfer provisions of the Specification are primarily intended for the transfer of longitudinal shear due to applied axial forces. Load transfer of longitudinal shear due to applied bending moments is beyond the scope of the Specification; however, tests (Lu and Kennedy, 1994; Prion and Boehme, 1994; Wheeler and Bridge, 2006) indicate that filled composite members can develop their full plastic moment capacity based on bond alone without the use of additional anchorage.

2. Force Allocation

The Specification addresses conditions in which the entire external force is applied to the steel or concrete as well as conditions in which the external force is applied to both materials concurrently. The provisions are based upon the assumption that in order to achieve equilibrium across the cross section, transfer of longitudinal shears along the interface between the concrete and steel shall occur such that the resulting force levels within the two materials may be proportioned according to a plastic stress distribution model. Load allocation based on the plastic stress distribution model is represented by Equations I6-1 and I6-2. Equation I6-1 represents the magnitude of force that is present within the concrete encasement or concrete fill at equilibrium. The longitudinal shear generated by loads applied directly to the steel section is determined based on the amount of force to be distributed to the concrete according to Equation I6-1. Conversely, when load is applied to the concrete section only, the longitudinal shear required for cross-sectional equilibrium is based upon the amount of force to be distributed to the steel according to Equation I6-2. Where loads

are applied concurrently to the two materials, the longitudinal shear force to be transferred to achieve cross-sectional equilibrium can be taken as either the difference in magnitudes between the portion of external force applied directly to the concrete and that required by Equation I6-1 or the portion of external force applied directly to the steel section and that required by Equation I6-2.

When external forces are applied to the concrete of a filled composite member via bearing, it is acceptable to assume that adequate confinement is provided by the steel encasement to allow the maximum available bearing strength permitted by Equation J8-2 to be used. This strength is obtained by setting the term $\sqrt{A_2 / A_1} = 2$. This discussion is in reference to the introduction of external load to the compression member. The transfer of longitudinal shear within the compression member via bearing mechanisms such as internal steel plates is addressed directly in Section I6.3a.

3. Force Transfer Mechanisms

Transfer of longitudinal shear by direct bearing via internal bearing mechanisms (such as internal bearing plates) or shear connection via steel anchors is permitted for both filled and encased composite members. Transfer of longitudinal shear via direct bond interaction is permitted solely for filled composite members. Although it is recognized that force transfer also occurs by direct bond interaction between the steel and concrete for encased composite columns, this mechanism is typically ignored and shear transfer is generally carried out solely with steel anchors (Griffis, 1992).

The use of the force transfer mechanism providing the largest resistance is permissible. Superposition of force transfer mechanisms is not permitted as the experimental data indicate that direct bearing or shear connection often does not initiate until after direct bond interaction has been breached, and little experimental data is available regarding the interaction of direct bearing and shear connection via steel anchors.

3a. Direct Bearing

For the general condition of assessing load applied directly to concrete in bearing, and considering a supporting concrete area that is wider on all sides than the loaded area, the nominal bearing strength for concrete may be taken as

$$R_n = 0.85 f_c' A_1 \sqrt{A_2 / A_1} \qquad \text{(C-I6-1)}$$

where

A_1 = loaded area of concrete, in.^{2} (mm^2)
A_2 = maximum area of the portion of the supporting surface that is geometrically similar to and concentric with the loaded area, in.^{2} (mm^2)
f_c' = specified compressive concrete strength, ksi (MPa)

The value of $\sqrt{A_2 / A_1}$ must be less than or equal to 2 (ACI, 2008).

For the specific condition of transferring longitudinal shear by direct bearing via internal bearing mechanisms, the Specification uses the maximum nominal bearing

strength allowed by Equation C-I6-1 of $1.7f_c'A_1$ as indicated in Equation I6-3. The resistance factor for bearing, ϕ_B, is 0.65 (and the associated safety factor, Ω_B, is 2.31) in accordance with ACI 318.

3b. Shear Connection

Steel anchors for shear connection shall be designed as composite components according to Section I8.3.

3c. Direct Bond Interaction

Force transfer by direct bond is commonly used in filled composite members as long as the connections are detailed to limit local deformations (API, 1993; Roeder et al., 1999). However, there is large scatter in the experimental data on the bond strength and associated force transfer length of filled composite compression members, particularly when comparing tests in which the concrete core is pushed through the steel tube (push-out tests) to tests in which a beam is connected just to the steel tube and beam shear is transferred to the filled composite compression member. The added eccentricities of the connection tests typically raise the bond strength of the filled composite compression members.

A reasonable lower bound value of the bond strength of filled composite compression members that meet the provisions of Section I2 is 60 psi (0.4 MPa). While push-out tests often show bond strengths below this value, eccentricity introduced into the connection is likely to increase the bond strength to this value or higher. Experiments also indicate that a reasonable assumption for the distance along the length of the filled composite compression member required to transfer the force from the steel HSS to the concrete core is approximately equal to twice the width of a rectangular HSS or the diameter of a round HSS, to either side of the point of load transfer.

The equations for direct bond interaction for filled composite compression members assume that one face of a rectangular filled composite compression member or one-quarter of the perimeter of a round filled composite compression member is engaged in the transfer of stress by direct bond interaction for the connection elements framing into the compression member from each side. If connecting elements frame in from multiple sides, the direct bond interaction strengths may be increased accordingly. The scatter in the data leads to the recommended low value of the resistance factor, ϕ, and the corresponding high value of the safety factor, Ω.

4. Detailing Requirements

To avoid overstressing the structural steel section or the concrete at connections in encased or filled composite members, transfer of longitudinal shear is required to occur within the load introduction length. The load introduction length is taken as two times the minimum transverse dimension of the composite member both above and below the load transfer region. The load transfer region is generally taken as the depth of the connecting element as indicated in Figure C-I6.1. In cases where the

applied forces are of such a magnitude that the required longitudinal shear transfer cannot take place within the prescribed load introduction length, the designer should treat the compression member as noncomposite along the additional length required for shear transfer.

For encased composite members, steel anchors are required throughout the compression member length in order to maintain composite action of the member under incidental moments (including flexure induced by incipient buckling). These anchors are typically placed at the maximum permitted spacing according to Section I8.3e. Additional anchors required for longitudinal shear transfer shall be located within the load introduction length as described previously.

Unlike concrete encased members, steel anchors in filled members are required only when used for longitudinal shear transfer and are not required along the length of the member outside of the introduction region. This discrepancy is due to the adequate confinement provided by the steel encasement which prevents the loss of composite action under incidental moments.

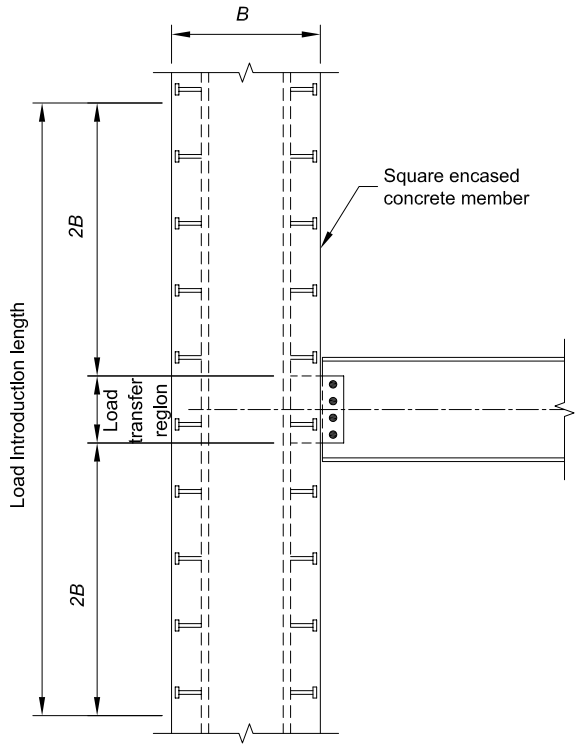

Fig. C-I6.1. Load transfer region/load introduction length.

I7. COMPOSITE DIAPHRAGMS AND COLLECTOR BEAMS

In composite construction, floor or roof slabs consisting of composite metal deck and concrete fill are typically connected to the structural framing to form composite diaphragms. Diaphragms are horizontally spanning members, analogous to deep beams, which distribute seismic and/or wind loads from their origin to the lateral-force-resisting-system either directly or in combination with load transfer elements known as collectors or collector beams (also known as diaphragm struts and drag struts).

Diaphragms serve the important structural function of interconnecting the components of a structure to behave as a unit. Diaphragms are commonly analyzed as simple-span or continuously spanning deep beams, and hence are subject to shear, moment and axial forces as well as the associated deformations. Further information on diaphragm classifications and behavior can be found in AISC (2006a) and SDI (2001).

Composite Diaphragm Strength

Diaphragms should be designed to resist all forces associated with the collection and distribution of seismic and/or wind forces to the lateral force resisting system. In some cases, loads from other floors should also be included, such as at a level where a horizontal offset in the lateral force resisting system exists. Several methods exist for determining the in-place shear strength of composite diaphragms. Three such methods are as follows:

(1) As determined for the combined strength of composite deck and concrete fill including the considerations of composite deck configuration as well as type and layout of deck attachments. One publication which is considered to provide such guidance is the SDI *Diaphragm Design Manual* (SDI, 2004). This publication covers many aspects of diaphragm design including strength and stiffness calculations. Calculation procedures are also provided for alternative deck to framing connection methods such as puddle welding and mechanical fasteners in cases where anchors are not used. Where stud anchors are used, stud shear strength values shall be as determined in Section I8.

(2) As the thickness of concrete over the steel deck is increased, the shear strength can approach that for a concrete slab of the same thickness. For example, in composite floor deck diaphragms having cover depths between 2 in. (50 mm) and 6 in. (150 mm), measured shear stresses in the order of $0.11\sqrt{f_c'}$ (where f_c' is in units of ksi) have been reported. In such cases, the diaphragm strength of concrete metal deck slabs can conservatively be based on the principles of reinforced concrete design (ACI, 2008) using the concrete and reinforcement above the metal deck ribs and ignoring the beneficial effect of the concrete in the flutes.

(3) Results from in-plane tests of concrete filled diaphragms.

Collector Beams and Other Composite Elements

Horizontal diaphragm forces are transferred to the steel lateral load resisting frame as axial forces in collector beams (also known as diaphragm struts or drag struts). The design of collector beams has not been addressed directly in this Chapter. The rigorous design of composite beam-columns (collector beams) is complex and few

detailed guidelines exist on such members. Until additional research becomes available, a reasonable simplified design approach is provided as follows:

Force Application. Collector beams can be designed for the combined effects of axial load due to diaphragm forces as well as flexure due to gravity and/or lateral loads. The effect of the vertical offset (eccentricity) between the plane of the diaphragm and the centerline of the collector element should be investigated for design.

Axial Strength. The available axial strength of collector beams can be determined according to the noncomposite provisions of Chapter D and Chapter E. For compressive loading, collector beams are generally considered unbraced for buckling between braced points about their major axis, and fully braced by the composite diaphragm for buckling about the minor axis.

Flexural Strength. The available flexural strength of collector beams can be determined using either the composite provisions of Chapter I or the noncomposite provisions of Chapter F. It is recommended that all collector beams, even those designed as noncomposite members, contain enough anchors to ensure that a minimum of 25% composite action is achieved. This recommendation is intended to prevent designers from utilizing a small amount of anchors solely to transfer diaphragm forces on a beam designed as a noncomposite member. Anchors designed only to transfer horizontal shear due to lateral forces will still be subjected to horizontal shear due to flexure from gravity loads superimposed on the composite section and could become overloaded under gravity loading conditions. Overloading the anchors could result in loss of stud strength which could inhibit the ability of the collector beam to function as required for the transfer of diaphragm forces due to lateral loads.

Interaction. Combined axial force and flexure can be assessed using the interaction equations provided in Chapter H. As a reasonable simplification for design purposes, it is acceptable to use the noncomposite axial strength and the composite flexural strength in combination for determining interaction.

Shear Connection. It is not required to superimpose the horizontal shear due to lateral forces with the horizontal shear due to flexure for the determination of steel anchor requirements. The reasoning behind this methodology is twofold. First, the load combinations as presented in ASCE/SEI 7 (ASCE, 2010) provide reduced live load levels for load combinations containing lateral loads. This reduction decreases the demand on the steel anchors and provides additional capacity for diaphragm force transfer. Secondly, horizontal shear due to flexure flows in two directions. For a uniformly loaded beam, the shear flow emanates outwards from the center of the beam as illustrated in Figure C-I7.1(a). Lateral loads on collector beams induce shear in one direction. As these shears are superimposed, the horizontal shears on one portion of the beam are increased, and the horizontal shears on the opposite portion of the beam are decreased as illustrated in Figure C-I7.1(b). In lieu of additional research, it is considered acceptable for the localized additional loading of the steel anchors in the additive beam segment to be considered offset by the concurrent unloading of the steel anchors in the subtractive beam segment up to a force level corresponding to the summation of the nominal strengths of all studs placed on the beam.

I8. STEEL ANCHORS

1. General

This section covers the strength, placement and limitations on the use of steel anchors in composite construction. A new definition is provided for "steel anchor" which replaces the old term "shear connector" in the 2005 and earlier Specifications. This change was made to recognize the more generic term "anchor" as used in ACI 318, PCI and throughout the industry. This term includes the traditional "shear connector," now defined as a "steel headed stud anchor" and a "steel channel anchor" both of which have been part of previous Specifications. Both steel headed stud anchors and hot-rolled steel channel anchors are addressed in the Specification. The design provisions for steel anchors are given for composite beams with solid slabs or with formed steel deck and for composite components. A new glossary term is provided for "composite component" as a member, connecting element or assemblage in which steel and concrete elements work as a unit in the distribution of internal forces. This term excludes composite beams with solid slabs or formed steel deck. The provisions for composite components include the use of a resistance factor or safety factor applied to the nominal strength of the steel anchor, while for composite beams the resistance factor and safety factor are part of the composite beam resistance and safety factor.

Studs not located directly over the web of a beam tend to tear out of a thin flange before attaining full shear-resisting strength. To guard against this contingency,

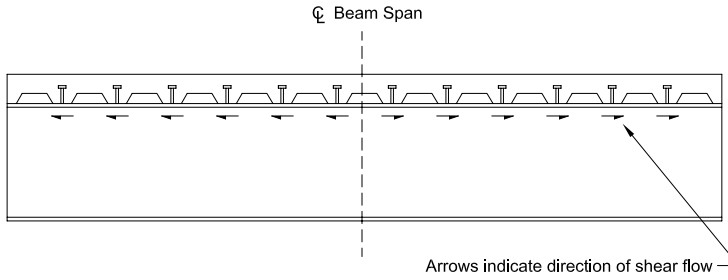

(a) Shear flow due to gravity loads only

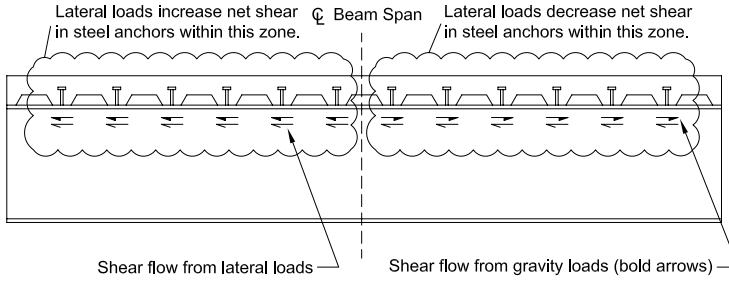

(b) Shear flow due to gravity and lateral loads in combination

Fig. C-I7.1. Shear flow at collector beams.

the size of a stud not located over the beam web is limited to $2^1/_2$ times the flange thickness (Goble, 1968). The practical application of this limitation is to select only beams with flanges thicker than the stud diameter divided by 2.5.

Section I8.2 requires a minimum ratio value of four for the overall headed stud anchor height to the shank diameter when calculating the nominal shear strength of a steel headed stud anchor in a composite beam. This requirement has been used in previous Specifications and has had a record of successful performance. For calculating the nominal shear strength of a steel headed stud anchor in other composite components, Section I8.3 increases this minimum ratio value to five for normal weight concrete and seven for lightweight concrete. Additional increases in the minimum value of this ratio are required for computing the nominal tensile strength or the nominal strength for interaction of shear and tension in Section I8.3. The provisions of Section I8.3 also establish minimum edge distances and center-to-center spacings for steel headed stud anchors if the nominal strength equations in that section are to be used. These limits are established in recognition of the fact that only steel failure modes are checked in the calculation of the nominal anchor strengths in Equations I8-3, I8-4 and I8-5. Concrete failure modes are not checked explicitly in these equations (Pallarés and Hajjar, 2010a, 2010b), whereas concrete failure is checked in Equation I8-1. This is discussed further in Commentary Section I8.3.

2. Steel Anchors in Composite Beams

2a. Strength of Steel Headed Stud Anchors

The present strength equations for composite beams and steel stud anchors are based on the considerable research that has been published in recent years (Jayas and Hosain, 1988a, 1988b; Mottram and Johnson, 1990; Easterling et al., 1993; Roddenberry et al., 2002a). Equation I8-1 contains R_g and R_p factors to bring these composite beam strength requirements comparable to other codes around the world. Other codes use a stud strength expression similar to the AISC Specification but the stud strength is reduced by a ϕ factor of 0.8 in the Canadian code (CSA, 2009) and by an even lower partial safety factor ($\phi = 0.60$) for the corresponding stud strength equations in *Eurocode 4* (CEN, 2003). The AISC Specification includes the stud anchor resistance factor as part of the overall composite beam resistance factor.

The majority of composite steel floor decks used today have a stiffening rib in the middle of each deck flute. Because of the stiffener, studs must be welded off-center in the deck rib. Studies have shown that steel studs behave differently depending upon their location within the deck rib (Lawson, 1992; Easterling et al., 1993; Van der Sanden, 1995; Yuan, 1996; Johnson and Yuan, 1998; Roddenberry et al., 2002a, 2002b). The so-called "weak" (unfavorable) and "strong" (favorable) positions are illustrated in Figure C-I8.1. Furthermore, the maximum value shown in these studies for studs welded through steel deck is on the order of 0.7 to $0.75F_uA_{sc}$. Studs placed in the weak position have strengths as low as $0.5F_uA_{sc}$.

The strength of stud anchors installed in the ribs of concrete slabs on formed steel deck with the ribs oriented perpendicular to the steel beam is reasonably estimated by the strength of stud anchors computed from Equation I8-1, which sets the default

value for steel stud strength equal to that for the weak stud position. Both AISC (1997a) and the Steel Deck Institute (SDI, 2001) recommend that studs be detailed in the strong position, but ensuring that studs are placed in the strong position is not necessarily an easy task because it is not always easy for the installer to determine where along the beam the particular rib is located relative to the end, midspan, or point of zero shear. Therefore, the installer may not be clear on which location is the strong, and which is the weak position.

In most composite floors designed today, the ultimate strength of the composite section is governed by the stud strength, as full composite action is typically not the most economical solution to resist the required strength. The degree of composite action, as represented by the ratio $\Sigma Q_n/F_yA_s$ (the total shear connection strength divided by the yield strength of the steel cross section), influences the flexural strength as shown in Figure C-I8.2.

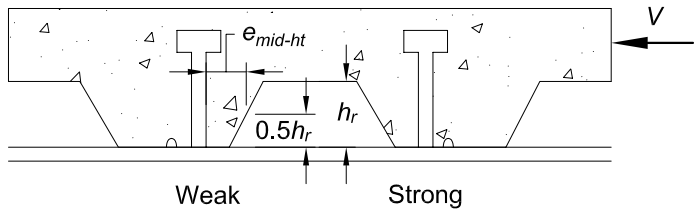

Fig. C-I8.1. Weak and strong stud positions [Roddenberry et al. (2002b)].

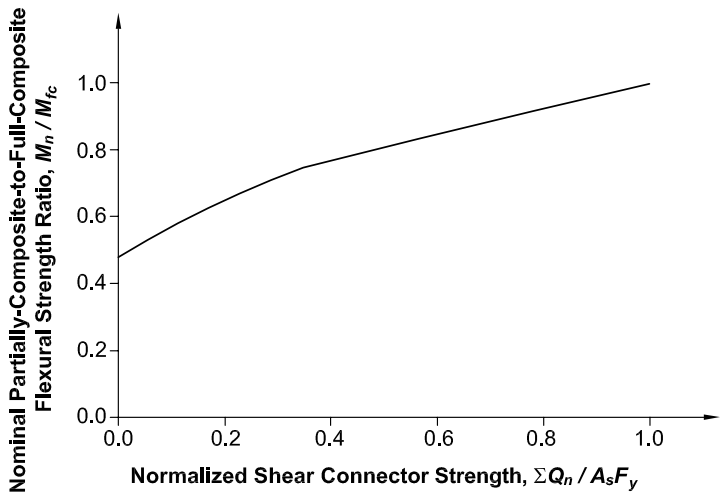

Fig. C-I8.2. Normalized flexural strength versus shear connection strength ratio (W16×31, F_y = 50 ksi, Y2 = 4.5 in.) (Easterling et al., 1993).

It can be seen from Figure C-I8.2 that a relatively large change in shear connection strength results in a much smaller change in flexural strength. Thus, formulating the influence of steel deck on shear anchor strength by conducting beam tests and back-calculating through the flexural model, as was done in the past, leads to an inaccurate assessment of stud strength when installed in metal deck.

The changes in stud anchor requirements that occurred in the 2005 Specification were not a result of either structural failures or performance problems. Designers concerned about the strength of existing structures based on earlier Specification requirements need to note that the slope of the curve shown in Figure C-I8.2 is rather flat as the degree of composite action approaches one. Thus, even a large change in steel stud strength does not result in a proportional decrease of the flexural strength. In addition, as noted above, the current expression does not account for all the possible shear force transfer mechanisms, primarily because many of them are difficult or impossible to quantify. However, as noted in Commentary Section I3.1, as the degree of composite action decreases, the deformation demands on steel studs increase. This effect is reflected by the increasing slope of the relationship shown in Figure C-I8.2 as the degree of composite action decreases. Thus designers should specify 50% composite action or more.

The reduction factor, R_p, for headed stud anchors used in composite beams with no decking has been reduced from 1.0 to 0.75 in the 2010 Specification. The methodology used for headed stud anchors that incorporates R_g and R_p was implemented in the 2005 Specification. The research (Roddenberry et al., 2002a) in which the factors (R_g and R_p) were developed focused almost exclusively on cases involving the use of headed stud anchors welded through steel deck. The research pointed to the likelihood that the solid slab case should use $R_p = 0.75$, however, the body of test data had not been established to support the change. More recent research has shown that the 0.75 factor is appropriate (Pallarés and Hajjar, 2010a).

2b. Strength of Steel Channel Anchors

Equation I8-2 is a modified form of the formula for the strength of channel anchors presented in Slutter and Driscoll (1965), which was based on the results of pushout tests and a few simply supported beam tests with solid slabs by Viest et al. (1952). The modification has extended its use to lightweight concrete.

Eccentricities need not be considered in the weld design for cases where the welds at the toe and heel of the channel are greater than $^3/_{16}$ in. (5 mm) and the anchor meets the following requirements:

$$1.0 \le \frac{t_f}{t_w} \le 5.5$$

$$\frac{H}{t_w} \ge 8.0$$

$$\frac{L_c}{t_f} \ge 6.0$$

$$0.5 \le \frac{R}{t_w} \le 1.6$$

where

t_f = flange thickness of channel anchor, in. (mm)
t_w = thickness of channel anchor web, in. (mm)
H = height of anchor, in. (mm)
L_c = length of anchor, in. (mm)
R = radius of the fillet between the flange and the web of the anchor, in. (mm)

2d. Detailing Requirements

Uniform spacing of shear anchors is permitted, except in the presence of heavy concentrated loads.

The minimum spacing of anchors along the length of the beam, in both flat soffit concrete slabs and in formed steel deck with ribs parallel to the beam, is six diameters; this spacing reflects development of shear planes in the concrete slab (Ollgaard et al., 1971). Because most test data are based on the minimum transverse spacing of four diameters, this transverse spacing was set as the minimum permitted. If the steel beam flange is narrow, this spacing requirement may be achieved by staggering the studs with a minimum transverse spacing of three diameters between the staggered row of studs. When deck ribs are parallel to the beam and the design requires more studs than can be placed in the rib, the deck may be split so that adequate spacing is available for stud installation. Figure C-I8.3 shows possible anchor arrangements.

3. Steel Anchors in Composite Components

This section applies to steel headed stud anchors used primarily in the load transfer (connection) region of composite compression members and beam-columns, concrete-encased and filled composite beams, composite coupling beams, and composite walls (see Figure C-I8.4), where the steel and concrete are working compositely within a member. In such cases, it is possible that the steel anchor will be subjected to shear, tension, or interaction of shear and tension. As the strength of the connectors in the load transfer region must be assessed directly (rather than implicitly within the strength assessment of a composite member), a resistance or safety factor should be applied, comparable to the design of bolted connections in Chapter J.

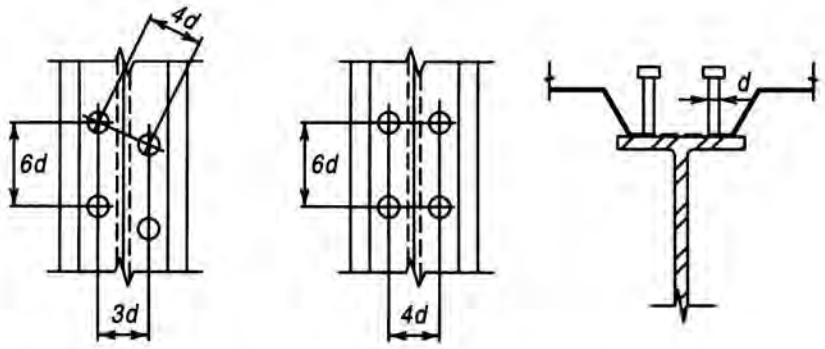

Fig. C-I8.3. Steel anchor arrangements.

These provisions are not intended for hybrid construction where the steel and concrete are not working compositely, such as with embed plates. Section I8.2 specifies the strength of steel anchors embedded in a solid concrete slab or in a concrete slab with formed steel deck in a composite beam.

Data from a wide range of experiments indicate that the failure of steel headed stud anchors subjected to shear occurs in the steel shank or weld in a large percentage of cases if the ratio of the overall height to the shank diameter of the steel headed stud anchor is greater than five for normal weight concrete. In the case of lightweight concrete, the necessary minimum ratio between the overall height of the stud and the diameter increases up to seven (Pallarés and Hajjar, 2010a). A similarly large percentage of failures occur in the steel shank or weld of steel headed stud anchors subjected to tension or interaction of shear and tension if the ratio of the overall height to shank diameter of the steel headed stud anchor is greater than eight for normal weight concrete. In the case of lightweight concrete, the necessary minimum ratio between the overall height of the stud and the diameter increases up to ten for steel headed stud anchors subjected to tension (Pallarés and Hajjar, 2010b). For steel headed stud anchors subjected to interaction of shear and tension in lightweight concrete, there are so few experiments available that it is not possible to discern sufficiently when the steel material will control the failure mode. For the strength of steel headed stud anchors in lightweight concrete subjected to interaction of shear and tension, it is recommended that the provisions of ACI 318 (ACI, 2008) Appendix D be used.

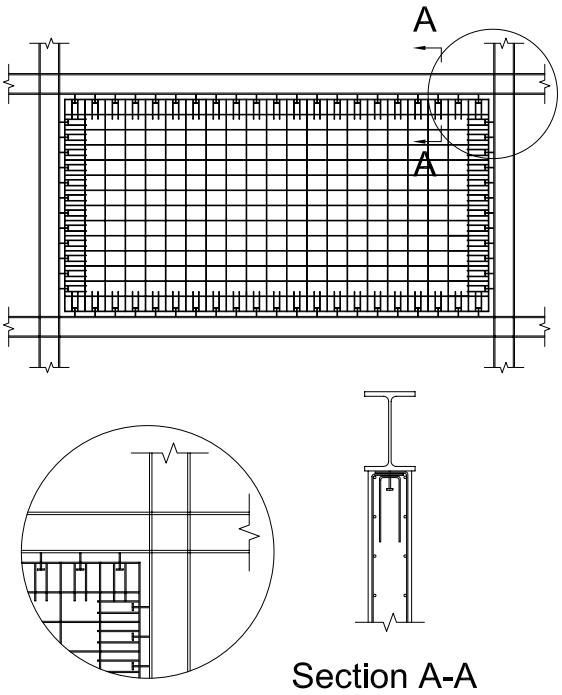

Fig. C-I8.4. Typical reinforcement detailing in a composite wall for steel headed stud anchors subjected to tension.

The use of edge distances in ACI 318 Appendix D to compute the strength of a steel anchor subjected to concrete crushing failure is complex. It is rare in composite construction that there is a nearby edge that is not uniformly supported in a way that prevents the possibility of concrete breakout failure due to a close edge. Thus, for brevity, the provisions in this Specification simplify the assessment of whether it is warranted to check for a concrete failure mode. Additionally, if an edge is supported uniformly, as would be common in composite construction, it is assumed that a concrete failure mode will not occur due to the edge condition. Thus, if these provisions are to be used, it is important that it be deemed by the engineer that a concrete breakout failure mode in shear is directly avoided through having the edges perpendicular to the line of force supported, and the edges parallel to the line of force sufficiently distant that concrete breakout through a side edge is not deemed viable. For loading in shear, the determination of whether breakout failure in the concrete is a viable failure mode for the stud anchor is left to the engineer. Alternatively, the provisions call for required anchor reinforcement with provisions comparable to those of ACI 318 Appendix D, Section D6.2.9 (which in turn refers to Chapter 12 of ACI 318) (ACI, 2008). In addition, the provisions of the applicable building code or ACI 318 Appendix D may be used directly to compute the strength of the steel headed stud anchor.

The steel limit states and resistance factors (and corresponding safety factors) covered in this section match with the corresponding limit states of ACI 318 Appendix D, although they were assessed independently for these provisions. As only steel limit states are required to be checked if there are no edge conditions, experiments that satisfy the minimum height/diameter ratio but that included failure of the steel headed stud anchor either in the steel or in the concrete were included in the assessment of the resistance and safety factors (Pallarés and Hajjar, 2010a, 2010b).

For steel headed stud anchors subjected to tension or combined shear and tension interaction, it is recommended that anchor reinforcement always be included around the stud to mitigate premature failure in the concrete. If the ratio of the diameter of the head of the stud to the shank diameter is too small, the provisions call for use of ACI 318 Appendix D to compute the strength of the steel headed stud anchor. If the distance to the edge of the concrete or the distance to the neighboring anchor is too small, the provisions call for required anchor reinforcement with provisions comparable to those of ACI 318 Appendix D, Section D5.2.9 (which in turn refers to Chapter 12 of ACI 318) (ACI, 2008). Alternatively, the provisions of the applicable building code or ACI 318 Appendix D may be also be used directly to compute the strength of the steel headed stud anchor.

I9. SPECIAL CASES

Tests are required for composite construction that falls outside the limits given in this Specification. Different types of steel anchors may require different spacing and other detailing than steel headed stud and channel anchors.

CHAPTER J
DESIGN OF CONNECTIONS

The provisions of Chapter J cover the design of connections not subject to *cyclic loads*. Wind and other environmental loads are generally not considered to be cyclic loads. The provisions generally apply to connections other than HSS and box members. See Chapter K for HSS and box member connections and Appendix 3 for fatigue provisions.

J1. GENERAL PROVISIONS

1. Design Basis

In the absence of defined design loads, a minimum design load should be considered. Historically, a value of 10 kips (44 kN) for LRFD and 6 kips (27 kN) for ASD have been used as reasonable values. For smaller elements such as lacing, sag rods, girts or similar small members, a load more appropriate to the size and use of the part should be used. Both design requirements and construction loads should be considered when specifying minimum loads for connections.

2. Simple Connections

Simple connections are considered in Sections B3.6a and J1.2. In Section B3.6a, simple connections are defined (with further elaboration in Commentary Section B3.6) in an idealized manner for the purpose of analysis. The assumptions made in the analysis determine the outcome of the analysis that serves as the basis for design (for connections that means the force and deformation demands that the connection must resist). Section J1.2 focuses on the actual proportioning of the connection elements to achieve the required resistance. Thus, Section B3.6a establishes the modeling assumptions that determine the design forces and deformations for use in Section J1.2.

Sections B3.6a and J1.2 are not mutually exclusive. If a "simple" connection is assumed for analysis, the actual connection, as finally designed, must perform consistent with that assumption. A simple connection must be able to meet the required rotation and must not introduce strength and stiffness that significantly alter the rotational response.

3. Moment Connections

Two types of moment connections are defined in Section B3.6b: fully restrained (FR) and partially restrained (PR). FR moment connections must have sufficient strength and stiffness to transfer moment and maintain the angle between connected members. PR moment connections are designed to transfer moments but also allow rotation between connected members as the loads are resisted. The response characteristics of a PR connection must be documented in the technical literature or established by analytical or experimental means. The component elements of a PR

connection must have sufficient strength, stiffness and deformation capacity to satisfy the design assumptions.

4. Compression Members with Bearing Joints

The provisions for "compression members other than columns finished to bear" are intended to account for member out-of-straightness and also to provide a degree of robustness in the structure to resist unintended or accidental lateral loadings that may not have been considered explicitly in the design.

A provision analogous to that in Section J1.4(2)(i), requiring that splice materials and connectors have an available strength of at least 50% of the required compressive strength, has been in the AISC Specifications since 1946. The current Specification clarifies this requirement by stating that the force for proportioning the splice materials and connectors is a tensile force. This avoids uncertainty as to how to handle situations where compression on the connection imposes no force on the connectors.

Proportioning the splice materials and connectors for 50% of the required member strength is simple, but can be very conservative. In Section J1.4(2)(ii), the Specification offers an alternative that addresses directly the design intent of these provisions. The lateral load of 2% of the required compressive strength of the member simulates the effect of a kink at the splice, caused by an end finished slightly out-of-square or other construction condition. Proportioning the connection for the resulting moment and shear also provides a degree of robustness in the structure.

5. Splices in Heavy Sections

Solidified but still hot weld metal contracts significantly as it cools to ambient temperature. Shrinkage of large groove welds between elements that are not free to move so as to accommodate the shrinkage causes strains in the material adjacent to the weld that can exceed the yield point strain. In thick material the weld shrinkage is restrained in the thickness direction, as well as in the width and length directions, causing triaxial stresses to develop that may inhibit the ability to deform in a ductile manner. Under these conditions, the possibility of *brittle fracture* increases.

When splicing hot-rolled shapes with flange thickness exceeding 2 in. (50 mm) or heavy welded built-up members, these potentially harmful weld shrinkage strains can be avoided by using bolted splices, fillet-welded lap splices, or splices that combine a welded and bolted detail (see Figure C-J1.1). Details and techniques that perform well for materials of modest thickness usually must be changed or supplemented by more demanding requirements when welding thick material.

The provisions of AWS D1.1/D1.1M (AWS, 2010) are minimum requirements that apply to most structural welding situations. However, when designing and fabricating welded splices of hot-rolled shapes with flange thicknesses exceeding 2 in. (50 mm) and similar built-up cross sections, special consideration must be given to all aspects of the welded splice detail:

(1) Notch-toughness requirements are required to be specified for tension members; see Commentary Section A3.

(2) Generously sized weld access holes (see Section J1.6) are required to provide increased relief from concentrated weld shrinkage strains, to avoid close juncture of welds in orthogonal directions, and to provide adequate clearance for the exercise of high quality workmanship in hole preparation, welding, and for ease of inspection.
(3) Preheating for thermal cutting is required to minimize the formation of a hard surface layer. (See Section M2.2.)
(4) Grinding of copes and weld access holes to bright metal to remove the hard surface layer is required, along with inspection using magnetic particle or dye-penetrant methods, to verify that transitions are free of notches and cracks.

In addition to tension splices of truss chord members and tension flanges of flexural members, other joints fabricated from heavy sections subject to tension should be given special consideration during design and fabrication.

Alternative details that do not generate shrinkage strains can be used. In connections where the forces transferred approach the member strength, direct welded groove joints may still be the most effective choice.

Earlier editions of this Specification mandated that backing bars and weld tabs be removed from all splices of heavy sections. These requirements were deliberately removed, being judged unnecessary and, in some situations, potentially resulting in more harm than good. The Specification still permits the engineer of record to specify their removal when this is judged appropriate.

The previous requirement for the removal of backing bars necessitated, in some situations, that such operations be performed out-of-position; that is, the welding required to restore the backgouged area had to be applied in the overhead position. This may necessitate difficult equipment for gaining access, different welding equipment, processes and/or procedures, and other practical constraints. When box sections made of plate are spliced, access to the interior side (necessary for backing removal) is typically impossible.

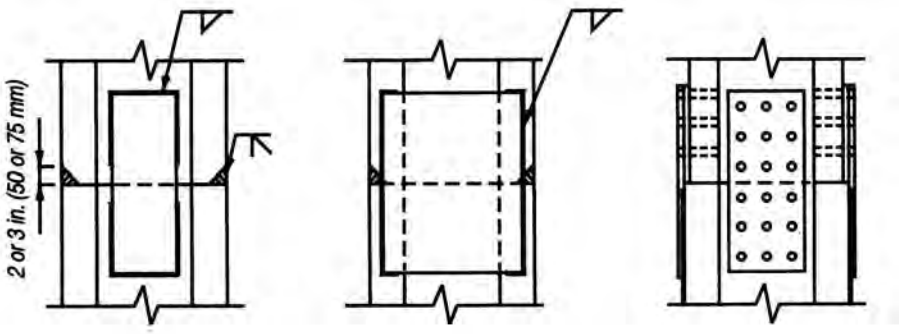

(a) Shear plate welded to web *(b) Shear plate welded to flange tips* *(c) Bolted splice plates*

Fig. C-J1.1. Alternative splices that minimize weld restraint tensile stresses.

Weld tabs that are left in place on splices act as "short attachments" and attract little stress. Even though it is acknowledged that weld tabs might contain regions of inferior quality weld metal, the stress concentration effect is minimized since little stress is conducted through the attachment.

6. Weld Access Holes

Weld access holes are frequently required in the fabrication of structural components. The geometry of these structural details can affect the components' performance. The size and shape of beam copes and weld access holes can have a significant effect on the ease of depositing sound weld metal, the ability to conduct nondestructive examinations, and the magnitude of the stresses at the geometric discontinuities produced by these details.

Weld access holes used to facilitate welding operations are required to have a minimum length from the toe of the weld preparation (see Figure C-J1.2) equal to 1.5 times the thickness of the material in which the hole is made. This minimum length

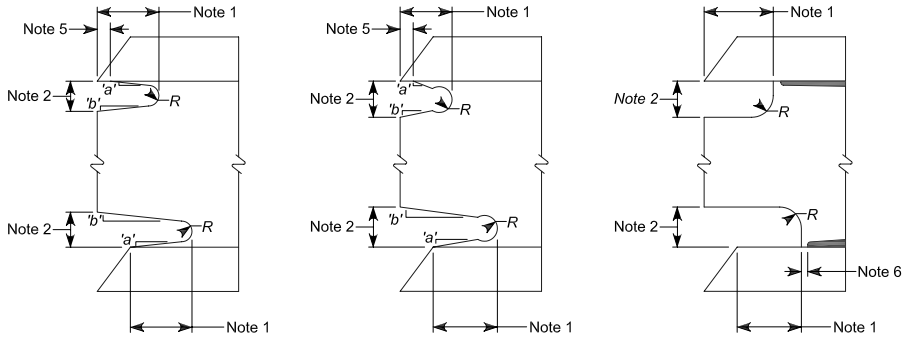

Rolled shapes and built-up shapes assembled prior to cutting the weld access hole.

Built-up shapes assembled after cutting the weld access hole.

Notes: These are typical details for joints welded from one side against steel backing. Alternative details are discussed in the commentary text.

1) Length: Greater of $1.5t_w$ or $1^1/_2$ in. (38 mm)
2) Height: Greater of $1.0t_w$ or $^3/_4$ in. (19 mm) but need not exceed 2 in. (50 mm)
3) *R*: 3/8 in. min. (10 mm). Grind the thermally cut surfaces of weld access holes in heavy shapes as defined in Sections A3.1(c) and (d).
4) Slope *'a'* forms a transition from the web to the flange. Slope *'b'* may be horizontal.
5) The bottom of the top flange is to be contoured to permit the tight fit of backing bars where they are to be used.
6) The web-to-flange weld of built-up members is to be held back a distance of at least the weld size from the edge of the access hole.

Fig. C-J1.2. Weld access hole geometry.

is expected to accommodate a significant amount of the weld shrinkage strains at the web-to-flange intersection.

The height of the weld access hole must provide sufficient clearance for ease of welding and inspection and must be large enough to allow the welder to deposit sound weld metal through and beyond the web. A weld access hole height equal to 1.0 times the thickness of the material with the access hole but not less than $^3/_4$ in. (19 mm) has been judged to satisfy these welding and inspection requirements. The height of the weld access hole need not exceed 2 in. (50 mm).

The geometry of the reentrant corner between the web and the flange determines the level of stress concentration at that location. A 90° reentrant corner having a very small radius produces a very high stress concentration that may lead to rupture of the flange. Consequently, to minimize the stress concentration at this location, the edge of the web is sloped or curved from the surface of the flange to the reentrant surface of the weld access hole.

Stress concentrations along the perimeter of weld access holes also can affect the performance of the joint. Consequently, weld access holes are required to be free of stress raisers such as notches and gouges.

Stress concentrations at web-to-flange intersections of built-up shapes can be decreased by terminating the weld away from the access hole. Thus, for built-up shapes with fillet welds or partial-joint-penetration groove welds that join the web to the flange, the weld access hole may terminate perpendicular to the flange, provided that the weld is terminated a distance equal to or greater than one weld size away from the access hole.

7. Placement of Welds and Bolts

Slight eccentricities between the gravity axis of single and double angle members and the center of gravity of connecting bolts or rivets have long been ignored as having negligible effect on the static strength of such members. Tests have shown

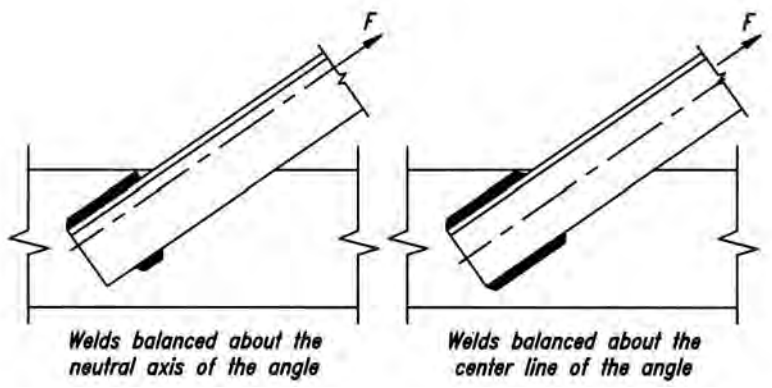

Fig. C-J1.3. Balanced welds

that similar practice is warranted in the case of welded members in statically loaded structures (Gibson and Wake, 1942).

However, the fatigue life of eccentrically loaded welded angles has been shown to be very short (Klöppel and Seeger, 1964). Notches at the roots of fillet welds are harmful when alternating tensile stresses are normal to the axis of the weld, as could occur due to bending when axial cyclic loading is applied to angles with end welds not balanced about the neutral axis. Accordingly, balanced welds are required when such members are subjected to cyclic loading (see Figure C-J1.3).

8. Bolts in Combination with Welds

As in previous editions, this Specification does not permit bolts to share the load with welds except for bolts in shear connections. The conditions for load sharing have, however, changed substantially based on recent research (Kulak and Grondin, 2003). For shear-resisting connections with longitudinally loaded fillet welds, load sharing between the longitudinal welds and bolts in standard holes or short-slotted holes transverse to the direction of the load is permitted, but the contribution of the bolts is limited to 50% of the available strength of the equivalent bearing-type connection. Both ASTM A307 and high-strength bolts are permitted. The heat of welding near bolts will not alter the mechanical properties of the bolts.

In making alterations to existing structures, the use of welding to resist loads other than those produced by existing dead load present at the time of making the alteration is permitted for riveted connections and high-strength bolted connections if the bolts are pretensioned to the levels in Tables J3.1 or J3.1M prior to welding.

The restrictions on bolts in combination with welds do not apply to typical bolted/welded beam-to-girder and beam-to-column connections and other comparable connections (Kulak et al., 1987).

9. High-Strength Bolts in Combination with Rivets

When high-strength bolts are used in combination with rivets, the ductility of the rivets permits the direct addition of the strengths of the two fastener types.

10. Limitations on Bolted and Welded Connections

Pretensioned bolts, slip-critical bolted connections, or welds are required whenever connection slip can be detrimental to the performance of the structure or there is a possibility that nuts will back off. Snug-tightened high-strength bolts are recommended for all other connections.

J2. WELDS

Selection of weld type [complete-joint-penetration (CJP) groove weld versus fillet versus partial-joint-penetration (PJP) groove weld] depends on base connection geometry (butt versus T or corner), in addition to required strength, and other issues discussed below. Notch effects and the ability to evaluate with nondestructive testing may affect joint selection for cyclically loaded joints or joints expected to deform plastically.

1. Groove Welds

1a. Effective Area

Tables J2.1 and J2.2 show that the effective throat of partial-joint-penetration and flare groove welds is dependent upon the weld process and the position of the weld. It is recommended that the design drawings should show either the required strength or the required effective throat size and allow the fabricator to select the process and determine the position required to meet the specified requirements. Effective throats larger than those in Table J2.2 can be qualified by tests. Weld reinforcement is not used in determining the effective throat of a groove weld but reinforcing fillets on T and corner joints are accounted for in the effective throat. See AWS D1.1/D1.1M Annex A (AWS, 2010).

1b. Limitations

Table J2.3 gives the minimum effective throat thickness of a PJP groove weld. Notice that for PJP groove welds Table J2.3 goes up to a plate thickness of over 6 in. (150 mm) and a minimum weld throat of $^5/_8$ in. (16 mm), whereas for fillet welds Table J2.4 goes up to a plate thickness of over $^3/_4$ in. (19 mm) and a minimum leg size of fillet weld of only $^5/_{16}$ in. (8 mm). The additional thickness for PJP groove welds is intended to provide for reasonable proportionality between weld and material thickness. The use of single-sided PJP groove welds in joints subject to rotation about the toe of the weld is discouraged.

2. Fillet Welds

2a. Effective Area

The effective throat of a fillet weld does not include the weld reinforcement, nor any penetration beyond the weld root. Some welding procedures produce a consistent penetration beyond the root of the weld. This penetration contributes to the strength of the weld. However, it is necessary to demonstrate that the weld procedure to be used produces this increased penetration. In practice, this can be done initially by cross-sectioning the runoff plates of the joint. Once this is done, no further testing is required, as long as the welding procedure is not changed.

2b. Limitations

Table J2.4 provides the minimum size of a fillet weld for a given thickness of the thinner part joined. The requirements are not based on strength considerations, but on the quench effect of thick material on small welds. Very rapid cooling of weld metal may result in a loss of ductility. Furthermore, the restraint to weld metal shrinkage provided by thick material may result in weld cracking.

The use of the thinner part to determine the minimum size weld is based on the prevalence of the use of filler metal considered to be "low hydrogen." Because a $^5/_{16}$-in. (8 mm) fillet weld is the largest that can be deposited in a single pass by the SMAW process and still be considered prequalified under AWS D1.1/D1.1M, $^5/_{16}$ in. (8 mm) applies to all material greater than $^3/_4$ in. (19 mm) in thickness, but

minimum preheat and interpass temperatures are required by AWS D1.1/D1.1M. The design drawings should reflect these minimum sizes, and the production welds should be of these minimum sizes.

For thicker members in lap joints, it is possible for the welder to melt away the upper corner, resulting in a weld that appears to be full size but actually lacks the required weld throat dimension. See Figure C-J2.1(a). On thinner members, the full weld throat is likely to be achieved, even if the edge is melted away. Accordingly, when the plate is $^1/_4$ in. (6 mm) or thicker, the maximum fillet weld size is $^1/_{16}$ in. (2 mm) less than the plate thickness, *t*, which is sufficient to ensure that the edge remains. See Figure C-J2.1(b).

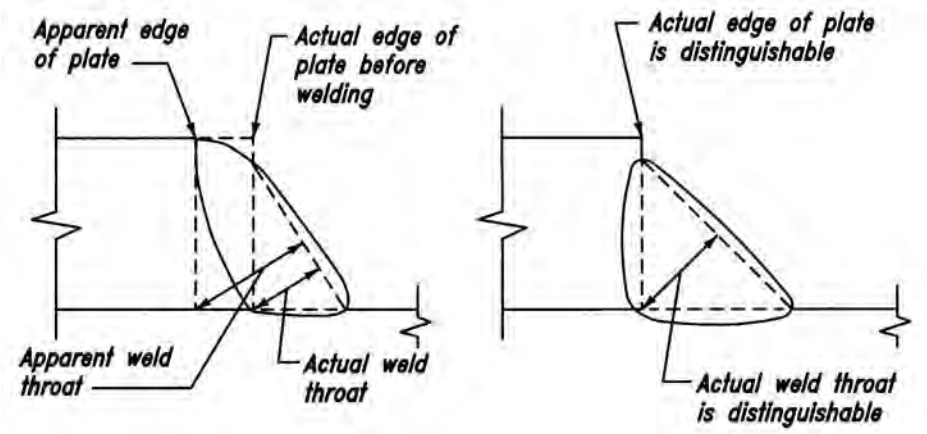

(a) Incorrect for t ≥ $^1/_4$ *in.* *(b) Correct for* t ≥ $^1/_4$ *in.*

Fig. C-J2.1. Identification of plate edge.

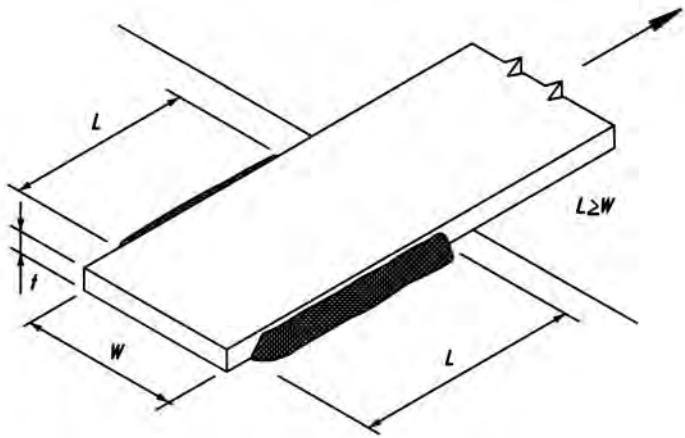

Fig. C-J2.2. Longitudinal fillet welds.

Where longitudinal fillet welds are used alone in a connection (see Figure C-J2.2), Section J2.2b requires that the length of each weld be at least equal to the width of the connecting material because of shear lag (Freeman, 1930).

By providing a minimum lap of five times the thickness of the thinner part of a lap joint, the resulting rotation of the joint when pulled will not be excessive, as shown in Figure C-J2.3. Fillet welded lap joints under tension tend to open and apply a tearing action at the root of the weld as shown in Figure C-J2.4(b), unless restrained by a force, *F*, as shown in Figure C-J2.4(a). The minimum length reduces stresses due to Poisson effects.

The use of single-sided fillet welds in joints subject to rotation around the toe of the weld is discouraged. End returns are not essential for developing the full length of fillet welded connections and have a negligible effect on their strength. Their use has been encouraged to ensure that the weld size is maintained over the length of the weld, to enhance the fatigue resistance of cyclically loaded flexible end connections, and to increase the plastic deformation capability of such connections.

The weld strength database on which the specifications were developed had no end returns. This includes the study reported in Higgins and Preece (1968), the seat angle tests in Lyse and Schreiner (1935), the seat and top angle tests in Lyse and Gibson (1937), the tests on beam webs welded directly to a column or girder by fillet welds in Johnston and Deits (1942), and the tests on eccentrically loaded welded connections reported by Butler et al. (1972). Hence, the current strength values and joint design models do not require end returns when the required weld size is provided. Johnston and Green (1940) noted that movement consistent with the design assumption of no end restraint (in other words, joint flexibility) was enhanced without end returns. They also verified that greater plastic deformation of the connection was achieved when end returns existed, although the strength was not significantly different.

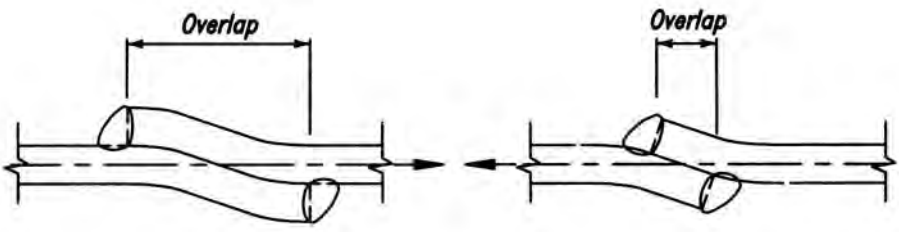

Fig. C-J2.3. Minimum lap.

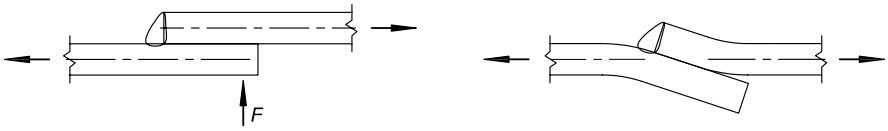

(a) Restrained *(b) Unrestrained*

Fig. C-J2.4. Restraint of lap joints.

When longitudinal fillet welds parallel to the stress are used to transmit the load to the end of an axially loaded member, the welds are termed "end loaded." Typical examples of such welds include, but are not limited to (a) longitudinally welded lap joints at the end of axially loaded members, (b) welds attaching bearing stiffeners, and (c) similar cases. Typical examples of longitudinally loaded fillet welds that are not considered end loaded include, but are not limited to (a) welds that connect plates or shapes to form built-up cross sections in which the shear force is applied to each increment of length of weld depending upon the distribution of the shear along the length of the member, and (b) welds attaching beam web connection angles and shear plates because the flow of shear force from the beam or girder web to the weld is essentially uniform throughout the weld length; that is, the weld is not end-loaded despite the fact that it is loaded parallel to the weld axis. Neither does the reduction coefficient, β, apply to welds attaching stiffeners to webs because the stiffeners and welds are not subject to calculated axial stress but merely serve to keep the web flat.

The distribution of stress along the length of end-loaded fillet welds is not uniform and is dependent upon complex relationships between the stiffness of the longitudinal fillet weld relative to the stiffness of the connected materials. Experience has shown that when the length of the weld is equal to approximately 100 times the weld size or less, it is reasonable to assume that the full length is effective. For weld lengths greater than 100 times the weld size, the effective length should be taken less than the actual length. The reduction factor, β, provided in Section J2.2b is the equivalent to that given in CEN (2005), which is a simplified approximation of exponential formulas developed by finite element studies and tests performed in Europe over many years. The provision is based on the combined consideration of the nominal strength for fillet welds with leg size less than $^1/_4$ in. (6 mm) and of a judgment-based serviceability limit of slightly less than $^1/_{32}$ in. (1 mm) displacement at the end of the weld for welds with leg size $^1/_4$ in. (6 mm) and larger. Given the empirically derived mathematical form of the β factor, as the ratio of weld length to weld size, w, increases beyond 300, the effective length of the weld begins to decrease, illogically causing a weld of greater length to have progressively less strength. Therefore, the effective length is taken as $0.6(300)w = 180w$ when the weld length is greater than 300 times the leg size.

In most cases, fillet weld terminations do not affect the strength or serviceability of connections. However, in certain cases the disposition of welds affect the planned function of the connection, and notches may affect the static strength and/or the resistance to crack initiation if cyclic loads of sufficient magnitude and frequency occur. For these cases, termination details at the end of the joint are specified to provide the desired profile and performance. In cases where profile and notches are less critical, terminations are permitted to be run to the end. In most cases, stopping the weld short of the end of the joint will not reduce the strength of the weld. The small loss of weld area due to stopping the weld short of the end of the joint by one to two weld sizes is not typically considered in the calculation of weld strength. Only short weld lengths will be significantly affected by this.

The following situations require special attention:

(1) For lapped joints where one part extends beyond the end or edge of the part to which it is welded and if the parts are subject to calculated tensile stress at the start of the overlap, it is important that the weld terminate a short distance from the stressed edge. For one typical example, the lap joint between the tee chord and the web members of a truss, the weld should not extend to the edge of the tee stem (see Figure C-J2.5). The best technique to avoid inadvertent notches at this critical location is to strike the welding arc at a point slightly back from the edge and proceed with welding in the direction away from the edge (see Figure C-J2.6). Where framing angles extend beyond the end of the beam web to which they are welded, the free end of the beam web is subject to zero stress; thus, it is permissible for the fillet weld to extend continuously across the top end, along the side and along the bottom end of the angle to the extreme end of the beam (see Figure C-J2.7).

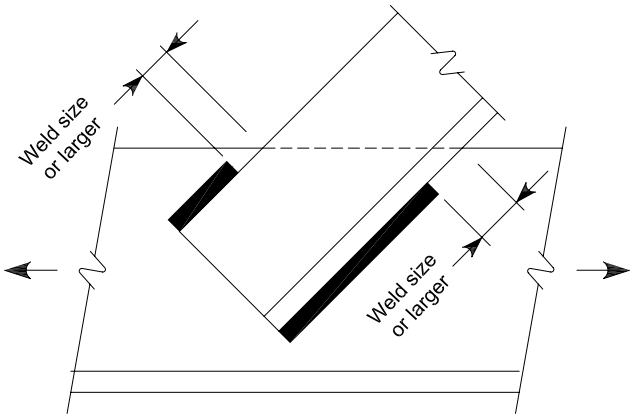

Fig. C-J2.5. Fillet welds near tension edges.

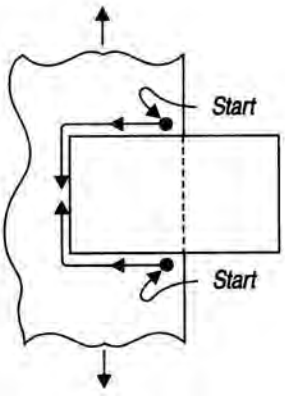

Fig. C-J2.6. Suggested direction of welding travel to avoid notches.

(2) For connections such as framing angles and framing tees, which are assumed in the design of the structure to be *flexible connections*, the tension edges of the outstanding legs or flanges must be left unwelded over a substantial portion of their length to provide flexibility in the connection. Tests have shown that the static strength of the connection is the same with or without end returns; therefore, the use of returns is optional, but if used, their length must be restricted to not more than four times the weld size (Johnston and Green, 1940) (see Figure C-J2.8).

(3) Experience has shown that when ends of intermediate transverse stiffeners on the webs of plate girders are not welded to the flanges (the usual practice), small torsional distortions of the flange occur near shipping bearing points in the normal course of shipping by rail or truck and may cause high out-of-plane bending stresses (up to the yield point) and fatigue cracking at the toe of the web-to-flange welds. This has been observed even with closely fitted stiffeners. The intensity of these out-of-plane stresses may be effectively limited and cracking prevented if "breathing room" is provided by terminating the stiffener weld away from the web-to-flange welds. The unwelded distance should not exceed six times the web thickness so that column buckling of the web within the unwelded length does not occur.

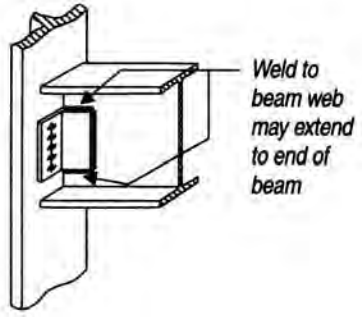

Fig. C-J2.7. Fillet weld details on framing angles.

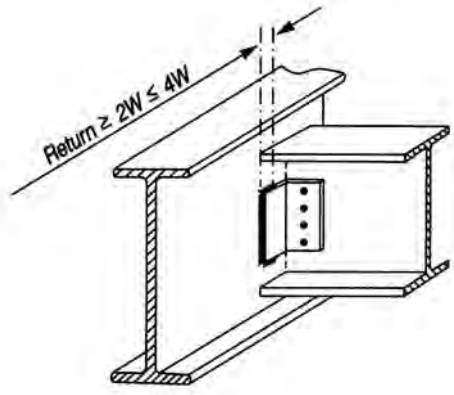

Fig. C-J2.8. Flexible connection returns optional unless subject to fatigue.

(4) For fillet welds that occur on opposite sides of a common plane, it is difficult to deposit a weld continuously around the corner from one side to the other without causing a gouge in the corner of the parts joined; therefore, the welds must be interrupted at the corner (see Figure C-J2.9).

3. Plug and Slot Welds

A plug weld is a weld made in a circular hole in one member of a joint fusing that member to another member. A slot weld is a weld made in an elongated hole in one member of a joint fusing that member to another member. Both plug and slot welds are only applied to lap joints. Care should be taken when plug or slot welds are applied to structures subject to cyclic loading as the fatigue performance of these welds is limited.

A fillet weld inside a hole or slot is not a plug weld. A "puddle weld," typically used for joining decking to the supporting steel, is not the same as a plug weld.

3a. Effective Area

When plug and slot welds are detailed in accordance with Section J2.3b, the strength of the weld is controlled by the size of the fused area between the weld and the base metal. The total area of the hole or slot is used to determine the effective area.

3b. Limitations

Plug and slot welds are limited to situations where they are loaded in shear, or where they are used to prevent elements of a cross section from buckling, such as for web doubler plates on deeper rolled sections. Plug and slot welds are only allowed where the applied loads result in shear between the joined materials—they are not to be used to resist direct tensile loads. This restriction does not apply to fillets in holes or slots.

The geometric limitations on hole and slot sizes are prescribed in order to provide a geometry that is conducive to good fusion. Deep, narrow slots and holes make it difficult for the welder to gain access and see the bottom of the cavity into which weld

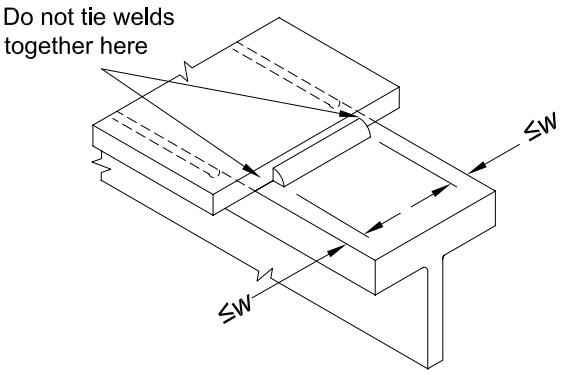

Fig. C-J2.9. Details for fillet welds that occur on opposite sides of a common plane.

metal must be placed. Where access is difficult, fusion may be limited, and the strength of the connection reduced.

4. Strength

The strength of welds is governed by the strength of either the base material or the deposited weld metal. Table J2.5 presents the nominal weld strengths and the ϕ and Ω factors, as well as the limitations on filler metal strength levels.

The strength of a joint that contains a complete-joint-penetration (CJP) groove weld, whether loaded in tension or compression, is dependent upon the strength of the base metal, and no computation of the strength of the CJP groove weld is required. For tension applications, matching strength filler metal is required, as defined in AWS D1.1/D1.1M Table 3.1. For compression applications, up to a 10 ksi (70 MPa) decrease in filler metal strength is permitted, which is equivalent to one strength level.

CJP groove welds loaded in tension or compression parallel to the weld axis, such as for the groove welded corners of box columns, do not transfer primary loads across the joint. In cases such as this, no computation of the strength of the CJP groove weld strength is required.

CJP groove welded tension joints are intended to provide strength equivalent to the base metal, therefore matching filler metal is required. CJP groove welds have been shown not to exhibit compression failure even when they are undermatched. The amount of undermatching before unacceptable deformation occurs has not been established, but one standard strength level is conservative and therefore permitted. Joints in which the weld strength is calculated based on filler metal classification strength can be designed using any filler metal strength equal to or less than matching. Filler metal selection is still subject to compliance with AWS D1.1/D1.1M.

The nominal strength of partial-joint-penetration (PJP) groove welded joints in compression is higher than for other joints because compression limit states are not observed on weld metal until significantly above the yield strength.

Connections that contain PJP groove welds designed to bear in accordance with Section J1.4(2), and where the connection is loaded in compression, are not limited in strength by the weld since the surrounding base metal can transfer compression loads. When not designed in accordance with Section J1.4(2), an otherwise similar connection must be designed considering the possibility that either the weld or the base metal may be the critical component in the connection.

The factor of 0.6 on F_{EXX} for the tensile strength of PJP groove welds is an arbitrary reduction that has been used since the early 1960s to compensate for the notch effect of the unfused area of the joint, uncertain quality in the root of the weld due to the inability to perform nondestructive evaluation, and the lack of a specific notch-toughness requirement for filler metal. It does not imply that the tensile failure mode is by shear stress on the effective throat, as in fillet welds.

Column splices have historically been connected with relatively small PJP groove welds. Frequently, erection aids are available to resist construction loads. Columns are

intended to be in bearing in splices and on base plates. Section M4.4 recognizes that, in the as-fitted product, the contact may not be consistent across the joint and therefore provides rules assuring some contact that limits the potential deformation of weld metal and the material surrounding it. These welds are intended to hold the columns in place, not to transfer the compressive loads. Additionally, the effects of very small deformation in column splices are accommodated by normal construction practices. Similarly, the requirements for base plates and normal construction practice assure some bearing at bases. Therefore the compressive stress in the weld metal does not need to be considered as the weld metal will deform and subsequently stop when the columns bear.

Other PJP groove welded joints connect members that may be subject to unanticipated loads and may fit with a gap. Where these connections are finished to bear, fit-up may not be as good as that specified in Section M4.4 but some bearing is anticipated and the weld is designed to resist loads defined in Section J1.4(2) using the factors, strengths and effective areas in Table J2.5. Where the joints connect members that are not finished to bear, the welds are designed for the total load using the available strengths and areas in Table J2.5.

In Table J2.5, the nominal strength of fillet welds is determined from the effective throat area, whereas the strengths of the connected parts are governed by their respective thicknesses. Figure C-J2.10 illustrates the shear planes for fillet welds and base material:

(1) Plane 1-1, in which the strength is governed by the shear strength of the material A
(2) Plane 2-2, in which the strength is governed by the shear strength of the weld metal
(3) Plane 3-3, in which the strength is governed by the shear strength of the material B

The strength of the welded joint is the lowest of the strengths calculated in each plane of shear transfer. Note that planes 1-1 and 3-3 are positioned away from the fusion areas between the weld and the base material. Tests have demonstrated that the stress on this fusion area is not critical in determining the shear strength of fillet welds (Preece, 1968).

The shear planes for plug and PJP groove welds are shown in Figure C-J2.11 for the weld and base metal. Generally the base metal will govern the shear strength.

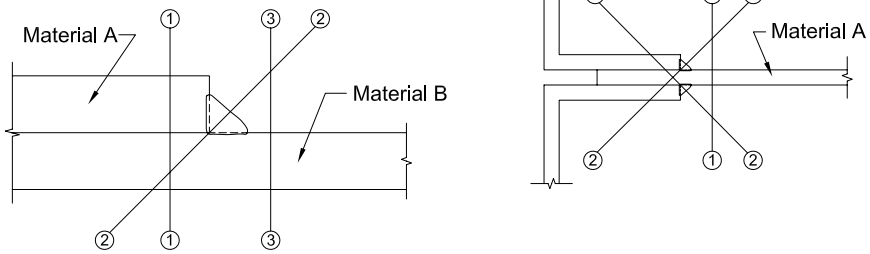

Fig. C-J2.10. Shear planes for fillet welds loaded in longitudinal shear.

When weld groups are loaded in shear by an external load that does not act through the center of gravity of the group, the load is eccentric and will tend to cause a relative rotation and translation between the parts connected by the weld. The point about which rotation tends to take place is called the instantaneous center of rotation. Its location is dependent upon the load eccentricity, geometry of the weld group, and deformation of the weld at different angles of the resultant elemental force relative to the weld axis.

The individual strength of each unit weld element can be assumed to act on a line perpendicular to a ray passing through the instantaneous center and that element's location (see Figure C-J2.12).

The ultimate shear strength of weld groups can be obtained from the load deformation relationship of a single-unit weld element. This relationship was originally given by Butler et al. (1972) for E60 (E43) electrodes. Curves for E70 (E48) electrodes were reported in Lesik and Kennedy (1990).

Unlike the load-deformation relationship for bolts, strength and deformation performance in welds are dependent on the angle that the resultant elemental force makes with the axis of the weld element as shown in Figure C-J2.12. The actual load deformation relationship for welds is given in Figure C-J2.13, taken from Lesik and Kennedy (1990). Conversion of the SI equation to U.S. customary units results in the following weld strength equation for R_n:

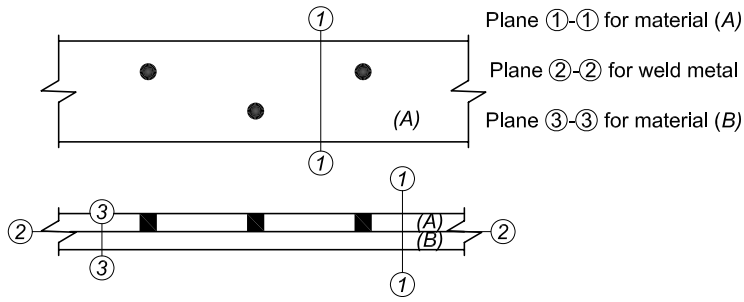

(a) Plug welds

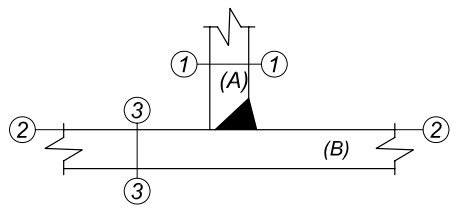

(b) Partial-joint-penetration groove welds

Fig. C-J2.11. Shear planes for plug and partial-joint-penetration groove welds.

$$R_n = 0.852\left(1.0 + 0.50\sin^{1.5}\theta\right)F_{EXX}A_w \qquad \text{(C-J2-1)}$$

Because the maximum strength is limited to $0.60F_{EXX}$ for longitudinally loaded welds ($\theta = 0^o$), the Specification provision provides, in the reduced equation coefficient, a reasonable margin for any variation in welding techniques and procedures. To eliminate possible computational difficulties, the maximum deformation in the weld elements is limited to $0.17w$. For design convenience, a simple elliptical formula is used for $f(p)$ to closely approximate the empirically derived polynomial in

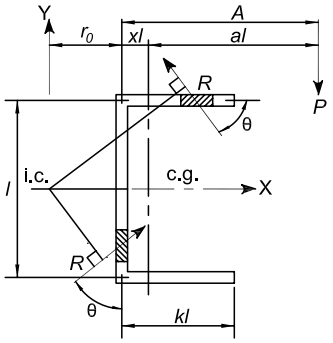

Fig. C-J2.12. Weld element nomenclature.

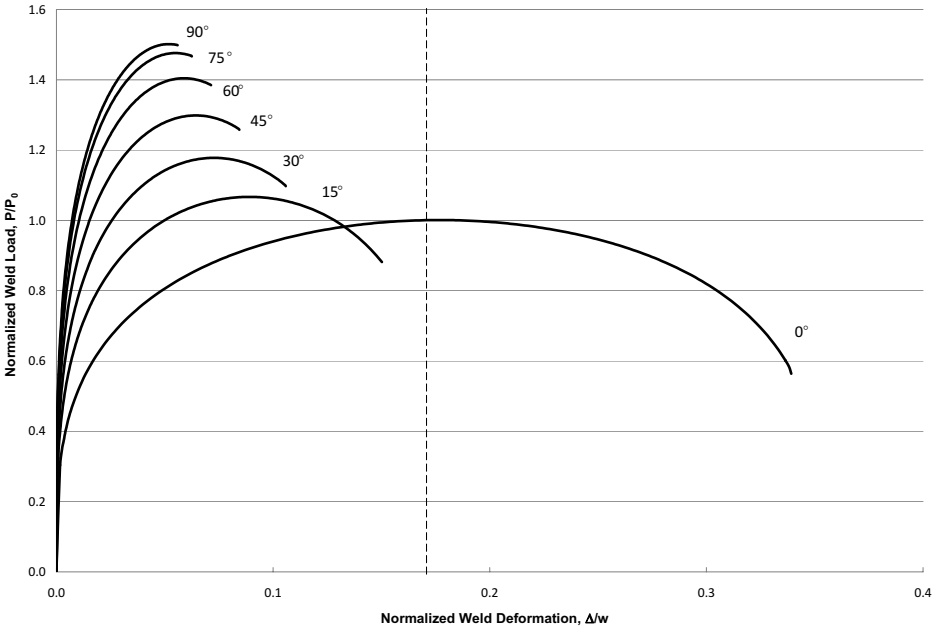

Fig. C-J2.13. Load deformation relationship.

Lesik and Kennedy (1990). Previous to 2010, the increase in fillet weld strength was restricted to weld groups loaded in the plane of the weld group elements. Testing by Gomez et al. (2008) indicated that the strength increase defined in Equation J2-5 does not have to be restricted to loads in-plane.

The total strength of all the weld elements combine to resist the eccentric load and, when the correct location of the instantaneous center has been selected, the three in-plane equations of statics ($\Sigma F_x = 0, \Sigma F_y = 0, \Sigma M = 0$) will be satisfied. Numerical techniques, such as those given in Brandt (1982), have been developed to locate the instantaneous center of rotation subject to convergent tolerances.

5. Combination of Welds

When determining the strength of a combination PJP groove weld and fillet weld contained within the same joint, the total throat dimension is not the simple addition of the fillet weld throat and the groove weld throat. In such cases, the resultant throat of the combined weld (shortest dimension from the root to face of the final weld) must be determined and the design based upon this dimension.

6. Filler Metal Requirements

Applied and residual stresses and geometrical discontinuities from backing bars with associated notch effects contribute to sensitivity to fracture. Additionally, some weld metals in combination with certain procedures result in welds with low notch toughness. Accordingly, this Specification requires a minimum specified toughness for weld metals in those joints that are subject to more significant applied stresses and toughness demands. The level of toughness required is selected as one level more conservative than the base metal requirement for hot-rolled shapes with a flange thickness exceeding 2 in. (50 mm).

7. Mixed Weld Metal

Problems can occur when incompatible weld metals are used in combination and notch-tough composite weld metal is required. For instance, tack welds deposited using a self-shielded process with aluminum deoxidizers in the electrodes and subsequently covered by SAW weld passes can result in a composite weld metal with low notch-toughness, despite the fact that each process by itself could provide notch-tough weld metal.

Potential concern about intermixing weld metal types is limited to situations where one of the two weld metals is deposited by the self-shielded flux-cored arc welding (FCAW-s) process. Changes in tensile and elongation properties have been demonstrated to be of insignificant consequence. Notch toughness is the property that can be affected the most. Many compatible combinations of FCAW-s and other processes are commercially available.

J3. BOLTS AND THREADED PARTS

1. High-Strength Bolts

In general, except as provided in this Specification, the use of high-strength bolts is required to conform to the provisions of the *Specification for Structural Joints*

Using High-Strength Bolts (RCSC, 2009) as approved by the Research Council on Structural Connections. Kulak (2002) provides an overview of the properties and use of high-strength bolts.

Occasionally the need arises for the use of high-strength bolts of diameters in excess of those permitted for ASTM A325 or A325M and ASTM A490 or A490M bolts (or lengths exceeding those available in these grades). For joints requiring diameters in excess of 1½ in. (38 mm) or lengths in excess of about 8 in. (200 mm), Section J3.1 permits the use of ASTM A449 bolts and ASTM A354 Grade BC and BD threaded rods. Note that anchor rods are more preferably specified as ASTM F1554 material.

High-strength bolts have been grouped by strength levels into two categories:

Group A bolts which have a strength similar to ASTM A325 bolts
Group B bolts which have a strength similar to ASTM A490 bolts

Snug-tightened installation is the most economical installation procedure and is permitted for bolts in bearing type connections except where pretensioning is required in the Specification. Only Group A bolts in tension or combined shear and tension and Group B bolts in shear, where loosening or fatigue are not design considerations, are permitted to be installed snug tight. Two studies have been conducted to investigate possible reductions in strength because of varying levels of pretension in bolts within the same connection. The studies found that no significant loss of strength resulted from having different pretensions in bolts within the same connection, even with ASTM A490 fasteners. See Commentary Section J3.6 for more details.

There are no specified minimum or maximum pretensions for snug-tight installation of bolts. The only requirement is that the bolts bring the plies into firm contact. Depending on the thickness of material and the possible distortion due to welding, portions of the connection may not be in contact.

There are practical cases in the design of structures where slip of the connection is desirable to allow for expansion and contraction of a joint in a controlled manner. Regardless of whether force transfer is required in the direction normal to the slip direction, the nuts should be hand-tightened with a spud wrench and then backed off one-quarter turn. Furthermore, it is advisable to deform the bolt threads or use a locking nut or jamb nut to ensure that the nut does not back off further under service conditions. Thread deformation is commonly accomplished with a cold chisel and hammer applied at one location. Note that tack-welding of the nut to the bolt threads is not recommended.

2. Size and Use of Holes

Standard holes or *short slotted holes* transverse to the direction of load are now permitted for all applications complying with the requirements of this Specification. In addition, to provide some latitude for adjustment in plumbing a frame during erection, three types of enlarged holes are permitted, subject to the approval of the designer. The nominal maximum sizes of these holes are given in Table J3.3 or J3.3M. The use of these enlarged holes is restricted to connections assembled with high-strength bolts and is subject to the provisions of Sections J3.3 and J3.4.

3. Minimum Spacing

The minimum spacing dimensions of $2^2/_3$ times and 3 times the nominal diameter are to facilitate construction and do not necessarily satisfy the bearing and tearout strength requirements in Section J3.10.

4. Minimum Edge Distance

In previous editions of the Specification, separate minimum edge distances were given in Tables J3.4 and J3.4M for sheared edges and for rolled or thermally cut edges. Sections J3.10 and J4 are used to prevent exceeding bearing and tearout limits, are suitable for use with both thermally cut, sawed and sheared edges, and must be met for all bolt holes. Accordingly, the edge distances in Tables J3.4 and J3.4M are workmanship standards and are no longer dependent on edge condition or fabrication method.

5. Maximum Spacing and Edge Distance

Limiting the edge distance to not more than 12 times the thickness of an outside connected part, but not more than 6 in. (150 mm), is intended to provide for the exclusion of moisture in the event of paint failure, thus preventing corrosion between the parts that might accumulate and force these parts to separate. More restrictive limitations are required for connected parts of unpainted weathering steel exposed to atmospheric corrosion.

The longitudinal spacing applies only to elements consisting of a shape and a plate or two plates. For elements such as back-to-back angles not subject to corrosion, the longitudinal spacing may be as required for structural requirements.

6. Tension and Shear Strength of Bolts and Threaded Parts

Tension loading of fasteners is usually accompanied by some bending due to the deformation of the connected parts. Hence, the resistance factor, ϕ, and the safety factor, Ω, are relatively conservative. The nominal tensile strength values in Table J3.2 were obtained from the equation

$$F_{nt} = 0.75F_u \qquad \text{(C-J3-2)}$$

The factor of 0.75 included in this equation accounts for the approximate ratio of the effective tension area of the threaded portion of the bolt to the area of the shank of the bolt for common sizes. Thus A_b is defined as the area of the unthreaded body of the bolt and the value reported for F_{nt} in Table J3.2 is calculated as $0.75F_u$.

The tensile strength given by Equation C-J3-2 is independent of whether the bolt was initially installed pretensioned or snug-tightened. Tests confirm that the performance of ASTM A325 and A325M bolts in tension not subjected to fatigue are unaffected by the original installation condition (Amrine and Swanson, 2004; Johnson, 1996; Murray et al., 1992). While the equation was developed for bolted connections, it was also conservatively applied to threaded parts (Kulak et al., 1987).

For ASTM A325 or A325M bolts, no distinction is made between small and large diameters, even though the minimum tensile strength, F_u, is lower for bolts with

diameters in excess of 1 in. (25 mm). Such a refinement is not justified, particularly in view of the conservative resistance factor, ϕ, and safety factor, Ω, the increasing ratio of tensile area to gross area, and other compensating factors.

The values of nominal shear strength in Table J3.2 were obtained from the following equations rounded to the nearest whole ksi:

(a) When threads are excluded from the shear planes

$$F_{nv} = 0.563F_u \tag{C-J3-3}$$

(b) When threads are not excluded from the shear plane

$$F_{nv} = 0.450F_u \tag{C-J3-4}$$

The factor 0.563 accounts for the effect of a shear/tension ratio of 0.625 and a 0.90 length reduction factor. The factor of 0.450 is 80% of 0.563, which accounts for the reduced area of the threaded portion of the fastener when the threads are not excluded from the shear plane. The initial reduction factor of 0.90 is imposed on connections with lengths up to and including 38 in. (965 mm). The resistance factor, ϕ, and the safety factor, Ω, for shear in bearing-type connections in combination with the initial 0.90 factor accommodate the effects of differential strain and second-order effects in connections less than or equal to 38 in. (965 mm) in length.

In connections consisting of only a few fasteners and length not exceeding approximately 16 in. (406 mm), the effect of differential strain on the shear in bearing fasteners is negligible (Kulak et al., 1987; Fisher et al., 1978; Tide, 2010). In longer tension and compression joints, the differential strain produces an uneven distribution of load between fasteners, those near the end taking a disproportionate part of the total load, so that the maximum strength per fastener is reduced. This Specification does not limit the length but requires that the initial 0.90 factor be replaced by 0.75 when determining bolt shear strength for connections longer than 38 in. (965 mm). In lieu of another column of design values, the appropriate values are obtained by multiplying the tabulated values by 0.75/0.90 = 0.833.

The ongoing discussion is primarily applicable to end-loaded tension and compression connections, but for connection lengths less than or equal to 38 in. (965 mm) it is applied to all connections to maintain simplicity. For shear type connections used in beams and girders, with lengths greater than 38 in. (965 mm), there is no need to make the second reduction. Examples of end-loaded and non-end-loaded connections are shown in Figure C-J3.1.

When determining the shear strength of a fastener, the area, A_b, is multiplied by the number of shear planes. While developed for bolted connections, the equations were also conservatively applied to threaded parts. The value given for ASTM A307 bolts was obtained from Equation C-J3-4 but is specified for all cases regardless of the position of threads.

Additional information regarding the development of the provisions in this section can be found in the Commentary to the RCSC *Specification* (RCSC, 2009).

In Table J3.2, footnote c, the specified reduction of 1% for each $^1/_{16}$ in. over 5 diameters for ASTM A307 bolts is a carryover from the reduction that was specified for long rivets. Because the material strengths are similar, it was decided a similar reduction was appropriate.

7. Combined Tension and Shear in Bearing-Type Connections

Tests have shown that the strength of bearing fasteners subject to combined shear and tension resulting from externally applied forces can be closely defined by an ellipse (Kulak et al., 1987). The relationship is expressed as:

For design according to Section B3.3 (LRFD):

$$\left(\frac{f_t}{\phi F_{nt}}\right)^2 + \left(\frac{f_v}{\phi F_{nv}}\right)^2 = 1 \qquad \text{(C-J3-5a)}$$

For design according to Section B3.4 (ASD):

$$\left(\frac{\Omega f_t}{F_{nt}}\right)^2 + \left(\frac{\Omega f_v}{F_{nv}}\right)^2 = 1 \qquad \text{(C-J3-5b)}$$

where

f_v = required shear stress, ksi (MPa)
f_t = required tensile stress, ksi (MPa)

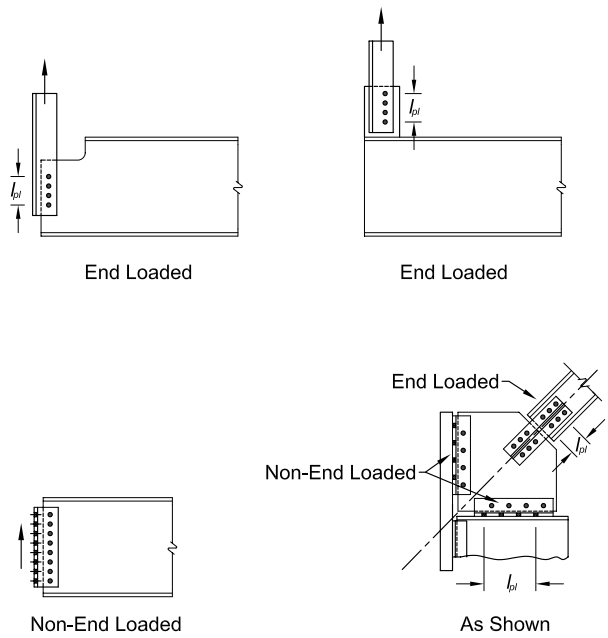

Fig. C-J3.1. End loaded and non-end-loaded connection examples; l_{pl} = fastener pattern length.

F_{nv} = nominal shear stress, ksi (MPa)
F_{nt} = nominal tensile stress, ksi (MPa)

The elliptical relationship can be replaced, with only minor deviations, by three straight lines as shown in Figure C-J3.2. The sloped portion of the straight-line representation follows.

For design according to Section B3.3 (LRFD):

$$\left(\frac{f_t}{\phi F_{nt}}\right)+\left(\frac{f_v}{\phi F_{nv}}\right)=1.3 \qquad \text{(C-J3-6a)}$$

For design according to Section B3.4 (ASD):

$$\left(\frac{\Omega f_t}{F_{nt}}\right)+\left(\frac{\Omega f_v}{F_{nv}}\right)=1.3 \qquad \text{(C-J3-6b)}$$

which results in Equations J3-3a and J3-3b (Carter et al., 1997).

This latter representation offers the advantage that no modification of either type of stress is required in the presence of fairly large magnitudes of the other type. Note that Equations J3-3a and J3-3b can be rewritten so as to find the nominal shear strength per unit area, F_{nv}', as a function of the required tensile stress, f_t. These formulations are:

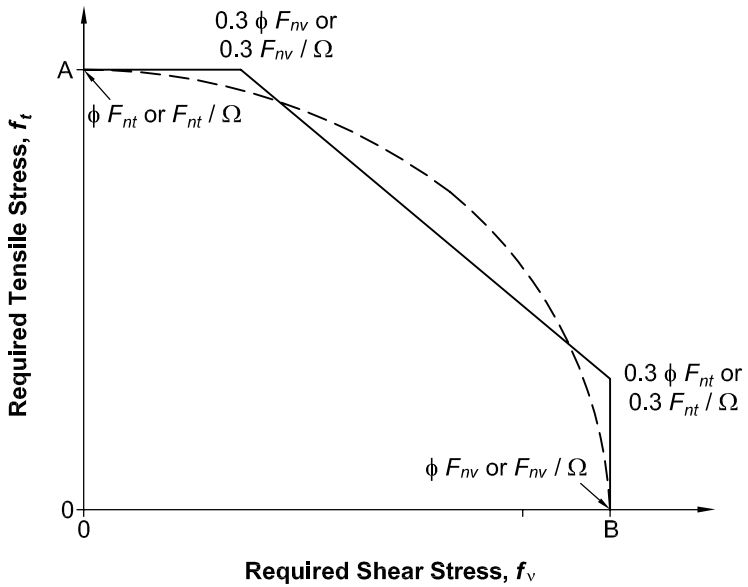

Fig. C-J3.2. Straight-line representation of elliptical solution.

For design according to Section B3.3 (LRFD):

$$F'_{nv} = 1.3F_{nv} - \frac{F_{nv}}{\phi F_{nt}} f_t \le F_{nv} \qquad \text{(C-J3-7a)}$$

For design according to Section B3.4 (ASD):

$$F'_{nv} = 1.3F_{nv} - \frac{\Omega F_{nv}}{F_{nt}} f_t \le F_{nv} \qquad \text{(C-J3-7b)}$$

The linear relationship was adopted for use in Section J3.7; generally, use of the elliptical relationship is acceptable (see Figure C-J3.2). A similar formulation using the elliptical solution is:

For design according to Section B3.3 (LRFD):

$$F'_{nv} = F_{nt}\sqrt{1-\left(\frac{f_v}{\phi F_{nv}}\right)^2} \qquad \text{(C-J3-8a)}$$

For design according to Section B3.4 (ASD):

$$F'_{nv} = F_{nt}\sqrt{1-\left(\frac{\Omega f_v}{F_{nv}}\right)^2} \qquad \text{(C-J3-8b)}$$

8. High-Strength Bolts in Slip-Critical Connections

The design provisions for slip critical connections have remained substantially the same for many years. The original provisions, using standard holes with $^1/_{16}$ in. clearance, were based on a 10% probability of slip at code loads when tightened by calibrated wrench methods. This was comparable to a design for slip at approximately 1.4 to 1.5 times code loads. Because slip resistance was considered to be a serviceability design limit state, this was determined to be an adequate safety factor. Per the RCSC *Guide to the Design Criteria for Bolted and Riveted Joints* (Kulak et al., 1987) the provisions were revised to include oversized and slotted holes (Allan and Fisher, 1968). The revised provisions included a reduction in the allowable strength of 15% for oversize holes, 30% for long slots perpendicular, and 40% for long slots parallel to the direction of the load.

Except for minor changes and adding provisions for LRFD, the design of slip-critical connections were unchanged until the 2005 AISC Specification added a higher reliability level for slip-critical connections designed for use where selected by the engineer of record. The reason for this added provision was twofold. First, the use of slip-critical connections with oversize holes had become very popular because of the economy they afforded, especially with large bolted trusses and heavy vertical bracing systems. While the Commentary to the RCSC *Specification* indicated that only the engineer of record can determine if potential slippage at service loads could reduce the ability of the frame to resist factored loads, it did not give any guidance

on how to do this. The 2005 Specification provided a procedure to design to resist slip at factored loads if slip at service loads could reduce the ability of the structure to support factored loads.

Second, many of these connection details require large filler plates. There was a question about the need to develop these fills and how to do it. The 1999 LRFD Specification stated that as an alternative to developing the filler "the joint shall be designed as slip critical." The RCSC *Specification* stated, "The joint shall be designed as a slip-critical joint. The slip resistance of the joint shall not be reduced for the presence of fillers or shims." Both specifications required the joint to be checked as a bearing connection, which normally would require development of large fillers.

The answer to both of these issues seemed to provide a method for designing a connection with oversize holes to resist slip at the strength level and not require the bearing strength check for the connection. In order to do this, it was necessary to first determine as closely as possible what the slip resistance currently was for oversize holes. Then it was necessary to establish what would be an adequate level of slip resistance to be able to say the connection could resist slip at factored loads.

Three major research projects formed the primary sources for the development of the 2010 Specification provisions for slip-critical connections:

(1) Dusicka and Iwai (2007) evaluated slip-critical connections with fills for the Research Council on Structural Connections. The work provides results relevant to all slip-critical connections with fills.

(2) Grondin et al. (2007) is a two-part study that assembles slip resistance data from all known sources and analyzes reliability of SC connections indicated by that data. A structural system configuration—a long span roof truss—is evaluated to see if slip required more reliability in slip-critical connections.

(3) Borello et al. (2009) conducted 16 large-scale tests of slip-critical connections in both standard and oversize holes with and without thick fillers.

Deliberations considered in development and investigation of the 2010 Specification slip-critical provisions include the following:

Slip Coefficient for Class A Surfaces. Grondin et al. (2007) rigorously evaluated the test procedures and eliminated a substantial number of tests that did not meet the required protocol. The result was a recommended slip coefficient for Class A surfaces between 0.31 and 0.32. Part of the problem is the variability of what is considered to be clean mill scale. Current data on galvanized surfaces indicated more research was required and the American Galvanizers Association is sponsoring a series of tests to determine if further changes in the slip coefficient for these types of surfaces is needed.

Slip Coefficient for Class B Surfaces. Based on a review of slip tests by paint manufacturers and the results of the slip resistance of the connections (Borello et al., 2009), a slight increase in the slip coefficient for Class B surfaces might be possible, but the available data is insufficient to make a change in the 2010 Specification.

Oversized Holes and Loss of Pretension. Borello et al. (2009) confirms that there is no additional loss of pretension and that connections with oversized holes had similar slip resistance to the control group with standard holes.

Higher Pretension with Turn-of-Nut Method. The difficulty in knowing in advance what method of pretensioning would be used resulted in leaving the value of D_u at 1.13 as established for the calibrated wrench method. The Specification does, however, allow the use of a higher D_u value when approved by the engineer of record.

Shear/Bearing Strength. Borello et al. (2009) verified that connections with oversized holes, regardless of fill size, can develop the available bearing strength when the fill is developed. There was some variation in shear strength with filler size but the maximum reduction for thick fillers was approximately 15% when undeveloped.

Fillers in Slip-Critical Connections. Borello et al. (2009) indicated that filler thickness did not reduce the slip resistance of the connection. Borello et al. (2009) and Dusicka and Iwai (2007) indicated that the multiple fillers, as shown in Figure C-J3.3, reduced the slip resistance. It was determined that a factor for the number of fillers should be included in the design equation. A plate welded to the connected member or connection plate is not a filler plate and does not require this reduction factor.

The 2010 Specification provisions for slip-critical connections are based on the following conclusions:

- The mean and coefficient of variation in Class A slip-critical connections supports the use of a $\mu = 0.31$, not 0.33 or 0.35. It was expected that the use of $\mu = 0.30$ would achieve more consistent reliability while using the same resistance factors for both slip classes. The value of $\mu = 0.30$ was selected and the resistance and safety factors reflect this value.
- A factor, h_f, to reflect the use of multiple filler plates was added to the equation for nominal slip resistance resulting in

$$R_n = \mu D_u h_f T_b n_s \qquad \text{(C-J3-9)}$$

where

h_f = factor for fillers; coefficient to reflect the reduction in slip due to multiple fills

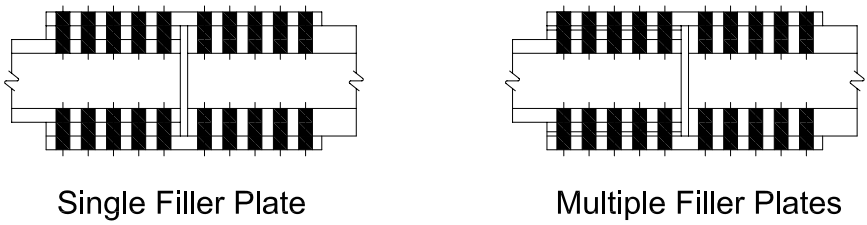

Fig C-J3.3. Single and multiple filler plate configurations.

TABLE C-J3.1
Reliability Factors, β, for Slip Resistance

Group	Class	Turn-of-Nut Method		Other Methods	
		Standard Holes	Oversized Holes	Standard Holes	Oversized Holes
Group A (A325)	Class A (μ = 0.30)	2.39	2.92	1.21	1.80
	Class B (μ = 0.50)	2.78	3.52	1.48	2.16
Group B (A490)	Class A (μ = 0.30)	2.01	2.63	1.31	1.90
	Class B (μ = 0.50)	2.47	3.20	1.60	2.28

- D_u is defined as a parameter derived from statistical analysis to calculate nominal slip resistance from statistical means developed as a function of installation method and minimum specified pretension and the level of slip probability selected.
- The surfaces of fills must be prepared to the same or higher slip coefficient as the other faying surfaces in the connection.
- The reduction in design slip resistance for oversized and slotted holes is not due to a reduction in tested slip resistance but is a factor used to reflect the consequence of slip. It was continued at the 0.85 level but clearly documented as a factor increasing the slip resistance of the connection.

The Specification also recognizes a special type of slip-resistant connection for use in built-up compression members in Section E6 where pretensioned bolts and a minimum of Class A surfaces are required but the connection is designed using the bearing strength of the bolts. This is based on the need to prevent relative movement between elements of the compression member at the ends.

Reliability levels for slip resistance in oversized holes and slots parallel to the load (given in Table C-J3.1) exceed reliability levels associated with the nominal strength of main members in the Specification when turn-of-nut pretensioning is used. Reliability of slip resistance when other tightening methods are used exceeds previous levels and is sufficient to prevent slip at load levels where inelastic deformation of the connected parts is expected. Since the effect of slip in standard holes is less than that of slip in oversized holes, the reliability factors permitted for standard holes are lower than those for oversized holes. This increased data on the reliability of these connections allowed the return to a single design level of slip resistance similar to the RCSC *Specification* (RCSC, 2009) and previous AISC Specifications.

9. Combined Tension and Shear in Slip-Critical Connections

The slip resistance of a slip-critical connection is reduced if there is applied tension. The factor, k_{sc}, is a multiplier that reduces the nominal slip resistance given by Equation J3-4 as a function of the applied tension load.

10. Bearing Strength at Bolt Holes

Provisions for bearing strength of pins differ from those for bearing strength of bolts; refer to Section J7.

Bearing strength values are provided as a measure of the strength of the material upon which a bolt bears, not as a protection to the fastener, which needs no such protection. Accordingly, the same bearing value applies to all joints assembled by bolts, regardless of fastener shear strength or the presence or absence of threads in the bearing area.

Material bearing strength may be limited either by bearing deformation of the hole or by tearout (a bolt-by-bolt block shear rupture) of the material upon which the bolt bears. Kim and Yura (1996) and Lewis and Zwerneman (1996) confirmed the bearing strength provisions for the bearing case wherein the nominal bearing strength, R_n, is equal to $CdtF_u$ and C is equal to 2.4, 3.0 or 2.0 depending upon hole type and/or acceptability of hole ovalization at ultimate load, as indicated in Section J3.10. However, this same research indicated the need for different bearing strength provisions when tearout failure would control. Appropriate equations for bearing strength as a function of clear distance, L_c, are therefore provided and this formulation is consistent with that in the RCSC *Specification* (RCSC, 2009).

Frank and Yura (1981) demonstrated that hole elongation greater than $^1/_4$ in. (6 mm) will generally begin to develop as the bearing force is increased beyond $2.4dtF_u$, especially if it is combined with high tensile stress on the net section, even though rupture does not occur. For a long-slotted hole with the slot perpendicular to the direction of force, the same is true for a bearing force greater than $2.0dtF_u$. An upper bound of $3.0dtF_u$ anticipates hole ovalization [deformation greater than $^1/_4$ in. (6 mm)] at maximum strength.

Additionally, to simplify and generalize such bearing strength calculations, the current provisions have been based upon a clear-distance formulation. Previous provisions utilized edge distances and bolt spacings measured to hole centerlines with adjustment factors to account for varying hole type and orientation, as well as minimum edge distance requirements.

A User Note has been added to this section pointing out that the effective strength of an individual bolt in shear may also be limited by the available shear strength per Section J3.6 or by the bearing per Section J3.10. The effective strength of the connection is the sum of the effective strengths of the individual bolts. This typically occurs when the effective strength of the end bolts in a connection is limited by tearout as described above. While the effective strength of some bolts in the connection may be less than others, the connection has enough ductility to allow all of the bolts to reach their individual effective strengths.

12. Tension Fasteners

With any connection configuration where the fasteners transmit a tensile force to the HSS wall, a rational analysis must be used to determine the appropriate limit states. These may include a yield-line mechanism in the HSS wall and/or pull-out through the HSS wall, in addition to applicable limit states for the fasteners subject to tension.

J4. AFFECTED ELEMENTS OF MEMBERS AND CONNECTING ELEMENTS

1. Strength of Elements in Tension

Tests have shown that for bolted splice plates yielding will occur on the gross section before the tensile strength of the net section is reached if the ratio A_n/A_g is greater than or equal to 0.85 (Kulak et al., 1987). Since the length of connecting elements is small compared to the member length, inelastic deformation of the gross section is limited. Hence, the effective net area, A_e, of the connecting element is limited to $0.85A_g$ in recognition of the limited capacity for inelastic deformation, and to provide a reserve capacity. Tests have also shown than A_e may be limited by the ability of the stress to distribute in the member. Analysis procedures such as the Whitmore section should be used to determine A_e in these cases.

2. Strength of Elements in Shear

Prior to 2005, the resistance factor for shear yielding had been 0.90, which was equivalent to a safety factor of 1.67. In ASD Specifications, the allowable shear yielding stress was $0.4F_y$, which was equivalent to a safety factor of 1.5. To make the LRFD approach in the 2005 Specification consistent with prior editions of the ASD Specification, the resistance and safety factors for shear yielding became 1.0 and 1.5, respectively. The resulting increase in LRFD design strength of approximately 10% is justified by the long history of satisfactory performance of ASD use.

3. Block Shear Strength

Tests on coped beams indicated that a tearing failure mode (rupture) can occur along the perimeter of the bolt holes as shown in Figure C-J4.1 (Birkemoe and Gilmor, 1978). This block shear mode combines tensile failure on one plane and shear failure on a perpendicular plane. The failure path is defined by the centerlines of the bolt holes.

The block shear failure mode is not limited to coped ends of beams; other examples are shown in Figures C-J4.1 and C-J4.2. The block shear failure mode must also be checked around the periphery of welded connections.

This Specification has adopted a conservative model to predict block shear strength. The mode of failure in coped beam webs and angles is different than that of gusset plates because the shear resistance is present on only one plane, in which case there must be some rotation of the block of material that is providing the total resistance.

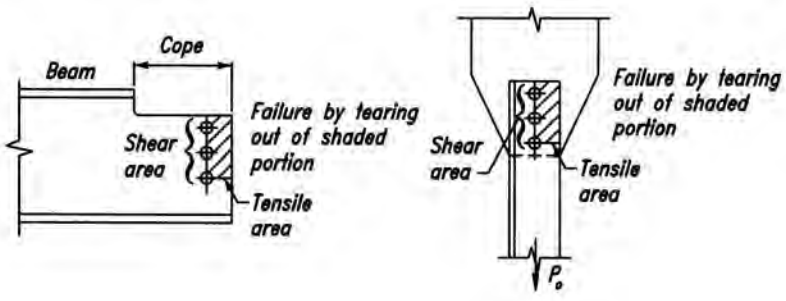

Fig. C-J4.1. Failure surface for block shear rupture limit state.

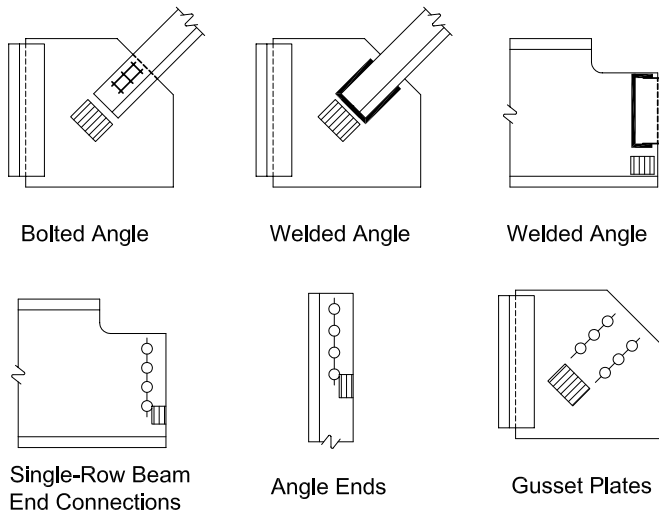

(a) Cases for which $U_{bs} = 1.0$

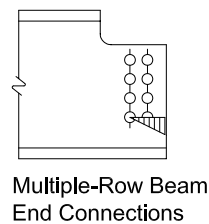

(b) Cases for which $U_{bs} = 0.5$

Fig. C-J4.2. Block shear tensile stress distributions.

Although tensile failure is observed through the net section on the end plane, the distribution of tensile stresses is not always uniform (Ricles and Yura, 1983; Kulak and Grondin, 2001; Hardash and Bjorhovde, 1985). A reduction factor, U_{bs}, has been included in Equation J4-5 to approximate the nonuniform stress distribution on the tensile plane. The tensile stress distribution is nonuniform in the two row connection in Figure C-J4.2(b) because the rows of bolts nearest the beam end pick up most of the shear load. For conditions not shown in Figure C-J4.2, U_{bs} may be taken as $(1 - e/l)$ where e/l is the ratio of the eccentricity of the load to the centroid of the resistance divided by the block length. This fits data reported by Kulak and Grondin (2001), Kulak and Grondin (2002), and Yura et al. (1982).

Block shear is a rupture or tearing phenomenon, not a yielding limit state. However, gross yielding on the shear plane can occur when tearing on the tensile plane commences if $0.6F_uA_{nv}$ exceeds $0.6F_yA_{gv}$. Hence, Equation J4-5 limits the term $0.6F_uA_{nv}$ to not greater than $0.6F_yA_{gv}$ (Hardash and Bjorhovde, 1985). Equation J4-5 is consistent with the philosophy in Chapter D for tension members where the gross area is used for the limit state of yielding and the net area is used for the limit state of rupture.

4. Strength of Elements in Compression

To simplify connection calculations, the nominal strength of elements in compression when the element slenderness ratio is not greater than 25 is F_yA_g. This is a very slight increase over that obtained if the provisions of Chapter E are used. For more slender elements, the provisions of Chapter E apply.

J5. FILLERS

As noted in Commentary Section J3.8, research reported in Borello et al. (2009) resulted in significant changes in the design of bolted connections with fillers. In the 2010 Specification, bearing connections with fillers over $^3/_4$-in. thick are no longer required to be developed provided the bolts are designed by multiplying the shear strength by a 0.85 factor.

Slip-critical connections with a single filler of any thickness with proper surface preparation may be designed without any reduction in slip resistance. Slip-critical connections with multiple fillers may be designed without any reduction in slip resistance provided the joint has either all faying surfaces with Class B surfaces or Class A surfaces with turn-of-nut tensioning. This provision for multiple fillers is based on the additional reliability of Class B surface or on the higher pretension achieved with the turn-of-nut tensioning.

Filler plates may be used in lap joints of welded connections that splice parts of different thickness, or where there may be an offset in the joint.

J7. BEARING STRENGTH

In general, the bearing strength design of finished surfaces is governed by the limit state of bearing (local compressive yielding) at nominal loads. The nominal bearing

strength of milled contact surfaces exceeds the yield strength because adequate safety is provided by post-yield strength as deformation increases. Tests on pin connections (Johnston, 1939) and rockers (Wilson, 1934) have confirmed this behavior.

J8. COLUMN BASES AND BEARING ON CONCRETE

The provisions of this section are identical to equivalent provisions in ACI 318 (ACI, 2008).

J9. ANCHOR RODS AND EMBEDMENTS

The term "anchor rod" is used for threaded rods embedded in concrete to anchor structural steel. The term "rod" is intended to clearly indicate that these are threaded rods, not structural bolts, and should be designed as threaded parts per Table J3.2 using the material specified in Section A3.4.

Generally, the largest tensile force for which anchor rods must be designed is that produced by bending moment at the column base and augmented by any uplift caused by the overturning tendency of a building under lateral load.

Shear at the base of a column is seldom resisted by bearing of the column base plate against the anchor rods. Even considering the lowest conceivable slip coefficient, the friction due to the vertical load on a column is generally more than sufficient to transfer the shear from the column base to the foundation. The possible exception is at the base of braced frames and moment frames where larger shear forces may require that shear transfer be accomplished by embedding the column base or providing a shear key at the top of the foundation.

The anchor rod hole sizes listed in Tables C-J9.1 and C-J9.1M are recommended to accommodate the variations that are common for setting anchor rods cast in concrete. These larger hole sizes are not detrimental to the integrity of the supported structure when used with proper washers. The slightly conical hole that results from punching operations or thermal cutting is acceptable.

If plate washers are utilized to resolve horizontal shear, bending in the anchor rod must be considered in the design, and the layout of anchor rods must accommodate plate washer clearances. In this case special attention must be given to weld clearances, accessibility, edge distances on plate washers, and the effect of the tolerances between the anchor rod and the edge of the hole.

It is important that the placement of anchor rods be coordinated with the placement and design of reinforcing steel in the foundations as well as the design and overall size of base plates. It is recommended that the anchorage device at the anchor rod bottom be as small as possible to avoid interference with the reinforcing steel in the foundation. A heavy-hex nut or forged head is adequate to develop the concrete shear cone. See AISC Design Guide 1, *Base Plate and Anchor Rod Design* (Fisher and Kloiber, 2006) for design of base plates and anchor rods. See also ACI 318 (ACI, 2008) and ACI 349 (ACI, 2001) for embedment design; and OSHA *Safety and Health Regulations for Construction*, Standards—29 CFR 1926 Subpart

TABLE C-J9.1
Anchor Rod Hole Diameters, in.

Anchor Rod Diameter	Anchor Rod Hole Diameter
1/2	1 1/16
5/8	1 3/16
3/4	1 5/16
7/8	1 9/16
1	1 13/16
1 1/4	2 1/16
1 1/2	2 5/16
1 3/4	2 3/4
≥ 2	d_b + 1 1/4

TABLE C-J9.1M
Anchor Rod Hole Diameters, mm

Anchor Rod Diameter	Anchor Rod Hole Diameter
18	32
22	36
24	42
27	48
30	51
33	54
36	60
39	63
42	74

R—Steel Erection (OSHA, 2001) for anchor rod design and construction requirements for erection safety.

J10. FLANGES AND WEBS WITH CONCENTRATED FORCES

This Specification separates flange and web strength requirements into distinct categories representing different limit states: flange local bending (Section J10.1), web local yielding (Section J10.2), web crippling (Section J10.3), web *sidesway buckling* (Section J10.4), web compression buckling (Section J10.5), and web panel-zone shear (Section J10.6). These limit state provisions are applied to two distinct types of concentrated forces normal to member flanges:

(1) Single concentrated forces may be tensile (such as those delivered by tension hangers) or compressive (such as those delivered by bearing plates at beam interior positions, reactions at beam ends, and other bearing connections).
(2) Double concentrated forces, one tensile and one compressive, form a couple on the same side of the loaded member, such as that delivered to column flanges through welded and bolted moment connections.

Flange local bending applies only for tensile forces, web local yielding applies to both tensile and compressive forces, and the remainder of these limit states apply only to compressive forces.

Transverse stiffeners, also called continuity plates, and web doubler plates are only required when the concentrated force exceeds the available strength given for the applicable limit state. It is often more economical to choose a heavier member than to provide such reinforcement (Carter, 1999; Troup, 1999). The demand may be determined as the largest flange force from the various load cases, although the demand may also be taken as the gross area of the attachment delivering the force multiplied by the specified minimum yield strength, F_y. Stiffeners and/or doublers and their attaching welds are sized for the difference between the demand and the applicable limit state strength. Detailing and other requirements for stiffeners are provided in Section J10.7 and Section J10.8; requirements for doublers are provided in Section J10.9.

1. Flange Local Bending

Where a tensile force is applied through a plate welded across a flange, that flange must be sufficiently rigid to prevent deformation of the flange and the corresponding high stress concentration in the weld in line with the web.

The effective column flange length for local flange bending is $12t_f$ (Graham et al., 1960). Thus, it is assumed that yield lines form in the flange at $6t_f$ in each direction from the point of the applied concentrated force. To develop the fixed edge consistent with the assumptions of this model, an additional $4t_f$, and therefore a total of $10t_f$, is required for the full flange-bending strength given by Equation J10-1. In the absence of applicable research, a 50% reduction has been introduced for cases wherein the applied concentrated force is less than $10t_f$ from the member end.

The strength given by Equation J10-1 was originally developed for moment connections but also applies to single concentrated forces such as tension hangers consisting of a plate welded to the bottom flange of a beam and transverse to the beam web. In the original tests, the strength given by Equation J10-1 was intended to provide a lower bound to the force required for weld fracture, which was aggravated by the uneven stress and strain demand on the weld caused by the flange deformation (Graham et al., 1959).

Recent tests on welds with minimum Charpy V-notch (CVN) toughness requirements show that weld fracture is no longer the failure mode when the strength given by Equation J10-1 is exceeded. Rather, it was found that the strength given by Equation J10-1 is consistently less than the force required to separate the flanges in typical column sections by $^1/_4$ in. (6 mm) (Hajjar et al., 2003; Prochnow et al.,

2000). This amount of flange deformation is on the order of the tolerances in ASTM A6, and it is believed that if the flange deformation exceeded this level it could be detrimental to other aspects of the performance of the member, such as flange local buckling. Although this deformation could also occur under compressive normal forces, it is customary that flange local bending is checked only for tensile forces (because the original concern was weld fracture). Therefore it is not required to check flange local bending for compressive forces.

The provision in Section J10.1 is not applicable to moment end-plate and tee-stub type connections. For these connections, see Carter (1999) or the AISC *Steel Construction Manual (*AISC, 2005b).

2. Web Local Yielding

The web local yielding provisions (Equations J10-2 and J10-3) apply to both compressive and tensile forces of bearing and moment connections. These provisions are intended to limit the extent of yielding in the web of a member into which a force is being transmitted. The provisions are based on tests on two-sided directly welded girder-to-column connections (cruciform tests) (Sherbourne and Jensen, 1957) and were derived by considering a stress zone that spreads out with a slope of 2:1. Graham et al. (1960) report pull-plate tests and suggest that a 2.5:1 stress gradient is more appropriate. Recent tests confirm that the provisions given by Equations J10-2 and J10-3 are slightly conservative and that the yielding is confined to a length consistent with the slope of 2.5:1 (Hajjar et al., 2003; Prochnow et al., 2000).

3. Web Crippling

The web crippling provisions (Equations J10-4 and J10-5) apply only to compressive forces. Originally, the term "web crippling" was used to characterize a phenomenon now called local web yielding, which was then thought to also adequately predict web crippling. The first edition of the AISC LRFD Specification (AISC, 1986) was the first AISC Specification to distinguish between local web yielding and local web crippling. Web crippling was defined as crumpling of the web into buckled waves directly beneath the load, occurring in more slender webs, whereas web local yielding is yielding of that same area, occurring in stockier webs.

Equations J10-4 and J10-5 are based on research reported in Roberts (1981). The increase in Equation J10-5b for $l_b/d > 0.2$ was developed after additional testing to better represent the effect of longer bearing lengths at ends of members (Elgaaly and Salkar, 1991). All tests were conducted on bare steel beams without the expected beneficial contributions of any connection or floor attachments. Thus, the resulting provisions are considered conservative for such applications. Kaczinski et al. (1994) reported tests on cellular box beams with slender webs and confirmed that these provisions are appropriate in this type of member as well.

The equations were developed for bearing connections but are also generally applicable to moment connections.

The web crippling phenomenon has been observed to occur in the web adjacent to the loaded flange. For this reason, a half-depth stiffener (or stiffeners) or a half-depth doubler plate is needed to eliminate this limit state.

4. Web Sidesway Buckling

The web sidesway buckling provisions (Equations J10-6 and J10-7) apply only to compressive forces in bearing connections and do not apply to moment connections. The web sidesway buckling provisions were developed after observing several unexpected failures in tested beams (Summers and Yura, 1982; Elgaaly, 1983). In those tests the compression flanges were braced at the concentrated load, the web was subjected to compression from a concentrated load applied to the flange and the tension flange buckled (see Figure C-J10.1).

Web sidesway buckling will not occur in the following cases:

(a) For flanges restrained against rotation (such as when connected to a slab), when

$$\frac{h/t_w}{L_b/b_f} > 2.3 \qquad \text{(C-J10-1)}$$

(b) For flanges *not* restrained against rotation, when

$$\frac{h/t_w}{L_b/b_f} > 1.7 \qquad \text{(C-J10-2)}$$

where L_b is as shown in Figure C-J10.2.

Web sidesway buckling can be prevented by the proper design of lateral bracing or stiffeners at the load point. It is suggested that local bracing at both flanges be designed for 1% of the concentrated force applied at that point. If stiffeners are used, they must extend from the load point through at least one-half the beam or girder depth. In addition, the pair of stiffeners must be designed to carry the full load. If flange rotation is permitted at the loaded flange, neither stiffeners nor doubler plates are effective.

5. Web Compression Buckling

The web compression buckling provision (Equation J10-8) applies only when there are compressive forces on both flanges of a member at the same cross section, such as might occur at the bottom flange of two back-to-back moment connections under gravity loads. Under these conditions, the slenderness of the member web must be

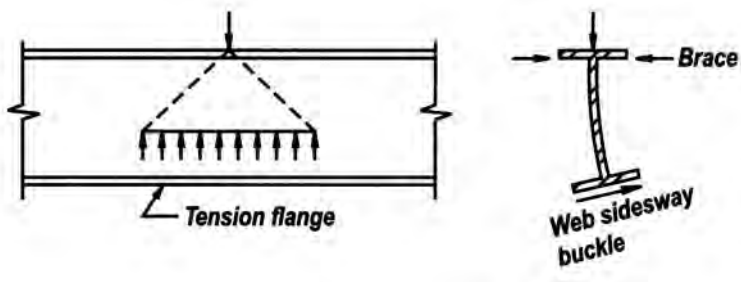

Fig. C-J10.1. Web sidesway buckling.

limited to avoid the possibility of buckling. Equation J10-8 is applicable to a pair of moment connections, and to other pairs of compressive forces applied at both flanges of a member, for which L_b/d is approximately less than 1. When L_b/d is not small, the member web should be designed as a compression member in accordance with Chapter E.

Equation J10-8 is predicated on an interior member loading condition. In the absence of applicable research, a 50% reduction has been introduced for cases wherein the compressive forces are close to the member end.

6. Web Panel-Zone Shear

Column web shear stresses may be significant within the boundaries of the rigid connection of two or more members with their webs in a common plane. Such webs must be reinforced when the required force ΣR_u for LRFD or ΣR_a for ASD along plane A-A in Figure C-J10.3 exceeds the column web available strength, ϕR_n or R_n/Ω, respectively.

For design according to Section B3.3 (LRFD):

$$\Sigma R_u = \frac{M_{u1}}{d_{m1}} + \frac{M_{u2}}{d_{m2}} - V_u \qquad \text{(C-J10-3a)}$$

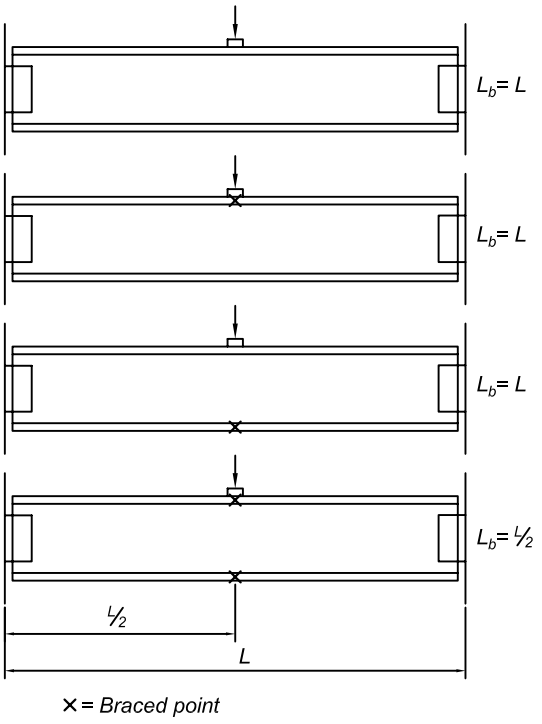

Fig. C-J10.2. Unbraced flange length for web sidesway buckling.

where

M_{u1} $= M_{u1L} + M_{u1G}$
= sum of the moments due to the factored lateral loads, M_{u1L}, and the moments due to factored gravity loads, M_{u1G}, on the windward side of the connection, kip-in. (N-mm)

M_{u2} $= M_{u2L} - M_{u2G}$
= difference between the moments due to the factored lateral loads M_{u2L} and the moments due to factored gravity loads, M_{u2G}, on the leeward side of the connection, kip-in. (N-mm)

d_{m1}, d_{m2} = distance between flange forces in the moment connection, in. (mm)

For design according to Section B3.4 (ASD):

$$\Sigma R_a = \frac{M_{a1}}{d_{m1}} + \frac{M_{a2}}{d_{m2}} - V_a \qquad \text{(C-J10-3b)}$$

where

$M_{a1} = M_{a1L} + M_{a1G}$
= sum of the moments due to the nominal lateral loads, M_{a1L}, and the moments due to nominal gravity loads, M_{a1G}, on the windward side of the connection, kip-in. (N-mm)

$M_{a2} = M_{a2L} - M_{a2G}$
= difference between the moments due to the nominal lateral loads, M_{a2L}, and the moments due to nominal gravity loads, M_{a2G}, on the leeward side of the connection, kip-in. (N-mm)

Historically (and conservatively), 0.95 times the beam depth has been used for d_m.

If, for LRFD $\Sigma R_u \le \phi R_n$, or for ASD $\Sigma R_a \le R_n/\Omega$, no reinforcement is necessary; in other words, $t_{req} \le t_w$, where t_w is the column web thickness.

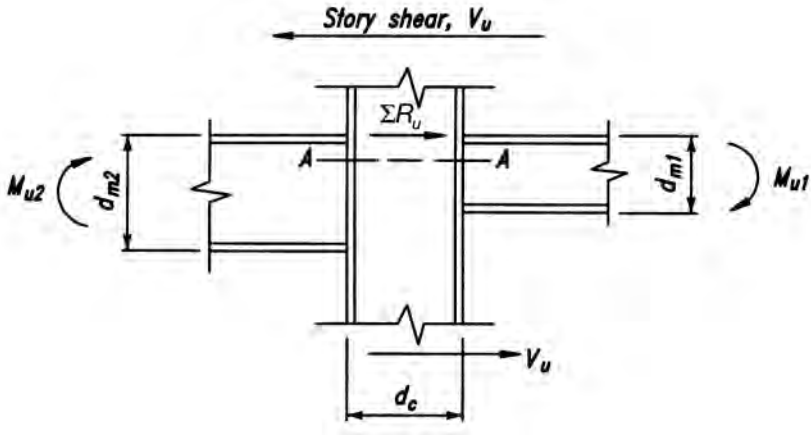

Fig. C-J10.3. LRFD forces in panel zone (ASD forces are similar).

Equations J10-9 and J10-10 limit panel-zone behavior to the elastic range. While such connection panels possess large reserve capacity beyond initial general shear yielding, the corresponding inelastic joint deformations may adversely affect the strength and stability of the frame or story (Fielding and Huang, 1971; Fielding and Chen, 1973). Panel-zone shear yielding affects the overall frame stiffness and, therefore, the resulting second-order effects may be significant. The shear/axial interaction expression of Equation J10-10, as shown in Figure C-J10.4, provides elastic panel behavior.

If adequate connection ductility is provided and the frame analysis considers the inelastic panel-zone deformations, the additional inelastic shear strength is recognized in Equations J10-11 and J10-12 by the factor

$$\left(1+\frac{3b_{cf}t_{cf}^2}{d_b d_c t_w}\right)$$

This increase in shear strength due to inelasticity has been most often utilized for the design of frames in high seismic applications and should be used when the panel zone is designed to develop the strength of the members from which it is formed.

The shear/axial interaction expression incorporated in Equation J10-12 (see Figure C-J10.5) recognizes that when the panel-zone web has completely yielded in shear, the axial column load is resisted by the flanges.

7. Unframed Ends of Beams and Girders

Full-depth stiffeners are required at unframed ends of beams and girders not otherwise restrained to avoid twisting about their longitudinal axes. These stiffeners are full depth but not fitted. They connect to the restrained flange but do not need to continue beyond the toe of the fillet at the far flange unless connection to the far flange is necessary for other purposes, such as resisting compression from a concentrated load on the far flange.

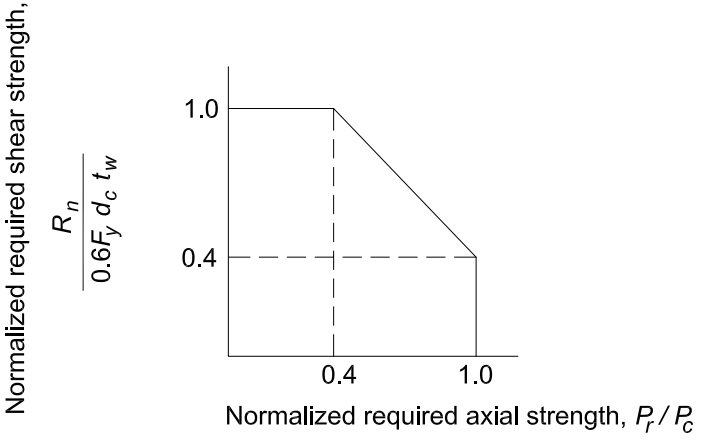

Fig. C-J10.4. Interaction of shear and axial force—elastic.

8. Additional Stiffener Requirements for Concentrated Forces

See Carter (1999), Troup (1999), and Murray and Sumner (2004) for guidelines on column stiffener design.

For rotary-straightened W-shapes, an area of reduced notch toughness is sometimes found in a limited region of the web immediately adjacent to the flange, referred to as the "*k*-area," as illustrated in Figure C-J10.6 (Kaufmann et al., 2001). The *k*-area is defined as the region of the web that extends from the tangent point of the web and the flange-web fillet (AISC *k* dimension) a distance $1^1/_2$ in. (38 mm) into the web beyond the *k* dimension. Following the 1994 Northridge Earthquake, there was a tendency to specify thicker transverse stiffeners that were groove welded to the web and flange, and thicker doubler plates that were often groove welded in the gap

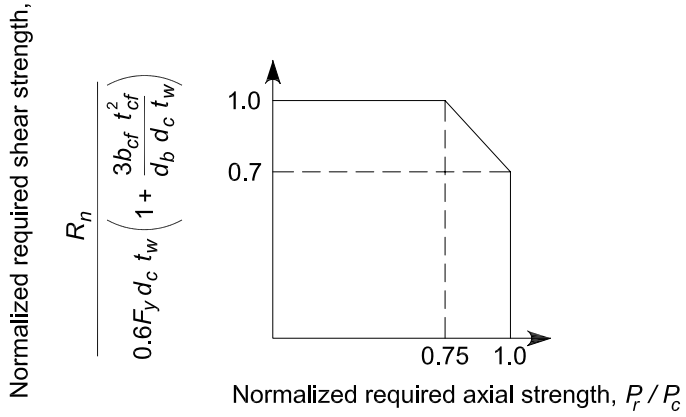

Fig. C-J10.5. Interaction of shear and axial force—inelastic.

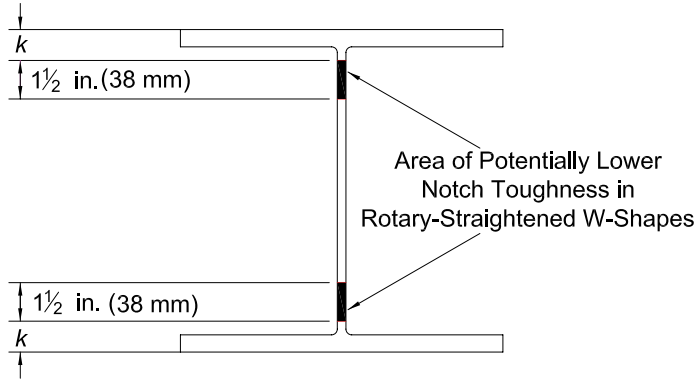

*Fig. C-J10.6. Representative "*k*-area" of a wide-flange shape.*

between the doubler plate and the flanges. These welds were highly restrained and may have caused cracking during fabrication in some cases (Tide, 1999). AISC (1997b) recommended that the welds for continuity plates terminate away from the *k*-area.

Recent pull-plate tests (Dexter and Melendrez, 2000; Prochnow et al., 2000; Hajjar et al., 2003) and full-scale beam-column joint testing (Bjorhovde et al., 1999; Dexter et al., 2001; Lee et al., 2002a) have shown that this problem can be avoided if the column stiffeners are fillet welded to both the web and the flange, the corner is clipped at least $1^1/_2$ in. (38 mm), and the fillet welds are stopped short by a weld leg length from the edges of the cutout, as shown in Figure C-J10.7. These tests also show that groove welding the stiffeners to the flanges or the web is unnecessary, and that the fillet welds performed well with no problems. If there is concern regarding the development of the stiffeners using fillet welds, the corner clip can be made so that the dimension along the flange is $^3/_4$ in. (20 mm) and the dimension along the web is $1^1/_2$ in. (38 mm).

Recent tests have also shown the viability of fillet welding doubler plates to the flanges, as shown in Figure C-J10.8 (Prochnow et al., 2000; Dexter et al., 2001; Lee et al., 2002a; Hajjar et al., 2003). It was found that it is not necessary to groove weld the doubler plates and that they do not need to be in contact with the column web to be fully effective.

9. Additional Doubler Plate Requirements for Concentrated Forces

When required, doubler plates are to be designed using the appropriate limit state requirements for the type of loading. The sum of the strengths of the member element and the doubler plate(s) must exceed the required strength and the doubler plate must be welded to the member element.

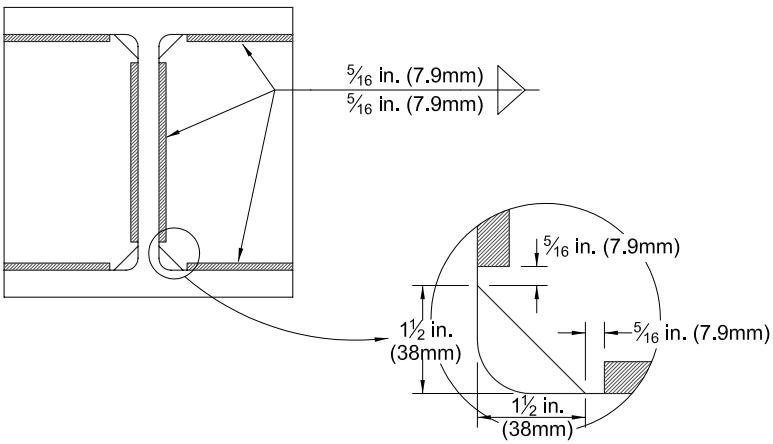

*Fig. C-J10.7. Recommended placement of stiffener fillet welds to avoid contact with "*k*-area."*

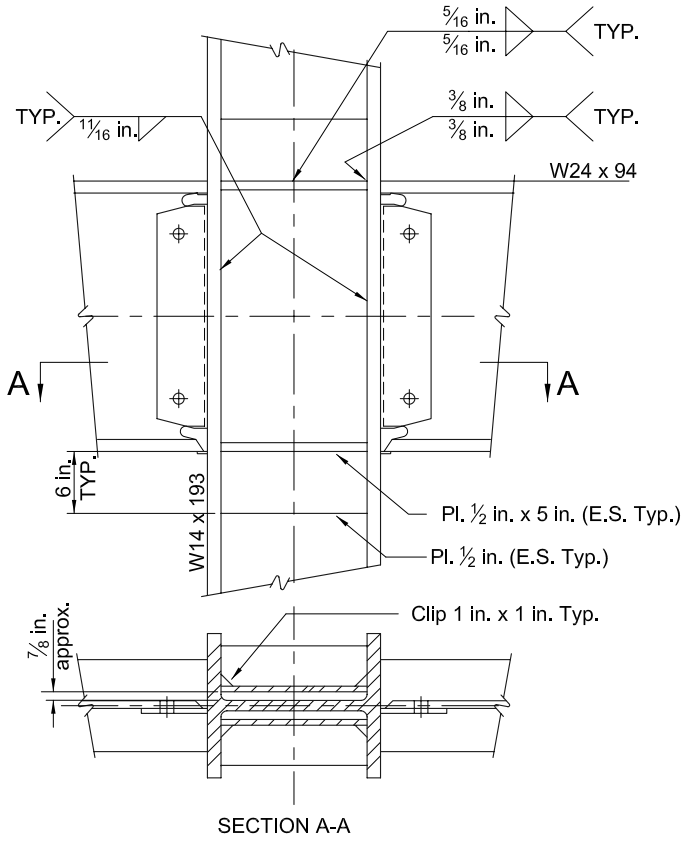

Fig. C-J10.8. Example of fillet welded doubler plate and stiffener details.

CHAPTER K

DESIGN OF HSS AND BOX MEMBER CONNECTIONS

Chapter K addresses the strength of HSS and box member welded connections. The provisions are based on failure modes that have been reported in international research on HSS, much of which has been sponsored and synthesized by CIDECT (International Committee for the Development and Study of Tubular Construction) since the 1960s. This work has also received critical review by the International Institute of Welding (IIW) Subcommission XV-E on "Tubular Structures." The HSS connection design recommendations are generally in accord with the design recommendations by this Subcommission (IIW, 1989). Some minor modifications to the IIW recommended provisions for some limit states have been made by the adoption of the formulations for the same limit states elsewhere in this Specification. The IIW connection design recommendations referred to above have also been implemented and supplemented in later design guides by CIDECT (Wardenier et al., 1991; Packer et al., 1992), in the design guide by the Canadian Institute of Steel Construction (Packer and Henderson, 1997) and in CEN (2005). Parts of these IIW design recommendations are also incorporated in AWS (2010). A large amount of research data generated by CIDECT research programs up to the mid-1980s is summarized in CIDECT Monograph No. 6 (Giddings and Wardenier, 1986). Further information on CIDECT publications and reports can be obtained from their website: **www.cidect.com**.

The scopes of Sections K2 and K3 note that the centerlines of the branch member(s) and the chord members must lie in a single plane. For other configurations, such as multi-planar connections, connections with partially or fully flattened branch member ends, double chord connections, connections with a branch member that is offset so that its centerline does not intersect with the centerline of the chord or connections with round branch members joined to a square or rectangular chord member, the provisions of IIW (1989), CIDECT (Wardenier et al., 1991; Packer et al., 1992), CISC (Packer and Henderson, 1997; Marshall, 1992; AWS, 2010), or other verified design guidance or tests can be used.

K1. CONCENTRATED FORCES ON HSS

1. Definitions of Parameters

Some of the notation used in Chapter K is illustrated in Figure C-K1.1.

2. Round HSS

See Commentary Section K1.3.

3. Rectangular HSS

The limits of applicability in Table K1.1A stem primarily from limitations on tests conducted to date.

Sections K1.2 and K1.3, although pertaining to all concentrated forces on HSS, are particularly oriented towards plate-to-HSS welded connections. Most of the equations (after application of appropriate resistance factors for LRFD) conform to CIDECT Design Guides 1 and 3 (Wardenier et al., 1991; Packer et al., 1992) with updates in accordance with CIDECT Design Guide 9 (Kurobane et al., 2004). The latter includes revisions for longitudinal plate-to-rectangular HSS connections (Equation K1-12) based on extensive experimental and numerical studies reported in Kosteski and Packer (2003). The provisions for the limit state of sidewall crippling of rectangular HSS, Equations K1-10 and K1-11, conform to web crippling expressions elsewhere in this Specification, and not to CIDECT or IIW recommendations. If a longitudinal plate-to-rectangular HSS connection is made by passing the plate through a slot in the HSS and then welding the plate to both the front and back HSS faces to form a "through-plate connection," the nominal strength can be taken as twice that given by Equation K1-12 (Kosteski and Packer, 2003), and is given in Equation K1-13.

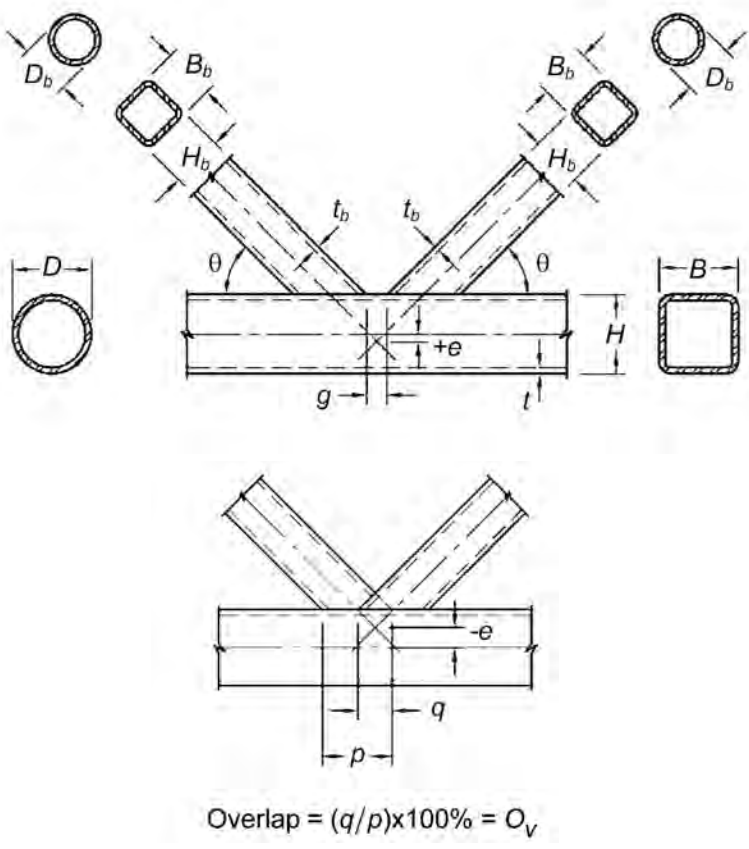

Fig. C-K1.1. Common notation for HSS connections.

The equations given for transverse plate-to-HSS connections can also be adapted for wide-flange beam-to-HSS PR moment connections, by treating the beam flanges as a pair of transverse plates and ignoring the beam web. For such wide-flange beam connections, the beam moment is thus produced by a force couple in the beam flanges. The connection flexural strength is then given by the plate-to-HSS connection strength multiplied by the distance between the beam flange centers. In Table K1.2 there is no check for the limit state of chord wall plastification for transverse plate-to-rectangular HSS connections, because this will not govern the design in practical cases. However, if there is a major compression load in the HSS, such as when it is used as a column, one should be aware that this compression load in the main member has a negative influence on the yield line plastification failure mode of the connecting chord wall (via a Q_f factor). In such a case, the designer can utilize guidance in CIDECT Design Guide No. 9 (Kurobane et al., 2004).

Tables K1.1 and K1.2 include limit states for HSS to longitudinal plate connections loaded in shear. These recommendations are based on Sherman and Ales (1991) and Sherman (1995b, 1996), where a large number of simple framing connections between wide-flange beams and rectangular HSS columns are investigated, in which the load transferred was predominantly shear. A review of costs also showed that single-plate and single-angle connections were the most economical, with double-angle and fillet-welded tee connections being more expensive. Through-plate and flare-bevel welded tee connections were among the most expensive (Sherman, 1995b). Over a wide range of connections tested, only one limit state was identified for the rectangular HSS column: punching shear failure related to end rotation of the beam, when a thick shear plate was joined to a relatively thin-walled HSS. Compliance with the inequality given by Equation K1-3 precludes this HSS failure mode. This design rule is valid providing the HSS wall is not classified as a *slender element*. An extrapolation of the inequality given by Equation K1-3 has also been made for round HSS columns, subject to the round HSS cross section not being classified as a *slender element*.

In Table K1.2, two limit states are given for the strength of a square or rectangular HSS wall with load transferred through a cap plate (or the flange of a T-stub), as shown in Figure C-K1.2. In general, the rectangular HSS could have dimensions of $B \times H$, but the illustration shows the bearing length (or width), l_b, oriented for lateral load dispersion into the wall of dimension B. A conservative distribution slope can be assumed as 2.5:1 from each face of the tee web (Wardenier et al., 1991; Kitipornchai and Traves, 1989), which produces a dispersed load width of $(5t_p + l_b)$. If this is less than B, only the two side walls of dimension B are effective in resisting the load, and even they will both be only partially effective. If $(5t_p + l_b) \geq B$, all four walls of the rectangular HSS will be engaged, and all will be fully effective; however, the cap plate (or T-stub flange) must be sufficiently thick for this to happen.

In Equations K1-14 and K1-15 the size of any weld legs has been conservatively ignored. If the weld leg size is known, it is acceptable to assume load dispersion from the toes of the welds. The same load dispersion model as shown in Figure C-K1.2 can also be applied to round HSS-to-cap plate connections.

K2. HSS-TO-HSS TRUSS CONNECTIONS

The classification of HSS truss-type connections as K- (which includes N-), Y- (which includes T-), or cross- (also known as X-) connections is based on the method of force transfer in the connection, not on the physical appearance of the connection. Examples of such classification are shown in Figure C-K2.1.

As noted in Section K2, when branch members transmit part of their load as K-connections and part of their load as T-, Y- or cross-connections, the adequacy of each branch is determined by linear interaction of the proportion of the branch load involved in each type of load transfer. One K-connection, shown in Figure C-K2.1(b), illustrates that the branch force components normal to the chord member may differ by as much as 20% and still be deemed to exhibit K-connection behavior. This is to accommodate slight variations in branch member forces along a typical truss, caused by a series of panel point loads. The N-connection in Figure C-K2.1(c), however, has a ratio of branch force components normal to the chord member of 2:1. In this case, the connection is analyzed as both a "pure" K-connection (with balanced branch forces) and a cross-connection (because the remainder of the diagonal branch load is being transferred through the connection), as shown in Figure C-K2.2. For the diagonal tension branch in that connection, the following check is also made:

$$(0.5P \sin\theta/\text{K-connection available strength}) + (0.5P \sin\theta/\text{cross-connection available strength}) \le 1.0$$

If the gap size in a gapped K- (or N-) connection [for example, Figure C-K2.1(a)] becomes large and exceeds the value permitted by the eccentricity limit, the K-connection should be treated as two independent Y-connections. In cross-connections, such as Figure C-K2.1(e), where the branches are close together or overlapping, the

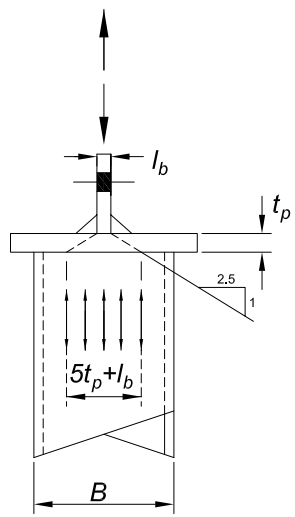

Fig. C-K1.2. Load dispersion from a concentrated force through a cap plate.

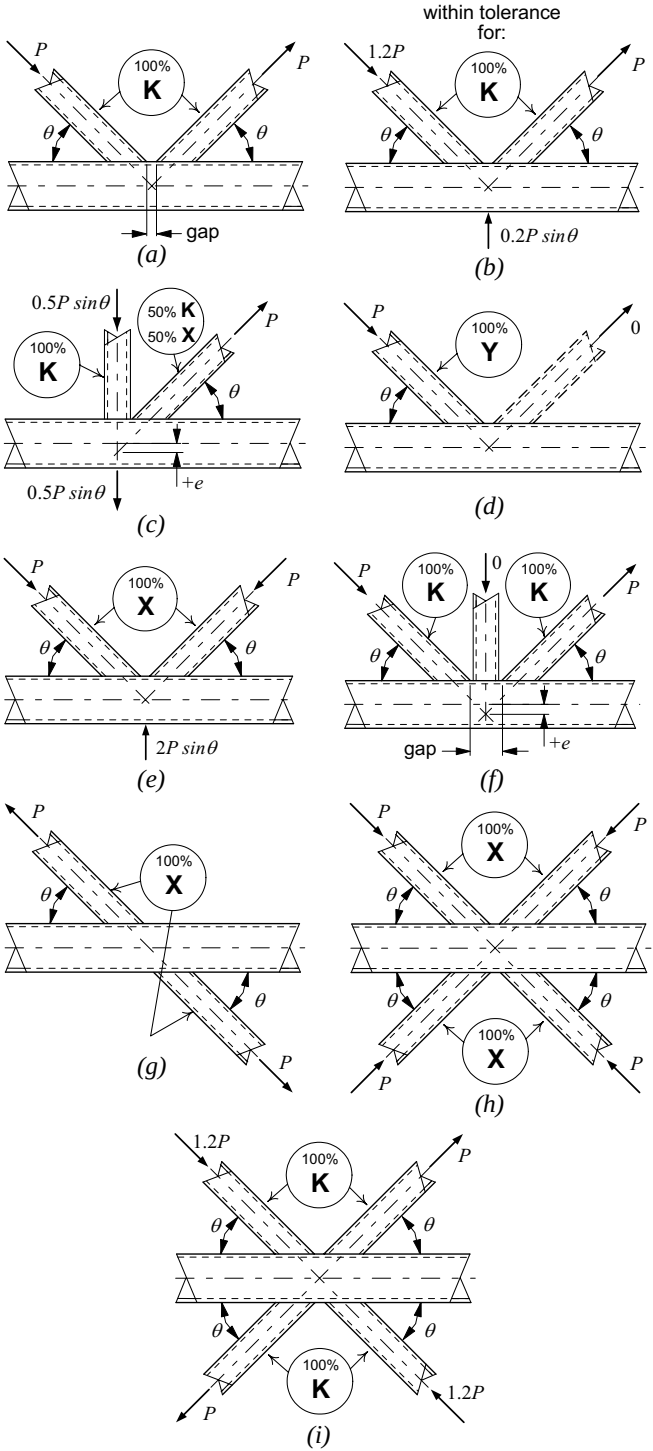

Fig. C-K2.1. Examples of HSS connection classification.

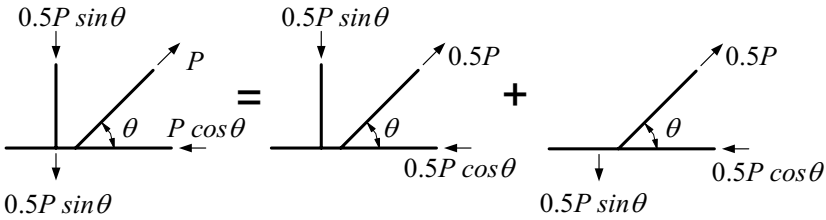

Fig. C-K2.2. Checking of K-connection with imbalanced branch member loads.

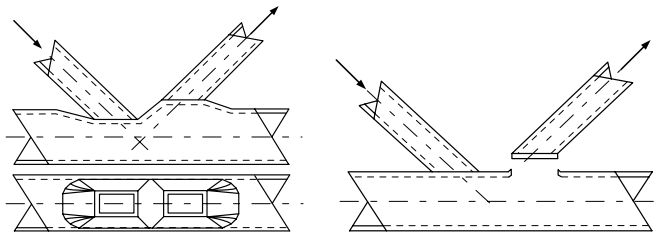

(a) Chord plastification *(b) Punching shear failure of the chord*

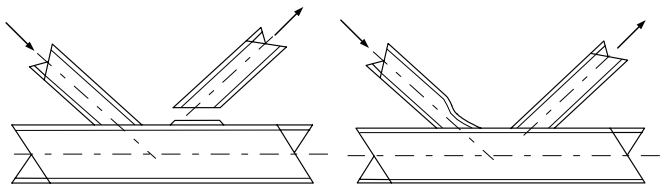

(c) Uneven load distribution in the tension branch *(d) Uneven load distribution in the compression branch*

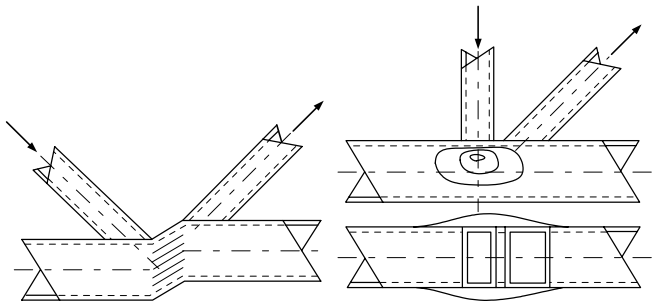

(e) Shear yielding of the chord *(f) Chord sidewall failure*

Fig. C-K2.3. Typical limit states for HSS-to-HSS truss connections.

combined "footprint" of the two branches can be taken as the loaded area on the chord member. In K-connections such as Figure C-K2.1(d), where a branch has very little or no loading, the connection can be treated as a Y-connection, as shown.

The design of welded HSS connections is based on potential limit states that may arise for a particular connection geometry and loading, which in turn represent possible failure modes that may occur within prescribed limits of applicability. Some typical failure modes for truss-type connections, shown for rectangular HSS, are given in Figure C-K2.3.

1. Definitions of Parameters

Some parameters are defined in Figure C-K1.1.

2. Round HSS

The limits of applicability in Table K2.1A generally represent the parameter range over which the equations have been verified in experiments. The following limitations bear explanation.

The minimum branch angle is a practical limit for good fabrication. Smaller branch angles are possible, but prior agreement with the fabricator should be made.

The wall slenderness limit for the compression branch is a restriction so that connection strength is not reduced by branch local buckling.

The minimum width ratio limit for gapped K-connections is based on Packer (2004), who showed that for width ratios less than 0.4, Equation K2-4 may be potentially unconservative when evaluated against proposed equations for the design of such connections by the American Petroleum Institute (API, 1993).

The restriction on the minimum gap size is only stated so that adequate space is available to enable welding at the toes of the branches to be satisfactorily performed.

The restriction on the minimum overlap is applied so that there is an adequate interconnection of the branches, to enable effective shear transfer from one branch to the other.

The provisions given in Table K2.1 for T-, Y-, cross- and K-connections are generally based, with the exception of the punching shear provision, on semi-empirical "characteristic strength" expressions, which have a confidence of 95%, taking into account the variation in experimental test results as well as typical variations in mechanical and geometric properties. These "characteristic strength" expressions are then multiplied by resistance factors for LRFD or divided by safety factors for ASD to further allow for the relevant failure mode.

In the case of the chord plastification failure mode a ϕ of 0.90 or Ω of 1.67 is applied, whereas in the case of punching shear a ϕ of 0.95 or a Ω of 1.58 is applied. The latter ϕ is 1.00 (equivalent to Ω of 1.50) in many recommendations or specifications [for example, IIW (1989), Wardenier et al. (1991), and Packer and Henderson

(1997)], to reflect the large degree of reserve strength beyond the analytical nominal strength expression, which is itself based on the shear yield (rather than ultimate) strength of the material. In this Specification, however, a ϕ of 0.95 or Ω of 1.58 is applied to maintain consistency with the factors for similar failure modes in Table K2.2.

If the tensile stress, F_u, were adopted as a basis for a punching shear rupture criterion, the accompanying ϕ would be 0.75 and Ω would be 2.00, as elsewhere in this Specification. Then, $0.75(0.6F_u) = 0.45F_u$ would yield a very similar value to $0.95(0.6F_y) = 0.57F_y$, and in fact the latter is even more conservative for HSS with specified nominal F_y/F_u ratios less than 0.79. Equation K2-1 need not be checked when $D_b > D - 2t$ because this is the physical limit at which the branch can punch into (or out of) the main tubular member.

With round HSS in axially loaded K-connections, the size of the compression branch dominates the determination of the connection strength. Hence, the term $D_{b\,comp}$ in Equation K2-4 pertains only to the compression branch and is not an average of the two branches. Thus, if one requires the connection strength expressed as a force in the tension branch, one can resolve the answer from Equation K2-4 into the direction of the tension branch, using Equation K2-5. That is, it is not necessary to repeat a calculation similar to Equation K2-4 with D_b as the tension branch. Note that the K-connection section in Table K2.2 deals with branches subject to axial loading only. This is because there should only be axial forces in the branches of a typical planar K-connection if the truss structural analysis is performed according to one of the recommended methods, which are:

(a) pin-jointed analysis; or
(b) analysis using web members pin-connected to continuous chord members, as shown in Figure C-K2.4.

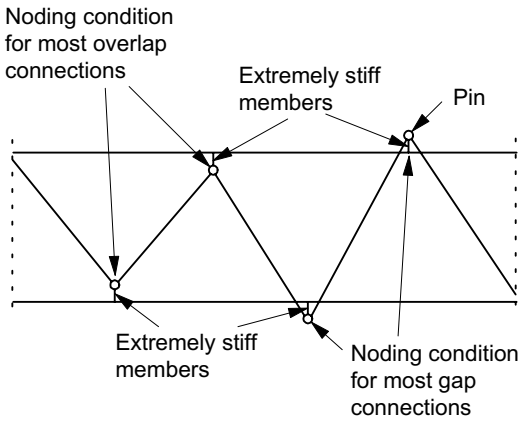

Fig. C-K2.4. Modeling assumption using web members pin-connected to continuous chord members.

3. Rectangular HSS

The limits of validity in Table K2.2A are established similarly to the limits for round HSS in Table K2.1A.

The restriction on the minimum gap ratio in Table K2.2A is modified from IIW (1989), according to Packer and Henderson (1997), to be more practical. In Table K2.2A there are two limits for the minimum gap dimension. The gap ratio (g/B) limit serves to ensure that sufficient load from a branch is transferred to the chord member sidewalls and to ensure that the demand for load transfer through the gap region is not excessive. The limit on g being at least the sum of the branch thicknesses is specified so that adequate space is available to enable welding at the toes of the branches to be satisfactorily performed.

Equation K2-7 represents an analytical yield line solution for flexure of the connecting chord face. This nominal strength equation serves to limit connection deformations and is known to be well below the ultimate connection strength. A ϕ of 1.00 or Ω of 1.50 is thus appropriate. When the branch width exceeds 85% of the chord width this yield line failure mechanism will result in a noncritical design load.

The limit state of punching shear, evident in Equations K2-8 and K2-15, is based on the effective punching shear perimeter around the branch, with the total branch perimeter being an upper limit on this length. The term β_{eop} represents the chord face effective punching shear width ratio, adjacent to one (Equation K2-15) or two (Equation K2-8) branch walls transverse to the chord axis. This β_{eop} term incorporates a ϕ of 0.80 or Ω of 1.88. Applying to generally one dimension of the rectangular branch footprint, this was deemed by AWS to be similar to a global ϕ of 0.95 or Ω of 1.58 for the whole expression, so this expression for punching shear appears in AWS (2010) with an overall ϕ of 0.95. This ϕ of 0.95 or Ω of 1.58 has been carried over to this Specification, and this topic is discussed further in Section C-K2.2. Limitations given above Equations K2-8 and K2-15 in Table K2.2 indicate when this failure mode is either physically impossible or noncritical. In particular, note that Equation K2-15 is noncritical for square HSS branches.

Equation K2-9 is generally in accord with a limit state given in IIW (1989), but with the k term [simply t in IIW (1989)] modified to be compatible with Equation K1-9, which in turn is derived from loads on I-shaped members. Equations K2-10 and K2-11 are in a format different than used internationally [for example, IIW (1989)] for this limit state and are unique to this Specification, having been replicated from Equations K1-10 and K1-11, along with their associated ϕ's and Ω's. These latter equations in turn are HSS versions (for two webs) of equations for I-shaped members with a single web.

The limit state of "uneven load distribution," which is manifested by local buckling of a compression branch or premature yield failure of a tension branch, represented by Equations K2-12 and K2-16, is checked by summing the effective areas of the four sides of the branch member. For T-, Y- and cross-connections the two walls of the branch transverse to the chord are likely to be only partially effective (Equation K2-12), whereas for gapped K-connections one wall of the branch transverse to

the chord is likely to be only partially effective (Equation K2-16). This reduced effectiveness is primarily a result of the flexibility of the connecting face of the chord, as incorporated in Equations K2-13. The effective width term, b_{eoi}, has been derived from research on transverse plate-to-HSS connections (as cited below for overlapped K-connections) and incorporates a ϕ factor of 0.80 or Ω factor of 1.88. Applying the same logic described above for the limit state of punching shear, a global ϕ factor of 0.95 or Ω factor of 1.58 has been adopted in AWS D1.1/D1.1M (AWS, 2010), and this has been carried over to this Specification [although, as noted previously, a ϕ factor of 1.0 is used in IIW (1989)].

For T-, Y- and cross-connections with $\beta \le 0.85$, the connection strength is determined by Equation K2-7 only.

For axially loaded, gapped K-connections, plastification of the chord connecting face under the "push-pull" action of the branches is by far the most prevalent and critical failure mode. Indeed, if all the HSS members are square, this failure mode is critical and Equation K2-14 is the only one to be checked. This formula for chord face plastification is a semi-empirical "characteristic strength" expression, which has a confidence of 95%, taking into account the variation in experimental test results as well as typical variations in mechanical and geometric properties. Equation K2-14 is then multiplied by a ϕ factor for LRFD or divided by an Ω factor for ASD to further allow for the failure mode and provide an appropriate safety margin. A reliability calibration (Packer et al., 1984) for this equation, using a database of 263 gapped K-connections and the exponential expression for the resistance factor (with a safety index of 3.0 and a coefficient of separation of 0.55) derived a ϕ factor of 0.89 (Ω factor of 1.69), while also imposing the parameter limits of validity. Since this failure mode dominates the test database, there is insufficient supporting test data to calibrate Equations K2-15 and K2-16.

For the limit state of shear yielding of the chord in the gap of gapped K-connections, Table K2.2 differs from international practice [for example, IIW (1989)] by recommending application of another section of this Specification, Section G5. This limit state need only be checked if the chord member is rectangular, not square, and is also oriented such that the shorter wall of the chord section lies in the plane of the truss, hence providing a more critical chord shear condition due to the short "webs." The axial force present in the gap region of the chord member may also have an influence on the shear strength of the chord webs in the gap region.

For K-connections, the scope covers both gapped and overlapped connections. Note that the latter are generally more difficult and more expensive to fabricate than K-connections with a gap. However, an overlapped connection will, in general, produce a connection with a higher static strength and fatigue resistance, as well as a stiffer truss than its gapped connection counterpart.

Table K2.2 provisions for gapped and overlapped K-connections deal with branches subject to axial loading only. This is because there should only be axial forces in the branches of a typical planar K-connection if the truss structural analysis is performed according to one of the recommended methods, which are:

(a) pin-jointed analysis, or
(b) analysis using web members pin-connected to continuous chord members, as shown in Figure C-K2.4.

For rectangular HSS, the sole failure mode to be considered for design of overlapped connections is the limit state of "uneven load distribution" in the branches, manifested by either local buckling of the compression branch or premature yield failure of the tension branch. The design procedure presumes that one branch is welded solely to the chord and hence only has a single cut at its end. This can be considered "good practice" and the "thru member" is termed the overlapped member. For partial overlaps of less than 100%, the other branch is then double-cut at its end and welded to both the thru branch as well as the chord.

The branch to be selected as the "thru" or overlapped member should be the one with the larger overall width. If both branches have the same width, the thicker branch should be the overlapped branch.

For a single failure mode to be controlling (and not have failure by one branch punching into or pulling out of the other branch, for example), limits are placed on various connection parameters, including the relative width and relative thickness of the two branches. The foregoing fabrication advice for rectangular HSS also pertains to round HSS overlapped K-connections, but the latter involves more complicated profiling of the branch ends to provide good saddle fits.

Overlapped rectangular HSS K-connection strength calculations (Equations K2-17, K2-18 and K2-19) are performed initially just for the overlapping branch, regardless of whether it is in tension or compression, and then the resistance of the overlapped branch is determined from that. The equations for connection strength, expressed as a force in a branch, are based on the load-carrying contributions of the four side walls of the overlapping branch and follow the design recommendations of the International Institute of Welding (IIW, 1989; Packer and Henderson, 1997; AWS, 2010). The effective widths of overlapping branch member walls transverse to the chord (b_{eoi} and b_{eov}) depend on the flexibility of the surface on which they land, and are derived from plate-to-HSS effective width measurements (Rolloos, 1969; Wardenier et al., 1981; Davies and Packer, 1982). The constant of 10 in the b_{eoi} and b_{eov} terms has already been reduced from values determined in tests and incorporates a ϕ factor of 0.80 or Ω factor of 1.88 in those terms. Applying the same logic described above for the limit state of punching shear in T-, Y- and cross-connections, a global ϕ factor of 0.95 or Ω factor of 1.58 was adopted by AWS D1.1/D1.1M and this has been carried over to this Specification [although as noted previously a ϕ factor of 1.0 is used by IIW (1989)].

The applicability of Equations K2-17, K2-18 and K2-19 depends on the amount of overlap, O_v, where $O_v = (q/p) \times 100\%$. It is important to note that p is the projected length (or imaginary footprint) of the overlapping branch on the connecting face of the chord, even though it does not physically contact the chord. Also, q is the overlap length measured along the connecting face of the chord beneath the region of overlap of the branches. This is illustrated in Figure C-K1.1.

A maximum overlap of 100% occurs when one branch sits completely on the other branch. In such cases, the overlapping branch is sometimes moved slightly up the overlapped branch so that the heel of the overlapping branch can be fillet welded to the face of the overlapped branch. If the connection is fabricated in this manner, an overlap slightly greater than 100% is created. In such cases, the connection strength for a rectangular HSS connection can be calculated by Equation K2-19 but with the B_{bi} term replaced by another b_{eov} term. Also, with regard to welding details, it has been found experimentally that it is permissible to just tack weld the "hidden toe" of the overlapped branch, providing that the components of the two branch member forces normal to the chord substantially balance each other and providing that the welds are designed for the yield capacity of the connected branch walls. The "hidden toe" should be fully welded to the chord if the normal components of the two branch forces differ by more than 20% or the welds to the branches are designed using an effective length approach. More discussion is provided in Commentary Section K4. If the components of the two branch forces normal to the chord do in fact differ significantly, the connection should also be checked for behavior as a T-, Y- or cross-connection, using the combined footprint and the net force normal to the chord (see Figure C-K2.2).

K3. HSS-TO-HSS MOMENT CONNECTIONS

Section K3 on HSS-to-HSS connections under moment loading is applicable to frames with PR or FR moment connections, such as Vierendeel girders. The provisions of Section K3 are not generally applicable to typical planar triangulated trusses, which are covered by Section K2, since the latter should be analyzed in a manner that results in no bending moments in the web members (see Commentary Section K2). Thus, K-connections with moment loading on the branches are not covered by this Specification.

Available testing for HSS-to-HSS moment connections is much less extensive than that for axially-loaded T-, Y-, cross- and K-connections. Hence, the governing limit states to be checked for axially loaded connections have been used as a basis for the possible limit states in moment-loaded connections. Thus, the design criteria for round HSS moment connections are based on the limit states of chord plastification and punching shear failure, with ϕ and Ω factors consistent with Section K2, while the design criteria for rectangular HSS moment connections are based on the limit states of plastification of the chord connecting face, chord side wall crushing, uneven load distribution, and chord distortional failure, with ϕ and Ω factors consistent with Section K2. The "chord distortional failure" mode is applicable only to rectangular HSS T-connections with an out-of-plane bending moment on the branch. Rhomboidal distortion of the branch can be prevented by the use of stiffeners or diaphragms to maintain the rectangular cross-sectional shape of the chord. The limits of applicability of the equations in Section K3 are predominantly reproduced from Section K2. The basis for the equations in Section K3 is Eurocode 3 (CEN, 2005), which represents one of the consensus specifications on welded HSS-to-HSS connections. The equations in Section K3 have also been adopted in CIDECT Design Guide No. 9 (Kurobane et al., 2004).

K4. WELDS OF PLATES AND BRANCHES TO RECTANGULAR HSS

Section K4 consolidates all the welding rules for plates and branch members to the face of an HSS into one section. In addition to reformatting the design rules for welds of plates and gapped connections (both unchanged) into a tabular format, the weld design rules have been expanded for T-, Y- and cross-connections to include moments, as well as axial loads, and added "fit for purpose" design rules for overlapped connections.

The design of welds to branches may be performed using either of two design philosophies:

(a) The welds may be proportioned to develop the strength of the connected branch wall, at all points along the weld length. This may be appropriate if the branch loading is complex or if the loading is not known by the weld designer. Welds sized in this manner represent an upper limit on the required weld size and may be excessively conservative in some situations.

(b) The welds may be designed as "fit for purpose," to resist branch forces that are typically known in HSS truss-type connections by using what is known as the "effective length concept." Many HSS truss web members are subjected to low axial loads and, in such situations, this weld design philosophy is ideal. However, the nonuniform loading of the weld perimeter due to the flexibility of the connecting HSS face must be taken into account by using weld effective lengths. Suitable effective lengths for plates and various rectangular HSS connections subject to branch axial loading (and/or moment loading in some cases) are given in Table K4.1. Several of these provisions are similar to those given in AWS (2010) and are based on full-scale HSS connection and truss tests that studied weld failures (Frater and Packer, 1992a, 1992b; Packer and Cassidy, 1995). Others (the newly added rules for moments in T-, Y- and cross-connections and axial forces in overlapped connections) are based on a rational extrapolation of the effective length concept used for design of the member itself. Diagrams which show the locations of the effective weld lengths (most of which are less than 100% of the total weld length) are shown in Table K4.1. This effective length approach to weld design recognizes that a branch to main member connection becomes stiffer along its edges, relative to the center of the HSS face, as the angle of the branch to the connecting face and/or the width ratio (the width of a branch member relative to the connecting face) increase. Thus, the effective length used for sizing the weld may decrease as either the angle of the branch member (when over 50° relative to the connecting face) or the branch member width (creating width ratios over 0.85) increase. Note that for ease of calculation and because the error is insignificant, the weld corners were assumed as square for determination of the weld line section properties in certain cases.

As noted in Commentary Section K2, when the welds in overlapped joints are adequate to develop the strength of the remaining member walls, it has been found experimentally that it is permissible to tack weld the "hidden toe" of the overlapped branch, providing that the components of the two branch member forces normal to the chord substantially balance each other. The "hidden toe" should be fully welded

to the chord if the normal components of the two branch forces differ by more than 20%. If the "fit for purpose" weld design philosophy is used in an overlapped joint the hidden weld should be completed even though the effective weld length may be much less than the perimeter of the tube. This helps account for the moments that can occur in typical HSS connections due to joint rotations and face deformations but are not directly accounted for in design.

Until further investigation proves otherwise, directional strength increases typically used in the design of fillet welds are not allowed in Section K4 when welding to the face of HSS members in truss-type connections. Additionally, the design weld size in all cases shown in Table K4.1, including the hidden weld underneath an overlapped member as discussed above, is the smallest weld throat around the connection perimeter; adding up the strengths of individual sections of a weld group with varying throat sizes around the perimeter of the cross section is not a viable approach to HSS connection design.

CHAPTER L
DESIGN FOR SERVICEABILITY

L1. GENERAL PROVISIONS

Serviceability limit states are conditions in which the functions of a building are impaired because of local damage, deterioration or deformation of building components, or occupant discomfort. While serviceability limit states generally do not involve collapse of a building, loss of life or injury, they can seriously impair the building's usefulness and lead to costly repairs and other economic consequences. Serviceability provisions are essential to provide satisfactory performance of building structural systems. Neglect of serviceability may result in structures that are excessively flexible or otherwise perform unacceptably in service.

The three general types of structural behavior that are indicative of impaired serviceability in steel structures are:

(1) Excessive deflections or rotations that may affect the appearance, function or drainage of the building or may cause damaging transfer of load to nonstructural components and attachments;
(2) Excessive vibrations produced by the activities of the building occupants, mechanical equipment or wind effects, which may cause occupant discomfort or malfunction of building service equipment; and
(3) Excessive local damage (local yielding, buckling, slip or cracking) or deterioration (weathering, corrosion and discoloration) during the service life of the structure.

Serviceability limit states depend on the occupancy or function of the building, the perceptions of its occupants, and the type of structural system. Limiting values of structural behavior intended to provide adequate levels of serviceability should be determined by a team consisting of the building owner/developer, the architect and the structural engineer after a careful analysis of all functional and economic requirements and constraints. In arriving at serviceability limits, the team should recognize that building occupants are able to perceive structural deformations, motions, cracking or other signs of distress at levels that are much lower than those that would indicate impending structural damage or failure. Such signs of distress may be viewed as an indication that the building is unsafe and diminish its economic value, and therefore must be considered at the time of design.

Service loads that may require consideration in checking serviceability include: (1) static loads from the occupants, snow or rain on the roof, or temperature fluctuations; and (2) dynamic loads from human activities, wind effects, the operation of mechanical or building service equipment, or traffic near the building. Service loads are loads that act on the structure at an arbitrary point in time, and may be only a fraction of the corresponding nominal load. The response of the structure to service loads generally can be analyzed assuming elastic behavior. Members that accumulate

residual deformations under service loads also may require examination with respect to this long-term behavior.

Serviceability limit states and appropriate load combinations for checking conformance to serviceability requirements can be found in ASCE/SEI 7, *Minimum Design Loads for Buildings and Other Structures*, Appendix C, and the Commentary Appendix C (ASCE, 2010).

L2. CAMBER

Camber is frequently specified in order to provide a level surface under *permanent loads*, for reasons of appearance or for alignment with other work. In normal circumstances camber does nothing to prevent excessive deflection or vibration. Camber in trusses is normally created by adjustment of member lengths prior to making shop connections. It is normally introduced in beams by controlled heating of selected portions of the beam or by cold bending, or both. Designers should be aware of practical limits presented by normal fabricating and erection practices. The *Code of Standard Practice for Steel Buildings and Bridges* (AISC, 2010a) provides tolerances on actual camber and recommends that all cambers be measured in the fabricating shop on unstressed members, along general guidelines. Further information on camber may be found in Ricker (1989) and Bjorhjovde (2006).

L3. DEFLECTIONS

Excessive vertical deflections and misalignment arise primarily from three sources: (1) gravity loads, such as dead, live and snow loads; (2) effects of temperature, creep and differential settlement; and (3) construction tolerances and errors. Such deformations may be visually objectionable; cause separation, cracking or leakage of exterior cladding, doors, windows and seals; and cause damage to interior components and finishes. Appropriate limiting values of deformations depend on the type of structure, detailing and intended use (Galambos and Ellingwood, 1986). Historically, common deflection limits for horizontal members have been 1/360 of the span for floors subjected to reduced live load and 1/240 of the span for roof members. Deflections of about 1/300 of the span (for cantilevers, 1/150 of the length) are visible and may lead to general architectural damage or cladding leakage. Deflections greater than 1/200 of the span may impair operation of moveable components such as doors, windows and sliding partitions.

Deflection limits depend very much on the function of the structure and the nature of the supported construction. Traditional limits expressed as a fraction of the span length should not be extrapolated beyond experience. For example, the traditional limit of 1/360 of the span worked well for controlling cracks in plaster ceilings with spans common in the first half of the twentieth century. Many structures with more flexibility have performed satisfactorily with the now common, and more forgiving, ceiling systems. On the other hand, with the advent of longer structural spans, serviceability problems have been observed with flexible grid ceilings where actual deflections were far less than 1/360 of the span, because the distance between partitions or other elements that may interfere with ceiling deflection are far less than the span of the structural member. Proper control of deflections is a complex subject

requiring careful application of professional judgment. West and Fisher (2003) provide an extensive discussion of the issues.

Deflection computations for composite beams should include an allowance for slip, creep and shrinkage (see Commentary Section I3).

In certain long-span floor systems, it may be necessary to place a limit, independent of span, on the maximum deflection to minimize the possibility of damage of adjacent nonstructural elements (ISO, 1977). For example, damage to nonload-bearing partitions may occur if vertical deflections exceed more than about $^3/_8$ in. (10 mm) unless special provision is made for differential movement (Cooney and King, 1988); however, many components can and do accept larger deformations.

Load combinations for checking static deflections can be developed using first-order reliability analysis (Galambos and Ellingwood, 1986). Current static deflection guidelines for floor and roof systems are adequate for limiting superficial damage in most buildings. A combined load with an annual probability of being exceeded of 5% is appropriate in most instances. For serviceability limit states involving visually objectionable deformations, repairable cracking or other damage to interior finishes, and other short-term effects, the suggested load combinations are:

$$D + L$$

$$D + 0.5S$$

For serviceability limit states involving creep, settlement or similar long-term or permanent effects, the suggested load combination is:

$$D + 0.5L$$

The dead load effect, D, may be that portion of dead load that occurs following attachment of nonstructural elements. For example, in composite construction, the dead load effects frequently are taken as those imposed after the concrete has cured. For ceiling related calculations, the dead load effects may include only those loads placed after the ceiling structure is in place.

L4. DRIFT

Drift (lateral deflection) in a steel building is a serviceability issue primarily from the effects of wind. Drift limits are imposed on buildings to minimize damage to cladding and to nonstructural walls and partitions. Lateral frame deflection is evaluated for the building as a whole, where the applicable parameter is the *total building drift*, defined as the lateral frame deflection at the top of the most occupied floor divided by the height of the building to that level, Δ/H. For each floor, the applicable parameter is *interstory drift*, defined as the lateral deflection of a floor relative to the lateral deflection of the floor immediately below, divided by the distance between floors, $(\delta_n - \delta_{n\text{-}1})/h$.

Typical drift limits in common usage vary from $H/100$ to $H/600$ for total building drift and $h/200$ to $h/600$ for interstory drift, depending on building type and the type of cladding or partition materials used. The most widely used values are H (or h)/400

to H (or h)/500 (ASCE Task Committee on Drift Control of Steel Building Structures, 1988). An absolute limit on *interstory drift* is sometimes imposed by designers in light of evidence that damage to nonstructural partitions, cladding and glazing may occur if the interstory drift exceeds about $^3/_8$ in. (10 mm), unless special detailing practices are employed to accommodate larger movements (Cooney and King, 1988; Freeman, 1977). Many components can accept deformations that are significantly larger. More specific information on the damage threshold for building materials is available in the literature (Griffis, 1993).

It is important to recognize that frame racking or shear distortion (in other words, strain) is the real cause of damage to building elements such as cladding and partitions. Lateral drift only captures the horizontal component of the racking and does not include potential vertical racking, as from differential column shortening in tall buildings, which also contributes to damage. Moreover, some lateral drift may be caused by rigid body rotation of the cladding or partition which by itself does not cause strain and therefore damage. A more precise parameter, the *drift damage index*, used to measure the potential damage, has been proposed (Griffis, 1993).

It must be emphasized that a reasonably accurate estimate of building drift is essential to controlling damage. The structural analysis must capture all significant components of potential frame deflection including flexural deformation of beams and columns, axial deformation of columns and braces, shear deformation of beams and columns, beam-column joint rotation (panel-zone deformation), the effect of member joint size, and the P-Δ effect (Charney, 1990). For many low-rise steel frames with normal bay widths of 30 to 40 ft (9 to 12 m), use of center-to-center dimensions between columns without consideration of actual beam column joint size and panel zone effects will usually suffice for checking drift limits. The stiffening effect of nonstructural cladding, walls and partitions may be taken into account if substantiating information (stress versus strain behavior) regarding their effect is available.

The level of wind load used in drift limit checks varies among designers depending upon the frequency with which the potential damage can be tolerated. Some designers use the same nominal wind load (wind load specified by the building code without a load factor) as used for the strength design of the members (typically a 50 or 100 year mean recurrence interval wind load). Other designers use a 10 year or 20 year mean recurrence interval wind load (Griffis, 1993; ASCE, 2010). Use of factored wind loads (nominal wind load multiplied by the wind load factor) is generally considered to be very conservative when checking serviceability.

It is important to recognize that drift control limits by themselves in wind-sensitive buildings do not provide comfort of the occupants under wind load. See Section L6 for additional information regarding perception of motion in wind sensitive buildings.

L5. VIBRATION

The increasing use of high-strength materials with efficient structural systems and open plan architectural layouts leads to longer spans and more flexible floor systems

having less damping. Therefore, floor vibrations have become an important design consideration. Acceleration is the recommended standard for evaluation.

An extensive treatment of vibration in steel-framed floor systems and pedestrian bridges is found in Design Guide 11, *Floor Vibrations Due to Human Activity* (Murray et al., 1997). This guide provides basic principles and simple analytical tools to evaluate steel-framed floor systems and footbridges for vibration serviceability due to human activities, including walking and rhythmic activities. Both human comfort and the need to control movement for sensitive equipment are considered.

L6. WIND-INDUCED MOTION

Designers of wind-sensitive buildings have long recognized the need for controlling annoying vibrations under the action of wind to protect the psychological well-being of the occupants (Chen and Robertson, 1972). The perception of building motion under the action of wind may be described by various physical quantities including maximum displacement, velocity, acceleration, and rate of change of acceleration (sometimes called "jerk"). Acceleration has become the standard for evaluation because it is readily measured in the field and can be easily calculated analytically. Human response to building motion is a complex phenomenon involving many psychological and physiological factors. Perception and tolerance thresholds of acceleration as a measure of building motion are known to depend on factors such as frequency of the building, occupant gender, age, body posture (sitting, standing or reclining), body orientation, expectation of motion, body movement, visual cues, acoustic clues, and the type of motion (translational or torsional) (ASCE, 1981). Different thresholds and tolerance levels exist for different people and responses can be very subjective. It is known that some people can become accustomed to building motion and tolerate higher levels than others. Limited research exists on this subject but certain standards have been applied for design as discussed below.

Acceleration in wind-sensitive buildings may be expressed as either root mean square (RMS) or peak acceleration. Both measures are used in practice and there is no clear agreement as to which is the more appropriate measure of motion perception. Some researchers believe that peak acceleration during wind storms is a better measure of actual perception but that RMS acceleration during the entire course of a wind storm is a better measure of actual discomfort. Target peak accelerations of 21 milli-g (0.021 times the acceleration of gravity) for commercial buildings (occupied mostly during daylight hours) and 15 milli-g for residential buildings (occupied during the entire day) under a 10-year mean recurrence interval wind storm have been successfully used in practice for many tall building designs (Griffis, 1993). The target is generally more strict for residential buildings because of the continuous occupancy, the perception that people are less sensitive and more tolerant at work than at home, the fact that there is more turnover in commercial buildings, and the fact that commercial buildings are more easily evacuated for peak wind events. Peak acceleration and RMS acceleration in wind-sensitive buildings are related by the "peak factor" best determined in a wind tunnel study and generally in the range of 3.5 for tall buildings (in other words, peak acceleration = peak

factor × RMS acceleration). Guidance for design acceleration levels used in building design may be found in the literature (Chen and Robertson, 1972; Hansen et al., 1973; Irwin, 1986; NRCC, 1990; Griffis, 1993;).

It is important to recognize that perception to building motion is strongly influenced by building mass and available damping as well as stiffness (Vickery et al., 1983). For this reason, building drift limits by themselves should not be used as the sole measure of controlling building motion (Islam et al., 1990). Damping levels for use in evaluating building motion under wind events are generally taken as approximately 1% of critical damping for steel buildings.

L7. EXPANSION AND CONTRACTION

The satisfactory accommodation of expansion and contraction cannot be reduced to a few simple rules, but must depend largely upon the judgment of a qualified engineer.

The problem is likely to be more serious in buildings with masonry walls than with prefabricated units. Complete separation of the framing at widely spaced expansion joints is generally more satisfactory than more frequently located devices that depend upon the sliding of parts in bearing, and usually less expensive than rocker or roller expansion bearings.

Creep and shrinkage of concrete and yielding of steel are among the causes, other than temperature, for dimensional changes. Conditions during construction, such as temperature effects before enclosure of the structure, should also be considered.

Guidelines for the recommended size and spacing of expansion joints in buildings may be found in NRC (1974).

L8. CONNECTION SLIP

In bolted connections with bolts in holes having only small clearances, such as standard holes and slotted holes loaded transversely to the axis of the slot, the amount of possible slip is small. Slip at these connections is not likely to have serviceability implications. Possible exceptions include certain unusual situations where the effect of slip is magnified by the configuration of the structure, such as a connection at the base of a shallow cantilever beam or post where a small amount of bolt slip may produce unacceptable rotation and deflection.

This Specification requires that connections with oversized holes or slotted holes loaded parallel to the axis of the slot be designed as slip-critical connections. For a discussion of slip at these connections, see the Commentary Section J3.8. Where slip at service loads is a realistic possibility in these connections, the effect of connection slip on the serviceability of the structure must be considered.

CHAPTER M
FABRICATION AND ERECTION

M1. SHOP AND ERECTION DRAWINGS

Supplementary information relevant to shop drawing documentation and associated fabrication, erection and inspection practices may be found in the *Code of Standard Practice for Steel Buildings and Bridges* (AISC, 2010a) and in Schuster (1997).

M2. FABRICATION

1. Cambering, Curving and Straightening

In addition to mechanical means, local application of heat is permitted for curving, cambering and straightening. Maximum temperatures are specified to avoid metallurgical damage and inadvertent alteration of mechanical properties. For ASTM A514/A514M and A852/A852M steels, the maximum is 1,100 °F (590 °C). For other steels, the maximum is 1,200 °F (650 °C). In general, these should not be viewed as absolute maximums; they include an allowance for a variation of about 100 °F (38 °C), which is a common range achieved by experienced fabricators (FHWA, 1999).

Temperatures should be measured by appropriate means, such as temperature-indicating crayons and steel color. Precise temperature measurements are seldom called for. Also, surface temperature measurements should not be made immediately after removing the heating torch because it takes a few seconds for the heat to soak into the steel.

Local application of heat has long been used as a means of straightening or cambering beams and girders. With this method, selected zones are rapidly heated and tend to expand. But the expansion is resisted by the restraint provided by the surrounding unheated areas. Thus, the heated areas are "upset" (increase in thickness) and, upon cooling, they shorten to effect a change in curvature. In the case of trusses and girders, cambering can be built in during assembly of the component parts.

Although the desired curvature or camber can be obtained by these various methods, including at room temperature (cold cambering) (Bjorhovde, 2006), it must be realized that some deviation due to workmanship considerations, as well as some permanent change due to handling, is inevitable. Camber is usually defined by one mid-ordinate, because control of more than one point is difficult and not normally needed. Reverse cambers are difficult to achieve and are discouraged. Long cantilevers are sensitive to camber and may deserve closer control.

2. Thermal Cutting

Thermal cutting is preferably done by machine. The requirement in ASTM A6/A6M for a positive preheat of 150 °F (66 °C) minimum when beam copes and weld access

holes are thermally cut in hot-rolled shapes with a flange thickness exceeding 2 in. (50 mm) and in built-up shapes made of material more than 2 in. (50 mm) thick tends to minimize the hard surface layer and the initiation of cracks. This requirement for preheat for thermal cutting does not apply when the radius portion of the access hole or cope is drilled and the thermally cut portion is essentially linear. Such thermally cut surfaces are required to be ground and inspected in accordance with Section J1.6.

4. Welded Construction

To avoid weld contamination, the light oil coating that is generally present after manufacturing an HSS should be removed with a suitable solvent in locations where welding will be performed. In cases where an external coating has been applied at the mill, the coating should be removed at the location of welding or the manufacturer should be consulted regarding the suitability of welding in the presence of the coating.

5. Bolted Construction

In most connections made with high-strength bolts, it is only required to install the bolts to the snug-tight condition. This includes bearing-type connections where slip is permitted and, for ASTM A325 or A325M bolts only, tension (or combined shear and tension) applications where loosening or fatigue due to vibration or load fluctuations are not design considerations.

It is suggested that snug-tight bearing-type connections with ASTM A325 or A325M or ASTM A490 or A490M bolts be used in applications where ASTM A307 bolts are permitted.

This section provides rules for the use of oversized and slotted holes paralleling the provisions that have been in the RCSC *Specification for High-Strength Bolts* since 1972 (RCSC, 2009), extended to include ASTM A307 bolts, which are outside the scope of the RCSC *Specification*.

The Specification previously limited the methods used to form holes, based on common practice and equipment capabilities. Fabrication methods have changed and will continue to do so. To reflect these changes, this Specification has been revised to define acceptable quality instead of specifying the method used to form the holes, and specifically to permit thermally cut holes. AWS C4.1, Sample 3, is useful as an indication of the thermally cut profile that is acceptable (AWS, 1977). The use of numerically controlled or mechanically guided equipment is anticipated for the forming of thermally cut holes. To the extent that the previous limits may have related to safe operation in the fabrication shop, fabricators are referred to equipment manufacturers for equipment and tool operating limits.

10. Drain Holes

Because the interior of an HSS is difficult to inspect, concern is sometimes expressed regarding internal corrosion. However, good design practice can eliminate the concern and the need for expensive protection.

Corrosion occurs in the presence of oxygen and water. In an enclosed building, it is improbable that there would be sufficient reintroduction of moisture to cause severe corrosion. Therefore, internal corrosion protection is a consideration only in HSS that are exposed to weather.

In a sealed HSS, internal corrosion cannot progress beyond the point where the oxygen or moisture necessary for chemical oxidation is consumed (AISI, 1970). The oxidation depth is insignificant when the corrosion process must stop, even when a corrosive atmosphere exists at the time of sealing. If fine openings exist at connections, moisture and air can enter the HSS through capillary action or by aspiration due to the partial vacuum that is created if the HSS is cooled rapidly (Blodgett, 1967). This can be prevented by providing pressure-equalizing holes in locations that make it impossible for water to flow into the HSS by gravity.

Situations where an internal protective coating may be required include: (1) open HSS where changes in the air volume by ventilation or direct flow of water is possible; and (2) open HSS subject to a temperature gradient that causes condensation. In such instances it may also be prudent to use a minimum $^{5}/_{16}$ in. (8 mm) wall thickness.

HSS that are filled or partially filled with concrete should not be sealed. In the event of fire, water in the concrete will vaporize and may create pressure sufficient to burst a sealed HSS. Care should be taken to ensure that water does not remain in the HSS during or after construction, since the expansion caused by freezing can create pressure that is sufficient to burst an HSS.

Galvanized HSS assemblies should not be completely sealed because rapid pressure changes during the galvanizing process tend to burst sealed assemblies.

11. Requirements for Galvanized Members

Cracking has been observed in steel members during hot-dip galvanizing. The occurrence of these cracks has been correlated to several characteristics including, but not limited to, highly restrained details, base material chemistry, galvanizing practices, and fabrication workmanship. The requirement to grind beam copes before galvanizing will not prevent all cope cracks from occurring during galvanizing. However, it has been shown to be an effective means to reduce the occurrence of this phenomenon.

Galvanizing of structural steel and hardware such as fasteners is a process that depends on special design, detailing and fabrication to achieve the desired level of corrosion protection. ASTM publishes a number of standards relating to galvanized structural steel:

ASTM A123 (ASTM, 2009e) provides a standard for the galvanized coating and its measurement and includes provisions for the materials and fabrication of the products to be galvanized.

ASTM A153/153M (ASTM, 2009a) is a standard for galvanized hardware such as fasteners that are to be centrifuged.

ASTM A384/384M (ASTM, 2007a) is the *Standard Practice for Safeguarding Against Warpage and Distortion During Hot-Dip Galvanizing of Steel Assemblies*. It includes information on factors that contribute to warpage and distortion as well as suggestions for correction for fabricated assemblies.

ASTM A385/385M (ASTM, 2009b) is the *Standard Practice for Providing High Quality Zinc Coatings (Hot-Dip)*. It includes information on base materials, venting, treatment of contacting surfaces, and cleaning. Many of these provisions should be indicated on the design and detail drawings.

ASTM A780/A780M (ASTM, 2009c) provides for repair of damaged and uncoated areas of hot-dip galvanized coatings.

M3. SHOP PAINTING

1. General Requirements

The surface condition of unpainted steel framing of long-standing buildings that have been demolished has been found to be unchanged from the time of its erection, except at isolated spots where leakage may have occurred. Even in the presence of leakage, the shop coat is of minor influence (Bigos et al., 1954).

This Specification does not define the type of paint to be used when a shop coat is required. Final exposure and individual preference with regard to finish paint are factors that determine the selection of a proper primer. A comprehensive treatment of the subject is found in various SSPC publications.

3. Contact Surfaces

Special concerns regarding contact surfaces of HSS should be considered. As a result of manufacturing, a light oil coating is generally present on the outer surface of the HSS. If paint is specified, HSS must be cleaned of this oil coating with a suitable solvent.

5. Surfaces Adjacent to Field Welds

This Specification allows for welding through surface materials, including appropriate shop coatings that do not adversely affect weld quality nor create objectionable fumes.

M4. ERECTION

2. Stability and Connections

For information on the design of temporary lateral support systems and components for low-rise buildings, see Fisher and West (1997).

4. Fit of Column Compression Joints and Base Plates

Tests on spliced full-size columns with joints that had been intentionally milled out-of-square, relative to either strong or weak axis, demonstrated that the load-carrying capacity was the same as that for similar columns without splices (Popov and

Stephen, 1977). In the tests, gaps of $^1/_{16}$ in. (2 mm) were not shimmed; gaps of $^1/_4$ in. (6 mm) were shimmed with nontapered mild steel shims. Minimum size partial-joint-penetration groove welds were used in all tests. No tests were performed on specimens with gaps greater than $^1/_4$ in. (6 mm).

5. Field Welding

The Specification incorporates AWS D1.1/D1.1M (AWS, 2010) by reference. Surface preparation requirements are defined in that code. The erector is responsible for repair of routine damage and corrosion occurring after fabrication. Welding on coated surfaces demands consideration of quality and safety. Wire brushing has been shown to result in adequate quality welds in many cases. Erector weld procedures accommodate project site conditions within the range of variables normally used on structural steel welding. Welds to material in contact with concrete and welded assemblies in which shrinkage may add up to a substantial dimensional variance may be improved by judicious selection of weld procedure variables and fit up. These conditions are dependent on other variables such as the condition and content of the concrete and the design details of the welded joint. The range of variables permitted in the class of weld procedures considered to be prequalified in the process used by the erector is the range normally used.

CHAPTER N

QUALITY CONTROL AND QUALITY ASSURANCE

N1. SCOPE

Chapter N of the 2010 AISC Specification provides minimum requirements for quality control (QC), quality assurance (QA) and nondestructive testing (NDT) for structural steel systems and steel elements of composite members for buildings and other structures. Minimum observation and inspection tasks deemed necessary to ensure quality structural steel construction are defined.

Chapter N defines a comprehensive system of "Quality Control" requirements on the part of the steel fabricator and erector and similar requirements for "Quality Assurance" on the part of the project owner's representatives when such is deemed necessary to complement the contractor's quality control function. These requirements exemplify recognized principles of developing involvement of all levels of management and the workforce in the quality control process as the most effective method of achieving quality in the constructed product. Chapter N supplements these quality control requirements with quality assurance responsibilities as are deemed suitable for a specific task. The Chapter N requirements follow the same requirements for inspections utilized in the AISC Specification referenced *Structural Welding Code—Steel* (AWS, 2010), hereafter referred to as AWS D1.1/D1.1M, and the RCSC *Specification for Structural Joints Using High-Strength Bolts* (RCSC, 2009), hereafter referred to as the RCSC *Specification*.

Under Section 8 of the AISC *Code of Standard Practice for Steel Buildings and Bridges* (AISC, 2010a), hereafter referred to as the *Code of Standard Practice,* the fabricator or erector is to implement a QC system as part of their normal operations. Those that participate in AISC Quality Certification or similar programs are required to develop QC systems as part of those programs. The engineer of record should evaluate what is already a part of the fabricator's or erector's QC system in determining the quality assurance needs for each project. Where the fabricator's or erector's QC system is considered adequate for the project, including compliance with any specific project needs, the special inspection or quality assurance plan may be modified to reflect this. Similarly, where additional needs are identified, supplementary requirements should be specified.

The terminology adopted for use in Chapter N is intended to provide a clear distinction of fabricator and erector requirements and the requirements of others. The definitions of QC and QA used here are consistent with usage in related industries such as the steel bridge industry and they are used for the purposes of this Specification. It is recognized that these definitions are not the only definitions in use. For example, QC and QA are defined differently in the AISC Quality

Certification program in a fashion that is useful to that program and are consistent with the International Standards Organization (ISO) and the American Society for Quality (ASQ).

For the purposes of this Specification, quality control includes those tasks performed by the steel fabricator and erector that have an effect on quality or are performed to measure or confirm quality. Quality assurance tasks performed by organizations other than the steel fabricator and erector are intended to provide a level of assurance that the product meets the project requirements.

The terms quality control and quality assurance are used throughout this Chapter to describe inspection tasks required to be performed by the steel fabricator and erector and project owner's representatives respectively. The quality assurance tasks are inspections often performed when required by the applicable building code (ABC) or authority having jurisdiction (AHJ), and designated as "Special Inspections," or as otherwise required by the project owner or engineer of record.

Chapter N defines two inspection levels for required inspection tasks and labels them as either "observe" or "perform." This is in contrast to common building code terminology which use or have used the terms "periodic" or "continuous." The reason for this change in terminology reflects the multi-task nature of welding and high-strength bolting operations, and the required inspections during each specific phase. The 2009 *International Building Code* (IBC) (ICC, 2009) requirements for special inspection of structural steel refer in very general terms to "inspection of welding" and "inspection of high-strength bolting." However, welding and high-strength bolting operations are each comprised of multiple tasks. The IBC does not specifically define what the scope of these inspections is to entail during any particular phase of those operations. Instead, Table 1704.3 in the 2009 IBC references AWS D1.1/D1.1M for weld inspections, and the 2005 AISC *Specification for Structural Steel Buildings* (AISC, 2005a) Section M2.5 for high-strength bolting inspection. These referenced documents do provide requirements pertaining to specific inspection tasks.

N2. FABRICATOR AND ERECTOR QUALITY CONTROL PROGRAM

Many quality requirements are common from project to project. Many of the processes used to produce structural steel have an effect on quality and are fundamental and integral to the fabricator's or erector's success. Consistency in imposing quality requirements between projects facilitates more efficient procedures for both.

The construction documents referred to in this Chapter are, of necessity, the versions of the design drawings, specifications, and approved shop and erection drawings that have been released for construction, as defined in the *Code of Standard Practice*. When responses to requests for information (RFI) and change orders exist that modify the construction documents, these also are part of the construction documents. When a building information model is used on the project, it also is a part of the construction documents.

Elements of a quality control program can include a variety of documentation such as policies, internal qualification requirements, and methods of tracking production

progress. Any procedure that is not apparent subsequent to the performance of the work should be considered important enough to be part of the written procedures. Any documents and procedures made available to the quality assurance inspector (QAI) should be considered proprietary and not distributed inappropriately.

The inspection documentation should include the following information:

(1) The product inspected
(2) The inspection that was conducted
(3) The name of the inspector and the time period within which the inspection was conducted
(4) Nonconformances and corrections implemented

Records can include marks on pieces, notes on drawings, process paperwork, or electronic files. A record showing adherence to a sampling plan for pre-welding compliance during a given time period may be sufficient for pre-welding observation inspection.

The level of detail recorded should result in confidence that the product is in compliance with the requirements.

N3. FABRICATOR AND ERECTOR DOCUMENTS

1. Submittals for Steel Construction

The documents listed must be submitted so that the engineer of record (EOR) or the EOR's designee can evaluate that the items prepared by the fabricator or erector meet the EOR's design intent. This is usually done through the submittal of shop and erection drawings. In many cases digital building models are produced in order to develop drawings for fabrication and erection. In lieu of submitting shop and erection drawings, the digital building model can be submitted and reviewed by the EOR for compliance with the design intent. For additional information concerning this process, refer to the *Code of Standard Practice* Appendix A, Digital Building Product Models.

2. Available Documents for Steel Construction

The documents listed must be available for review by the EOR. Certain items are of a nature that submittal of substantial volumes of documentation is not practical, and therefore it is acceptable to have these documents reviewed at the fabricator's or erector's facility by the engineer or designee, such as the QA agency. Additional commentary on some of the documentation listed in this section follows:

(4) This section requires documentation to be available for the fastening of deck. For deck fasteners, such as screws and power fasteners, catalog cuts and/or manufacturers installation instructions are to be available for review. There is no requirement for certification of any deck fastening products.

(8) Because the selection and proper use of welding filler metals is critical to achieving the necessary levels of strength, notch toughness, and quality, the availability for review of welding filler metal documentation and welding procedure specifications (WPSs) is required. This allows a thorough review on the part of the

engineer, and allows the engineer to have outside consultants review these documents, if needed.

(11) The fabricator and erector maintain written records of welding personnel qualification testing. Such records should contain information regarding date of testing, process, WPS, test plate, position, and the results of the testing. In order to verify the six-month limitation on welder qualification, the fabricator and erector should also maintain a record documenting the dates that each welder has used a particular welding process.

(12) The fabricator should consider *Code of Standard Practice* Section 6.1, in establishing material control procedures for structural steel.

N4. INSPECTION AND NONDESTRUCTIVE TESTING PERSONNEL

1. Quality Control Inspector Qualifications

The fabricator or erector determines the qualifications, training and experience required for personnel conducting the specified inspections. Qualifications should be based on the actual work to be performed and should be incorporated into the fabricator's or erector's QC program. Inspection of welding should be performed by an individual who, by training and/or experience in metals fabrication, inspection and testing, is competent to perform inspection of the work. This is in compliance with AWS D1.1/D1.1M subclause 6.1.4. Recognized certification programs are a method of demonstrating some qualifications but they are not the only method nor are they required by Chapter N for quality control inspectors (QCI).

2. Quality Assurance Inspector Qualifications

The quality assurance agency determines the qualifications, training and experience required for personnel conducting the specified QA inspections. This may be based on the actual work to be performed on any particular project. AWS D1.1/D1.1M subclause 6.1.4.1(3) states "An individual who, by training or experience, or both, in metals fabrication, inspection and testing, is competent to perform inspection of the work." Qualification for the QA inspector may include experience, knowledge and physical requirements. These qualification requirements are documented in the QA agency's written practice. AWS B5.1 (AWS, 2003) is a resource for qualifications of a welding inspector.

The use of associate welding inspectors under direct supervision is as permitted in AWS D1.1/D1.1M subclause 6.1.4.3.

3. NDT Personnel Qualifications

NDT personnel should have sufficient education, training and experience in those NDT methods they will perform. ASNT SNT-TC-1a (ASNT, 2006a) and ASNT CP-189 (ASNT, 2006b) prescribe visual acuity testing, topical outlines for training, written knowledge, hands-on skills examinations, and experience levels for the NDT methods and levels of qualification.

As an example, under the provisions of ASNT SNT-TC-1a, an NDT Level II individual should be qualified to set up and calibrate equipment and to interpret and evaluate results with respect to applicable codes, standards and specifications. The

NDT Level II individual should be thoroughly familiar with the scope and limitations of the methods for which they are qualified and should exercise assigned responsibility for on-the-job training and guidance of trainees and NDT Level I personnel. The NDT Level II individual should be able to organize and report the results of NDT tests.

N5. MINIMUM REQUIREMENTS FOR INSPECTION OF STRUCTURAL STEEL BUILDINGS

1. Quality Control

The welding inspection tasks listed in Tables N5.4-1 through N5.4-3 are inspection items contained in AWS D1.1/D1.1M, but have been organized in the tables in a more rational manner for scheduling and implementation using categories of before welding, during welding and after welding. Similarly, the bolting inspection tasks listed in Tables N5.6-1 through N5.6-3 are inspection items contained in the RCSC *Specification*, but have been organized in a similar manner for scheduling and implementation using traditional categories of before bolting, during bolting and after bolting. The details of each table are discussed in Commentary Sections N5.4 and N5.6.

The 2009 *International Building Code* (IBC) (ICC, 2009) makes specific statements about inspecting to "approved construction documents" the original and revised design drawings and specifications as approved by the building official or authority having jurisdiction (AHJ). *Code of Standard Practice* Section 4.2(a), requires the transfer of information from the contract documents (design drawings and project specifications) into accurate and complete shop and erection drawings. Therefore, relevant items in the design drawings and project specifications that must be followed in fabrication and erection should be placed on the shop and erection drawings, or in typical notes issued for the project. Because of this provision, QC inspection may be performed using shop drawings and erection drawings, not the original design drawings.

The applicable referenced standards in construction documents are commonly this standard, the *Specification for Structural Steel Buildings* (ANSI/AISC 360-10), *Code of Standard Practice* (AISC 303-10) (AISC, 2010a), AWS D1.1/D1.1M (AWS, 2010), and the RCSC *Specification* (RCSC, 2009).

2. Quality Assurance

Code of Standard Practice Section 8.5.2 contains the following provisions regarding the scheduling of shop fabrication inspection: "Inspection of shop work by the Inspector shall be performed in the Fabricator's shop to the fullest extent possible. Such inspections shall be timely, in-sequence and performed in such a manner as will not disrupt fabrication operations and will permit the repair of nonconforming work prior to any required painting while the material is still in-process in the fabrication shop."

Similarly, *Code of Standard Practice* Section 8.5.3 states "Inspection of field work shall be promptly completed without delaying the progress or correction of the work."

Code of Standard Practice Section 8.5.1 states that, "The Fabricator and the Erector shall provide the Inspector with access to all places where the work is being performed. A minimum of 24 hours notification shall be given prior to the commencement of work." However, the inspector's timely inspections are necessary for this to be achieved, while the scaffolding, lifts or other means provided by the fabricator or erector for their personnel are still in place or are readily available.

IBC Table 1703.3 item 3 requires material verification of structural steel, including identification markings to conform to the 2005 AISC *Specification for Structural Steel Buildings* (ANSI/AISC 360-05) (AISC, 2005a) Section M5.5 and manufacturers' certified mill (material) test reports. Additionally, the IBC Section 2203.1 states "Identification of structural steel members shall comply with the requirements contained in AISC 360-05. … Steel that is not readily identifiable as to grade from marking and test records shall be tested to determine conformity to such standards."

The 2005 AISC *Specification for Structural Steel Buildings* Section M5.5 states: "Identification of Steel. The fabricator shall be able to demonstrate by a written procedure and by actual practice a method of material identification, visible at least through the 'fit-up' operation, for the main structural elements of each shipping piece." *Code of Standard Practice* Section 6.1.1 contains similar language, with more detailed options.

Code of Standard Practice Section 8.2 states "Material test reports shall constitute sufficient evidence that the mill product satisfies material order requirements. The Fabricator shall make a visual inspection of material that is received from the mill, …" *Code of Standard Practice*, Sections 5.2 and 6.1, address the traceability of material test reports to individual pieces of steel, and the identification requirements for structural steel in the fabrication stage.

The IBC makes specific statements about inspecting to "approved construction documents," and the original and revised design drawings and specifications as approved by the building official or the authority having jurisdiction (AHJ). Because of these IBC provisions, the QAI should inspect using the original and revised design drawings and project specifications. The QAI may also use the shop drawings and erection drawings to assist in the inspection process.

3. Coordinated Inspection

Coordination of inspection tasks may be needed for fabricators in remote locations or distant from the project itself, or for erectors with projects in locations, where inspection by a local firm or individual may not be feasible or where tasks are redundant.

The approval of both the AHJ and EOR is required for quality assurance to rely upon quality control, so there must be a level of assurance provided by the quality activi-

ties that are accepted. It may also serve as an intermediate step short of waiving quality assurance as described in Section N7.

4. Inspection of Welding

AWS D1.1/D1.1M requires inspection, and any inspection task should be done by the fabricator or erector (termed contractor within AWS D1.1/D1.1M) under the terms of subclause 6.1.2.1, as follows:

> Contractor's Inspection. This type of inspection and test shall be performed as necessary prior to assembly, during assembly, during welding, and after welding to ensure that materials and workmanship meet the requirements of the contract documents. Fabrication/erection inspection and testing shall be the responsibility of the Contractor unless otherwise provided in the contract documents.

This is further clarified in subclause 6.1.3.3, which states:

> Inspector(s). When the term inspector is used without further qualification as to the specific inspector category described above, it applies equally to inspection and verification within the limits of responsibility described in 6.1.2.

The basis of Tables N5.4-1, N5.4-2 and N5.4-3 are inspection tasks, quality requirements, and related detailed items contained within AWS D1.1/D1.1M. Commentary Tables C-N5.4-1, C-N5.4-2 and C-N5.4-3 provide specific references to subclauses in AWS D1.1/D1.1M: 2010. In the determination of the task lists, and whether the task is designated "observe" or "perform," the pertinent terms of the following AWS D1.1/D1.1M clauses were used:

> 6.5 Inspection of Work and Records
> 6.5.1 Size, Length, and Location of Welds. The Inspector shall ensure that the size, length, and location of all welds conform to the requirements of this code and to the detail drawings and that no unspecified welds have been added without the approval of the Engineer.
>
> 6.5.2 Scope of Examinations. The Inspector shall, at suitable intervals, observe joint preparation, assembly practice, the welding techniques, and performance of each welder, welding operator, and tack welder to ensure that the applicable requirements of this code are met.
>
> 6.5.3 Extent of Examination. The Inspector shall examine the work to ensure that it meets the requirements of this code. … Size and contour of welds shall be measured with suitable gages. …
>
> C-6.5 Inspection of Work and Records. Except for final visual inspection, which is required for every weld, the Inspector shall inspect the work at suitable intervals to ensure that the requirements of the applicable sections of the code are met. Such inspections, on a sampling basis, shall be prior to assembly, during assembly, and during welding. …

TABLE C-N5.4-1
Inspection Tasks Prior to Welding

Inspection Tasks Prior to Welding	AWS D1.1/D1.1M References*
Welding procedure specifications (WPSs) available	6.3
Manufacturer certifications for welding consumables available	6.2
Material identification (type/grade)	6.2
Welder identification system	6.4 (welder qualification) (identification system not required by AWS D1.1/D1.1M)
Fit-up of groove welds (including joint geometry) • Joint preparation • Dimensions (alignment, root opening, root face, bevel) • Cleanliness (condition of steel surfaces) • Tacking (tack weld quality and location) • Backing type and fit (if applicable)	 6.5.2 5.22 5.15 5.18 5.10, 5.22.1.1
Configuration and finish of access holes	6.5.2, 5.17 (also see Section J1.6)
Fit-up of fillet welds • Dimensions (alignment, gaps at root) • Cleanliness (condition of steel surfaces) • Tacking (tack weld quality and location)	 5.22.1 5.15 5.18
Check welding equipment	6.2, 5.11

*AWS (2010)

Observe tasks are as described in subclauses 6.5.2 and 6.5.3. Subclause 6.5.2 uses the term observe and also defines the frequency to be "at suitable intervals." The Commentary to subclause 6.5.2 further explains that "a sampling basis" is appropriate. Perform tasks are required for each weld by AWS D1.1/D1.1M, as stated in subclause 6.5.1 or 6.5.3, or are necessary for final acceptance of the weld or item. The use of the term perform is based upon the use in AWS D1.1/D1.1M of the phrases "shall examine the work" and "size and contour of welds shall be measured," hence perform items are limited to those functions typically performed at the completion of each weld.

The words "all welds" in subclause 6.5.1 clearly indicate that all welds are required to be inspected for size, length and location in order to ensure conformity. Chapter N follows the same principle in labeling these tasks perform, which is defined as "Perform these tasks for each welded joint or member."

TABLE C-N5.4-2
Inspection Tasks During Welding

Inspection Tasks During Welding	AWS D1.1/D1.1M References*
Use of qualified welders	6.4
Control and handling of welding consumables • Packaging • Exposure control	6.2 5.3.1 5.3.2 (for SMAW), 5.3.3 (for SAW)
No welding over cracked tack welds	5.18
Environmental conditions • Wind speed within limits • Precipitation and temperature	 5.12.1 5.12.2
WPS followed • Settings on welding equipment • Travel speeed • Selected welding materials • Shielding gas type/flow rate • Preheat applied • Interpass temperature maintained (min/max.) • Proper position (F, V, H, OH)	6.3.3, 6.5.2, 5.5, 5.21 5.6, 5.7
Welding techniques • Interpass and final cleaning • Each pass within profile limitations • Each pass meets quality requirements	6.5.2, 6.5.3, 5.24 5.30.1
*AWS (2010)	

The words "suitable intervals" used in subclause 6.5.2 characterize that it is not necessary to inspect these tasks for each weld**,** but as necessary to ensure that the applicable requirements of AWS D1.1/D1.1M are met. Following the same principles and terminology, Chapter N labels these tasks as "observe," which is defined as "Observe these items on a random basis**.**"

The selection of suitable intervals as used in AWS D1.1/D1.1M subclause 6.5.2, or a suitable "sampling basis" as used in subclause C-6.5, is not defined within AWS D1.1/D1.1M, nor is it defined within the IBC or the Specification, other than the AWS statement "to ensure that the applicable requirements of this code are met." The establishment of "at suitable intervals" and an appropriate "sampling basis" is dependent upon the quality control program of the fabricator or erector, the skills and knowledge of the welders themselves, the type of weld, and the importance of the weld. During the initial stages of a project, it may be advisable to have increased levels of observation to establish the effectiveness of the fabricator's or erector's quality control program, but such increased levels need not be maintained for the duration of the project, nor to the extent of inspectors being on site. Rather, an appropriate level of observation intervals can be used which is commensurate with the observed

TABLE C-N5.4-3
Inspection Tasks After Welding

Inspection Tasks After Welding	AWS D1.1/D1.1M References**
Welds cleaned	5.30.1
Size, length and location of welds	6.5.1
Welds meet visual acceptance criteria • Crack prohibition • Weld/base-metal fusion • Crater cross section • Weld profiles • Weld size • Undercut • Porosity	6.5.3 Table 6.1(1) Table 6.1(2) Table 6.1(3) Table 6.1(4), 5.24 Table 6.1(6) Table 6.1(7) Table 6.1(8)
Arc strikes	5.29
k-area*	not addressed in AWS
Backing removed and weld tabs removed (if required)	5.10, 5.31
Repair activities	6.5.3, 5.26
Document acceptance or rejection of welded joint or member	6.5.4, 6.5.5

* *k*-area issues were identified in AISC (1997b). See Commentary Section A3.1c and Section J10.8.
** AWS (2010)

performance of the contractor and their personnel. More inspection may be warranted for weld fit-up and monitoring of welding operations for CJP and PJP groove welds loaded in transverse tension, compared to the time spent on groove welds loaded in compression or shear, or time spent on fillet welds. More time may be warranted observing welding operations for multi-pass fillet welds, where poor quality root passes and poor fit-up may be obscured by subsequent weld beads, when compared to single pass fillet welds.

The terms perform and observe are not to be confused with periodic and continuous used in the 2009 IBC. Both sets of terms establish two levels of inspection. The IBC terms specify whether the inspector is present at all times or not during the course of the work. Chapter N establishes inspection levels for specific tasks within each major inspection area. Perform indicates each item is to be inspected and observe indicates samples of the work are to be inspected. It is likely that the number of inspection tasks will determine whether an inspector has to be present full time but it is not in accordance with Chapter N to let the time an inspector is on site determine how many inspection tasks are done.

AWS D1.1/D1.1M subclause 6.3 states that the contractor's (fabricator/erector) inspector is specifically responsible for the WPS, verification of prequalification or proper qualification, and performance in compliance with the WPS. Quality assur-

ance inspectors monitor welding to make sure QC is effective. For this reason, Tables N5.4-1 and N5.4-2 maintain an inspection task for the QA for these functions. For welding to be performed, and for this inspection work to be done, the WPS must be available to both welder and inspector.

IBC Table 1704.3 item 4 requires material verification of weld filler materials. This is accomplished by observing that the consumable markings correspond to those in the WPS and that certificates of compliance are available for consumables used.

The footnote to Table N5.4-1 states that "The fabricator or erector, as applicable, shall maintain a system by which a welder who has welded a joint or member can be identified. Stamps, if used, shall be the low-stress type." AWS D1.1/D1.1M does not require a welding personnel identification system. However, the inspector must verify the qualifications of welders, including identifying those welders whose work "appears to be below the requirements of this code." Also, if welds are to receive nondestructive testing (NDT), it is essential to have a welding personnel identification system to (a) reduce the rate of NDT for good welders, and (2) increase the rate of NDT for welders whose welds frequently fail NDT. This welder identification system can also benefit the contractor by clearly identifying welders who may need additional training.

The proper fit-up for groove welds and fillet welds prior to welding should first be checked by the fitter and/or welder. Such detailed dimensions should be provided on the shop or erection drawings, as well as included in the WPS. Fitters and welders must be equipped with the necessary measurement tools to ensure proper fit-up prior to welding.

AWS D1.1/D1.1M subclause 6.2 on Inspection of Materials and Equipment states that, "The Contractor's Inspector shall ensure that only materials and equipment conforming to the requirements of this code shall be used." For this reason, the check of welding equipment is assigned to QC only, and is not required for QA.

5. Nondestructive Testing of Welded Joints

5a. Procedures

Buildings are subjected to static loading, unless fatigue is specifically addressed as prescribed in Appendix 3. Specification Section J2 provisions contain exceptions to AWS D1.1/D1.1M.

5b. CJP Groove Weld NDT

For statically loaded structures, AWS D1.1/D1.1M and the Specification have no specific nondestructive testing (NDT) requirements, leaving it to the engineer to determine the appropriate NDT method(s), locations or categories of welds to be tested, and the frequency and type of testing (full, partial or spot), in accordance with AWS D1.1/D1.1M subclause 6.15.

TABLE C-N5.4-4
Descriptions of Risk Categories for Buildings and Other Structures from ASCE/SEI 7*

Risk Category I
Buildings and other structures that represent a low risk to human life in the event of failure
Risk Category II
All buildings and other structures except those listed in Risk Categories I, III and IV
Risk Category III
Buildings and other structures, the failure of which could pose a substantial risk to human life
Buildings and other structures, not included in Risk Category IV, with potential to cause a substantial economic impact and/or mass disruption of day-to-day civilian life in the event of failure
Buildings and other structures not included in Risk Category IV (including, but not limited to, facilities that manufacture, process, handle, store, use, or dispose of such substances as hazardous fuels, hazardous chemicals, hazardous waste, or explosives) containing toxic or explosive substances where their quantity exceeds a threshold quantity established by the authority having jurisdiction and is sufficient to pose a threat to the public if released.
Risk Category IV
Buildings and other structures designated as essential facilities
Buildings and other structures, the failure of which could pose a substantial hazard to the community.
Buildings and other structures (including, but not limited to, facilities that manufacture, process, handle, store, use, or dispose of such substances as hazardous fuels, hazardous chemicals, or hazardous waste) containing sufficient quantities of highly toxic substances where the quantity exceeds a threshold quantity established by the authority having jurisdiction to be dangerous to the public if released and is sufficient to pose a threat to the public if released.
Buildings and other structures required to maintain the functionality of other Risk Category IV structures
*ASCE (2010)

The Specification implements a selection of NDT methods and a rate of ultrasonic testing (UT) based upon a rational system of risk of failure. ASCE *Minimum Design Loads for Buildings and Other Structures*, (ASCE/SEI 7-10), (ASCE, 2010) provides a recognized system of assigning risk to various types of structures.

Complete-joint-penetration (CJP) groove welds loaded in tension applied transversely to their axis are assumed to develop the capacity of the smaller steel element being joined, and therefore have the highest demand for quality. CJP groove welds in compression or shear are not subjected to the same crack propagation risks as welds subjected to tension. Partial-joint-penetration (PJP) groove welds are designed using a limited design strength when in tension, based upon the root condition, and therefore are not subjected to the same high stresses and subsequent crack propagation risk as a CJP groove weld. PJP groove welds in compression or shear are similarly at substantially less risk of crack propagation than CJP groove welds.

Fillet welds are designed using limited strengths, similar to PJP groove welds, and are designed for shear stresses regardless of load application, and therefore do not warrant NDT.

The selection of joint type and thickness ranges for ultrasonic testing (UT) are based upon AWS D1.1/D1.1M subclause 6.20.1, which limits the procedures and standards as stated in Part F of AWS D1.1/D1.1M to groove welds and heat affected zones (HAZ) between the thicknesses of $^{5}/_{16}$ in. and 8 in. (8 mm and 200 mm), inclusive.

ASCE/SEI 7-10, Table 1.5-1, provides four risk categories for buildings and other structures. Commentary Table C-N5.4-4, taken from Table 1-1 (ASCE/SEI 7-10), describes the various risk categories in general terms. The example structures are drawn from the 2005 ASCE *Minimum Design Loads for Buildings and Other Structures* (ASCE, 2005b), which used the term "occupancy category" for a similar purpose, and provided prescriptive definitions of building types and occupancies.

5c. Access Hole NDT

The web-to-flange intersection and the web center of heavy hot-rolled shapes, as well as the interior portions of heavy plates, may contain a coarser grain structure and/or lower notch toughness than other areas of these products. Grinding to bright metal is required by Section M2.2 to remove the hard surface layer, and testing using magnetic particle or dye penetrate methods is performed to assure smooth transitions free of notches or cracks.

5d. Welded Joints Subjected to Fatigue

CJP groove welds in butt joints so designated in Specification Table A-3.1, Sections 5 and 6.1, require that internal soundness be verified using ultrasonic testing (UT) or radiographic testing (RT), meeting the acceptance requirements of AWS D1.1/D1.1M (AWS, 2010) subclause 6.12 or 6.13, as appropriate.

5e. Reduction of Rate of Ultrasonic Testing

For statically loaded structures in Risk Categories III and IV, reduction of the rate of UT from 100% is permitted for individual welders who have demonstrated a high

level of skill, proven after a significant number of their welds have been tested. This provision has been adapted from similar provisions used in the Uniform Building Code (ICBO, 1997) for UT inspection of CJP groove welds in moment frames in areas of high seismic risk.

5f. Increase in Rate of Ultrasonic Testing

For Risk Category II, where 10% of CJP groove welds loaded in transverse tension are tested, an increase in the rate of UT is required for individual welders who have failed to demonstrate a high level of skill, established as a failure rate of more than 5%, after a sufficient number of their welds have been tested. To implement this effectively, and not necessitate the retesting of welds previously deposited by a welder who has a high reject rate established after the 20 welds have been tested, it is suggested that at the start of the work, a higher rate of UT be performed on each welder's completed welds.

6. Inspection of High-Strength Bolting

The 2009 IBC, similar to Section M2.5 of the Specification, incorporates the RCSC *Specification* (RCSC, 2009) by reference. The RCSC *Specification*, like the referenced welding standard, defines bolting inspection requirements in terms of inspection tasks and scope of examinations. The RCSC *Specification* uses the term "routine observation" for the inspection of all pretensioned bolts, further validating the choice of the term "observe" in this chapter of the Specification.

Snug-tightened joints are required to be inspected to ensure that the proper fastener components are used and that the faying surfaces are brought into firm contact during installation of the bolts. The magnitude of the clamping force that exists in a snug-tightened joint is not a consideration and need not be verified.

Pretensioned joints and slip-critical joints are required to be inspected to ensure that the proper fastener components are used and that the faying surfaces are brought into firm contact during the initial installation of the bolts. Pre-installation verification testing is required for all pretensioned bolt installations, and the nature and scope of installation verification will vary based on the installation method used. The following provisions from the RCSC *Specification* serve as the basis for Tables N5.6-1, N5.6-2 and N5.6-3 (underlining added for emphasis of terms):

> **9.2.1. Turn-of-Nut Pretensioning:** The inspector shall <u>observe</u> the pre-installation verification testing required in Section 8.2.1. Subsequently, it shall be insured by <u>routine observation</u> that the bolting crew properly rotates the turned element relative to the unturned element by the amount specified in Table 8.2. Alternatively, when fastener assemblies are match-marked after the initial fit-up of the joint, but prior to pretensioning; visual inspection after pretensioning is permitted in lieu of routine observation.
>
> **9.2.2. Calibrated Wrench Pretensioning:** The *inspector* shall <u>observe</u> the pre-installation verification testing required in Section 8.2.2. Subsequently, it shall be ensured by <u>routine observation</u> that the bolting crew properly applies the calibrated wrench to the turned element. No further evidence of conformity is required.

9.2.3. Twist-Off-Type Tension Control Bolt Pretensioning: The inspector shall observe the pre-installation verification testing required in Section 8.2.3. Subsequently, it shall be ensured by routine observation that the splined ends are properly severed during installation by the bolting crew.

9.2.4. Direct-Tension Indicator Pretensioning: The inspector shall observe the pre-installation verification testing required in Section 8.2.4. Subsequently, but prior to pretensioning, it shall be ensured by routine observation that the appropriate feeler gage is accepted in at least half of the spaces between the protrusions of the direct tension indicator and that the protrusions are properly oriented away from the work.

2009 IBC Table 1704.3 item 1 requires material verification of high-strength bolts, nuts and washers, including manufacturer's certificates of compliance, and verification of the identification markings to conform to the ASTM fastener standards specified in the approved construction documents.

2009 IBC Section 1704.3.3 contains extensive discussion of the requirements for bolting inspection, including verifying fastener components, bolted parts and installation. It includes observation of the fabricator's or erector's pre-installation verification test, and observation of the calibration of wrenches if the calibrated wrench method is being used. It requires verification that the snug-tight condition has been achieved for all joints, and monitoring of installation to verify the proper use of the installation procedure by the bolting crew for pretensioned bolts. The presence of the inspector is dependent upon whether the installation method provides visual evidence of completed installation. Turn-of-nut installation with matchmarking, installation using twist-off bolts, and installation using direct tension indicators provides visual evidence of a completed installation, and therefore "periodic" special inspection is permitted for these methods. Turn-of-nut installation without matchmarking and calibrated wrench installation provides no such visual evidence, and therefore "continuous" special inspection is required, such that the inspector needs to be onsite, although not necessarily watching every bolt or joint as it is being pretensioned.

The concepts of 2009 IBC, as stated above, serve as the basis of the bolting inspection requirements of Section N5.6, along with the provisions of the RCSC *Specification*. In lieu of "continuous" inspection as defined by the IBC, Chapter N uses the term "shall be engaged" to indicate a higher level of observation for these methods.

The inspection provisions of the RCSC *Specification* rely upon observation of the work, hence all tables use Observe for the designated tasks. Commentary Tables C-N5.6-1, C-N5.6-2 and C-N5.6-3 provide the applicable RCSC *Specification* references for inspection tasks prior to, during and after bolting.

7. Other Inspection Tasks

2009 IBC Section 1704A.3.2 requires that the steel frame be inspected to verify compliance with the details shown on the approved construction documents, such as bracing, stiffening, member locations and proper application of joint details at each connection. This is repeated in 2009 IBC Table 1704.3 item 6.

TABLE C-N5.6-1
Inspection Tasks Prior to Bolting

Inspection Tasks Prior to Bolting	Applicable RCSC *Specification* References*
Manufacturer's certifications available for fastener materials	2.1, 9.1
Fasteners marked in accordance with ASTM requirements	Figure C-2.1, 9.1 (also see ASTM standards)
Proper fasteners selected for the joint detail (grade, type, bolt length if threads to be excluded from shear plane)	2.3.2, 2.7.2, 9.1
Proper bolting procedure selected for joint detail	4, 8
Connecting elements, including the appropriate faying surface condition and hole preparation, if specified, meet applicable requirements	3, 9.1, 9.3
Pre-installation verification testing by installation personnel observed and documented for fastener assemblies and methods used	7, 9.2
Proper storage provided for bolts, nuts, washers, and other fastener components	2.2, 8, 9.1

*RCSC (2009)

TABLE C-N5.6-2
Inspection Tasks During Bolting

Inspection Tasks During Bolting	Applicable RCSC *Specification* References*
Fastener assemblies, of suitable condition, placed in all holes and washers (if required) are positioned as required	8.1, 9.1
Joint brought to the snug tight condition prior to the pretensioning operation	8.1, 9.1
Fastener component not turned by the wrench prevented from rotating	8.2, 9.2
Fasteners are pretensioned in accordance with a method approved by RCSC and progressing systematically from most rigid point toward free edges	8.2, 9.2

*RCSC (2009)

TABLE C-N5.6-3
Inspection Tasks After Bolting

Inspection Tasks After Bolting	Applicable RCSC *Specification* References*
Document acceptance or rejection of bolted connections	not addressed by RCSC

*RCSC (2009)

2009 IBC Section 2204.2.1 on anchor rods for steel requires that they be set accurately to the pattern and dimensions called for on the plans. In addition, it is required that the protrusion of the threaded ends through the connected material be sufficient to fully engage the threads of the nuts, but not be greater than the length of the threads on the bolts.

Code of Standard Practice, Section 7.5.1, states that anchor rods, foundation bolts, and other embedded items are to be set by the owner's designated representative for construction. The erector is likely not on site to verify placement, therefore it is assigned solely to the quality assurance inspector (QAI). Because it is not possible to verify proper anchor rod materials and embedment following installation, it is required that the QAI be onsite when the anchor rods are being set.

N6. MINIMUM REQUIREMENTS FOR INSPECTION OF COMPOSITE CONSTRUCTION

This section addresses the inspection of only those elements of composite construction that are structural steel or are frequently within the scope of the fabricator and/or erector (steel deck and field-installed shear stud connectors). The inspection requirements for the other elements of composite construction, such as concrete, formwork, reinforcement, and the related dimensional tolerances, are addressed elsewhere. Three publications of the American Concrete Institute may be applicable. These are *Specifications for Tolerances for Concrete Construction and Commentary* (ACI 117-06) (ACI, 2006), *Specifications for Structural Concrete* (ACI 301-05) (ACI, 2005), and *Building Code Requirements for Structural Concrete and Commentary* (ACI 318-08) (ACI, 2008).

N7. APPROVED FABRICATORS AND ERECTORS

The 2009 IBC Section 1704.2.2 (ICC, 2009) states that:

> Special inspections required by this code are not required where the work is done on the premises of a fabricator registered and approved to perform such work without special inspection.
>
> Approval shall be based upon review of the fabricator's written procedural and quality control manuals and periodic auditing of fabrication practices by an approved special inspection agency.

An example of how these approvals may be made by the building official or authority having jurisdiction (AHJ) is the use of the AISC Certification program. A fabricator certified to the AISC Certification Program for Structural Steel Fabricators, *Standard for Steel Building Structures* (AISC, 2006b), meets the criteria of having a quality control manual, written procedures, and annual onsite audits conducted by AISC's independent auditing company, Quality Management Company, LLC. Similarly, steel erectors may be an AISC Certified Erector or AISC Advanced Certified Steel Erector. The audits confirm that the company has the personnel, knowledge, organization, equipment, experience, capability, procedures and commitment to produce the required quality of work for a given certification category.

APPENDIX 1

DESIGN BY INELASTIC ANALYSIS

Appendix 1 contains provisions for the inelastic analysis and design of structural steel systems, including continuous beams, moment frames, braced frames and combined systems. The Appendix has been modified from the previous Specification to allow for the use of a wider range of inelastic analysis methods, varying from the traditional plastic design approaches to the more advanced nonlinear finite element analysis methods. In several ways, this Appendix represents a logical extension of the direct analysis method of Chapter C, in which second-order elastic analysis is used. The provision for moment redistribution in continuous beams, which is permitted for elastic analysis only, is provided in Section B3.7.

The provisions of this Appendix permit the use of analysis methods that are more sophisticated than those required by Chapter C. The provisions also permit the use of computational analysis (e.g., the finite element method) to replace the Specification equations used to evaluate limit states covered by Chapters D through K. The application of these provisions requires a complete understanding of the provisions of this Appendix as well as the equations they supersede. It is the responsibility of any engineer using these provisions to fully verify the completeness and accuracy of analysis software used for this purpose.

1.1. GENERAL REQUIREMENTS

These requirements directly parallel the general requirements of Chapter C and are further discussed in Commentary Section C1.

Various levels of inelastic analysis are available to the designer (Ziemian, 2010; Chen and Toma, 1994). All are intended to account for the potential redistribution of member and connection forces and moments that are a result of localized yielding as a structural system reaches a strength limit state. At the higher levels they have the ability to model complex forms of nonlinear behavior and detect member and/or frame instabilities well before the formation of a plastic mechanism. Many of the strength design equations used in the Specification for members subject to compression, flexure and combinations thereof were developed using refined methods of inelastic analysis; along with experimental results and engineering judgment (Yura et al., 1978; Kanchanalai and Lu, 1979; Bjorhovde, 1988; Ziemian, 2010). Also, research over the past twenty years has yielded significant advances in procedures for the direct application of second-order inelastic analysis in design (Ziemian, et al., 1992; White and Chen, 1993; Liew, et al., 1993; Ziemian and Miller, 1997; Chen and Kim, 1997). Correspondingly, there has been a steady increase in the inclusion of provisions for inelastic analysis in commercial steel design software, but the level varies widely. Use of any analysis software requires an understanding of the aspects of structural behavior it simulates, the quality of its methods, and whether or not the software's ductility and analysis provisions are equivalent to those of Sections 1.2

and 1.3. There are numerous studies available for verifying the accuracy of the inelastic analysis (Kanchanlai, 1977, El-Zanaty et al., 1980; White and Chen, 1993; Surovek-Maleck and White, 2003; Martinez-Garcia and Ziemian, 2006; Ziemian, 2010).

With this background, it is the intent of this Appendix to allow certain levels of inelastic analysis to be used in place of the Specification design equations as a basis for confirming the adequacy of a member or system. In all cases, the strength limit state behavior being addressed by the corresponding provisions of the Specification needs to be considered. For example, Section E3 provides equations that define the nominal compressive strength corresponding to the flexural buckling of members without slender elements. The strengths determined by these equations account for many factors, which primarily include the initial out-of-straightness of the compression member, *residual stresses* that result from the fabrication process, and the reduction of flexural stiffness due to second-order effects and partial yielding of the cross section. If these factors are directly incorporated within the inelastic analysis and a comparable or higher level of reliability can be assured, then the specific strength equations of Section E3 need not be evaluated. In other words, the inelastic analysis will indicate the limit state of flexural buckling and the design can be evaluated accordingly. On the other hand, suppose that the same inelastic analysis is not capable of modeling flexural-torsional buckling. In this case, the provisions of Section E4 would need to be evaluated. Other examples of strength limit states not detected by the analysis may include, but are not limited to, lateral-torsional buckling strength of flexural members, connection strength, and shear yielding or buckling strengths.

Item 5 in the second paragraph of Section 1.1, General Requirements, states that "…uncertainty in system, member, and connection strength and stiffness…" shall be taken into account. Member and connection reliability requirements are fulfilled by the probabilistically derived resistance factors and load factors of load and resistance factor design of this Specification. System reliability considerations at this time (2010) are still a project-by-project exercise, and no overall methods have as yet been developed for steel building structures. Introduction to the topic of system reliability can be found in textbooks, for example, Ang and Tang (1984), Thoft-Christensen and Murotsu (1986), and Nowak and Collins (2000), as well as in many publications, for example, Buonopane and Schafer (2006).

Because this type of analysis is inherently conducted at ultimate load levels, the provisions of this Appendix are limited to the design basis of Section B3.3 (LRFD).

Per Section B3.9, the serviceability of the design should be assessed with specific requirements given in Chapter L. In satisfying these requirements in conjunction with a design method based on inelastic analysis, consideration should be given to the degree of steel yielding permitted at service loads. Of particular concern are: (a) permanent deflections that may occur due to steel yielding, and (b) stiffness degradation due to yielding and whether this is modeled in the inelastic analysis.

Although the use of inelastic analysis has great potential in earthquake engineering, the specific provisions beyond the general requirements of this Appendix do not apply to seismic design. The two primary reasons for this are:

(1) In defining "equivalent" static loads for use in elastic seismic design procedures, a significant level of yielding and inelastic force redistribution has been assumed and hence, it would not be appropriate to use these loads with a design approach based on inelastic analysis.
(2) The ductility requirements for seismic design based on inelastic analysis are more stringent than those provided in this Specification for nonseismic loads.

Guidelines for the use of inelastic analysis and design for seismic applications are provided in Chapter 16 of the *Minimum Design Loads for Buildings and Other Structures* (ASCE/SEI 7-10) (ASCE, 2010) and *Seismic Rehabilitation of Existing Buildings* (ASCE/SEI 41-06) (ASCE, 2006).

Connections adjacent to plastic hinges must be designed with sufficient strength and ductility to sustain the forces and deformations imposed under the required loads. The practical implementation of this rule is that the applicable requirements of Section B3.6 and Chapter J must be strictly adhered to. These provisions for connection design have been developed from plasticity theory and verified by extensive testing, as discussed in ASCE (1971) and in many books and papers. Thus the connections that meet these provisions are inherently qualified for use in designing structures based on inelastic analysis.

Any method of design that is based on inelastic analysis and satisfies the given general requirements is permitted. These methods may include the use of nonlinear finite element analyses (Crisfield, 1991; Bathe, 1995) that are based on continuum elements to design a single structural component such as a connection, or the use of second-order inelastic frame analyses (Clarke et al., 1992; McGuire et al., 2000) to design a structural system consisting of beams, columns and connections.

Sections 1.2 and 1.3 collectively define provisions that can be used to satisfy the ductility and analysis requirements of Section 1.1. They provide the basis for an approved second-order inelastic frame analysis method. These provisions are not intended to preclude other approaches meeting the requirements of Section 1.1.

1.2. DUCTILITY REQUIREMENTS

Because an inelastic analysis will provide for the redistribution of internal forces due to yielding of structural components such as members and connections, it is imperative that these components have adequate ductility and be capable of maintaining their design strength while accommodating inelastic deformation demands. Factors that affect the inelastic deformation capacity of components include the material properties, the slenderness of cross-sectional elements, and the unbraced length. There are two general methods for assuring adequate ductility: (1) limiting the aforementioned factors, and (2) making direct comparisons of the actual inelastic deformation demands with predefined values of inelastic deformation capacities. The former is provided in Appendix 1. It essentially decouples inelastic local buckling from inelastic lateral-torsional buckling. It has been part of the plastic design provisions for several previous editions of the Specification. Examples of the latter approach in which ductility demands are compared with defined capacities appear in

Galambos (1968b), Kato (1990), Kemp (1996), Gioncu and Petcu (1997), FEMA-350 (FEMA, 2000), ASCE 41-06 (ASCE, 2006), and Ziemian (2010).

1. Material

Extensive past research on the plastic and inelastic behavior of continuous beams, *rigid frames* and connections has amply demonstrated the suitability of steel with yield stress levels up to 65 ksi (450 MPa) (ASCE, 1971).

2. Cross Section

Design by inelastic analysis requires that, up to the peak of the load-deflection curve of the structure, the moments at the plastic hinge locations remain at the level of the plastic moment, which itself should be reduced for the presence of axial force. This implies that the member must have sufficient inelastic rotation capacity to permit the redistribution of additional moments. Sections that are designated as compact in Section B4 have a minimum rotation capacity of approximately $R_{cap} = 3$ (see Figure C-A-1.1) and are suitable for developing plastic hinges. The limiting width-to-thickness ratio designated as λ_p in Table B4.1b and designated as λ_{pd} in this Appendix is the maximum slenderness ratio that will permit this rotation capacity to be achieved. Further discussion of the antecedents of these provisions is given in the Commentary Section B4.

The additional slenderness limits in Equations A-1-1 through A-1-4 apply to cases not covered in Table B4.1b. Equations A-1-1 and A-1-2, which define height-to-thickness ratio limits of webs of wide-flange members and rectangular HSS under combined flexure and compression, have been part of the plastic design requirements since the 1969 Specification and are based on research documented in *Plastic Design in Steel, A Guide and a Commentary* (ASCE, 1971). The equations for the flanges of HSS and other boxed sections (Equation A-1-3) and for circular HSS (Equation A-1-4) are from the *Specification for the Design of Steel Hollow Structural Sections* (AISC, 2000a).

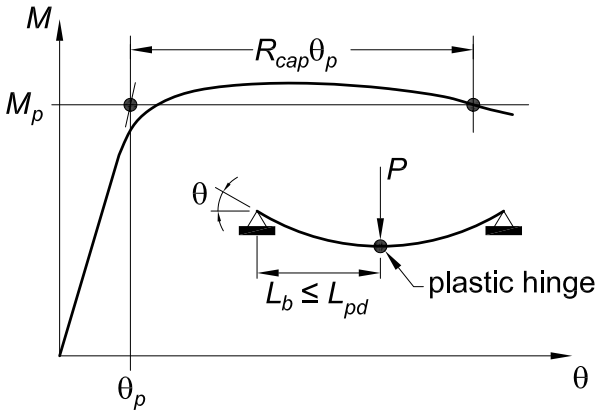

Fig. C-A-1.1. Definition of rotation capacity.

Limiting the slenderness of elements in a cross section to ensure ductility at plastic hinge locations is permissible only for doubly symmetric shapes. In general, single-angle, tee and double-angle sections are not permitted for use in plastic design because the inelastic rotation capacity in the regions where the moment produces compression in an outstanding leg will typically not be sufficient.

3. Unbraced Length

The ductility of structural members with plastic hinges can be significantly reduced by the possibility of inelastic lateral-torsional buckling. In order to provide adequate rotation capacity, such members may need more closely spaced bracing than would be otherwise needed for design in accordance with elastic theory. Equations A-1-5 and A-1-7 define the maximum permitted unbraced length in the vicinity of plastic hinges for wide-flange shapes bent about their major axis, and for rectangular shapes and symmetric box beams, respectively. These equations are a modified version of those appearing in the 2005 AISC Specification (AISC, 2005a), which were based on research reported by Yura et al. (1978). The intent of these equations is to ensure a minimum rotation capacity, $R_{cap} \geq 3$, where R_{cap} is defined as shown in Figure C-A-1.1.

Equations A-1-5 and A-1-7 have been modified to account for nonlinear moment diagrams and for situations in which a plastic hinge does not develop at the brace location corresponding to the larger end moment. The moment M_2 in these equations is the larger moment at the end of the unbraced length, taken as positive in all cases. The moment M_1' is the moment at the opposite end of the unbraced length corresponding to an equivalent linear moment diagram that gives the same target rotation capacity. This equivalent linear moment diagram is defined as follows:

(a) For cases in which the magnitude of the bending moment at any location within the unbraced length, M_{max}, exceeds M_2, the equivalent linear moment diagram is taken as a constant (uniform) moment diagram with a value equal to M_{max} [see Figure C-A-1.2(a)]. Since the equivalent moment diagram is uniform, the appropriate value for L_{pd} can be obtained by using $M_1'/M_2 = +1$.

(b) For cases in which the internal moment distribution along the unbraced length of the beam is indeed linear, or when a linear moment diagram between M_2 and the actual moment, M_1, at the opposite end of the unbraced length gives a larger magnitude moment in the vicinity of M_2 [see Figure C-A-1.2(b)], M_1' is taken equal to the actual moment M_1.

(c) For all other cases in which the internal moment distribution along the unbraced length of the beam is nonlinear and a linear moment diagram between M_2 and the actual moment, M_1, underestimates the moment in the vicinity of M_2, M_1' is defined as the opposite end moment for a line drawn between M_2 and the moment at the middle of the unbraced length, M_{mid} [see Figure C-A-1.2(c)].

The moments M_1 and M_{mid} are individually taken as positive when they cause compression in the same flange as the moment M_2 and negative otherwise.

For conditions in which lateral-torsional buckling cannot occur, such as members with square and round cross sections and members of doubly symmetric shapes

subjected to minor axis bending or sufficient tension, the ductility of the member is not a factor of the unbraced length.

4. Axial Force

The provision in this section restricts the axial force in a compression member to $0.75F_yA_g$ or approximately 80% of the design yield load, ϕ_cF_yA. This provision is a cautionary limitation because insufficient research has been conducted to ensure that sufficient inelastic rotation capacity remains in members subject to high levels of axial force.

1.3. ANALYSIS REQUIREMENTS

For all structural systems with members subject to axial force, the equations of equilibrium must be formulated on the geometry of the deformed structure. The use of second-order inelastic analysis to determine load effects on members and connections is discussed in the *Guide to Stability Design Criteria for Metal Structures* (Ziemian, 2010). Textbooks [for example, Chen and Lui (1991), Chen and Sohal (1995), and McGuire et al. (2000)] present basic approaches to inelastic analysis, as well as worked examples and computer software for detailed study of the subject.

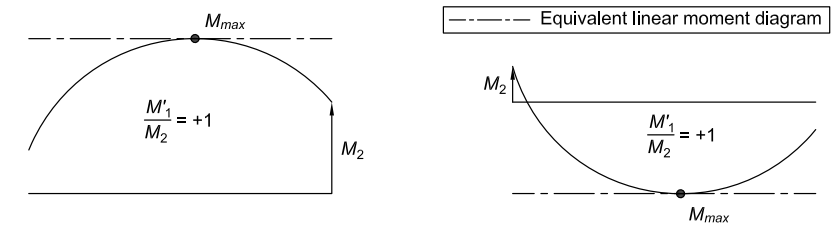

(a) M_{max} *occurs within* L_b

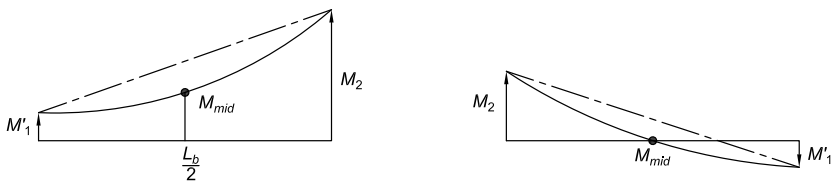

(b) $M_{mid} \le (M_1 + M_2)/2$

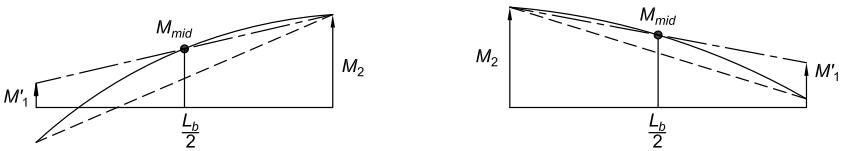

(c) $M_{mid} > (M_1 + M_2)/2$

Fig. C-A-1.2. Equivalent linear moment diagram used to calculate M'_1.

Continuous, braced beams not subject to axial loads can be designed by first-order inelastic analysis (traditional plastic analysis and design). *First-order plastic analysis* is treated in ASCE (1971), in steel design textbooks [for example, Salmon et al. (2008)], and in textbooks dedicated entirely to plastic design [for example, Beedle (1958), Horne and Morris (1982), Bruneau et al. (1998), and Wong (2009)]. Tools for plastic analysis of continuous beams are readily available to the designer from these and other books that provide simple ways of calculating plastic mechanism loads. It is important to note that such methods use LRFD load combinations, either directly or implicitly, and therefore should be modified to include a reduction in the plastic moment capacity of all members by a factor of 0.9. First-order inelastic analysis may also be used in the design of continuous steel-concrete composite beams. Design limits and ductility criteria for both the positive and negative plastic moments are given by Oehlers and Bradford (1995).

1. Material Properties and Yield Criteria

This section provides an accepted method for including uncertainty in system, member, and connection strength and stiffness. The reduction in yield strength and member stiffness is equivalent to the reduction of member strength associated with the AISC resistance factors used in elastic design. In particular, the factor of 0.90 is based on the member and component resistance factors of Chapters E and F, which are appropriate when the structural system is composed of a single member and in cases where the system resistance depends critically on the resistance of a single member. For systems where this is not the case, the use of such a factor is conservative. The reduction in stiffness will contribute to larger deformations and in turn, increased second-order effects.

The inelastic behavior of most structural members is primarily the result of normal stresses in the direction of the longitudinal axis of the member equaling the yield strength of the material. Therefore the normal stresses produced by the axial force and major and minor axis bending moments should be included in defining the plastic strength of member cross sections (Chen and Atsuta, 1976).

Modeling of *strain hardening* that results in strengths greater than the plastic strength of the cross section is not permitted.

2. Geometric Imperfections

Because initial geometric imperfections may affect the nonlinear behavior of a structural system, it is imperative that they be included in the second-order analysis. Discussion on how frame out-of-plumbness may be modeled is provided in Commentary Section C2.2. Additional information is provided in ECCS (1984), Bridge and Bizzanelli (1997), Bridge (1998), and Ziemian (2010).

Member out-of-straightness should be included in situations in which it can have a significant impact on the inelastic behavior of the structural system. The significance of such effects is a function of (1) the relative magnitude of the member's applied axial force and bending moments, (2) whether the member is subject to single or reverse curvature bending, and (3) the slenderness of the member.

In all cases, initial geometric imperfections should be modeled to represent the potential maximum destabilizing effects.

3. Residual Stresses and Partial Yielding Effects

Depending on the ratio of a member's plastic section modulus, Z, to its elastic section modulus, S, the partial yielding that occurs before the formation of a plastic hinge may significantly reduce the flexural stiffness of the member. This is particularly the case for minor axis bending of I-shapes. Any change to bending stiffness may result in force redistribution and increased second-order effects, and thus needs to be considered in the inelastic analysis.

The impact of partial yielding is further accentuated by the presence of thermal residual stresses, which are due to nonuniform cooling during the manufacturing and fabrication processes. Because the relative magnitude and distribution of these stresses is dependent on the process and the member's cross-section geometry, it is not possible to specify a single idealized pattern for use in all levels of inelastic analysis. Residual stress distributions used for common hot-rolled doubly symmetric shapes are provided in the literature, including ECCS (1984) and Ziemian (2010). In most cases, the maximum compressive residual stress is 30% to 50% of the yield stress.

The effects of partial yielding and residual stresses may either be included directly in inelastic distributed-plasticity analyses or by modifying plastic hinge based methods of analysis. An example of the latter is provided by Ziemian and McGuire (2002) and Ziemian et al. (2008), in which the flexural stiffness of members are reduced according to the amount of axial force and major and minor axis bending moments being resisted. The Specification permits the use of a similar strategy, which is provided in Section C2.3 and described in the Commentary to that section. If the residual stress effect is not included in the analysis and the provisions of Section C2.3 are employed, the stiffness reduction factor of 0.9 specified in Section 1.3.1 (which accounts for uncertainty in strength and stiffness) must be changed to 0.8. The reason for this is that the equations given in Section C2.3 assume that the analysis does not account for partial yielding. Also, to avoid cases in which the use of Section C2.3 may be unconservative, it is further required that the yield or plastic hinge criterion used in the inelastic analysis be defined by the interaction Equations H1-1a and H1-1b. This condition on cross section strength does not have to be met when the residual stress and partial yielding effects are accounted for in the analysis.

APPENDIX 2
DESIGN FOR PONDING

Ponding stability is determined by ascertaining that the conditions of Equations A-2-1 and A-2-2 of Appendix 2 are fulfilled. These equations provide a conservative evaluation of the stiffness required to avoid runaway deflection, giving a safety factor of four against ponding instability.

Since Equations A-2-1 and A-2-2 yield conservative results, it may be advantageous to perform a more detailed stress analysis to check whether a roof system that does not meet the above equations is still safe against ponding failure.

For the purposes of Appendix 2, *secondary members* are the beams or joists that directly support the distributed ponding loads on the roof of the structure, and *primary members* are the beams or girders that support the concentrated reactions from the secondary members framing into them. Representing the deflected shape of the primary and critical secondary member as a half-sine wave, the weight and distribution of the ponded water can be estimated, and, from this, the contribution that the deflection of each of these members makes to the total ponding deflection can be expressed as follows (Marino, 1966):

For the primary member

$$\Delta_w = \frac{\alpha_p \Delta_o \left[1 + 0.25\pi\alpha_s + 0.25\pi\rho(1+\alpha_s)\right]}{1 - 0.25\pi\alpha_p\alpha_s} \qquad \text{(C-A-2-1)}$$

For the secondary member

$$\delta_w = \frac{\alpha_s \delta_o \left[1 + \frac{\pi^3}{32}\alpha_p + \frac{\pi^2}{8\rho}(1+\alpha_p) + 0.185\alpha_s\alpha_p\right]}{1 - 0.25\pi\alpha_p\alpha_s} \qquad \text{(C-A-2-2)}$$

In these expressions Δ_o and δ_o are, respectively, the primary and secondary beam deflections due to loading present at the initiation of ponding, and

$\alpha_p = C_p / (1 - C_p)$, $\alpha_s = C_s / (1 - C_s)$, and $\rho = \delta_o / \Delta_o = C_s / C_p$

$\alpha_s = C_s / (1 - C_s)$

$\rho = \delta_o / \Delta_o = C_s / C_p$

Using the above expressions for Δ_w and δ_w, the ratios Δ_w/Δ_o and δ_w/δ_o can be computed for any given combination of primary and secondary beam framing using the computed values of coefficients C_p and C_s, respectively, defined in the Specification.

Even on the basis of unlimited elastic behavior, it is seen that the ponding deflections would become infinitely large unless

$$\left(\frac{C_p}{1-C_p}\right)\left(\frac{C_s}{1-C_s}\right) < \frac{4}{\pi} \qquad \text{(C-A-2-3)}$$

Since elastic behavior is not unlimited, the effective bending strength available in each member to resist the stress caused by ponding action is restricted to the difference between the yield stress of the member and the stress, f_o, produced by the total load supported by it before consideration of ponding is included.

Note that elastic deflection is directly proportional to stress. The admissible amount of ponding in either the primary or critical (midspan) secondary member, in terms of the applicable ratio, Δ_w/Δ_o and δ_w/δ_o, can be represented as $(0.8F_y - f_o)/f_o$, assuming a safety factor of 1.25 against yielding under the ponding load. Substituting this expression for Δ_w/Δ_o and δ_w/δ_o, and combining with the foregoing expressions for Δ_w and δ_w, the relationship between the critical values for C_p and C_s and the available elastic bending strength to resist ponding is obtained. The curves presented in Figures A-2.1 and A-2.2 are based upon this relationship. They constitute a design aid for use when a more exact determination of required flat roof framing stiffness is needed than given by the Specification provision that $C_p + 0.9C_s \le 0.25$.

Given any combination of primary and secondary framing, the stress index is computed as follows:

For the primary member

$$U_p = \left(\frac{0.8F_y - f_o}{f_o}\right)_p \qquad \text{(C-A-2-4)}$$

For the secondary member

$$U_s = \left(\frac{0.8F_y - f_o}{f_o}\right)_s \qquad \text{(C-A-2-5)}$$

where

f_o = the stress due to $D + R$ (D = nominal dead load, R = nominal load due to rainwater or ice exclusive of the ponding contribution), ksi (MPa)

Depending upon geographic location, this loading should include such amount of snow as might also be present, although ponding failures have occurred more frequently during torrential summer rains when the rate of precipitation exceeded the rate of drainage runoff and the resulting hydraulic gradient over large roof areas caused substantial accumulation of water some distance from the eaves.

Given the size, spacing and span of a tentatively selected combination of primary and secondary beams, for example, one may enter Figure A-2.1 at the level of the computed stress index, U_p, determined for the primary beam; move horizontally to the computed C_s value of the secondary beams; then move downward to the abscissa

scale. The combined stiffness of the primary and secondary framing is sufficient to prevent ponding if the flexibility coefficient read from this latter scale is larger than the value of C_p computed for the given primary member; if not, a stiffer primary or secondary beam, or combination of both, is required.

If the roof framing consists of a series of equally spaced wall-bearing beams, the beams would be considered as secondary members, supported on an infinitely stiff primary member. For this case, one would use Figure A-2.2. The limiting value of C_s would be determined by the intercept of a horizontal line representing the U_s value and the curve for $C_p = 0$.

The ponding deflection contributed by a metal deck is usually such a small part of the total ponding deflection of a roof panel that it is sufficient merely to limit its moment of inertia to 0.000025 (3 940) times the fourth power of its span length [in.^{4} per foot (mm^4 per meter) of width normal to its span], as provided in Equation A-2-2. However, the stability against ponding of a roof consisting of a metal roof deck of relatively slender depth-to-span ratio, spanning between beams supported directly on columns, may need to be checked. This can be done using Figures A-2.1 or A-2.2 with the following computed values:

U_p = stress index for the supporting beam
U_s = stress index for the roof deck
C_p = flexibility coefficient for the supporting beams
C_s = flexibility coefficient for 1-ft (0.305-m) width of the roof deck ($S = 1.0$)

Since the shear rigidity of the web system is less than that of a solid plate, the moment of inertia of steel joists and trusses should be taken as somewhat less than that of their chords (Heinzerling, 1987).

APPENDIX 3
DESIGN FOR FATIGUE

When the limit state of fatigue is a design consideration, its severity is most significantly affected by the number of load applications, the magnitude of the stress range, and the severity of the stress concentrations associated with particular details. Issues of fatigue are not normally encountered in building design; however, when encountered and if the severity is great enough, fatigue is of concern and all provisions of Appendix 3 must be satisfied.

3.1. GENERAL PROVISIONS

In general, members or connections subject to less than a few thousand cycles of loading will not constitute a fatigue condition except possibly for cases involving full reversal of loading and particularly sensitive categories of details. This is because the applicable cyclic allowable stress range will be limited by the static allowable stress. At low levels of cyclic tensile stress, a point is reached where the stress range is so low that fatigue cracking will not initiate regardless of the number of cycles of loading. This level of stress is defined as the *fatigue threshold*, F_{TH}.

Extensive test programs using full-size specimens, substantiated by theoretical stress analysis, have confirmed the following general conclusions (Fisher et al., 1970; Fisher et al., 1974):

(1) Stress range and notch severity are the dominant stress variables for welded details and beams;
(2) Other variables such as minimum stress, mean stress and maximum stress are not significant for design purposes; and
(3) Structural steels with a specified minimum yield stress of 36 to 100 ksi (250 to 690 MPa) do not exhibit significantly different fatigue strengths for given welded details fabricated in the same manner.

3.2. CALCULATION OF MAXIMUM STRESSES AND STRESS RANGES

Fluctuation in stress that does not involve tensile stress does not cause crack propagation and is not considered to be a fatigue situation. On the other hand, in elements of members subject solely to calculated compressive stress, fatigue cracks may initiate in regions of high tensile *residual stress*. In such situations, the cracks generally do not propagate beyond the region of the residual tensile stress, because the residual stress is relieved by the crack. For this reason, stress ranges that are completely in compression need not be investigated for fatigue. For cases involving cyclic reversal of stress, the calculated stress range must be taken as the sum of the compressive stress and the tensile stress caused by different directions or patterns of the applied live load.

3.3. PLAIN MATERIAL AND WELDED JOINTS

Fatigue resistance has been derived from an exponential relationship between the number of cycles to failure, N, and the stress range, S_r, called an *S-N* relationship, of the form

$$N = \frac{C_f}{S_r^n} \qquad \text{(C-A-3-1)}$$

The general relationship is often plotted as a linear log-log function (Log N = $A - n$ Log S_r). Figure C-A-3.1 shows the family of fatigue resistance curves identified as Categories A, B, B′, C, C′, D, E and E′. These relationships were established based on an extensive database developed in the United States and abroad (Keating and Fisher, 1986). The allowable stress range has been developed by adjusting the coefficient, C_f, so that a design curve is provided that lies two standard deviations of the standard error of estimate of the fatigue cycle life below the mean *S-N* relationship of the actual test data. These values of C_f correspond to a probability of failure of 2.5% of the design life.

Prior to the 1999 AISC *Load and Resistance Factor Design Specification for Structural Steel Buildings* (AISC, 2000b), stepwise tables meeting the above criteria of cycles of loading, stress categories, and allowable stress ranges were provided in the Specifications. A single table format (Table A-3.1) was introduced in the 1999 AISC LRFD Specification that provides the stress categories, ingredients for the applicable equation, and information and examples including the sites of concern for potential crack initiation (AISC, 2000b).

Table A-3.1 is organized into eight sections of general conditions for fatigue design, as follows:

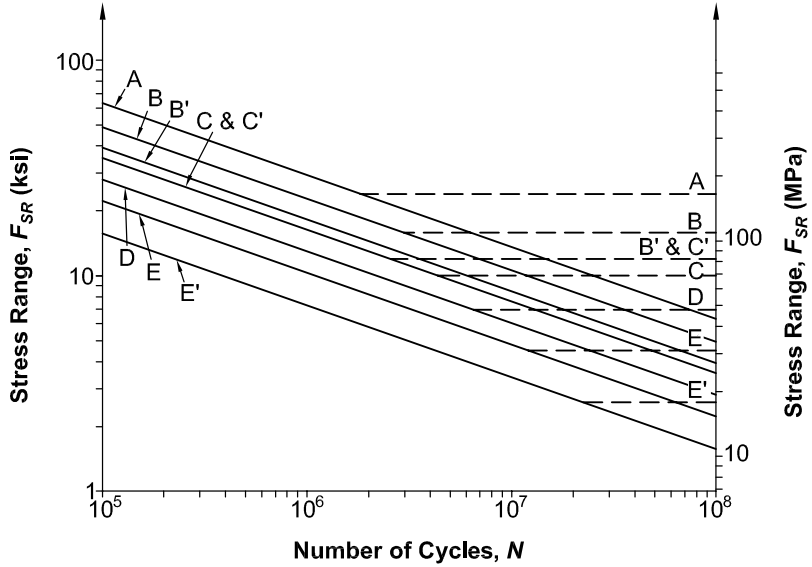

Fig. C-A-3.1. Fatigue resistance curves.

- Section 1 provides information and examples for the steel material at copes, holes, cutouts or as produced.
- Section 2 provides information and examples for various types of mechanically fastened joints including eyebars and pin plates.
- Section 3 provides information related to welded connections used to join built-up members, such as longitudinal welds, access holes and reinforcements.
- Section 4 deals only with longitudinal load carrying fillet welds at shear splices.
- Section 5 provides information for various types of groove and fillet welded joints that are transverse to the applied cyclic stress.
- Section 6 provides information on a variety of groove welded attachments to flange tips and web plates as well as similar attachments connected with either fillet or partial-joint-penetration groove welds.
- Section 7 provides information on several short attachments to structural members.
- Section 8 collects several miscellaneous details such as shear connectors, shear on the throat of fillet, plug and slot welds, and their impact on base metal. It also provides for tension on the stress area of various bolts, threaded anchor rods, and hangers.

A similar format and consistent criteria are used by other specifications.

When fabrication details involving more than one stress category occur at the same location in a member, the stress range at that location must be limited to that of the most restrictive category. The need for a member larger than required by static loading will often be eliminated by locating notch-producing fabrication details in regions subject to smaller ranges of stress.

A detail not explicitly covered before 1989 (AISC, 1989) was added in the 1999 AISC LRFD Specification to cover tension-loaded plate elements connected at their end by transverse partial-joint-penetration groove or fillet welds in which there is more than a single site for the initiation of fatigue cracking, one of which will be more critical than the others depending upon welded joint type and size and material thickness (Frank and Fisher, 1979). Regardless of the site within the joint at which potential crack initiation is considered, the allowable stress range provided is applicable to connected material at the toe of the weld.

3.4. BOLTS AND THREADED PARTS

The fatigue resistance of bolts subject to tension is predictable in the absence of pretension and prying action; provisions are given for such nonpretensioned details as hanger rods and anchor rods. In the case of pretensioned bolts, deformation of the connected parts through which pretension is applied introduces prying action, the magnitude of which is not completely predictable (Kulak et al., 1987). The effect of prying is not limited to a change in the average axial tension on the bolt but includes bending in the threaded area under the nut. Because of the uncertainties in calculating prying effects, definitive provisions for the allowable stress range for bolts subject to applied axial tension are not included in this Specification. To limit the uncertainties regarding prying action on the fatigue of pretensioned bolts in details which introduce prying, the allowable stress range provided in Table A-3.1 is appropriate for extended *cyclic loading* only if the prying induced by the applied load is small.

Nonpretensioned fasteners are not permitted under this Specification for joints subject to cyclic shear forces. Bolts installed in joints meeting all the requirements for slip-critical connections survive unharmed when subject to cyclic shear stresses sufficient to fracture the connected parts; provisions for such bolts are given in Section 2 of Table A-3.1.

3.5. SPECIAL FABRICATION AND ERECTION REQUIREMENTS

It is essential that when longitudinal backing bars are to be left in place, they be continuous or spliced using flush-ground complete-joint-penetration groove welds before attachment to the parts being joined. Otherwise, the transverse nonfused section constitutes a crack-like defect that can lead to premature fatigue failure or even *brittle fracture* of the built-up member.

In transverse joints subjected to tension a lack-of-fusion plane in T-joints acts as an initial crack-like condition. In groove welds, the root at the backing bar often has discontinuities that can reduce the fatigue resistance of the connection. Removing the backing, back gouging the joint and rewelding eliminates the undesirable discontinuities.

The addition of contoured fillet welds at transverse complete-joint-penetration groove welds in T- and corner joints and at reentrant corners reduces the stress concentration and improves fatigue resistance.

Experimental studies on welded built-up beams demonstrated that if the surface roughness of flame-cut edges was less than 1,000 μin. (25 μm), fatigue cracks would not develop from the flame-cut edge but from the longitudinal fillet welds connecting the beam flanges to the web (Fisher et al., 1970, 1974). This provides stress category B fatigue resistance without the necessity for grinding flame-cut edges.

Reentrant corners at cuts, copes and weld access holes provide a stress concentration point that can reduce fatigue resistance if discontinuities are introduced by punching or thermal cutting. Reaming sub-punched holes and grinding the thermally cut surface to bright metal prevents any significant reduction in fatigue resistance.

The use of run-off tabs at transverse butt-joint groove welds enhances weld soundness at the ends of the joint. Subsequent removal of the tabs and grinding of the ends flush with the edge of the member removes discontinuities that are detrimental to fatigue resistance.

APPENDIX 4

STRUCTURAL DESIGN FOR FIRE CONDITIONS

4.1. GENERAL PROVISIONS

Appendix 4 provides structural engineers with criteria for designing steel-framed building systems and components, including columns, and floor and truss assemblies, for fire conditions. Additional guidance is provided in this Commentary. Compliance with the performance objective in Section 4.1.1 can be demonstrated by either structural analysis or component qualification testing.

Thermal expansion and progressive decrease in strength and stiffness are the primary structural responses to elevated temperatures that may occur during fires. An assessment of a design of building components and systems based on structural mechanics that allows designers to address the fire-induced restrained thermal expansions, deformations and material degradation at elevated temperatures can lead to a more robust structural design for fire conditions.

4.1.1. Performance Objective

The performance objective underlying the provisions in this Specification is that of life safety. Fire safety levels should depend on the building occupancy, height of the building, the presence of active fire mitigation measures, and the effectiveness of fire-fighting. Three limit states exist for elements serving as fire barriers (compartment walls and floors): (1) heat transmission leading to unacceptable rise of temperature on the unexposed surface; (2) breach of barrier due to cracking or loss of integrity; and (3) loss of load-bearing capacity. In general, all three must be considered by the engineer to achieve the desired performance. These three limit states are interrelated in fire-resistant design. For structural elements that are not part of a separating element, the governing limit state is loss of load-bearing capacity.

Specific performance objectives for a facility are determined by the stakeholders in the building process, within the context of the above general performance objective and limit states. In some instances, applicable building codes may stipulate that steel in buildings of certain occupancies and heights be protected by fire-resistant materials or assemblies to achieve specified performance goals.

4.1.2. Design by Engineering Analysis

The strength design criteria for steel beams and columns at elevated temperatures have been revised from the 2005 *Specification for Structural Steel Buildings* (AISC, 2005a) to reflect recent research (Tagaki and Deierlein, 2007). These strength equations do not transition smoothly to the strength equations used to design steel members under ambient conditions. The practical implications of the discontinuity are minor, as the temperatures in the structural members during a

fully developed fire are far in excess of the temperatures at which this discontinuity might otherwise be of concern in design. Nevertheless, to avoid the possibility of misinterpretation, the scope of applicability of the analysis methods in Section 4.2 of Appendix 4 is limited to temperatures above 400 °F (204 °C).

Structural behavior under severe fire conditions is highly nonlinear in nature as a result of the constitutive behavior of materials at elevated temperatures and the relatively large deformations that may develop in structural systems at sustained elevated temperatures. As a result of this behavior, it is difficult to develop design equations to ensure the necessary level of structural performance during severe fires using elastically based ASD methods. Accordingly, structural design for fire conditions by analysis should be performed using LRFD methods, in which the nonlinear structural actions arising during severe fire exposures and the temperature-dependent design strengths can be properly taken into account.

4.1.4. Load Combinations and Required Strength

Fire safety measures are aimed at three levels: (1) to prevent the outbreak of fires through elimination of ignition sources or hazardous practices; (2) to prevent uncontrolled fire development and flashover through early detection and suppression; and (3) to prevent loss of life or structural collapse through fire protection systems, compartmentation, exit ways, and provision of general structural integrity and other passive measures. Specific structural design provisions to check structural integrity and risk of progressive failure due to severe fires can be developed from principles of structural reliability theory (Ellingwood and Leyendecker, 1978; Ellingwood and Corotis, 1991).

The limit state probability of failure due to fire can be written as

$$P(F) = P(F|D,I)\,P(D|I)\,P(I) \qquad \text{(C-A-4-1)}$$

where $P(I)$ = probability of ignition, $P(D|I)$ = probability of development of a structurally significant fire, and $P(F|D,I)$ = probability of failure, given the occurrence of the two preceding events. Measures taken to reduce $P(I)$ and $P(D|I)$ are mainly nonstructural in nature. Measures taken by the structural engineer to design fire resistance into the structure impact the term $P(F|D,I)$.

The development of structural design requirements requires a target reliability level, reliability being measured by $P(F)$ in Equation C-A-4-1. Analysis of reliability of structural systems for gravity dead and live load (Galambos et al., 1982) suggests that the limit state probability of individual steel members and connections is on the order of 10^{-5} to 10^{-4} per year. For redundant steel frame systems, $P(F)$ is on the order of 10^{-6} to 10^{-5}. The *de minimis* risk, that is, the level below which the risk is of regulatory or legal concern and the economic or social benefits of risk reduction are small, is on the order of 10^{-7} to 10^{-6} per year (Pate-Cornell, 1994). If $P(I)$ is on the order of 10^{-4} per year for typical buildings and $P(D|I)$ is on the order of 10^{-2} for office or commercial buildings in urban areas with suppression systems or other protective measures, then $P(F|D,I)$ should be approximately 0.1 to ascertain that the risk due to structural failure caused by fire is socially acceptable.

The use of first-order structural reliability analysis based on this target (conditional) limit state probability leads to the gravity load combination presented as Equation A-4-1. Load combination Equation A-4-1 is similar to Equation 2.5-1 that appears in ASCE/SEI 7-10 (ASCE, 2010), where the probabilistic bases for load combinations for extraordinary events is explained in detail. The factor 0.9 is applied to the dead load when the effect of the dead load is to stabilize the structure; otherwise, the factor 1.2 is applied. The companion action load factors on L and S in that equation reflect the fact that the probability of a coincidence of the peak time-varying load with the occurrence of a fire is negligible (Ellingwood and Corotis, 1991).

The overall stability of the structural system is checked by considering the effect of a small notional lateral load equal to 0.2% of the story gravity force, as defined in Section C2.2, acting in combination with the gravity loads. The required strength of the structural component or system designed using load combination A-4-1 is on the order of 60% to 70% of the required strength under full gravity or wind load at normal temperature.

4.2. STRUCTURAL DESIGN FOR FIRE CONDITIONS BY ANALYSIS

4.2.1. Design-Basis Fire

Once a fuel load has been agreed upon for the occupancy, the designer should demonstrate the effect of various fires on the structure by assessing the temperature-time relationships for various ventilation factors. These relations may result in different structural responses, and it is useful to demonstrate the capability of the structure to withstand such exposures. The effects of a localized fire should also be assessed to ascertain that local damage is not excessive. Based on these results, connections and edge details can be specified to provide a structure that is sufficiently robust.

4.2.1.1. Localized Fire

Localized fires may occur in large open spaces, such as the pedestrian area of covered malls, concourses of airport terminals, warehouses, and factories, where fuel packages are separated by large aisles or open spaces. In such cases, the radiant heat flux can be estimated by a point source approximation, requiring the heat release rate of the fire and separation distance between the center of the fuel package and the closest surface of the steelwork. The heat release rate can be determined from experimental results or may be estimated if the mass loss rate per unit floor area occupied by the fuel is known. Otherwise, a steady-state fire may be assumed.

4.2.1.2. Post-Flashover Compartment Fires

Caution should be exercised when determining temperature-time profiles for spaces with high aspect ratios, for example, 5:1 or greater, or for large spaces; for example, those with an open (or exposed) floor area in excess of 5,000 ft^2 (465 m^2). In such cases, it is unlikely that all combustibles will burn in the space simultaneously. Instead, burning will be most intense in, or perhaps limited to,

the combustibles nearest to a ventilation source. For modest-sized compartments with low aspect ratios, the temperature history of the design fire can be determined by algebraic equations or computer models, such as those described in the SFPE *Handbook of Fire Protection Engineering* (SFPE, 2002).

Caution should be exercised when determining the fire duration for spaces with high aspect ratios, for example, 5:1 or greater, or for large spaces, for example, those with a floor area in excess of 5,000 ft^2 (465 m^2). The principal difficulty lies in obtaining a realistic estimate for the mass loss rate, given that all combustibles within the space may not be burning simultaneously. Failure to recognize uneven burning will result in an overestimation of the mass burning rate and an underestimation of the fire duration by a significant margin. Note: some computation methods may implicitly determine the duration of the fire, in which case the calculation of mass loss rate is unnecessary.

Where a parametric curve is used to define a post-flashover fire, the duration is determined by means of the fuel versus ventilation provisions, not explicitly by loss of mass. This clause should not limit the use of temperature-time relationships to those where duration is calculated, as stated above, as these tend to be localized fires and external fire.

4.2.1.3. Exterior Fires

A design guide is available for determining the exposure resulting from an exterior fire (AISI, 1979).

4.2.1.4. Active Fire Protection Systems

Due consideration should be given to the reliability and effectiveness of active fire protection systems when describing the design-basis fire. When an automatic sprinkler system is installed, the total fuel load may be reduced by up to 60% [Eurocode 1 (CEN, 1991)]. The maximum reduction in the fuel load should be considered only when the automatic sprinkler system is considered to be of the highest reliability; for example, reliable and adequate water supply, supervision of control valves, regular schedule for maintenance of the automatic sprinkler system developed in accordance with NFPA (2002a), or alterations of the automatic sprinkler system are considered any time alterations for the space are considered.

For spaces with automatic smoke and heat vents, computer models are available to determine the smoke temperature (SFPE, 2002). Reduction in the temperature profile as a result of smoke and heat vents should only be considered for reliable installations of smoke and heat vents. As such, a regular maintenance schedule for the vents needs to be established in accordance with NFPA (2002b).

4.2.2. Temperatures in Structural Systems under Fire Conditions

The heat transfer analysis may range from one-dimensional analyses where the steel is assumed to be at uniform temperature to three-dimensional analyses. The uniform temperature assumption is appropriate in a "lumped heat capacity analysis" where a steel column, beam or truss element is uniformly heated along the entire length and around the entire perimeter of the exposed section and the

protection system is uniform along the entire length and around the entire perimeter of the section. In cases with nonuniform heating or where different protection methods are used on different sides of the column, a one-dimensional analysis should be conducted for steel column assemblies. Two-dimensional analyses are appropriate for beams, bar joists or truss elements supporting floor or roof slabs.

Heat transfer analyses should consider changes in material properties with increasing temperature for all materials included in the assembly. This may be done in the lumped heat capacity analysis using an effective property value, determined at a temperature near the estimated mid-point of the temperature range expected to be experienced by that component over the duration of the exposure. In the one- and two-dimensional analyses, the variation in properties with temperature should be explicitly included.

The boundary conditions for the heat transfer analysis shall consider radiation heat transfer in all cases and convection heat transfer if the exposed element is submerged in the smoke or is being subjected to flame impingement. The presence of fire resistive materials in the form of insulation, heat screens, or other protective measures shall be taken into account, if appropriate.

Lumped Heat Capacity Analysis. This first-order analysis to predict the temperature rise of steel structural members can be conducted using algebraic equations iteratively. This approach assumes that the steel member has a uniform temperature, applicable to cases where the steel member is unprotected or uniformly protected (on all sides), and is exposed to fire around the entire perimeter of the assembly containing the steel member. Caution should be used when applying this method to steel beams supporting floor and roof slabs, as the approach will overestimate the temperature rise in the beam. In addition, where this analysis is used as input for the structural analysis of a fire-exposed steel beam supporting a floor and roof slab, the thermally induced moments will not be simulated as a result of the uniform temperature assumption.

Unprotected Steel Members. The temperature rise in an unprotected steel section in a short time period is determined by:

$$\Delta T_s = \frac{a}{c_s\left(\frac{W}{D}\right)}\left(T_F - T_s\right)\Delta t \qquad \text{(C-A-4-2)}$$

The heat transfer coefficient, a, is determined from

$$a = a_c + a_r \qquad \text{(C-A-4-3)}$$

where

a_c = convective heat transfer coefficient

a_r = radiative heat transfer coefficient, given as:

$$a_r = \frac{5.67\times10^{-8}\varepsilon_F}{T_F - T_S}\left(T_F^4 - T_s^4\right) \qquad \text{(C-A-4-4)}$$

TABLE C-A-4.1
Guidelines for Estimating ε_F

Type of Assembly	ε_F
Column, exposed on all sides	0.7
Floor beam: Embedded in concrete floor slab, with only bottom flange of beam exposed to fire	0.5
Floor beam, with concrete slab resting on top flange of beam	
Flange width-to-beam depth ratio ≥ 0.5	0.5
Flange width-to-beam depth ratio < 0.5	0.7
Box girder and lattice girder	0.7

For the standard exposure, the convective heat transfer coefficient, a_c, can be approximated as 25 W/m²-°C [4.4 Btu/(ft²-hr-°F)]. The parameter, ε_F, accounts for the emissivity of the fire and the view factor. Estimates for ε_F, are suggested in Table C-A-4.1.

For accuracy reasons, a maximum limit for the time step, Δt, is suggested as 5 s.

The fire temperature needs to be determined based on the results of the design fire analysis. As alternatives, the standard time-temperature curves indicated in ASTM E119 (ASTM, 2009d) for building fires or ASTM E1529 (ASTM, 2006) for petrochemical fires may be selected.

Protected Steel Members. This method is most applicable for steel members with contour protection schemes, in other words, where the insulating or (protection) material follows the shape of the section. Application of this method for box protection methods will generally result in the temperature rise being overestimated. The approach assumes that the outside insulation temperature is approximately equal to the fire temperature. Alternatively, a more complex analysis may be conducted which determines the exterior insulation temperature from a heat transfer analysis between the assembly and the exposing fire environment.

If the thermal capacity of the insulation is much less than that for the steel, such that the following inequality is satisfied:

$$c_s W/D > 2 d_p \rho_p c_p \tag{C-A-4-5}$$

Then, Equation C-A-4-6 can be applied to determine the temperature rise in the steel:

$$\Delta T_s = \frac{k_p}{c_s d_p \left(\frac{W}{D}\right)} \left(T_F - T_s\right) \Delta t \tag{C-A-4-6}$$

If the thermal capacity of the insulation needs to be considered (such that the inequality in Equation C-A-4-5 is not satisfied), then Equation C-A-4-7 should be applied:

$$\Delta T_s = \frac{k_p}{d_p}\left[\frac{T_F - T_s}{c_s\left(\frac{W}{D}\right) + \frac{c_p \rho_p d_p}{2}}\right]\Delta t \qquad \text{(C-A-4-7)}$$

The maximum limit for the time step, Δt, should be 5 s.

Ideally, material properties should be considered as a function of temperature. Alternatively, material properties may be evaluated at a mid-range temperature expected for that component. For protected steel members, the material properties may be evaluated at 572 °F (300 °C), and for protection materials, a temperature of 932 °F (500 °C) may be considered.

External Steelwork. Temperature rise can be determined by applying the following equation:

$$\Delta T_s = \frac{q''}{c_s\left(\frac{W}{D}\right)}\Delta t \qquad \text{(C-A-4-8)}$$

where q'' is the net heat flux incident on the steel member.

Advanced Calculation Methods. The thermal response of steel members may be assessed by application of a computer model. A computer model for analyzing the thermal response of the steel members should consider the following:

(1) Exposure conditions established based on the definition of a design fire. The exposure conditions need to be stipulated either in terms of a time-temperature history, along with radiation and convection heat transfer parameters associated with the exposure, or as an incident heat flux. The incident heat flux is dependent on the design fire scenario and the location of the structural assembly. The heat flux emitted by the fire or smoke can be determined from a fire hazard analysis. Exposure conditions are established based on the definition of a design fire. The exposure conditions are stipulated either in terms of a time-temperature history, along with radiation and convection heat transfer parameters associated with the exposure, or as an incident heat flux.
(2) Temperature-dependent material properties.
(3) Temperature variation within the steel member and any protection components, especially where the exposure varies from side-to-side.

Nomenclature:

D = heat perimeter, in. (m)
T = temperature, °F (°C)
W = weight (mass) per unit length, lb/ft (kg/m)
a = heat transfer coefficient, Btu/ft^2-sec-°F (W/m^2-°C)

c = specific heat, Btu/lb·°F (J/kg-°C)
d = thickness, in. (m)
k = thermal conductivity, Btu/ft-sec-°F (W/m-°C)
Δt = time interval, s
ρ = density, lb/ft^3 (kg/m^3)

Subscripts:
c = convection
p = fire protection material
r = radiation
s = steel

4.2.3. Material Strengths at Elevated Temperatures

The properties for steel and concrete at elevated temperatures are adopted from the ECCS *Model Code on Fire Engineering* (ECCS, 2001), Section III.2, "Material Properties." These generic properties are consistent with those in Eurocode 3 (CEN, 2005) and Eurocode 4 (CEN, 2003), and reflect the consensus of the international fire engineering and research community. The background information for the mechanical properties of structural steel at elevated temperatures can be found in Cooke (1988) and Kirby and Preston (1988).

The stress-strain response of steel at elevated temperatures is more nonlinear than at room temperature and experiences less *strain hardening*. As shown in Figure C-A-4.1, at elevated temperatures the deviation from linear behavior is represented by the proportional limit, $F_p(T)$, and the yield strength, $F_y(T)$, is defined at a 2% strain. At 1,000 °F (538 °C), the yield strength, $F_y(T)$, reduces to about 66% of its value at room temperature, and the proportional limit $F_p(T)$ occurs at 29% of the elevated temperature yield strength $F_y(T)$. Finally, at

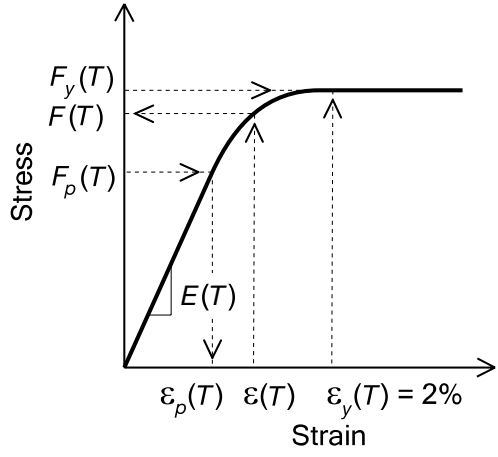

Fig. C-A-4.1. Parameters of idealized stress-strain curve at elevated temperatures (Takagi and Deierlein, 2007).

temperatures above 750 °F (399 °C), the elevated temperature ultimate strength is essentially the same as the elevated temperature yield strength; in other words, $F_y(T)$ is equal to $F_u(T)$.

4.2.4. Structural Design Requirements

The resistance of the structural system in the design basis fire may be determined by:

(a) Structural analysis of individual elements where the effects of restraint to thermal expansion and bowing may be ignored but the reduction in strength and stiffness with increasing temperature is incorporated
(b) Structural analysis of assemblies/subframes where the effects of restrained thermal expansion and thermal bowing are considered by incorporating geometric and material nonlinearities
(c) Global structural analysis where restrained thermal expansion, thermal bowing, material degradation, and geometric nonlinearity are considered

4.2.4.1. General Structural Integrity

The requirement for general structural integrity is consistent with that appearing in Section 1.4 of ASCE (2010). Structural integrity is the ability of the structural system to absorb and contain local damage or failure without developing into a progressive collapse that involves the entire structure or a disproportionately large part of it.

The Commentary C1.4 to Section 1.4 of ASCE (2010) contains guidelines for the provision of general structural integrity. Compartmentation (subdivision of buildings/stories in a building) is an effective means of achieving resistance to progressive collapse as well as preventing fire spread, as a cellular arrangement of structural components that are well tied together provides stability and integrity to the structural system as well as insulation.

4.2.4.2. Strength Requirements and Deformation Limits

As structural elements are heated, their expansion is restrained by adjacent elements and connections. Material properties degrade with increasing temperature. Load transfer can occur from hotter elements to adjacent cooler elements. Excessive deformation may be of benefit in a fire as it allows release of thermally induced stresses. Deformation is acceptable once horizontal and vertical separation as well as the overall load bearing capacity of the structural system is maintained.

4.2.4.3. Methods of Analysis

4.2.4.3a. Advanced Methods of Analysis

Advanced methods are required when the overall structural system response to fire, the interaction between structural members and separating elements in fire, or the residual strength of the structural system following a fire must be considered.

4.2.4.3b. Simple Methods of Analysis

Simple methods may suffice when a structural member or component can be assumed to be subjected to uniform heat flux on all sides and the assumption of a uniform temperature is reasonable as, for example, in a free-standing column.

In the 2005 Specification, nominal member strengths at elevated temperatures were calculated using the standard strength equations of the Specification with steel properties (E, F_y and F_u) reduced for elevated temperatures by appropriate factors. Recent research (Takagi and Deierlein, 2007) has shown this procedure to over-estimate considerably the strengths of members that are sensitive to stability effects. To reduce these unconservative errors, new equations, developed by Takagi and Deierlein (2007) are introduced in the 2010 edition of the Specification to more accurately calculate the strength of compression members subjected to flexural buckling and flexural members subjected to lateral-torsional buckling. As shown in Figure C-A-4.2, the 2010 Specification equations are much more accurate in comparison to detailed finite element method analyses (represented by the square symbol in the figure), which have been validated against test data, and to equations from the Eurocode (ECCS, 2001).

4.2.4.4. Design Strength

The design strength for structural steel members and connections is calculated as ϕR_n, in which R_n = nominal strength, when the deterioration in strength at elevated temperature is taken into account, and ϕ is the resistance factor. The nominal strength is computed as in Chapters C through K and Appendix 4 of the Specification, using material strength and stiffnesses at elevated temperatures defined in Tables A-4.2.1 and A-4.2.2. While ECCS (2001) and Eurocode 1 (CEN, 1991) specify partial material factors as equal to 1.0 for "accidental" limit states, the uncertainties in strength at elevated temperatures are substantial and in some cases are unknown. Accordingly, the resistance factors herein are the same as those at ordinary conditions.

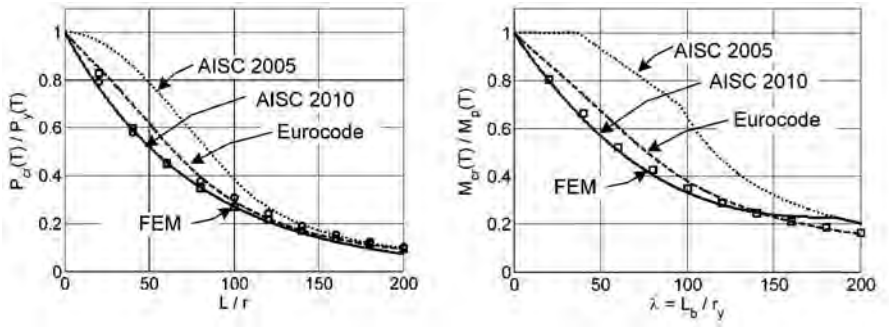

(a) Compression strength *(b) Flexural strength*

Fig. C-A-4.2 Comparison of compression and flexural strengths at 500 °C (932 °F) (Takagi and Deierlein, 2007).

4.3. DESIGN BY QUALIFICATION TESTING

4.3.1. Qualification Standards

Qualification testing is an acceptable alternative to design by analysis for providing fire resistance. Fire resistance ratings of building elements are generally determined in accordance with procedures set forth in ASTM E119, *Standard Test Methods for Fire Tests of Building Construction and Materials* (ASTM, 2009d). Tested building element designs, with their respective fire resistance ratings, may be found in special directories and reports published by testing agencies. Additionally, calculation procedures based on standard test results may be used as specified in *Standard Calculation Methods for Structural Fire Protection* (ASCE, 2005a).

For building elements that are required to prevent the spread of fire, such as walls, floors and roofs, the test standard provides for measurement of the transmission of heat. For loadbearing building elements, such as columns, beams, floors, roofs and loadbearing walls, the test standard also provides for measurement of the load-carrying ability under the standard fire exposure.

For beam, floor and roof specimens tested under ASTM E119, two fire resistance classifications—restrained and unrestrained—may be determined, depending on the conditions of restraint and the acceptance criteria applied to the specimen.

4.3.2. Restrained Construction

The ASTM E119 standard provides for tests of loaded beam specimens only in the restrained condition, where the two ends of the beam specimen (including slab ends for composite steel-concrete beam specimens) are placed tightly against the test frame that supports the beam specimen. Therefore, during fire exposure, the thermal expansion and rotation of the beam specimen ends are resisted by the test frame. Similar restrained condition is provided in the ASTM E119 tests on restrained loaded floor or roof assemblies, where the entire perimeter of the assembly is placed tightly against the test frame.

The practice of restrained specimens dates back to the early fire tests (over 100 years ago), and it is predominant today in the qualification of structural steel framed and reinforced concrete floors, roofs and beams in North America. While the current ASTM E119 standard does provide for an option to test loaded floor and roof assemblies in the unrestrained condition, this testing option is rarely used for structural steel and concrete. However, unrestrained loaded floor and roof specimens, with sufficient space around the perimeter to allow for free thermal expansion and rotation, are common in the tests of wood and cold-formed-steel framed assemblies.

Gewain and Troup (2001) provide a detailed review of the background research and practices in the qualification fire resistance testing and rating of structural steel (and composite steel/concrete) girders, beams, and steel framed floors and roofs. The restrained assembly fire resistance ratings (developed from tests on loaded restrained floor or roof specimens) and the restrained beam fire resistance

ratings (developed from tests on loaded restrained beam specimens) are commonly applicable to all types (with minor exceptions) of steel framed floors, roofs, girders and beams, as recommended in Table X3.1 of ASTM E119, especially where they incorporate or support cast-in-place or prefabricated concrete slabs. Ruddy et al. (2003) provides several detailed examples of steel framed floor and roof designs by qualification testing.

4.3.3. Unrestrained Construction

An unrestrained condition is one in which thermal expansion at the support of load-carrying elements is not resisted by forces external to the element and the supported ends are free to expand and rotate.

However, in the common practice for structural steel (and composite steel-concrete) beams and girders, the unrestrained beam ratings are developed from ASTM E119 tests on loaded restrained beam specimens or from ASTM E119 tests on loaded restrained floor or roof specimens, based only on temperature measurements on the surface of structural steel members. For steel framed floors and roofs, the unrestrained assembly ratings are developed from ASTM E119 tests on loaded restrained floor and roof specimens, based only on temperature measurements on the surface of the steel deck (if any) and on the surface of structural steel members. As such, the unrestrained fire resistance ratings are temperature-based ratings indicative of the time when the steel reaches specified temperature limits. These unrestrained ratings do not bear much direct relevance to the unrestrained condition or the load-bearing functions of the specimens in fire tests.

Nevertheless, unrestrained ratings provide useful supplementary information, and they are used as a conservative estimate of fire resistance (in lieu of the restrained ratings) in cases where the surrounding or supporting construction cannot be expected to accommodate the thermal expansion of steel beams or girders. For instance, as recommended in Table X3.1 of ASTM E119, a steel member bearing on a wall in a single span or at the end span of multiple spans should be considered unrestrained when the wall has not been designed and detailed to resist thermal thrust.

BIBLIOGRAPHY

The following references provide further information on key issues related to fire-resistant design of steel building systems and components, and are representative of the extensive literature on the topic. The references were selected because they are archival in nature or otherwise easily accessible by engineers seeking to design fire-resistance into building structures.

AISI (1980), *Designing Fire Protection for Steel Columns*, American Iron and Steel Institute, Washington, DC.

Bailey, C.G. (2000), "The Influence of the Thermal Expansion of Beams on the Structural Behavior of Columns in Steel-Framed Structures During a Fire," *Engineering Structures*, Vol. 22, No. 7, pp. 755–768.

Bennetts, I.D. and Thomas, I.R. (2002), "Design of Steel Structures under Fire Conditions," *Progress in Structural Engineering and Materials*, Vol. 4, No. 1, pp. 6–17.

Boring, D.F., Spence, J.C. and Wells, W.G. (1981), *Fire Protection Through Modern Building Codes*, 5th Ed., American Iron and Steel Institute, Washington, DC.

Brozzetti, J., Law, M., Pettersson, O. and Witteveen, J. (1983), "Safety Concepts and Design for Fire Resistance of Steel Structures," IABSE Surveys S-22/83, IABSE Periodica 1/1983, ETH-Honggerberg, Zurich, Switzerland.

Chalk, P.L. and Corotis, R.B. (1980), "Probability Model for Design Live Loads," *Journal of the Structures Division*, ASCE, Vol. 106, No. ST10, pp. 2,017–2,033.

Chan, S.L. and Chan, B.H.M. (2001), "Refined Plastic Hinge Analysis of Steel Frames under Fire," *Steel and Composite Structures*, Vol. 1, No. 1, pp. 111–130.

CIB W14 (1983), "A Conceptual Approach Towards a Probability Based Design Guide on Structural Fire Safety," *Fire Safety Journal*, Vol. 6, No. 1, pp. 1–79.

CIB W14 (2001), "Rational Safety Engineering Approach to Fire Resistance of Buildings," CIB Report No. 269, International Council for Research and Innovation in Building and Construction, Rotterdam, The Netherlands.

Culver, C.G. (1978), "Characteristics of Fire Loads in Office Buildings," *Fire Technology*, Vol. 1,491, pp. 51–60.

Huang, Z., Burgess, I.W. and Plank, R.J. (2000), "Three-Dimensional Analysis of Composite Steel-Framed Buildings in Fire," *Journal of Structural Engineering*, ASCE, Vol. 126, No. 3, pp. 389–397.

Jeanes, D.C. (1985), "Application of the Computer in Modeling Fire Endurance of Structural Steel Floor Systems," *Fire Safety Journal*, Vol. 9, pp. 119–135.

Kruppa, J. (2000), "Recent Developments in Fire Design," *Progress in Structures Engineering and Materials*, Vol. 2, No. 1, pp. 6–15.

Lane, B. (2000), "Performance-Based Design for Fire Resistance," *Modern Steel Construction*, AISC, December, pp. 54–61.

Lawson, R.M. (2001), "Fire Engineering Design of Steel and Composite Buildings,"

Journal of Constructional Steel Research, Vol. 57, pp. 1,233–1,247.

Lie, T.T. (1978), "Fire Resistance of Structural Steel," *Engineering Journal*, AISC, Vol. 15, No. 4, pp. 116–125.

Lie, T.T. and Almand, K.H. (1990), "A Method to Predict the Fire Resistance of Steel Building Columns," *Engineering Journal*, AISC, Vol. 27, pp. 158–167.

Magnusson, S.E. and Thelandersson, S. (1974), "A Discussion of Compartment Fires," *Fire Technology*, Vol. 10, No. 4, pp. 228–246.

Milke, J.A. (1985), "Overview of Existing Analytical Methods for the Determination of Fire Resistance," *Fire Technology*, Vol. 21, No. 1, pp. 59–65.

Milke, J.A. (1992), "Software Review: Temperature Analysis of Structures Exposed to Fire," *Fire Technology*, Vol. 28, No. 2, pp. 184–189.

Newman, G. (1999), "The Cardington Fire Tests," *Proceedings of the North American Steel Construction Conference*, Toronto, Canada, AISC, Chicago, IL, pp. 28.1–28.22.

Nwosu, D.I. and Kodur, V.K.R. (1999), "Behavior of Steel Frames Under Fire Conditions," *Canadian Journal of Civil Engineering*, Vol. 26, pp. 156–167.

Sakumoto, Y. (1992), "High-Temperature Properties of Fire-Resistant Steel for Buildings," *Journal of Structural Engineering*, ASCE, Vol. 18, No. 2, pp. 392–407.

Sakumoto, Y. (1999), "Research on New Fire-Protection Materials and Fire-Safe Design," *Journal of Structural Engineering*, ASCE, Vol. 125, No. 12, pp. 1,415–1,422.

Toh, W.S., Tan, K.H. and Fung, T.C. (2001), "Strength and Stability of Steel Frames in Fire: Rankine Approach," *Journal of Structural Engineering*, ASCE, Vol. 127, No. 4, pp. 461–468.

Usmani, A.S., Rotter, J.M., Lamont, S., Sanad, A.M. and Gillie, M. (2001), "Fundamental Principles of Structural Behaviour Under Thermal Effects," *Fire Safety Journal*, Vol. 36, No. 8.

Wang, Y.C. and Moore, D.B. (1995), "Steel Frames in Fire: Analysis," *Engineering Structures*, Vol. 17, No. 6, pp. 462–472.

Wang, Y.C. and Kodur, V.K.R. (2000), "Research Toward Use of Unprotected Steel Structures," *Journal of Structural Engineering*, ASCE, Vol. 120, No. 12, pp. 1,442–1,450.

Wang, Y.C. (2000), "An Analysis of the Global Structural Behavior of the Cardington Steel-Framed Building During the Two BRE Fire Tests," *Engineering Structures*, Vol. 22, pp. 401–412.

APPENDIX 5

EVALUATION OF EXISTING STRUCTURES

5.1. GENERAL PROVISIONS

The load combinations referred to in this chapter pertain to gravity loading because it is the most prevalent condition encountered. If other loading conditions are a consideration, such as lateral loads, the appropriate load combination from ASCE/SEI 7 (ASCE, 2010) or from the applicable building code should be used.

For seismic evaluation of existing buildings, ASCE/SEI 31 (ASCE, 2003) provides a three-tiered process for determination of the design and construction adequacy of existing buildings to resist earthquakes. The standard defines evaluation requirements as well as detailed evaluation procedures. Buildings may be evaluated in accordance with this standard for life safety or immediate occupancy performance levels. Where seismic rehabilitation of existing structural steel buildings is required, engineering of seismic rehabilitation work may be performed in accordance with the ASCE/SEI 41 (ASCE, 2006) standard or other standards. Use of the above two standards for seismic evaluation and seismic rehabilitation of existing structural steel buildings is subject to the approval of the authority having jurisdiction.

5.2. MATERIAL PROPERTIES

1. Determination of Required Tests

The extent of tests required depends on the nature of the project, the criticality of the structural system or member evaluated, and the availability of records pertinent to the project. Thus, the engineer of record has the responsibility to determine the specific tests required and the locations from which specimens are to be obtained.

2. Tensile Properties

Samples required for tensile tests should be removed from regions of reduced stress, such as at flange tips at beam ends and external plate edges, to minimize the effects of the reduced area. The number of tests required will depend on whether they are conducted to merely confirm the strength of a known material or to establish the strength of some other steel.

It should be recognized that the yield stress determined by standard ASTM methods and reported by mills and testing laboratories is somewhat greater than the static yield stress because of dynamic effects of testing. Also, the test specimen location may have an effect. These effects have already been accounted for in the nominal strength equations in the Specification. However, when strength evaluation is done by load testing, this effect should be accounted for in test planning because yielding will tend to occur earlier than otherwise anticipated. The static yield stress, F_{ys}, can be estimated from that determined by routine application of ASTM methods, F_y, by the following equation (Galambos, 1978, 1998):

$$F_{ys} = R\,(F_y - 4) \qquad \text{(C-A-5-1)}$$

$$[\text{S.I.: } F_{ys} = R\,(F_y - 27)] \qquad \text{(C-A-5-1M)}$$

where

F_{ys} = static yield stress, ksi (MPa)
F_y = reported yield stress, ksi (MPa)
R = 0.95 for tests taken from web specimens
= 1.00 for tests taken from flange specimens

The R factor in Equation C-A-5-1 accounts for the effect of the coupon location on the reported yield stress. Prior to 1997, certified material test reports for structural shapes were based on specimens removed from the web, in accordance with ASTM A6/A6M (ASTM, 2009f). Subsequently the specified coupon location was changed to the flange.

4. Base Metal Notch Toughness

The engineer of record shall specify the location of samples. Samples shall be cored, flame cut or saw cut. The engineer of record will determine if remedial actions are required, such as the possible use of bolted splice plates.

5. Weld Metal

Because connections typically are more reliable than structural members, strength testing of weld metal is not usually necessary. However, field investigations have sometimes indicated that complete-joint-penetration groove welds, such as at beam-to-column connections, were not made in accordance with AWS D1.1/D1.1M (AWS, 2010). The specified provisions in AWS D1.1/D1.1M Section 5.24 provide a means for judging the quality of such a weld. Where feasible, any samples removed should be obtained from compression splices rather than tension splices, because the effects of repairs to restore the sampled area are less critical.

6. Bolts and Rivets

Because connections typically are more reliable than structural members, removal and strength testing of fasteners is not usually necessary. However, strength testing of bolts is required where they can not be properly identified otherwise. Because removal and testing of rivets is difficult, assuming the lowest rivet strength grade simplifies the investigation.

5.3. EVALUATION BY STRUCTURAL ANALYSIS

2. Strength Evaluation

Resistance and safety factors reflect variations in determining strength of members and connections, such as uncertainty in theory and variations in material properties and dimensions. If an investigation of an existing structure indicates that there are variations in material properties or dimensions significantly greater than those anticipated in new construction, the engineer of record should consider the use of more conservative values.

5.4. EVALUATION BY LOAD TESTS

1. Determination of Load Rating by Testing

Generally, structures that can be designed according to the provisions of this Specification need no confirmation of calculated results by testing. However, special situations may arise when it is desirable to confirm by tests the results of calculations. Minimal test procedures are provided to determine the live load rating of a structure. However, in no case is the live load rating determined by testing to exceed that which can be calculated using the provisions of this Specification. This is not intended to preclude testing to evaluate special conditions or configurations that are not adequately covered by this Specification.

It is essential that the engineer of record take all necessary precautions to ascertain that the structure does not fail catastrophically during testing. A careful assessment of structural conditions before testing is a fundamental requirement. This includes accurate measurement and characterization of the size and strength of members, connections and details. All safety regulations of OSHA and other pertinent bodies must be strictly followed. Shoring and scaffolding should be used as required in the proximity of the test area to mitigate against unexpected circumstances. Deformations must be carefully monitored and structural conditions must be continually evaluated. In some cases it may be desirable to monitor strains as well.

The engineer of record must use judgment to determine when deflections are becoming excessive and terminate the tests at a safe level even if the desired loading has not been achieved. Incremental loading is specified so that deformations can be accurately monitored and the performance of the structure carefully observed. Load increments should be small enough initially so that the onset of significant yielding can be determined. The increment can be reduced as the level of inelastic behavior increases, and the behavior at this level carefully evaluated to determine when to safely terminate the test. Periodic unloading after the onset of inelastic behavior will help the engineer of record determine when to terminate the test to avoid excessive permanent deformation or catastrophic failure.

It must be recognized that the margin of safety at the maximum load level used in the test may be very small, depending on such factors as the original design, the purpose of the tests, and the condition of the structure. Thus, it is imperative that all appropriate safety measures be adopted. It is recommended that the maximum live load used for load tests be selected conservatively. It should be noted that experience in testing more than one bay of a structure is limited.

The provision limiting increases in deformations for a period of one hour is given so as to have positive means to confirm that the structure is stable at the loads evaluated.

2. Serviceability Evaluation

In certain cases serviceability performance must be determined by load testing. It should be recognized that complete recovery (in other words, return to initial deflected shape) after removal of maximum load is unlikely because of phenomena

such as local yielding, slip at the slab interface in composite construction, creep in concrete slabs, localized crushing or deformation at shear connections in slabs, slip in bolted connections, and effects of continuity. Because most structures exhibit some slack when load is first applied, it is appropriate to project the load-deformation curve back to zero load to determine the slack and exclude it from the recorded deformations. Where desirable, the applied load sequence can be repeated to demonstrate that the structure is essentially elastic under service loads and that the permanent set is not detrimental.

5.5. EVALUATION REPORT

Extensive evaluation and load testing of existing structures is often performed when appropriate documentation no longer exists or when there is considerable disagreement about the condition of a structure. The resulting evaluation is only effective if well documented, particularly when load testing is involved. Furthermore, as time passes, various interpretations of the results can arise unless all parameters of the structural performance, including material properties, strength, and stiffness, are well documented.

APPENDIX 6

STABILITY BRACING FOR COLUMNS AND BEAMS

6.1. GENERAL PROVISIONS

Winter (1958, 1960) developed the concept of a dual requirement for bracing design, which involves criteria for both strength and stiffness. The design requirements of Appendix 6 are based upon this approach [for more discussion, see Ziemian (2010)] and consider two general types of bracing systems, relative and nodal, as shown in Figure C-A-6.1.

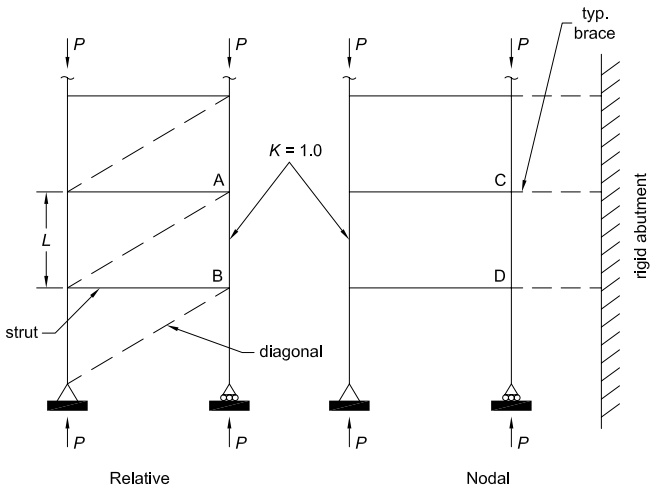

(a) Column bracing

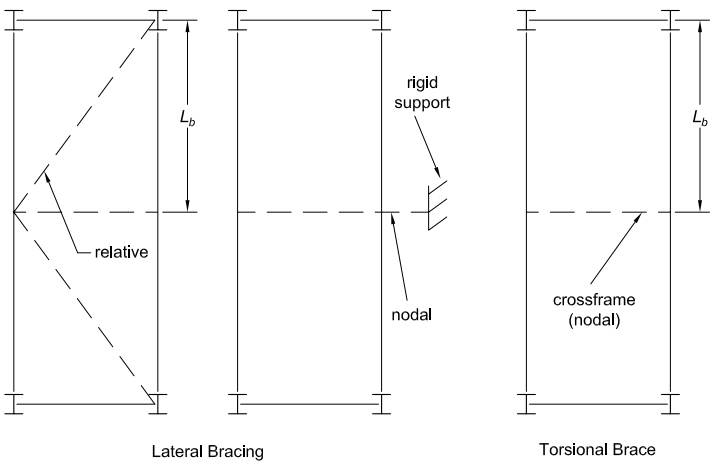

(b) Beam bracing

Fig. C-A-6.1. Types of bracing.

A relative brace for a column (such as diagonal bracing or shear walls) is attached to two locations along the length of the column. The distance between these locations is the unbraced length, L, of the column, for which $K = 1.0$ can be used. The relative bracing system shown in Figure C-A-6.1(a) consists of the diagonals and struts that control the movement at one end of the unbraced length, A, with respect to the other end of the unbraced length, B. The forces in these bracing elements are resolved by the forces in the beams and columns in the frame that is braced. The diagonal and strut both contribute to the strength and stiffness of the relative bracing system. However, when the strut is a floor beam and the diagonal a brace, the floor beam stiffness is usually large compared to the stiffness of the brace. In such a case, the brace strength and stiffness often controls the strength and stiffness of the relative bracing system.

A nodal brace for a column controls movement only at the point it braces, and without direct interaction with adjacent braced points. The distance between adjacent braced points is the unbraced length, L, of the column, for which $K = 1.0$ can be used. The nodal bracing system shown in Figure C-A-6.1(a) consists of a series of independent braces, which connect to a rigid abutment, from braced points, including C and D. The forces in these bracing elements are resolved by other structural elements not part of the frame that is braced.

As illustrated in Figure C-A-6.1(b), a relative bracing system for a beam commonly consists of a system with diagonals; a nodal bracing system commonly exists when there is a link to an external support or a cross-frame between two adjacent beams. The cross-frame prevents twist (not lateral displacement) of the beams only at the particular cross frame location. With the required lateral and rotational restraint provided at the beam ends, the unbraced length, L_b, in all of these cases is the distance from the support to the braced point.

The bracing requirements stipulated for columns in this Section enable the column to sustain its maximum load based on the unbraced length, L, between the brace points and the use of $K = 1.0$. This is not the same as the no-*sidesway* case. As illustrated in Figure C-A-6.2 for a cantilevered column with a brace of variable stiffness

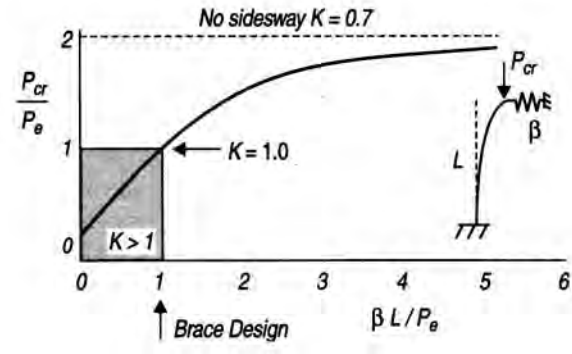

Fig. C-A-6.2. Cantilevered column with brace at top.

at the top, the critical stiffness with $K = 1.0$ is P_e/L. However, a brace with five times this stiffness only reaches 95% of the value required for the use of $K = 0.7$, and an infinitely stiff brace would be required to reach the no-sway limit, in theory. Similarly, the determination of bracing required to reach specified rotation capacities or ductility limits is beyond the scope of these recommendations.

The provisions for required brace stiffness, β_{br}, in Sections 6.2 and 6.3 for columns and beams, respectively, have been selected equal to twice the critical stiffness, and all bracing stiffness provisions have $\phi = 0.75$ and $\Omega = 2.00$. The required brace strength, P_{rb}, is a function of the initial out-of-straightness, Δ_o, and the brace stiffness, β. ϕ and Ω are not involved in the calculation of required brace strength; they are applied when the provisions in other chapters of this Specification are applied to design the members and connections provided to resist these forces.

For a relative bracing system, the relationship between column load, brace stiffness and sway displacement is shown in Figure C-A-6.3. If the bracing stiffness, β, is equal to the critical brace stiffness for a perfectly plumb member, β_i, P approaches P_e as the sway deflection increases. However, such large displacements would produce large bracing forces, and Δ must be kept small for practical design.

For the relative bracing system shown in Figure C-A-6.3, the use of $\beta_{br} = 2\beta_i$ and an initial displacement of $\Delta_o = L/500$ results in P_{rb} equal to 0.4% of P_e. In the foregoing, L is the distance between adjacent braced points as shown in Figure C-A-6.4, and Δ_o is the displacement from the straight position at the braced points caused by lateral loads, erection tolerances, column shortening, and other sources, but not including brace elongations from gravity loads.

As stated in the Chapter C, the use of $\Delta_o = L/500$ is based upon the maximum frame out-of-plumbness specified in the AISC *Code of Standard Practice for Steel Buildings and Bridges* (AISC, 2010a). Similarly, for torsional bracing of beams an initial rotation, $\theta_o = L/(500h_o)$, is assumed, where h_o is the distance between flange centroids. For other values of Δ_o and θ_o, it is permissible to modify the bracing required strengths, P_{rb} and M_{rb}, by direct proportion. For cases where it is unlikely that all columns in a story will be out-of-plumb in the same direction, Chen and Tong (1994) recommend an average initial displacement of $\Delta_o = L/\left(500\sqrt{n_o}\right)$, where n_o

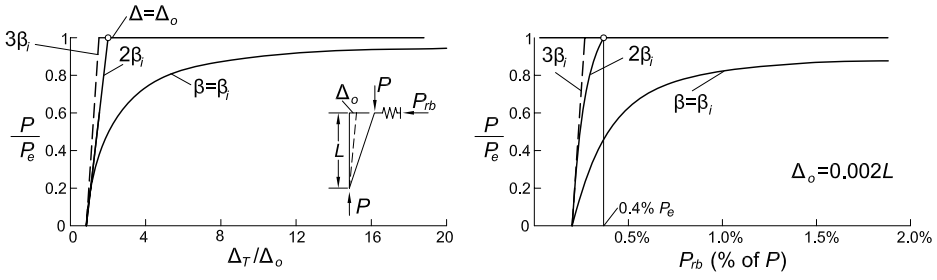

Fig. C-A-6.3. Effect of initial out-of-plumbness.

is the number of columns, each with a random Δ_o, stabilized by the bracing system. This reduced Δ_o would be appropriate when combining the stability brace forces with wind and seismic forces.

If the actual bracing stiffness provided, β_{act}, is larger than β_{br}, the required brace strength, P_{rb} (or M_{rb} in the case of a torsional brace), can be multiplied by the following factor:

$$\frac{1}{2-\frac{\beta_{br}}{\beta_{act}}} \tag{C-A-6-1}$$

Connections in the bracing system, if they are flexible or can slip, should be considered in the evaluation of the bracing stiffness as follows:

$$\frac{1}{\beta_{act}}=\frac{1}{\beta_{conn}}+\frac{1}{\beta_{brace}} \tag{C-A-6-2}$$

The resulting bracing system stiffness, β_{act}, is less than the smaller of the connection stiffness, β_{conn}, and the brace stiffness, β_{brace}. Slip in connections with standard holes need not be considered, except when only a few bolts are used.

When evaluating the bracing of rows of columns or beams, consideration must be given to the accumulation of the bracing forces, which may result in a different displacement at each column or beam location. In general, bracing forces can be minimized by increasing the number of braced bays and using stiff braces.

Member inelasticity has no significant effect on stability bracing requirements (Yura, 1995).

6.2. COLUMN BRACING

For nodal column bracing, the critical stiffness is a function of the number of intermediate braces (Winter, 1958, 1960). For one intermediate brace, $\beta_i = 2P_r/L_b$, and for many braces, $\beta_i = 4P_r/L_b$. The relationship between the critical stiffness and the number of braces, n, can be approximated (Yura, 1995) as:

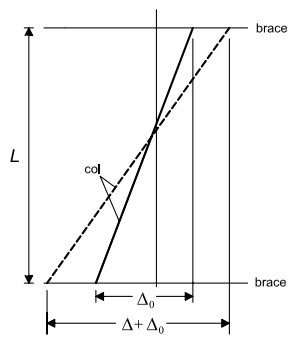

Fig. C-A-6.4. Definitions of initial displacements for relative and nodal braces.

$$\beta_i = \left(4 - \frac{2}{n}\right)\frac{P_r}{L_b} \qquad \text{(C-A-6-3)}$$

The most severe case (many braces) was adopted for the brace stiffness requirement, $\beta_{br} = 2 \times 4P/L_b$. The brace stiffness in Equation A-6-4 can be multiplied by the following ratio to account for the actual number of braces:

$$\left(\frac{2n-1}{2n}\right) \qquad \text{(C-A-6-4)}$$

The unbraced length, L_b, in Equation A-6-4 is assumed equal to the length, KL, that enables the column to reach P_r. When the actual brace spacing is less than the value of KL so determined, the calculated required stiffness may become quite conservative since the stiffness equations are inversely proportional to L_b. In such cases, L_b can be taken equal to KL. This substitution is also permitted for the beam nodal bracing formulations given in Equations A-6-8 and A-6-9.

For example, a W12×53 (W310×79) with P_u = 400 kips (1 780 kN) for LRFD or P_a = 267 kips (1 190 kN) for ASD can have a maximum unbraced length of 18 ft (5.5 m) for ASTM A992 steel. If the actual brace spacing is 8 ft (2.4 m), 18 ft (5.5 m) may be used in Equation A-6-4 to determine the required stiffness. The use of L_b equal to the value of KL in Equation A-6-4 provides reasonable estimates of the brace stiffness requirements; however, the solution can still result in conservative estimates of the stiffness requirements. Improved accuracy can be obtained by treating the system as a continuous bracing system (Lutz and Fisher, 1985; Ziemian, 2010).

With regard to the brace strength requirements, Winter's rigid model only accounts for force effects from lateral displacements and would derive a brace force equal to 0.8% of P_r, which accounts only for lateral displacement force effects. To account for the additional force due to member curvature, this theoretical force has been increased to 1% of P_r.

6.3. BEAM BRACING

Beam bracing must control twist of the section, but need not prevent lateral displacement. Both lateral bracing, such as a steel joists attached to the compression flange of a simply supported beam, and torsional bracing, such as a cross-frame or diaphragm between adjacent girders, can be used to control twist. Note, however, that lateral bracing systems that are attached only near the beam centroid are generally ineffective in controlling twist.

For beams subject to reverse-curvature bending, an unbraced inflection point cannot be considered a braced point because twist can occur at that point (Ziemian, 2010). If bracing is needed, lateral bracing provided near an inflection point must be attached to both flanges to prevent twist; alternatively, torsional bracing can be provided. A lateral brace on one flange near the inflection point is ineffective.

The beam bracing requirements in this Section are based on the recommendations of Yura (2001).

1. Lateral Bracing

For lateral bracing, the following stiffness requirement is derived following Winter's approach:

$$\beta_{br} = 2N_i C_t \, (C_b P_f) \, C_d/\phi L_b \qquad \text{(C-A-6-5)}$$

where

N_i = 1.0 for relative bracing
= (4-2/n) for nodal bracing
C_t = 1.0 for centroidal loading
= 1 + (1.2/n) for top-flange loading
n = number of intermediate braces
P_f = beam compressive flange force, kips (N)
= $\pi^2 E I_{yc}/L_b^2$
I_{yc} = out-of-plane moment of inertia of the compression flange, in.^{4} (mm^4)
C_b = lateral-torsional buckling modification factor from Chapter F
C_d = double curvature factor (compression in both flanges)
= 1 + $(M_S/M_L)^2$
M_S = smallest moment causing compression in either flange, kip-ft (N-mm)
M_L = largest moment causing compression in each flange, kip-ft (N-mm)

The C_d factor varies between 1 and 2, and is applied only to the brace closest to the inflection point. The term ($2N_i C_t$) can be conservatively approximated as 10 for any number of nodal braces and 4 for relative bracing, and ($C_b P_f$) can be approximated by M_r/h_o, which simplifies Equation C-A-6-5 to the stiffness requirements given by Equations A-6-6 and A-6-8. Equation C-A-6-5 can be used in lieu of Equations A-6-6 and A-6-8.

The brace strength requirement for relative bracing is

$$P_{rb} = 0.004 M_r C_t C_d/h_o \qquad \text{(C-A-6-6a)}$$

and for nodal bracing

$$P_{rb} = 0.01 M_r C_t C_d/h_o \qquad \text{(C-A-6-6b)}$$

They are based on an assumed initial lateral displacement of the compression flange of $0.002L_b$. The brace strength requirements of Equations A-6-5 and A-6-7 are derived from Equations C-A-6-6a and C-A-6-6b assuming top flange loading (C_t = 2). Equations C-A-6-6a and C-A-6-6b can be used in lieu of Equations A-6-5 and A-6-7, respectively.

2. Torsional Bracing

Torsional bracing can either be attached continuously along the length of the beam (for example, metal deck or slabs) or be located at discrete points along the length of the member (for example, cross frames). With respect to the girder response, torsional bracing attached to the tension flange is just as effective as a brace attached at mid-depth or to the compression flange. Although the girder response is generally not sensitive to the brace location, the position of the brace on the cross section does have an effect on the stiffness of the brace itself. For example, a torsional brace

attached on the bottom flange will often bend in single curvature (for example, with a flexural stiffness of $2EI/L$ based on the brace properties), while a brace attached on the top flange will often bend in reverse curvature (for example, with a flexural stiffness of $6EI/L$ based on the brace properties). Partially restrained connections can be used if their stiffness is considered in evaluating the torsional brace stiffness.

The torsional brace requirements are based on the buckling strength of a beam with a continuous torsional brace along its length presented in Taylor and Ojalvo (1966) and modified for cross section distortion in Yura (2001), as follows.

$$M_r \le M_{cr} = \sqrt{\left(C_{bu}M_o\right)^2 + \frac{C_b^2 EI_y \overline{\beta}_T}{2C_{tt}}} \tag{C-A-6-7}$$

The term $C_{bu}M_o$ is the buckling strength of the beam without torsional bracing. $C_{tt} = 1.2$ when there is top flange loading and $C_{tt} = 1.0$ for centroidal loading. $\overline{\beta}_T = n\beta_T/L$ is the continuous torsional brace stiffness per unit length or its equivalent when n nodal braces, each with a stiffness β_T, are used along the span, L, and the 2 accounts for initial out-of-straightness. Neglecting the unbraced beam buckling term gives a conservative estimate of the torsional brace stiffness requirement (Equation A-6-11).

The strength requirements for beam torsional bracing were developed based upon an assumed initial twist imperfection of $\theta_o = 0.002L_b/h_o$, where h_o is equal to the depth of the beam. Providing at least twice the ideal stiffness results in a brace force, $M_{rb} = \beta_T\theta_o$. Using the formulation of Equation A-6-11 (without ϕ or Ω), the strength requirement for the torsional bracing is

$$\begin{aligned} M_{rb} &= \beta_T\theta_o \\ &= \left(\frac{2.4LM_r^2}{nEI_yC_b^2}\right)\left(\frac{L_b}{500h_o}\right) \end{aligned} \tag{C-A-6-8}$$

To obtain Equation A-6-9, the equation was simplified as follows:

$$\begin{aligned} M_{rb} &= \left(\frac{2.4LM_r^2}{nEI_yC_b^2}\right)\left(\frac{L_b}{500h_o}\right)\left(\frac{\pi^2L_b^2}{\pi^2L_b^2}\right) \\ &= \left(\frac{2.4\pi^2M_rL}{500nC_bL_b}\right)\left(\frac{M_r}{h_o}\right)\left(\frac{L_b^2}{C_b\pi^2EI_y}\right) \end{aligned} \tag{C-A-6-9}$$

The term M_r/h_o can be approximated as the flange force, P_f, and the term $L_b^2/C_b\pi^2EI_y$ can be represented as the reciprocal of twice the buckling strength of the flange $[1/(2P_f)]$. Substituting for these terms and evaluating the constants results in

$$M_{rb} = \frac{0.024M_rL}{nC_bL_b} \tag{C-A-6-10}$$

which is the expression given in Equation A-6-9.

Equations A-6-9 and A-6-12 give the strength and stiffness requirements for doubly symmetric beams. For singly symmetric sections these equations will generally be

conservative. Better estimates of the strength requirements for torsional bracing of singly symmetric sections can be obtained with Equation C-A-6-8 by replacing I_y with I_{eff} as given in the following expression:

$$I_{eff} = I_{yc} + \left(\frac{t}{c}\right) I_{yt} \qquad \text{(C-A-6-11)}$$

where

t = distance from the neutral axis to the extreme tensile fibers, in. (mm)

c = distance from the neutral axis to the extreme compressive fibers, in. (mm)

I_{yc} and I_{yt} = respective moments of inertia of compression and tension flanges about an axis through the web, in.^{4} (mm^4)

Good estimates of the stiffness requirements of torsional braces for singly symmetric I-shaped beams may be obtained using Equation A-6-11 and replacing I_y with I_{eff} given in Equation C-A-6-11.

The β_{sec} term in Equations A-6-10, A-6-12 and A-6-13 accounts for cross section distortion. A web stiffener at the brace point reduces cross-sectional distortion and improves the effectiveness of a torsional brace. When a cross frame is attached near both flanges or a diaphragm is approximately the same depth as the girder, then web distortion will be insignificant so β_{sec} equals infinity. The required bracing stiffness, β_{Tb}, given by Equation A-6-10 was obtained by solving the following expression that represents the brace system stiffness including distortion effects:

$$\frac{1}{\beta_T} = \frac{1}{\beta_{Tb}} + \frac{1}{\beta_{sec}} \qquad \text{(C-A-6-12)}$$

Parallel chord trusses with both chords extended to the end of the span and attached to supports can be treated like beams. In Equations A-6-5 through A-6-9, M_u may be taken as the maximum compressive chord force times the depth of the truss to determine the brace strength and stiffness requirements. Cross-section distortion effects, β_{sec}, need not be considered when full-depth cross frames are used for bracing. When either chord does not extend to the end of the span, consideration should be given to control twist near the ends of the span by the use of cross frames or ties.

6.4. BEAM-COLUMN BRACING

The section on bracing for beam-columns was introduced in the 2010 edition. The bracing requirements for compression and those for flexure are, in effect, superimposed to arrive at the requirements for beam-columns. This approach will tend to be conservative and a more refined solution obtained by rational analysis may be desirable.

APPENDIX 7

ALTERNATIVE METHODS OF DESIGN FOR STABILITY

The effective length method and first-order analysis method are addressed in this Appendix as alternatives to the direct analysis method, which is presented in Chapter C. These alternative methods of design for stability can be used when the limits on their use as defined in Appendix Sections 7.2.1 and 7.3.1, respectively, are satisfied.

Both methods in this Appendix utilize the nominal geometry and the nominal elastic stiffnesses (*EI, EA*) in the analysis. Accordingly, it is important to note that the *sidesway* amplification ($\Delta_{2nd\text{-}order}/\Delta_{1st\text{-}order}$ or B_2) limits specified in Chapter C and Appendix 7 are different. For the direct analysis method in Chapter C, the limit of 1.7 for certain requirements is based upon the use of reduced stiffnesses (EI^* and EA^*). For the effective length method and first-order analysis method, the equivalent limit of 1.5 is based upon the use of unreduced stiffnesses (*EI* and *EA*).

7.2. EFFECTIVE LENGTH METHOD

The effective length method (though it was not formally identified by this name) has been used in various forms in the AISC Specification since 1961. The current provisions are essentially the same as those in Chapter C of the 2005 *Specification for Structural Steel Buildings* (AISC, 2005a), with the following exceptions:

These provisions, together with the use of a column effective length greater than the actual length for calculating available strength in some cases, account for the effects of initial out-of-plumbness and member stiffness reductions due to the spread of plasticity. No stiffness reduction is required in the analysis.

The effective length, *KL*, for column buckling based upon elastic (or inelastic) stability theory, or alternatively the equivalent elastic column buckling load, $F_e = \pi^2 EI/(KL)^2$, is used to calculate an axial compressive strength, P_c, through an empirical *column curve* that accounts for geometric imperfections and distributed yielding (including the effects of *residual stresses*). This column strength is then combined with the flexural strength, M_c, and second-order member forces, P_r and M_r, in the beam-column interaction equations.

Braced Frames

Braced frames are commonly idealized as vertically cantilevered pin-connected truss systems, ignoring any secondary moments within the system. The effective length factor, *K*, of components of the braced frame is normally taken as 1.0, unless a smaller value is justified by structural analysis and the member and connection design is consistent with this assumption. If connection fixity is modeled in the analysis, the resulting member and connection moments must be accommodated in the design.

If $K < 1$ is used for the calculation of P_n in braced frames, the additional demands on the stability bracing systems and the influence on the second-order moments in beams providing restraint to the columns must be considered. The provisions in Appendix 6 do not address the additional demands on bracing members from the use of $K < 1$. Generally, a rigorous second-order elastic analysis is necessary for calculation of the second-order moments in beams providing restraint to column members designed based on $K < 1$. Therefore, design using $K = 1$ is recommended, except in those special situations where the additional calculations are deemed justified.

Moment Frames

Moment frames rely primarily upon the flexural stiffness of the connected beams and columns. Stiffness reductions due to shear deformations may require consideration when bay sizes are small and/or members are deep.

When the *effective length method* is used, the design of all beam-columns in moment frames must be based on an effective length, KL, greater than the actual length, L, except when specific exceptions based upon high structural stiffness are met. When the sidesway amplification ($\Delta_{2nd\text{-}order}/\Delta_{1st\text{-}order}$ or B_2) is equal to or less than 1.1, the frame design may be based on the use of $K = 1.0$ for the columns. This simplification for stiffer structures results in a 6% maximum error in the in-plane beam-column strength checks of Chapter H (White and Hajjar, 1997a). When the sidesway amplification is larger, K must be calculated.

A wide range of methods has been suggested in the literature for the calculation of K-factors (Kavanagh, 1962; Johnston, 1976; LeMessurier, 1977; ASCE Task Committee on Effective Length, 1997; White and Hajjar, 1997b). These range from simple idealizations of single columns as shown in Table C-A-7.1 to complex buckling solutions for specific frames and loading conditions. In some types of frames, K-factors are easily estimated or calculated, and are a convenient tool for stability design. In other types of structures, the determination of accurate K-factors is determined by tedious hand procedures, and system stability may be assessed more effectively with the direct analysis method.

The most common method for determining K is through use of the *alignment charts*, which are shown in Figure C-A-7.1 for frames with sidesway inhibited and Figure C-A-7.2 for frames with sidesway uninhibited (Kavanagh, 1962). These charts are based on assumptions of idealized conditions, which seldom exist in real structures, as follows:

(1) Behavior is purely elastic.
(2) All members have constant cross section.
(3) All joints are rigid.
(4) For columns in frames with sidesway inhibited, rotations at opposite ends of the restraining beams are equal in magnitude and opposite in direction, producing single curvature bending.
(5) For columns in frames with sidesway uninhibited, rotations at opposite ends of the restraining beams are equal in magnitude and direction, producing reverse curvature bending.
(6) The stiffness parameter $L\sqrt{P/EI}$ of all columns is equal.

TABLE C-A-7.1
Approximate Values of Effective Length Factor, *K*

	(a)	(b)	(c)	(d)	(e)	(f)
Buckled shape of column is shown by dashed line			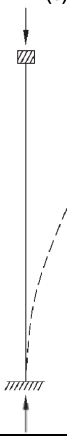			
Theoretical *K* value	0.5	0.7	1.0	1.0	2.0	2.0
Recommended design value when ideal conditions are approximated	0.65	0.80	1.2	1.0	2.1	2.0
End condition code	Rotation fixed and translation fixed Rotation free and translation fixed Rotation fixed and translation free Rotation free and translation free					

(7) Joint restraint is distributed to the column above and below the joint in proportion to *EI/L* for the two columns.
(8) All columns buckle simultaneously.
(9) No significant axial compression force exists in the girders.

The alignment chart for sidesway inhibited frames shown in Figure C-A-7.1 is based on the following equation:

$$\frac{G_A G_B}{4}(\pi/K)^2 + \left(\frac{G_A + G_B}{2}\right)\left(1 - \frac{\pi/K}{\tan(\pi/K)}\right) + \frac{2\tan(\pi/2K)}{(\pi/K)} - 1 = 0 \qquad \text{(C-A-7-1)}$$

The alignment chart for sidesway uninhibited frames shown in Figure C-A-7.2 is based on the following equation:

$$\frac{G_A G_B(\pi/K)^2 - 36}{6(G_A + G_B)} - \frac{(\pi/K)}{\tan(\pi/K)} = 0 \qquad \text{(C-A-7-2)}$$

where

$$G = \frac{\Sigma\left(E_c I_c / L_c\right)}{\Sigma\left(E_g I_g / L_g\right)} = \frac{\Sigma\left(EI / L\right)_c}{\Sigma\left(EI / L\right)_g} \qquad \text{(C-A-7-3)}$$

The subscripts *A* and *B* refer to the joints at the ends of the column being considered. The symbol Σ indicates a summation of all members rigidly connected to that joint and located in the plane in which buckling of the column is being considered. E_c is the elastic modulus of the column, I_c is the moment of inertia of the column, and L_c is the unsupported length of the column. E_g is the elastic modulus of the girder, I_g is the moment of inertia of the girder, and L_g is the unsupported length of the girder or other restraining member. I_c and I_g are taken about axes perpendicular to the plane of buckling being considered. The alignment charts are valid for different materials if an appropriate effective rigidity, *EI*, is used in the calculation of *G*.

It is important to remember that the alignment charts are based on the assumptions of idealized conditions previously discussed and that these conditions seldom exist in real structures. Therefore, adjustments are often required, such as:

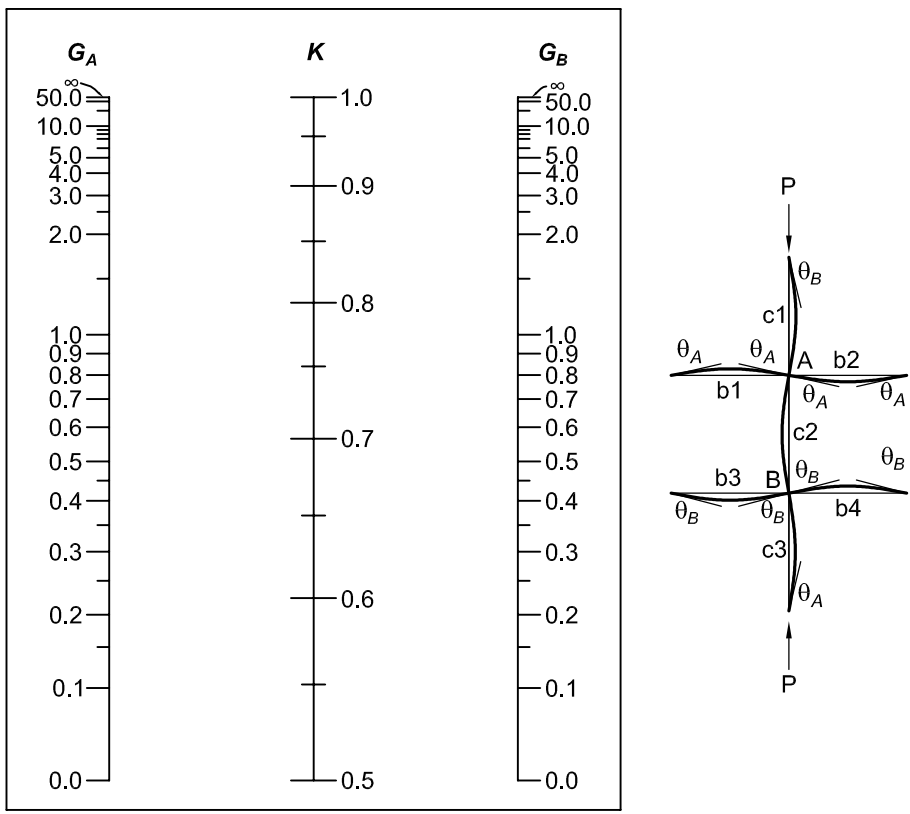

Fig. C-A-7.1. Alignment chart—sidesway inhibited (braced frame).

Adjustments for Columns With Differing End Conditions. For column ends supported by, but not rigidly connected to, a footing or foundation, G is theoretically infinity but unless designed as a true friction-free pin, may be taken as 10 for practical designs. If the column end is rigidly attached to a properly designed footing, G may be taken as 1.0. Smaller values may be used if justified by analysis.

Adjustments for Girders With Differing End Conditions. For sidesway inhibited frames, these adjustments for different girder end conditions may be made:

(a) If the far end of a girder is fixed, multiply the $(EI/L)_g$ of the member by 2.
(b) If the far end of the girder is pinned, multiply the $(EI/L)_g$ of the member by $1^1/_2$.

For sidesway uninhibited frames and girders with different boundary conditions, the modified girder length, L_g', should be used in place of the actual girder length, where

$$L_g' = L_g\,(2 - M_F/M_N) \qquad \text{(C-A-7-4)}$$

M_F is the far end girder moment and M_N is the near end girder moment from a first-order lateral analysis of the frame. The ratio of the two moments is positive if the girder is in reverse curvature. If M_F/M_N is more than 2.0, then L_g' becomes negative,

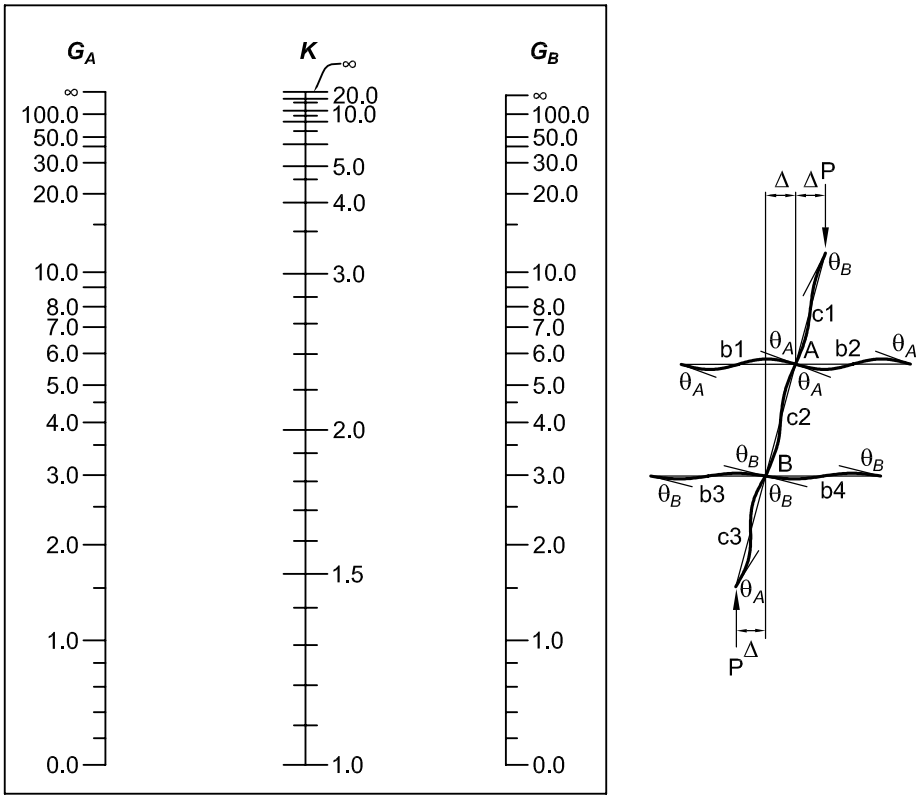

Fig. C-A-7.2. Alignment chart sidesway—uninhibited (moment frame).

in which case G is negative and the alignment chart equation must be used. For sidesway uninhibited frames, the following adjustments for different girder end conditions may be made:

(a) If the far end of a girder is fixed, multiply the $(EI/L)_g$ of the member by $^2/_3$.
(b) If the far end of the girder is pinned, multiply the $(EI/L)_g$ of the member by $^1/_2$.

Adjustments for Girders with Significant Axial Load. For both sidesway conditions, multiply the $(EI/L)_g$ by the factor $(1–Q/Q_{cr})$, where Q is the axial load in the girder and Q_{cr} is the in-plane buckling load of the girder based on $K = 1.0$.

Adjustments for Column Inelasticity. For both sidesway conditions, replace (E_cI_c) with $\tau_b(E_cI_c)$ for all columns in the expression for G_A and G_B.

Adjustments for Connection Flexibility. One important assumption in the development of the alignment charts is that all beam-column connections are fully restrained (FR connections). As seen above, when the far end of a beam does not have an FR connection that behaves as assumed, an adjustment must be made. When a beam connection at the column under consideration is a shear-only connection, that is, there is no moment, then that beam cannot participate in the restraint of the column and it cannot be considered in the $\Sigma(EI/L)_g$ term of the equation for G. Only FR connections can be used directly in the determination of G. PR connections with a documented moment-rotation response can be utilized, but the $(EI/L)_g$ of each beam must be adjusted to account for the connection flexibility. The ASCE Task Committee on Effective Length (1997) provides a detailed discussion of frame stability with PR connections.

Combined Systems

When combined systems are used, all the systems must be included in the structural analysis. Consideration must be given to the variation in stiffness inherent in concrete or masonry shear walls due to various degrees to which these elements may experience cracking. This applies to load combinations for serviceability as well as strength. It is prudent for the designer to consider a range of possible stiffnesses, as well as the effects of shrinkage, creep and load history, in order to envelope the likely behavior and provide sufficient strength in all interconnecting elements between systems. Following the analysis, the available strength of compression members in moment frames must be assessed with effective lengths calculated as required for moment frame systems; other compression members may be assessed using $K = 1.0$.

Leaning Columns and Distribution of Sidesway Instability Effects

Columns in gravity framing systems can be designed as pin-ended columns with $K = 1.0$. However, the destabilizing effects (P-Δ effects) of the gravity loads on all such columns, and the load transfer from these columns to the lateral-load-resisting system, must be accounted for in the design of the lateral-load-resisting system.

It is important to recognize that sidesway instability of a building is a story phenomenon involving the sum of the sway resistances of all the lateral load-resisting elements in the story and the sum of the factored gravity loads in the columns in that

story. No individual column in a story can buckle in a sidesway mode without the entire story buckling.

If every column in a story is part of a moment frame and each column is designed to support its own axial load, P and P-Δ moment such that the contribution of each column to the lateral stiffness or to the story buckling load is proportional to the axial load supported by the column, all the columns will buckle simultaneously. Under this idealized condition, there is no interaction among the columns in the story; column sway instability and frame instability occur at the same time. Typical framing, however, does not meet this idealized condition, and real systems redistribute the story P-Δ effects to the lateral load-resisting elements in that story in proportion to their stiffnesses. This redistribution can be accomplished using such elements as floor diaphragms or horizontal trusses.

In a building that contains columns that contribute little or nothing to the sway stiffness of the story, such columns are referred to as leaning columns. These columns can be designed using $K = 1.0$, but the lateral load-resisting elements in the story must be designed to support the destabilizing P-Δ effects developed from the loads on these leaning columns. The redistribution of P-Δ effects among columns must be considered in the determination of K and F_e for all the columns in the story for the design of moment frames. The proper K-factor for calculation of P_c in moment frames, accounting for these effects, is denoted in the following by the symbol K_2.

Effective Length for Story Stability

Two approaches for evaluating story stability are recognized: the story stiffness approach (LeMessurier, 1976, 1977) and the story buckling approach (Yura, 1971). Additionally, a simplified approach proposed by LeMessurier is also discussed.

The column effective length factor associated with lateral story buckling is expressed as K_2 in the following discussions. The value of K_2 determined from Equation C-A-7-5 or Equation C-A-7-8 may be used directly in the equations of Chapter E. However, it is important to note that this equation is not appropriate for use when calculating the story buckling mode as the summation of $\pi^2 EI/(K_2 L)^2$. Also, note that the value of P_c calculated using K_2 by either method cannot be taken greater than the value of P_c determined based on sidesway-inhibited buckling.

Story Stiffness Approach. For the story stiffness approach, K_2 is defined as

$$K_2 = \sqrt{\frac{\Sigma P_r}{(0.85 + 0.15R_L)P_r}\left(\frac{\pi^2 EI}{L^2}\right)\left(\frac{\Delta_H}{\Sigma HL}\right)} \geq \sqrt{\frac{\pi^2 EI}{L^2}\left(\frac{\Delta_H}{1.7HL}\right)} \qquad \text{(C-A-7-5)}$$

It is possible that certain columns, having only a small contribution to the lateral load resistance in the overall frame, will have a K_2 value less than 1.0 based on the term to the left of the inequality. The limit on the right-hand side is a minimum value for K_2 that accounts for the interaction between sidesway and non-*sidesway buckling* (ASCE Task Committee on Effective Length, 1997; White and Hajjar, 1997b). The term H is the shear in the column under consideration, produced by the lateral forces used to compute Δ_H.

Equation C-A-7-5 can be reformulated to obtain the column buckling load, P_{e2}, as

$$P_{e2} = \left(\frac{\Sigma HL}{\Delta_H}\right)\frac{P_r}{\Sigma P_r}\left(0.85 + 0.15R_L\right) \le 1.7HL/\Delta_H \qquad \text{(C-A-7-6)}$$

R_L is the ratio of the vertical column load for all leaning columns in the story to the vertical load of all the columns in the story:

$$R_L = \frac{\Sigma P_{r\ leaning\ columns}}{\Sigma P_{r\ all\ columns}} \qquad \text{(C-A-7-7)}$$

The purpose of R_L is to account for the influence of P-δ effects on the sidesway stiffness of the columns in a story. ΣP_r in Equations C-A-7-5 and C-A-7-6 includes all columns in the story, including any leaning columns, and P_r is for the column under consideration. The column buckling load, P_{e2}, calculated from Equation C-A-7-6 may be larger than π^2EI/L^2 but may not be larger than the limit on the righthand side of this equation.

The story stiffness approach is the basis for the B_2 calculation (for P-Δ effects) in Appendix 8. In Equation A-8-7 in Appendix 8, the buckling load for the story is expressed in terms of the story drift ratio, Δ_H/L, from a first-order lateral load analysis at a given applied lateral load level. In preliminary design, Δ_H/L may be taken in terms of a target maximum value for this drift ratio. This approach focuses the engineer's attention on the most fundamental stability requirement in building frames: providing adequate overall story stiffness in relation to the total vertical load, $\alpha\Sigma P_r$, supported by the story. The elastic story stiffness expressed in terms of the drift ratio and the total horizontal load acting on the story is $H/(\Delta_H/L)$.

Story Buckling Approach. For the story buckling approach, K_2 is defined as

$$K_2 = \sqrt{\frac{\pi^2EI}{L^2}\frac{1}{P_r}\left(\frac{\Sigma P_r}{\Sigma\dfrac{\pi^2EI}{\left(K_{n2}L\right)^2}}\right)} \ge \sqrt{\frac{5}{8}}K_{n2} \qquad \text{(C-A-7-8)}$$

where K_{n2} is defined as the value of K determined directly from the alignment chart in Figure C-A-7.2.

The value of K_2 calculated from the above equation may be less than 1.0. The limit on the righthand side is a minimum value for K_2 that accounts for the interaction between sidesway and non-sidesway buckling (ASCE Task Committee on Effective Length, 1997; White and Hajjar, 1997b; Geschwindner, 2002; AISC-SSRC, 2003a). Other approaches to calculating K_2 are given in previous editions of this Commentary and the foregoing references.

Equation C-A-7-8 can be reformulated to obtain the column buckling load, P_{e2}, as

$$P_{e2} = \left(\frac{P_r}{\Sigma P_r}\right)\Sigma\frac{\pi^2EI}{\left(K_{n2}L\right)^2} \le 1.6\frac{\pi^2EI}{\left(K_{n2}L\right)^2} \qquad \text{(C-A-7-9)}$$

ΣP_r in Equations C-A-7-8 and C-A-7-9 includes all columns in the story, including any leaning columns, and P_r is for the column under consideration. The column buckling load, P_{e2}, calculated from Equation C-A-7-9 may be larger than $\pi^2 EI/L^2$ but may not be larger than the limit on the righthand side of this equation.

LeMessurier Approach: Another simple approach for the determination of K_2 (LeMessurier, 1995), based only on the column end moments, is:

$$K_2 = \left[1+\left(1-\frac{M_1}{M_2}\right)^4\right]\sqrt{1+\frac{5}{6}\frac{\Sigma P_{r\ leaning\ columns}}{\Sigma P_{r\ nonleaning\ columns}}} \qquad \text{(C-A-7-10)}$$

In this equation, M_1 and M_2 are the smaller and larger end moments, respectively, in the column. These moments are determined from a first-order analysis of the frame under lateral load. Column inelasticity is considered in the derivation of this equation. The unconservative error in P_c using the above equation is less than 3%, as long as the following inequality is satisfied:

$$\left(\frac{\Sigma P_{y\ nonleaning\ columns}}{\Sigma HL/\Delta_H}\right)\left(\frac{\Sigma P_{r\ all\ columns}}{\Sigma P_{r\ nonleaning\ columns}}\right) \le 0.45 \qquad \text{(C-A-7-11)}$$

Some Conclusions Regarding K

Column design using *K*-factors can be tedious and confusing for complex building structures containing leaning columns and/or combined framing systems, particularly where column inelasticity is considered. This confusion can be avoided if the direct analysis method of Chapter C is used, where P_c is always based on $K = 1.0$. Also, the first-order analysis method of Appendix 7, Section 7.3 is based on the direct analysis method, and hence also uses $K = 1.0$ in the determination of P_c. Furthermore, under certain circumstances where $\Delta_{2nd\text{-}order}/\Delta_{1st\text{-}order}$ or B_2 is sufficiently low, $K = 1.0$ may be assumed in the effective length method as specified in Appendix 7, Section 7.2.3(b).

Comparison of the Effective Length Method and the Direct Analysis Method

Figure C-C2.5(a) shows a plot of the in-plane interaction equation for the effective length method, where the anchor point on the vertical axis, P_{nKL}, is determined using an effective length, KL. Also shown in this plot is the same interaction equation with the first term based on the yield load, P_y. For W-shapes, this in-plane beam-column interaction equation is a reasonable estimate of the internal force state associated with full cross-section plastification.

The P versus M response of a typical member, obtained from second-order spread-of-plasticity analysis and labeled "actual response," indicates the maximum axial force, P_r, that the member can sustain prior to the onset of instability. The load-deflection response from a second-order elastic analysis using the nominal geometry and elastic stiffness, as conducted with the effective length method, is also shown. The "actual response" curve has larger moments than the above second-order elastic curve due to the combined effects of distributed yielding and geometric imperfections, which are not included in the second-order elastic analysis.

In the effective length method, the intersection of the second-order elastic analysis curve with the P_{nKL} interaction curve determines the member strength. The plot in Figure C-C2.5(a) shows that the effective length method is calibrated to give a resultant axial strength, P_c, consistent with the actual response. For slender columns, the calculation of the effective length, KL, (and P_{nKL}) is critical to achieving an accurate solution when using the effective length method.

One consequence of the procedure is that it underestimates the actual internal moments under the factored loads, as shown in Figure C-C2.5(a). This is inconsequential for the beam-column in-plane strength check since P_{nKL} reduces the effective strength in the correct proportion. However, the reduced moment can affect the design of the beams and connections, which provide rotational restraint to the column. This is of greatest concern when the calculated moments are small and axial loads are large, such that P-Δ moments induced by column out-of-plumbness can be significant.

The important difference between the direct analysis method and the effective length method is that where the former uses reduced stiffness in the analysis and $K = 1.0$ in the beam-column strength check, the latter uses nominal stiffness in the analysis and K from a sidesway buckling analysis in the beam-column strength check. The direct analysis method can be more sensitive to the accuracy of the second-order elastic analysis since analysis at reduced stiffness increases the magnitude of second-order effects. However, this difference is important only at high sidesway amplification levels; at those levels the accuracy of the calculation of K for the effective length method also becomes important.

7.3. FIRST-ORDER ANALYSIS METHOD

This section provides a method for designing frames using a first-order elastic analysis with $K = 1.0$, provided the limitations in Appendix 7, Section 7.3.1 are satisfied. This method is derived from the direct analysis method by mathematical manipulation (Kuchenbecker et al., 2004) so that the second-order internal forces and moments are determined directly as part of the first-order analysis. It is based upon a target maximum drift ratio, Δ/L, and assumptions, including:

(1) The sidesway amplification $\Delta_{2nd\ order}/\Delta_{1st\ order}$ (or B_2) is assumed equal to 1.5.
(2) The initial out-of-plumbness in the structure is assumed as $\Delta_o/L = 1/500$, but the initial out-of-plumbness does not need to be considered in the calculation of Δ.

The first-order analysis is performed using the nominal (unreduced) stiffness; stiffness reduction is accounted for solely within the calculation of the amplification factors. The nonsway amplification of beam-column moments is addressed within the procedure specified in this Section by applying the B_1 amplifier of Appendix 8, Section 8.2.1 conservatively to the total member moments. In many cases involving beam-columns not subject to transverse loading between supports in the plane of bending, $B_1 = 1.0$.

The target maximum drift ratio, corresponding to drifts under either the LRFD strength load combinations or 1.6 times the ASD strength load combinations, can

be assumed at the start of design to determine the additional lateral load, N_i. As long as that drift ratio is not exceeded at any strength load level, the design will be conservative.

Kuchenbecker et al. (2004) present a general form of this method. If the above approach is employed, it can be shown that for $B_2 \leq 1.5$ and $\tau_b = 1.0$ the required additional lateral load to be applied with other lateral loads in a first-order analysis of the structure, using the nominal (unreduced) stiffness, is:

$$N_i = \left(\frac{B_2}{1-0.2B_2}\right)\frac{\Delta}{L}Y_i \geq \left(\frac{B_2}{1-0.2B_2}\right)0.002Y_i \qquad \text{(C-A-7-12)}$$

where these variables are as defined in Chapter C, Appendix 7 and Appendix 8. Note that if B_2 (based on the unreduced stiffness) is set to the 1.5 limit prescribed in Chapter C, then,

$$N_i = 2.1\alpha\left(\frac{\Delta}{L}\right)Y_i \geq 0.0042Y_i \qquad \text{(C-A-7-13)}$$

This is the additional lateral load required in Appendix 7, Section 7.3.2. The minimum value of N_i of $0.0042Y_i$ is based on the assumption of a minimum first-order drift ratio due to any effects of $\Delta/L = 1/500$.

APPENDIX 8

APPROXIMATE SECOND-ORDER ANALYSIS

Section C2.1(2) states that a second-order analysis that captures both P-Δ and P-δ effects is required. As an alternative to a rigorous second-order analysis, the amplification of first-order analysis forces and moments by the approximate procedure in this Appendix is permitted. The main approximation in this technique is that it evaluates P-Δ and P-δ effects separately, through separate multipliers B_2 and B_1, respectively, considering the influence of P-δ effects on the overall response of the structure (which, in turn, influences P-Δ) only indirectly, through the factor R_M. A rigorous second-order elastic analysis is recommended for accurate determination of the frame internal forces when B_1 is larger than 1.2 in members that have a significant effect on the response of the overall structure.

This procedure uses a first-order elastic analysis with amplification factors that are applied to the first-order forces and moments so as to obtain an estimate of the second-order forces and moments. In the general case, a member may have first-order load effects not associated with *sidesway* that are multiplied by a factor B_1, and first-order load effects produced by sidesway that are multiplied by a factor B_2. The factor B_1 estimates the P-δ effects on the nonsway moments in compression members. The factor B_2 estimates the P-Δ effects on the forces and moments in all members. These effects are shown graphically in Figures C-C2.1 and C-A-8.1.

The factor B_2 applies only to internal forces associated with sidesway and is calculated for an entire story. In building frames designed to limit Δ_H/L to a predetermined value, the factor B_2 may be found in advance of designing individual members by using the target

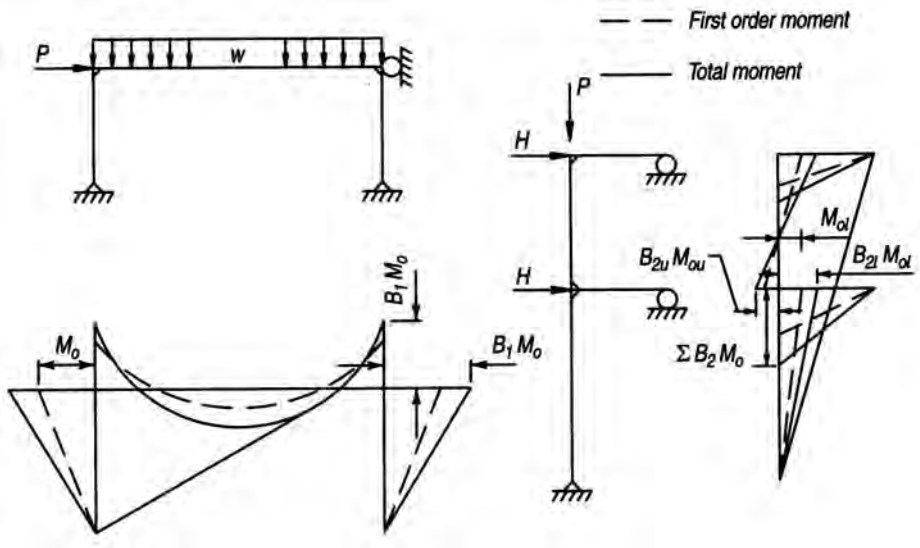

Fig. C-A-8.1. Moment amplification.

maximum limit on Δ_H/L within Equation A-8-7. Drift limits may also be set for design of various categories of buildings so that the effect of secondary bending is reduced (ATC, 1978; Kanchanalai and Lu, 1979). However, drift limits alone are not sufficient to allow stability effects to be neglected (LeMessurier, 1977).

In determining B_2 and the second-order effects on the lateral load resisting system, it is important that Δ_H include not only the interstory displacement in the plane of the lateral load resisting system, but also any additional displacement in the floor or roof diaphragm or horizontal framing system that may increase the overturning effect of columns attached to and "leaning" against the horizontal system. Either the maximum displacement or a weighted average displacement, weighted in proportion to column load, should be considered.

The current Specification provides only one equation (Equation A-8-7) for determining the elastic bucking strength of a story; this formula is based on the lateral stiffness of the story as determined from a first-order analysis and is applicable to all buildings. The 2005 AISC *Specification for Structural Steel Buildings* (AISC, 2005a) offered a second formula (Equation C2-6a in that edition), based on the lateral buckling strength of individual columns, applicable only to buildings in which lateral stiffness is provided entirely by moment frames. That equation is:

$$\Sigma P_{e2} = \Sigma \frac{\pi^2 EI}{(K_2 L)^2} \qquad \text{(C-A-8-1)}$$

where

ΣP_{e2} = elastic buckling strength of the story, kips (N)
L = story height, in. (mm)
K_2 = effective length factor in the plane of bending, calculated from a *sidesway buckling* analysis

This equation for the story elastic buckling strength was eliminated from the 2010 Specification because of its limited applicability, the difficulty involved in calculating K_2 correctly, and the greater ease of application of the story stiffness-based formula. Additionally, with the deletion of this equation, the symbol ΣP_{e2} was changed to $P_{e\ story}$ since the story buckling strength is not the summation of the strengths of individual columns, as implied by the earlier symbol.

First-order member forces and moments with the structure restrained against sidesway are labeled P_{nt} and M_{nt}; the first-order effects of lateral translation are labeled P_{lt} and M_{lt}. For structures where gravity load causes negligible lateral translation, P_{nt} and M_{nt} are the effects of gravity load and P_{lt} and M_{lt} are the effects of lateral load. In the general case, P_{nt} and M_{nt} are the results of an analysis with the structure restrained against sidesway; P_{lt} and M_{lt} are from an analysis with the lateral reactions from the first analysis (as used to find P_{nt} and M_{nt}) applied as lateral loads. Algebraic addition of the two sets of forces and moments after application of multipliers B_1 and B_2 as specified in Equations A-8-1 and A-8-2 gives reasonably accurate values of the overall second-order forces and moments.

The B_2 multiplier is applicable to forces and moments P_{lt} and M_{lt} in all members (including beams, columns, bracing diagonals and shear walls) that participate in resisting lateral load. P_{lt} and M_{lt} will be zero in members that do not participate in resisting lateral load;

hence B_2 will have no effect on them. The B_1 multiplier is applicable only to compression members.

If B_2 for a particular direction of translation does not vary significantly among the stories of a building, it will be convenient to use the maximum value for all stories, leading to just two B_2 values, one for each direction, for the entire building. Where B_2 does vary significantly between stories, the multiplier for beams between stories should be the larger value.

When first-order end moments in columns are magnified by B_1 and B_2 factors, equilibrium requires that they be balanced by moments in the beams that connect to them (for example, see Figure C-A-8.1). The B_2 multiplier does not cause any difficulty in this regard, since it is applied to all members. The B_1 multiplier, however, is applied only to compression members; the associated second-order internal moments in the connected members can be accounted for by amplifying the moments in those members by the B_1 value of the compression member (using the largest B_1 value if there are two or more compression members at the joint). Alternatively, the difference between the magnified moment (considering B_1 only) and the first-order moment in the compression member(s) at a given joint may be distributed to any other moment-resisting members attached to the compression member (or members) in proportion to the relative stiffness of those members. Minor imbalances may be neglected, based upon engineering judgment. Complex conditions may be treated more expediently with a rigorous second-order analysis.

In braced frames and moment frames, P_c is governed by the maximum slenderness ratio regardless of the plane of bending, if the member is subject to significant *biaxial bending*, or the provisions in Section H1.3 are not utilized. Section H1.3 is an alternative approach for checking beam-column strength that provides for the separate checking of beam-column in-plane and out-of-plane stability in members predominantly subject to bending within the plane of the frame. However, P_{e1} expressed by Equation A-8-5 is always calculated using the slenderness ratio in the plane of bending. Thus, when flexure in a beam-column is about the strong axis only, two different values of slenderness ratio may be involved in the amplified first-order elastic analysis and strength check calculations.

The factor R_M in Equation A-8-7 accounts for the influence of P-δ effects on sidesway amplification. R_M can be taken as 0.85 as a lower bound value for stories that include moment frames (LeMessurier, 1977); $R_M = 1$ if there are no moment frames in the story. Equation A-8-8 can be used for greater precision between these extreme values.

Second-order internal forces from separate structural analyses cannot normally be combined by superposition since second-order amplification is a nonlinear effect based on the total axial forces within the structure; therefore, a separate analysis must be conducted for each load combination considered in the design. However, in the amplified first-order elastic analysis procedure of Appendix 8, the first-order internal forces, calculated prior to amplification may be superimposed to determine the total first-order internal forces.

Coefficient C_m and Effective Length Factor K

Equations A-8-3 and A-8-4 are used to approximate the maximum second-order moments in compression members with no relative joint translation and no transverse loads between the ends of the member. Figure C-A-8.2 compares the approximation for C_m in Equation A-8-4 to the exact theoretical solution for beam-columns subjected to applied end moments

(Chen and Lui, 1987). The approximate and analytical values of C_m are plotted versus the end-moment ratio M_1/M_2 for several values of P/P_e ($P_e = P_{e1}$ with $K = 1$). The corresponding approximate and analytical solutions are shown in Figure C-A-8.3 for the maximum second-order elastic moment within the member, M_r, versus the axial load level, P/P_e, for several values of the end moment ratio, M_1/M_2.

For beam-columns with transverse loadings, the second-order moment can be approximated for simply supported members with

$$C_m = 1 + \Psi\left(\frac{\alpha P_r}{P_{e1}}\right) \qquad \text{(C-A-8-2)}$$

where

$$\Psi = \frac{\pi^2 \delta_o EI}{M_o L^2} - 1 \qquad \text{(C-A-8-3)}$$

δ_o = maximum deflection due to transverse loading, in. (mm)

M_o = maximum first-order moment within the member due to the transverse loading, kip-in. (N-mm)

α = 1.0 (LRFD) or 1.6 (ASD)

For restrained ends, some limiting cases are given in Table C-A-8.1 together with two cases of simply supported beam-columns (Iwankiw, 1984). These values of C_m are always

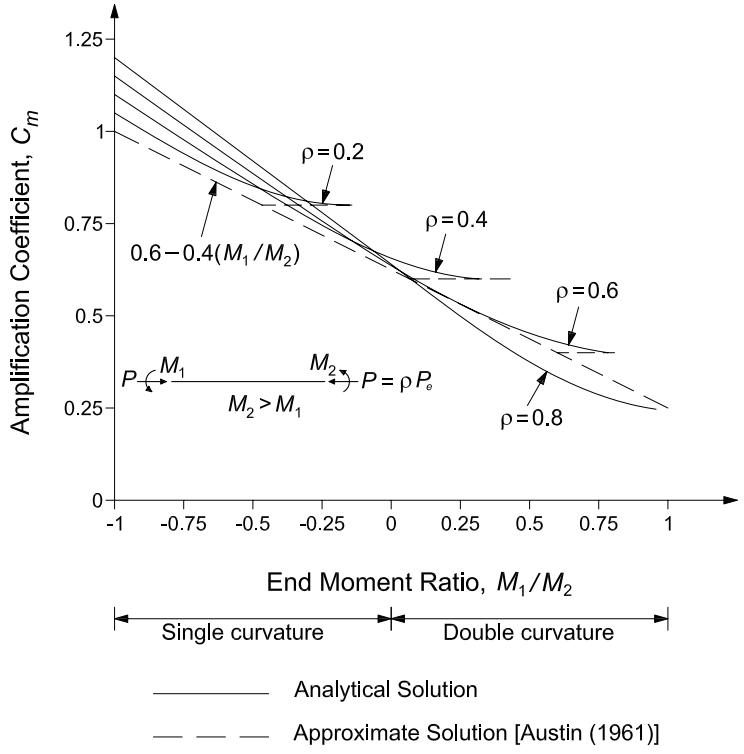

Fig. C-A-8.2. Equivalent moment factor, C_m*, for beam-columns subjected to applied end moments.*

used with the maximum moment in the member. For the restrained-end cases, the values of B_1 are most accurate if values of $K < 1.0$, corresponding to the member end conditions, are used in calculating P_{e1}.

In lieu of using the equations above, the use of $C_m = 1.0$ is conservative for all transversely loaded members. It can be shown that the use of $C_m = 0.85$ for members with restrained ends, specified in previous Specifications, can sometimes result in a significant underestimation of the internal moments. Therefore, the use of $C_m = 1.0$ is recommended as a simple conservative approximation for all cases involving transversely loaded members.

In second-order analysis by amplification of the results of first-order analysis, the effective length factor, K, is used in the determination of the elastic critical buckling load, P_{e1}, for a member. This elastic critical buckling load is then used for calculation of the corresponding amplification factor B_1.

B_1 is used to estimate the P-δ effects on the nonsway moments, M_{nt}, in compression members. K_1 is calculated in the plane of bending on the basis of no translation of the ends of the member and is normally set to 1.0, unless a smaller value is justified on the basis of analysis.

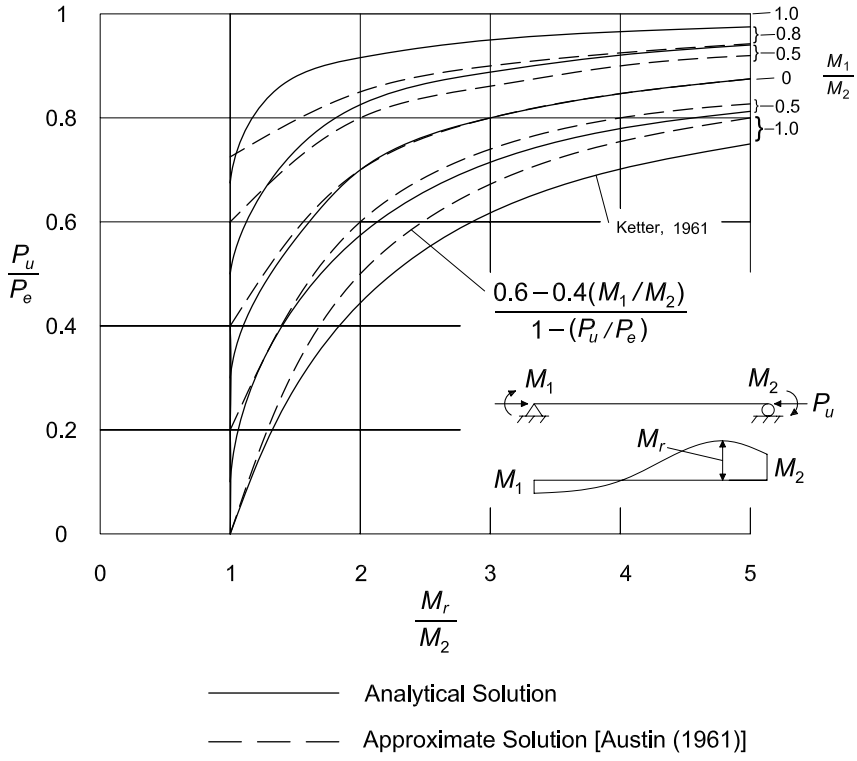

Fig. C-A-8.3. Maximum second-order moments, M_r*, for beam-columns subjected to applied end moments.*

TABLE C-A-8.1
Amplification Factors ψ and C_m

Case	Ψ	C_m
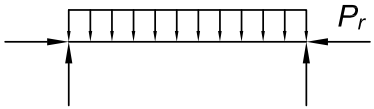	0	1.0
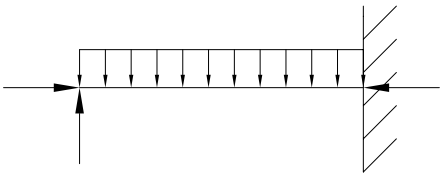	−0.4	$1-0.4\frac{\alpha P_r}{P_{e1}}$
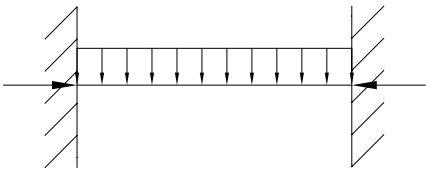	−0.4	$1-0.4\frac{\alpha P_r}{P_{e1}}$
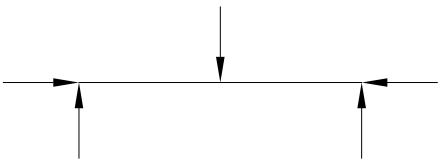	−0.2	$1-0.2\frac{\alpha P_r}{P_{e1}}$
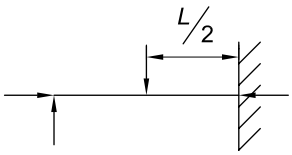	−0.3	$1-0.3\frac{\alpha P_r}{P_{e1}}$
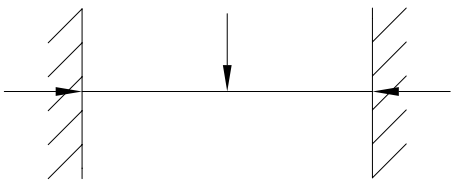	−0.2	$1-0.2\frac{\alpha P_r}{P_{e1}}$

Since the amplified first-order elastic analysis involves the calculation of elastic buckling loads as a measure of frame and column stiffness, only elastic K factors are appropriate for this use.

Summary—Application of Multipliers B_1 and B_2

There is a single B_2 value for each story and each direction of lateral translation of the story, say B_{2X} and B_{2Y} for the two global directions. Multiplier B_{2X} is applicable to all axial and shear forces and moments produced by story translation in the global X direction. Thus, in the common case where gravity load produces no lateral translation and all X translation is the result of lateral load in the X direction, B_{2X} is applicable to all axial forces and moments produced by lateral load in the global X direction. Similarly, B_{2Y} is applicable in the Y direction.

Note that B_{2X} and B_{2Y} are associated with global axes X and Y and the direction of story translation or loading, but are completely unrelated to the direction of bending of individual members. Thus, for example, if lateral load or translation in the global X direction causes moments M_x and M_y about member axes x and y in a particular member, B_{2X} must be applied to both M_x and M_y.

There is a separate B_1 value for every member subject to compression and flexure and each direction of bending of the member, say B_{1x} and B_{1y} for the two member axes. Multiplier B_{1x} is applicable to the member x-axis moment, regardless of the load that causes that moment. Similarly, B_{1y} is applicable to the member y-axis moment, regardless of the load that causes that moment.

REFERENCES

AASHTO (2002), *Standard Specifications for Highway Bridges*, 17th Ed., American Association of State Highway and Transportation Officials, Washington, DC.

AASHTO (2010), *LRFD Bridge Design Specifications*, 5th Ed., American Association of State Highway and Transportation Officials, Washington, DC.

ACI (1997), *Prediction of Creep, Shrinkage and Temperature Effects in Concrete Structures,* ACI 209R-92, American Concrete Institute, Farmington Hills, MI.

ACI (2001), *Code Requirements for Nuclear Safety Related Concrete Structures*, ACI 349-01, American Concrete Institute, Farmington Hills, MI.

ACI (2002), *Building Code Requirements for Structural Concrete*, ACI 318-02 and ACI 318M-02, American Concrete Institute, Farmington Hills, MI.

ACI (2005), *Specification for Structural Concrete*, ACI 301-05, American Concrete Institute, Farmington Hills, MI.

ACI (2006), *Specifications for Tolerances for Concrete Construction and Materials*, ACI 117-06, American Concrete Institute, Farmington Hills, MI.

ACI (2008), *Building Code Requirements for Structural Concrete*, ACI 318-08 and ACI 318M-08, American Concrete Institute, Farmington Hills, MI.

AISC (1969), *Specification for the Design, Fabrication, and Erection of Structural Steel for Buildings*, American Institute of Steel Construction, Chicago, IL.

AISC (1973), "Commentary on Highly Restrained Welded Connections," *Engineering Journal*, American Institute of Steel Construction, Vol. 10, No. 3, 3rd Quarter, pp. 61–73.

AISC (1975), *Australian Standard AS1250*, Australian Institute of Steel Construction, Sydney, Australia.

AISC (1978), *Specification for the Design, Fabrication, and Erection of Structural Steel for Buildings*, American Institute of Steel Construction, Chicago, IL.

AISC (1986), *Load and Resistance Factor Design Specification for Structural Steel Buildings*, American Institute of Steel Construction, Chicago, IL.

AISC (1989), *Specification for Structural Steel Buildings—Allowable Stress Design and Plastic Design*, American Institute of Steel Construction, Chicago, IL.

AISC (1993), *Load and Resistance Factor Design Specification for Structural Steel Buildings*, American Institute of Steel Construction, Chicago, IL.

AISC (1997a), *A Guide to Engineering and Quality Criteria for Steel Structures*, American Institute of Steel Construction, Chicago, IL.

AISC (1997b), "AISC Advisory Statement on Mechanical Properties Near the Fillet of Wide Flange Shapes and Interim Recommendations, January 10, 1997," *Modern Steel Construction*, American Institute of Steel Construction, Chicago, IL, February, p. 18.

AISC (2000a), *Specification for the Design of Steel Hollow Structural Sections*, American Institute of Steel Construction, Chicago, IL.

AISC (2000b), *Load and Resistance Factor Design Specification for Structural Steel Buildings,* December 27, 1999, American Institute of Steel Construction, Chicago, IL.

AISC (2005a), *Specification for Structural Steel Buildings*, ANSI/AISC 360-05, American Institute of Steel Construction, Chicago, IL.

AISC (2005b), *Steel Construction Manual,* 13th Ed., American Institute of Steel Construction, Chicago, IL.

AISC (2005c), *Design Examples*, V13.1, **www.aisc.org**.

AISC (2006a), *Seismic Design Manual*, American Institute of Steel Construction, Chicago, IL.

AISC (2006b), *Standard for Steel Building Structures*, AISC 201-06, Certification Program for Structural Steel Fabricators, American Institute of Steel Construction, Chicago, IL.

AISC (2010a), *Code of Standard Practice for Steel Buildings and Bridges,* AISC 303-10, American Institute of Steel Construction, Chicago, IL.

AISC (2010b), *Seismic Provisions for Structural Buildings*, American Institute of Steel Construction, Chicago, IL.

AISC-SSRC (2003a), "Basic Design for Stability: Lecture 3—Frame Stability—Alignment Charts and Modifications," American Institute of Steel Construction and Structural Stability Research Council, Chicago, IL.

AISC-SSRC (2003b), "Background and Illustrative Examples on Proposed Direct Analysis Method for Stability Design of Moment Frames," Technical White Paper, AISC Technical Committee 10, AISC-SSRC Ad Hoc Committee on Frame Stability, American Institute of Steel Construction, Chicago, IL.

AISI (1969), *Specification for the Design of Cold-Formed Steel Structural Members*, American Iron and Steel Institute, Washington, DC.

AISI (1970), "Interior Corrosion of Structural Steel Closed Sections," Bulletin 18, February, American Iron and Steel Institute, Washington, DC.

AISI (1979), *Fire-Safe Structural Design A Design Guide*, American Iron and Steel Institute, Washington, DC.

AISI (2001), *North American Specification for the Design of Cold-Formed Steel Structural Members*, American Iron and Steel Institute, Washington, DC.

AISI (2007), *North American Specification for the Design of Cold-Formed Steel Structural Members*, ANSI/AISI Standard S100 2007, Washington, DC.

Allan, R.N. and Fisher, J.W. (1968), "Bolted Joints with Oversize and Slotted Holes," *Journal of the Structural Division*, ASCE, Vol. 94, No. ST9, September, pp. 2061–2080.

Amrine, J.J. and Swanson, J.A. (2004), "Effects of Variable Pretension on Bolted Connection Behavior," *Engineering Journal*, AISC, Vol. 41, No. 3, 3rd Quarter, pp. 107–116.

Ang, A.H-S. and Tang, H.T. (1984), *Probability Concepts in Engineering Planning and Design, Vol.II: Decision, Risk and Reliability*, John Wiley & Sons Inc., New York, NY.

Ang, K.M. and Morris, G.A. (1984), "Analysis of Three-Dimensional Frames with Flexible Beam-Column Connections," *Canadian Journal of Civil Engineering*, Vol. 11, No. 2, pp. 245–254.

API (1993), *Recommended Practice for Planning, Designing and Constructing Fixed Offshore Platforms—Load and Resistance Factor Design*, 1st Ed., American Petroleum Institute, Washington, DC, July.

ASCE (1971), *Plastic Design in Steel, A Guide and a Commentary*, ASCE Manuals and Reports on Engineering Practice No. 41, American Society of Civil Engineers, New York, NY.

ASCE (1979), *Structural Design of Tall Steel Buildings*, American Society of Civil Engineers, New York, NY.

ASCE (1981), "Planning and Environmental Criteria for Tall Buildings, A Monograph on Planning and Design of Tall Buildings," Vol. PC, Chapter PC-13, American Society of Civil Engineers, New York, NY.

ASCE (1999), *Specification for Structural Steel Beams with Web Openings*, ASCE/SEI 23-97, American Society of Civil Engineers, Reston, VA.

ASCE (2000), *Design of Latticed Steel Transmission Structures*, ASCE 10-97, American Society of Civil Engineers, Reston, VA.

ASCE (2003), *Seismic Evaluation of Existing Buildings*, ASCE/SEI 31-03, American Society of Civil Engineers, Reston, VA.

ASCE (2005a), *Standard Calculation Methods for Structural Fire Protection*, ASCE/SEI/SFPE 29-05, American Society of Civil Engineers, Reston, VA.

ASCE (2005b), *Minimum Design Loads for Buildings and Other Structures*, ASCE/SEI 7-05, American Society of Civil Engineers, Reston, VA.

ASCE (2006), *Seismic Rehabilitation of Existing Buildings*, ASCE/SEI 41-06, American Society of Civil Engineers, Reston, VA.

ASCE (2010), *Minimum Design Loads for Buildings and Other Structures*, ASCE/SEI 7-10, American Society of Civil Engineers, Reston, VA.

ASCE Task Committee on Design Criteria for Composite Structures in Steel and Concrete (1992a), "Proposed Specification for Structural Steel Beams with Web Openings," *Journal of Structural Engineering*, ASCE, Vol. 118, No. ST12, December, pp. 3,315–3,324.

ASCE Task Committee on Design Criteria for Composite Structures in Steel and Concrete (1992b), "Commentary on Proposed Specification for Structural Steel Beams with Web Openings," *Journal of Structural Engineering*, ASCE, Vol. 118, No. ST12, December, pp. 3,325–3,349.

ASCE Task Committee on Drift Control of Steel Building Structures (1988), "Wind Drift Design of Steel-Framed Buildings: State of the Art," *Journal of the Structural Division*, ASCE, Vol. 114, No. 9, pp. 2,085–2,108.

ASCE Task Committee on Effective Length (1997), *Effective Length and Notional Load Approaches for Assessing Frame Stability: Implications for American Steel Design*, American Society of Civil Engineers, New York, NY.

Aslani, F. and Goel, S.C. (1991), "An Analytical Criteria for Buckling Strength of Built-Up Compression Members," *Engineering Journal*, AISC, Vol. 28, No. 4, 4th Quarter, pp. 159–168.

ASNT (2006a), *Personnel Qualification and Certification in Nondestructive Testing*, ASNT SNT-TC-1A-2003, American Society of Nondestructive Testing, Columbus, OH.

ASNT (2006b), *Standard for Qualification and Certification of Nondestructive Testing Personnel*, ANSI/ASNT CP-189-2006, American Society of Nondestructive Testing, Columbus, OH.

ASTM (2006), *Standard Test Methods for Determining Effects of Large Hydrocarbon Pool Fires on Structural Members and Assemblies*, ASTM E1529-06, American Society for Testing and Materials, West Conshohocken, PA.

ASTM (2007a), *Standard Practice for Safeguarding Against Warpage and Distortion During Hot-Dip Galvanizing of Steel Assemblies*, ASTM A384/A384M-07, American Society for Testing and Materials, West Conshohocken, PA.

ASTM (2007b), *Standard Practice for Castings, Carbon, Low-Alloy, and Martensitic Stainless Steel, Ultrasonic Examination Thereof*, ASTM A609/A609M-91(2007), American Society for Testing and Materials, West Conshohocken, PA.

ASTM (2007c), *Standard Specification for Carbon Steel Bolts and Studs, 60 000 PSI Tensile Strength*, ASTM A307-07b, American Society for Testing and Materials, West Conshohocken, PA.

ASTM (2007d), *Standard Specification for Cold-Formed Welded and Seamless Carbon Steel Structural Tubing in Rounds and Shapes*, ASTM A500/A500M-07, American Society for Testing and Materials, West Conshohocken, PA.

ASTM (2009a), *Standard Specification for Zinc Coating (Hot-Dip) on Iron and Steel Hardware*, ASTM A153/153M-09, American Society for Testing and Materials, West Conshohocken, PA.

ASTM (2009b), *Standard Practice for Providing High-Quality Zinc Coatings (Hot-Dip)*, ASTM A385/A385M-09, American Society for Testing and Materials, West Conshohocken, PA.

ASTM (2009c), *Standard Practice for Repair of Damaged and Uncoated Areas of Hot-Dip Galvanized Coatings*, ASTM A780/A780M-09, American Society for Testing and Materials, West Conshohocken, PA.

ASTM (2009d), *Standard Test Methods for Fire Tests of Building Construction and Materials*, ASTM E119-09c, American Society for Testing and Materials, West Conshohocken, PA.

ASTM (2009e), *Standard Specification for Zinc (Hot-Dip Galvanized) Coatings on Iron and Steel Products*, ASTM A123/A123M-09, American Society for Testing and Materials, West Conshohocken, PA.

ATC (1978), "Tentative Provisions for the Development of Seismic Regulations for Buildings," Publication 3-06, Applied Technology Council, Redwood City, CA, June.

Austin, W.J. (1961), "Strength and Design of Metal Beam-Columns," *Journal of the Structural Division*, ASCE, Vol. 87, No. ST4, April, pp. 1–32.

AWS (1977), *Criteria for Describing Oxygen-Cut Surfaces*, AWS C4.1-77, American Welding Society, Miami, FL.

AWS (2003), *Specification For The Qualification Of Welding Inspectors*, AWS B5.1:03, American Welding Society, Miami, FL.

AWS (2010), *Structural Welding Code—Steel*, AWS D1.1/D1.1M:2010, American Welding Society, Miami, FL.

Bartlett, R.M., Dexter, R.J., Graeser, M.D., Jelinek, J.J., Schmidt, B.J. and Galambos, T.V. (2003), "Updating Standard Shape Material Properties Database for Design and Reliability," *Engineering Journal*, AISC, Vol. 40, No. 1, pp. 2–14.

Basler, K. (1961), "Strength of Plate Girders in Shear," *Journal of the Structural Division*, ASCE, Vol. 104, No. ST9, October, pp. 151–180.

Basler, K., Yen, B.T., Mueller, J.A. and Thürlimann, B. (1960), "Web Buckling Tests on Welded Plate Girders," Welding Research Council Bulletin No. 64, September, New York, NY.

Basler, K. and Thürlimann, B. (1963), "Strength of Plate Girders in Bending," *Transactions of the American Society of Civil Engineers*, Vol. 128, Part II, pp. 655–682.

Bathe, K. (1995), *Finite Element Procedures*, Prentice-Hall, Upper Saddle River, NJ.

Beedle, L.S. (1958), *Plastic Design of Steel Frames*, John Wiley & Sons Inc., New York, NY.

Bigos, J., Smith, G.W., Ball, E.F. and Foehl, P.J. (1954), "Shop Paint and Painting Practice," *Proceedings of AISC National Engineering Conference*, Milwaukee, WI, American Institute of Steel Construction, Chicago, IL.

Bijlaard, F.S.K., Gresnigt, A.M. and van der Vegte, G.J. (eds.) (2005), *Connections in Steel Structures V*, Bouwen met Staal, Delft, the Netherlands.

Birkemoe, P.C. and Gilmor, M.I. (1978), "Behavior of Bearing-Critical Double-Angle Beam Connections," *Engineering Journal*, AISC, Vol. 15, No. 4, 4th Quarter, pp. 109–115.

Birnstiel, C. and Iffland, J.S.B. (1980), "Factors Influencing Frame Stability," *Journal of the Structural Division*, ASCE, Vol. 106, No. 2, pp. 491–504.

Bjorhovde, R. (1972), "Deterministic and Probabilistic Approaches to the Strength of Steel Columns," Ph.D. Dissertation, Lehigh University, Bethlehem, PA, May.

Bjorhovde, R. (1978), "The Safety of Steel Columns," *Journal of the Structural Division*, ASCE, Vol. 104, No. ST9, September, pp. 1371–1387.

Bjorhovde, R. and Birkemoe, P.C. (1979), "Limit States Design of HSS Columns," *Canadian Journal of Civil Engineering*, Vol. 6, No. 2, pp. 276–291.

Bjorhovde, R., Brozzetti, J. and Colson, A. (eds.) (1988), *Connections in Steel Structures: Behaviour, Strength and Design*, Elsevier Applied Science, London, England.

Bjorhovde, R. (1988), "Columns: From Theory to Practice," *Engineering Journal*, AISC, Vol. 25, No. 1, 1st Quarter, pp. 21–34.

Bjorhovde, R., Colson, A. and Brozzetti, J. (1990), "Classification System for Beam-to-Column Connections," *Journal of Structural Engineering*, ASCE, Vol. 116, No. 11, pp. 3,059–3,076.

Bjorhovde, R., Colson, A., Haaijer, G. and Stark, J.W.B. (eds.) (1992), *Connections in Steel Structures II: Behavior, Strength and Design*, American Institute of Steel Construction, Chicago, IL.

Bjorhovde, R., Colson, A. and Zandonini, R. (eds.) (1996), *Connections in Steel Structures III: Behaviour, Strength and Design*, Pergamon Press, London, England.

Bjorhovde, R., Goland, L.J. and Benac, D.J. (1999), "Tests of Full-Scale Beam-to-Column Connections," Southwest Research Institute, San Antonio, TX and Nucor-Yamato Steel Company, Blytheville, AR.

Bjorhovde, R. (2006), "Cold Bending of Wide-Flange Shapes for Construction," *Engineering Journal*, AISC, Vol. 43, No. 4, 4th Quarter, pp. 271–286.

Bjorhovde, R., Bijlaard, F.S.K. and Geschwindner, L.F. (eds.) (2008), *Connections in Steel Structures VI*, AISC, Chicago, IL.

Bleich, F. (1952), *Buckling Strength of Metal Structures*, McGraw-Hill, New York, NY.

Blodgett, O.W. (1967), "The Question of Corrosion in Hollow Steel Sections," *Welding Design Studies in Steel Structures*, Lincoln Electric Company, D610.163, August, Cleveland, OH.

Borello, D.J., Denavit, M.D. and Hajjar, J.F. (2009), "Behavior of Bolted Steel Slip-Critical Connections with Fillers," Report No. NSEL-017, Department of Civil and Environmental Engineering, University of Illinois at Urbana-Champaign, Urbana, IL, August.

Bradford, M.A., Wright, H.D. and Uy, B. (1998), "Local Buckling of the Steel Skin in Lightweight Composites Induced by Creep and Shrinkage," *Advances in Structural Engineering*, Vol. 2, No. 1, pp. 25–34.

Bradford, M.A., Loh, H.Y. and Uy, B. (2002), "Slenderness Limits for Filled Circular Steel Tubes," *Journal of Constructional Steel Research*, Vol. 58, No. 2, pp. 243–252.

Brandt, G.D. (1982), "A General Solution for Eccentric Loads on Weld Groups," *Engineering Journal*, AISC, Vol. 19, No. 3, 3rd Quarter, pp. 150–159.

Bridge, R.Q. (1998), "The Inclusion of Imperfections in Probability-Based Limit States Design," *Proceedings of the 1998 Structural Engineering World Congress*, San Francisco, CA, July.

Bridge, R.Q. and Bizzanelli, P. (1997), Imperfections in Steel Structures, *Proceedings—1997 Annual Technical Session, and Meeting*, Structural Stability Research Council, pp. 447–458.

Brockenbrough, R.B. and Johnston, B.G. (1981), *USS Steel Design Manual*, United States Steel Corporation, Pittsburgh, PA.

Brockenbrough, R.L. (1983), "Considerations in the Design of Bolted Joints for Weathering Steel," *Engineering Journal*, AISC, Vol. 20, No. 1, 1st Quarter, pp. 40–45.

Brosnan, D.P. and Uang, C.M. (1995), "Effective Width of Composite L-Beams in Buildings," *Engineering Journal*, AISC, Vol. 30, No. 2, 2nd Quarter, pp. 73–81.

Bruneau, M., Uang, C.-M. and Whittaker, A. (1998), *Ductile Design of Steel Structures*, McGraw Hill, New York, NY.

BSSC (2003), *NEHRP Recommended Provisions for Seismic Regulations for New Buildings and Other Structures*, FEMA 450-1, Building Seismic Safety Council, Washington, DC.

BSSC (2009), *NEHRP Recommended Seismic Provisions for New Buildings and Other Structures*, FEMA P-750, Building Seismic Safety Council, Washington, DC.

Buonopane, S.G. and Schafer, B.W. (2006), "Reliability of Steel Frames Designed with Advanced Analysis," *Journal of Structural Engineering*, ASCE, Vol. 132, No. 2, pp. 267–276.

Butler, L.J., Pal, S. and Kulak, G.L. (1972), "Eccentrically Loaded Welded Connections," *Journal of the Structural Division*, ASCE, Vol. 98, No. ST5, May, pp. 989–1,005.

Carter, C.J., Tide, R.H. and Yura, J.A. (1997), "A Summary of Changes and Derivation of LRFD Bolt Design Provisions," *Engineering Journal*, AISC, Vol. 34, No. 3, 3rd Quarter, pp. 75–81.

Carter, C.J. (1999), *Stiffening of Wide-Flange Columns at Moment Connections: Wind and Seismic Applications*, Design Guide 13, AISC, Chicago, IL.

CEN (1991), *Eurocode 1: Basis of Design and Actions on Structures*, EC1 1991-2-2, Comite Européen de Normalisation, Brussels, Belgium.

CEN (2003), *Eurocode 4: Design of Composite Steel and Concrete Structures*, Comite Européen de Normalisation, Brussels, Belgium.

CEN (2005), *Eurocode 3: Design of Steel Structures*, Comite Européen de Normalisation, Brussels, Belgium.

Charney, F.A. (1990), "Wind Drift Serviceability Limit State Design of Multi-story Buildings," *Journal of Wind Engineering and Industrial Aerodynamics*, Vol. 36, pp. 203–212.

Chen, W.F. and Kim, S.E. (1997), *LRFD Steel Design Using Advanced Analysis*, CRC Press, Boca Raton, FL.

Chen, P.W. and Robertson, L.E. (1972), "Human Perception Thresholds of Horizontal Motion," *Journal of the Structural Division*, ASCE, Vol. 98, No. ST8, August, pp. 1681–1695.

Chen, S. and Tong, G. (1994), "Design for Stability: Correct Use of Braces," *Steel Structures*, Journal of the Singapore Structural Steel Society, Vol. 5, No. 1, December, pp. 15–23.

Chen, W.F. and Atsuta, T. (1976), *Theory of Beam-Columns, Volume I: In-Plane Behavior and Design*, and *Volume II: Space Behavior and Design*, McGraw-Hill, New York, NY.

Chen, W.F. and Atsuta, T. (1977), *Theory of Beam Columns, Volume II: Space Behavior and Design*, McGraw-Hill, New York, NY.

Chen, W.F. and Lui, E.M. (1987), *Structural Stability: Theory and Implementation*, Elsevier, New York, NY.

Chen, W.F. and Lui, E.M. (1991), *Stability Design of Steel Frames*, CRC Press, Boca Raton, FL.

Chen, W.F. and Toma, S. (eds.) (1994), *Advanced Analysis of Steel Frames: Theory, Software and Applications*, CRC Press, Boca Raton, FL.

Chen, W.F. and Sohal, I. (1995), *Plastic Design and Second-Order Analysis of Steel Frames*, Springer Verlag, New York, NY.

Chen, W.F., Goto, Y. and Liew, J.Y.R. (1995), *Stability Design of Semi-Rigid Frames*, John Wiley & Sons, Inc., New York, NY.

Cheng, J.J.R. and Kulak, G.L. (2000), "Gusset Plate Connection to Round HSS Tension Members," *Engineering Journal*, AISC, Vol. 37, No. 4, 4th Quarter, pp. 133–139.

Chien, E.Y.L. and Ritchie, J.K. (1984), *Composite Floor Systems*, Canadian Institute of Steel Construction, Willowdale, Ontario, Canada.

Clarke, M.J., Bridge, R.Q., Hancock, G.J. and Trahair, N.S. (1992), "Advanced Analysis of Steel Building Frames," *Journal of Constructional Steel Research*, Vol. 23, No. 1–3, pp. 1–29.

Cooke, G.M.E. (1988), "An Introduction to the Mechanical Properties of Structural Steel at Elevated Temperatures," *Fire Safety Journal*, Vol. 13, pp. 45–54.

Cooney, R.C. and King, A.B. (1988), "Serviceability Criteria for Buildings," BRANZ Report SR14, Building Research Association of New Zealand, Porirua, New Zealand.

Cooper, P.B., Galambos, T.V. and Ravindra, M.K. (1978), "LRFD Criteria for Plate Girders," *Journal of the Structural Division*, ASCE, Vol. 104, No. ST9, September, pp. 1389–1407.

Crisfield, M.A. (1991), *Nonlinear Finite Element Analysis of Solids and Structures*, John Wiley & Sons, Inc., NY.

CSA (2004), *General Requirements for Rolled or Welded Structural Quality Steel/ Structural Quality Steel*, CAN/CSA-G40.20/G40.21-04, Canadian Standards Association, Mississauga, Ontario, Canada.

CSA (2009), *Limit States Design of Steel Structures*, CSA Standard S16-09, Canadian Standards Association, Rexdale, Ontario, Canada

Darwin, D. (1990), *Steel and Composite Beams with Web Openings*, Design Guide 2, AISC, Chicago, IL.

Davies, G. and Packer, J.A. (1982), "Predicting the Strength of Branch Plate—RHS Connections for Punching Shear," *Canadian Journal of Civil Engineering*, Vol. 9, pp. 458–467.

Dekker, N.W., Kemp, A.R. and Trinchero, P. (1995), "Factors Influencing the Strength of Continuous Composite Beams in Negative Bending," *Journal of Constructional Steel Research*, Vol. 34, Nos. 2–3, pp. 161–185.

Dexter, R.J. and Melendrez, M.I. (2000), "Through-Thickness Properties of Column Flanges in Welded Moment Connections," *Journal of Structural Engineering*, ASCE, Vol. 126, No. 1, pp. 24–31.

Dexter, R.J., Hajjar, J.F., Prochnow, S.D., Graeser, M.D., Galambos, T.V. and Cotton, S.C. (2001), "Evaluation of the Design Requirements for Column Stiffeners and Doublers and the Variation in Properties of A992 Shapes," *Proceedings of the North American Steel Construction Conference*, Fort Lauderdale, FL, May 9-12, 2001, AISC, Chicago, IL, pp. 14.1–14.21.

Dexter, R.J. and Altstadt, S.A. (2004), "Strength and Ductility of Tension Flanges in Girders," *Recent Developments in Bridge Engineering, Proceedings of the Second New York City Bridge Conference*, October 20-21, 2003, New York, NY, Mahmoud, K.M. (ed.), A.A. Balkema/Swets & Zeitlinger, Lisse, the Netherlands, pp. 67–81.

Disque, R.O. (1964), "Wind Connections with Simple Framing," *Engineering Journal*, AISC, Vol. 1, No. 3, July, pp. 101-103.

Dusicka, P. and Iwai, R. (2007), "Development of Linked Column Frame Lateral Load Resisting System," 2nd Progress Report for AISC and Oregon Iron Works, Portland State University, Portland, OR.

Earls, C.J. and Galambos, T.V. (1997), "Design Recommendations for Equal Leg Single Angle Flexural Members," *Journal of Constructional Steel Research*, Vol. 43, Nos. 1-3, pp. 65–85.

Easterling, W.S., Gibbings, D.R. and Murray, T.M. (1993), "Strength of Shear Studs in Steel Deck on Composite Beams and Joists," *Engineering Journal*, AISC, Vol. 30, No. 2, 2nd Quarter, pp. 44–55.

Easterling, W.S. and Gonzales, L. (1993), "Shear Lag Effects in Steel Tension Members," *Engineering Journal*, AISC, Vol. 30, No. 3, 3rd Quarter, pp. 77–89.

ECCS (1984), *Ultimate Limit States Calculations of Sway Frames With Rigid Joints*, Publications No. 33, European Convention for Constructional Steelwork, Rotterdam, the Netherlands.

ECCS (2001), *Model Code on Fire Engineering*, 1st Ed., European Convention for Constructional Steelwork Technical Committee 3, Brussels, Belgium.

Elgaaly, M. (1983), "Web Design under Compressive Edge Loads," *Engineering Journal*, AISC, Vol. 20, No. 4, 4th Quarter, pp. 153–171.

Elgaaly, M. and Salkar, R. (1991), "Web Crippling Under Edge Loading," *Proceedings of AISC National Steel Construction Conference*, Washington, DC.

Ellifritt, D.S., Wine, G., Sputo, T. and Samuel, S. (1992), "Flexural Strength of WT Sections," *Engineering Journal*, AISC, Vol. 29, No. 2, 2nd Quarter, pp. 67–74.

Ellingwood, B. and Leyendecker, E.V. (1978), "Approaches for Design Against Progressive Collapse," *Journal of the Structural Division*, ASCE, Vol. 104, No. 3, pp. 413–423.

Ellingwood, B.E., MacGregor, J.G., Galambos, T.V., and Cornell, C.A. (1982), "Probability-Based Load Criteria: Load Factors and Load Combinations," *Journal of the Structural Division*, ASCE, Vol. 108, No. 5, pp. 978–997.

Ellingwood, B., and Corotis, R.B. (1991), "Load Combinations for Building Exposed to Fires," *Engineering Journal*, AISC, Vol. 28, No. 1, pp. 37–44.

El-Zanaty, M.H., Murray, D.W. and Bjorhovde, R. (1980), "Inelastic Behavior Of Multistory Steel Frames," Structural Engineering Report No. 83, University of Alberta, Alberta, BC.

Felton, L.P. and Dobbs, M.W. (1967), "Optimum Design of Tubes for Bending and Torsion," *Journal of the Structural Division*, ASCE, Vol. 93, No. ST4, pp. 185–200.

FEMA (1995), *Interim Guidelines: Evaluation, Repair, Modification and Design of Welded Steel Moment Frame Structures*, Bulletin No. 267, Federal Emergency Management Agency, Washington, DC.

FEMA (1997), "Seismic Performance of Bolted and Riveted Connections" *Background Reports; Metallurgy, Fracture Mechanics, Welding, Moment Connections and Frame Systems Behavior*, Bulletin No. 288, Federal Emergency Management Agency, Washington, DC.

FEMA (2000), *Steel Moment-Frame Buildings: Design Criteria for New Buildings*, FEMA-350, Prepared by the SAC Joint Venture for the Federal Emergency Management Agency, Washington, DC.

FHWA (1999), "FHWA Demonstration Project Heat Straightening Repair for Damaged Steel Bridges," FHWA Report No. FHWA-IF-99-004, Federal Highway Administration, Washington, DC.

Fielding, D.J. and Huang, J.S. (1971), "Shear in Steel Beam-to-Column Connections," *The Welding Journal*, AWS, Vol. 50, No. 7, Research Supplement, pp. 313–326.

Fielding, D.J. and Chen, W.F. (1973), "Steel Frame Analysis and Connection Shear Deformation," *Journal of the Structural Division*, ASCE, Vol. 99, No. ST1, January, pp. 1–18.

Fisher, J.M. and West, M.A. (1997), *Erection Bracing of Low-Rise Structural Steel Buildings*, Design Guide 10, AISC, Chicago, IL.

Fisher, J.M. and Kloiber, L.A. (2006), *Base Plate and Anchor Rod Design*, 2nd Edition, Design Guide 1, AISC, Chicago, IL.

Fisher, J.W., Frank, K.H., Hirt, M.A. and McNamee, B.M. (1970), "Effect of Weldments on the Fatigue Strength of Beams," Report 102, National Cooperative Highway Research Program, Washington, DC.

Fisher, J.W., Albrecht, P.A., Yen, B.T., Klingerman, D.J. and McNamee, B.M. (1974), "Fatigue Strength of Steel Beams with Welded Stiffeners and Attachments," Report 147, National Cooperative Highway Research Program, Washington, DC.

Fisher, J.W., Galambos, T.V., Kulak, G.L. and Ravindra, M.K. (1978), "Load and Resistance Factor Design Criteria for Connectors," *Journal of the Structural Division*, ASCE, Vol. 104, No. ST9, September, pp. 1,427–1,441.

Frank, K.H. and Fisher, J.W. (1979), "Fatigue Strength of Fillet Welded Cruciform Joints," *Journal of the Structural Division*, ASCE, Vol. 105, No. ST9, September.

Frank, K.H. and Yura, J.A. (1981), "An Experimental Study of Bolted Shear Connections," FHWA/RD-81/148, Federal Highway Administration, Washington, DC, December.

Frater, G.S. and Packer, J.A. (1992a), "Weldment Design for RHS Truss Connections. I: Applications," *Journal of Structural Engineering*, ASCE, Vol. 118, No. 10, pp. 2,784–2,803.

Frater, G.S. and Packer, J.A. (1992b), "Weldment Design for RHS Truss Connections. II: Experimentation," *Journal of Structural Engineering*, ASCE, Vol. 118, No. 10, pp. 2,804–2,820.

Freeman, F.R. (1930), "The Strength of Arc-Welded Joints," *Proceedings of the Institution of Civil Engineers*, Vol. 231, London, England.

Freeman, S. (1977), "Racking Tests of High Rise Building Partitions," *Journal of the Structural Division*, ASCE, Vol. 103, No. 8, pp. 1,673–1,685.

Galambos, T.V. (1968a), *Structural Members and Frames*, Prentice-Hall, Englewood Cliffs, NJ.

Galambos, T.V. (1968b), "Deformation and Energy Absorption Capacity of Steel Structures in the Inelastic Range," Steel Research for Construction Bulletin No. 8, American Iron and Steel Institute.

Galambos. T.V. (1978), "Proposed Criteria for Load and Resistance Factor Design of Steel Building Structures," AISI Bulletin No. 27, American Iron and Steel Institute, Washington, DC, January.

Galambos, T.V., Ellingwood, B., MacGregor, J.G. and Cornell, C.A. (1982), "Probability-Based Load Criteria: Assessment of Current Design Practice," *Journal of the Structural Division*, ASCE, Vol. 108, No. ST5, May, pp. 959–977.

Galambos, T.V. (1983), "Reliability of Axially Loaded Columns," *Engineering Structures*, Vol. 5, No. 1, pp. 73–78.

Galambos, T.V. and Ellingwood, B. (1986), "Serviceability Limit States: Deflections," *Journal of the Structural Division*, ASCE, Vol. 112, No. 1, pp. 67–84.

Galambos, T.V. (1991), "Design of Axially Loaded Compressed Angles," *Proceedings of the Annual Technical Session and Meeting*, Chicago, IL, April 15-17, 1991, Structural Stability Research Council, Bethlehem, PA, pp. 353–367.

Galambos, T.V. (ed.) (1998), *Guide to Stability Design Criteria for Metal Structures*, 5th Ed., Structural Stability Research Council, John Wiley & Sons, Inc., New York, NY.

Galambos, T.V. (2001), "Strength of Singly Symmetric I-Shaped Beam-Columns," *Engineering Journal*, AISC, Vol. 38, No. 2, 2nd Quarter, pp. 65–77.

Galambos, T.V. and Surovek, A.E. (2008), *Structural Stability of Steel—Concepts and Applications for Structural Engineers*, John Wiley & Sons, Inc., New York, NY.

Geschwindner, L.F. (2002), "A Practical Approach to Frame Analysis, Stability and Leaning Columns," *Engineering Journal*, AISC, Vol. 39, No. 4, 4th Quarter, pp. 167–181.

Geschwindner, L.F. and Disque, R.O. (2005), "Flexible Moment Connections for Unbraced Frames Subject to Lateral Forces—A Return to Simplicity," *Engineering Journal*, AISC, Vol. 42, No. 2, 2nd Quarter, pp. 99–112.

Geschwindner, L.F. (2010a), "Notes on the Impact of Hole Reduction on the Flexural Strength of Rolled Beams," *Engineering Journal*, AISC, Vol. 47, No. 1, 1st Quarter, pp. 37–40.

Geschwindner, L.F. (2010b), "Discussion of Limit State Response of Composite Columns and Beam-Columns Part II: Application of Design Provisions for the 2005 AISC Specification," *Engineering Journal*, AISC, Vol. 47, No. 2, 2nd Quarter, pp. 131–139.

Geschwindner, L.F and Gustafson, K. (2010), "Single-Plate Shear Connection Design to Meet Structural Integrity Requirements," *Engineering Journal*, AISC, Vol. 47, No. 4, 3rd Quarter.

Gewain, R.G. and Troup, E.W.J. (2001), "Restrained Fire Resistance Ratings in Structural Steel Buildings," *Engineering Journal*, Vol. 38, No. 2, pp. 78–89.

Gibson, G.T. and Wake, B.T. (1942), "An Investigation of Welded Connections for Angle Tension Members," *The Welding Journal*, AWS, January, p. 44.

Giddings, T.W. and Wardenier, J. (1986), "The Strength and Behaviour of Statically Loaded Welded Connections in Structural Hollow Sections," CIDECT Monograph No. 6, Sections 1-10, British Steel Corporation Tubes Division, Corby, England.

Gioncu, V. and Petcu, D. (1997), "Available Rotation Capacity of Wide-Flange Beams and Beam-Columns, Part 1. Theoretical Approaches, and Part 2. Experimental and Numerical Tests," *Journal of Constructional Steel Research*, Vol. 43, Nos. 1-3, pp. 161–244.

Gjelsvik, A. (1981), *The Theory of Thin-Walled Bars*, John Wiley & Sons, Inc., New York, NY.

Goble, G.G. (1968), "Shear Strength of Thin Flange Composite Specimens," *Engineering Journal*, AISC, Vol. 5, No. 2, 2nd Quarter, pp. 62–65.

Gomez, I., Kanvinde, A., Kwan, Y.K. and Grondin, G. (2008), "Strength and Ductility of Welded Joints Subjected to Out-of-Plane Bending," Final Report to AISC, University of California, Davis, and University of Alberta, July.

Goverdhan, A.V. (1983), "A Collection of Experimental Moment Rotation Curves: Evaluation of Predicting Equations for Semi-Rigid Connections," M.S. Thesis, Vanderbilt University, Nashville, TN.

Graham, J.D., Sherbourne, A.N. and Khabbaz, R.N. (1959), "Welded Interior Beam-to-Column Connections," American Institute of Steel Construction, Chicago, IL.

Graham, J.D., Sherbourne, A.N., Khabbaz, R.N. and Jensen, C.D. (1960), "Welded Interior Beam-to-Column Connections," Welding Research Council, Bulletin No. 63, pp. 1–28.

Grant, J.A., Fisher, J.W. and Slutter, R.G. (1977), "Composite Beams with Formed Steel Deck," *Engineering Journal*, AISC, Vol. 14, No. 1, 1st Quarter, pp. 24-43.

Griffis, L.G. (1992), *Load and Resistance Factor Design of W-Shapes Encased in Concrete*, Design Guide 6, AISC, Chicago, IL.

Griffis, L.G. (1993), "Serviceability Limit States Under Wind Load," *Engineering Journal*, AISC, Vol. 30, No. 1, 1st Quarter, pp. 1–16.

Grondin, G., Jin, M. and Josi, G. (2007), "Slip Critical Bolted Connections A Reliability Analysis for the Design at the Ultimate Limit State," Preliminary Report prepared for AISC, University of Alberta, Edmonton, Alberta, CA.

Hajjar, J.F. (2000), "Concrete-Filled Steel Tube Columns under Earthquake Loads," *Progress in Structural Engineering and Materials*, Vol. 2, No. 1, pp. 72–82.

Hajjar, J.F., Dexter, R.J., Ojard, S.D., Ye, Y. and Cotton, S.C. (2003), "Continuity Plate Detailing for Steel Moment-Resisting Connections," *Engineering Journal*, AISC, No. 4, 4th Quarter, pp. 81–97.

Hansen, R.J., Reed, J.W., and Vanmarcke, E.H. (1973), "Human Response to Wind-Induced Motion of Buildings," *Journal of the Structural Division*, ASCE, Vol. 99, No. ST7, pp. 1,589-1,606.

Hardash, S.G. and Bjorhovde, R. (1985), "New Design Criteria for Gusset Plates in Tension", *Engineering Journal*, AISC, Vol. 22, No. 2, 2nd Quarter, pp. 77–94.

Heinzerling, J.E. (1987), "Structural Design of Steel Joist Roofs to Resist Ponding Loads," Technical Digest No. 3, Steel Joist Institute, Myrtle Beach, SC.

Helwig, T.A., Frank, K.H. and Yura, J.A. (1997), "Lateral-Torsional Buckling of Singly-Symmetric I-Beams," *Journal of Structural Engineering*, ASCE, Vol. 123, No. 9, September, pp. 1,172–1,179.

Higgins, T.R. and Preece, F.R. (1968), "AWS-AISC Fillet Weld Study, Longitudinal and Transverse Shear Tests," Internal Report, Testing Engineers, Inc., Oakland, CA, May 31.

Horne, M.R. and Morris, L.J. (1982), *Plastic Design of Low-Rise Frames*, MIT Press, Cambridge, MA.

Horne, M.R. and Grayson, W.R. (1983), "Parametric Finite Element Study of Transverse Stiffeners for Webs in Shear," Instability and Plastic Collapse of Steel Structures, Proceedings of the Michael R. Horne Conference, L.J. Morris (ed.), Granada Publishing, London, pp. 329–341.

Hsieh, S.H. and Deierlein, G.G. (1991), "Nonlinear Analysis of Three-Dimensional Steel Frames with Semi-Rigid Connections," *Computers and Structures*, Vol. 41, No. 5, pp. 995–1,009.

ICBO (1997), *Uniform Building Code*, International Conference of Building Officials, Whittier, CA.

ICC (2009), *International Building Code*, International Code Council, Falls Church, VA.

IIW (1989), "Design Recommendations for Hollow Section Joints—Predominantly Statically Loaded," 2nd Ed., IIW Document XV-701-89, IIW Annual Assembly, Subcommission XV-E, International Institute of Welding, Helsinki, Finland.

Irwin, A.W. (1986), "Motion in Tall Buildings," *Second Century of the Skyscraper*, L.S. Beedle (ed.), Van Nostrand Reinhold Co., New York, NY.

Islam, M.S., Ellingwood, B. and Corotis, R.B. (1990), "Dynamic Response of Tall Buildings to Stochastic Wind Load," *Journal of Structural Engineering*, ASCE, Vol. 116, No. 11, November, pp. 2,982–3,002.

ISO (1977), "Bases for the Design of Structures—Deformations of Buildings at the Serviceability Limit States," ISO 4356, International Standards Organization, Geneva, Switzerland.

Iwankiw, N. (1984), "Note on Beam-Column Moment Amplification Factor," *Engineering Journal*, AISC, Vol. 21, No. 1, 1st Quarter, pp. 21-23.

Jacobs, W.J. and Goverdhan, A.V. (2010), "Review and Comparison of Encased Composite Steel-Concrete Column Detailing Requirements," *Composite Construction in Steel and Concrete VI*, R. Leon et al. (eds.), ASCE, Reston, VA.

Jayas, B.S. and Hosain, M.U. (1988a), "Composite Beams with Perpendicular Ribbed Metal Deck," *Composite Construction in Steel and Concrete II*, C.D. Buckner and I.M. Viest, (eds.), American Society of Civil Engineers, New York, NY, pp. 511–526.

Jayas, B.S. and Hosain, M.U. (1988b), "Behaviour of Headed Studs in Composite Beams: Push-Out Tests," *Canadian Journal of Civil Engineering*, Vol. 15, pp. 240–253.

JCRC (1971), *Handbook of Structural Stability*, Japanese Column Research Council, English translation, pp. 3–22.

Johnson, D.L. (1985), "An Investigation into the Interaction of Flanges and Webs in Wide-Flange Shapes," *Proceedings of the Annual Technical Session and Meeting*, Cleveland, OH, April 16-17, 1985, Structural Stability Research Council, Bethlehem, PA, pp. 397–405.

Johnson, D.L. (1996), "Final Report on Tee Stub Tests," Butler Corporation Research Report, Grandview, MO, May.

Johnson, R.P. and Yuan, H. (1998), "Existing Rules and New Tests for Stud Shear Connectors in Troughs of Profiled Sheeting," *Proceedings of the Institution of Civil Engineers: Structures and Buildings*, Vol. 128, No. 3, pp. 244–251.

Johnston, B.G. (1939), "Pin-Connected Plate Links," *Transactions of the ASCE*, Vol. 104, pp. 314–339.

Johnston, B.G. and Green, L.F. (1940), "Flexible Welded Angle Connections," *The Welding Journal*, AWS, October.

Johnston, B.G. and Deits, G.R. (1942), "Tests of Miscellaneous Welded Building Connections," *The Welding Journal*, AWS, November, p. 5.

Johnston, B.G. (ed.) (1976), *Guide to Stability Design for Metal Structures*, 3rd Ed., Structural Stability Research Council, John Wiley & Sons, Inc., New York, NY.

Kaczinski, M.R., Schneider, C.R., Dexter, R.J. and Lu, L.-W. (1994), "Local Web Crippling of Unstiffened Multi-Cell Box Sections," *Proceedings of the ASCE Structures Congress '94*, Atlanta, GA, Vol. 1, American Society of Civil Engineers, New York, NY, pp. 343–348.

Kaehler, R.C., White, D.W. and Kim, Y.D. (2010), *Frame Design Using Web-Tapered Members*, Design Guide 25, Metal Building Manufacturers Association and AISC, Chicago, IL.

Kanchanalai, T. (1977), *The Design and Behavior of Beam-Columns in Unbraced Steel Frames*, AISI Project No. 189, Report No. 2, Civil Engineering/Structures Research Lab., University of Texas, Austin, TX.

Kanchanalai, T. and Lu, L.-W. (1979), "Analysis and Design of Framed Columns under Minor Axis Bending," *Engineering Journal*, AISC, Vol. 16, No. 2, 2nd Quarter, pp. 29–41.

Kato, B. (1990), "Deformation Capacity of Steel Structures," *Journal of Constructional Steel Research*, Vol. 17, No. 1–2, pp. 33–94.

Kaufmann, E.J., Metrovich, B., Pense, A.W. and Fisher, J.W. (2001), "Effect of Manufacturing Process on k-Area Properties and Service Performance," *Proceedings of the North American Steel Construction Conference*, Fort Lauderdale, FL, May 9-12, 2001, American Institute of Steel Construction, Chicago, IL, pp. 17.1–17.24.

Kavanagh, T.C. (1962), "Effective Length of Framed Columns," *Transactions of the American Society of Civil Engineers*, Vol. 127, pp. 81–101.

Keating, P.B. and Fisher, J.W. (1986), "Evaluation of Fatigue Tests and Design Criteria on Welded Details," NCHRP Report No. 286, Transportation Research Board, Washington DC, September.

Kemp, A.R. (1996), "Inelastic Local and Lateral Buckling in Design Codes," *Journal of Structural Engineering*, ASCE, Vol. 122, No. 4, pp. 374–382.

Kim, H.J. and Yura, J.A. (1996), "The Effect of End Distance on the Bearing Strength of Bolted Connections," PMFSEL Report No. 96-1, University of Texas, Austin, TX.

Kim, Y.D., Jung, S.-K. and White, D.W. (2007), "Transverse Stiffener Requirements in Straight and Horizontally Curved Steel I-Girders," *Journal of Bridge Engineering*, ASCE, Vol. 12, No. 2, pp. 174–183.

Kirby, B.R. and Preston, R.R. (1988), "High Temperature Properties of Hot-Rolled Structural Steels for Use in Fire Engineering Design Studies," *Fire Safety Journal*, Vol. 13, pp. 27–37.

Kirby, P.A. and Nethercot, D.A. (1979), *Design for Structural Stability*, John Wiley & Sons, Inc., New York, NY.

Kishi, N. and Chen, W.F. (1986), "Data Base of Steel Beam-to-Column Connections," Vol. 1 and 2, Structural Engineering Report No. CE-STR-86-26, School of Civil Engineering, Purdue University, West Lafayette, IN.

Kitipornchai, S. and Trahair, N.S. (1980), "Buckling Properties of Monosymmetric I-Beams," *Journal of the Structural Division*, ASCE, Vol. 106, No. ST5, May, pp. 941–957.

Kitipornchai, S. and Traves, W.H. (1989), "Welded-Tee End Connections for Circular Hollow Tubes," *Journal of Structural Engineering*, ASCE, Vol. 115, No.12, pp. 3,155–3,170.

Klöppel, K. and Seeger, T. (1964), "Dauerversuche Mit Einschnittigen HV-Verbindurgen Aus ST37," *Der Stahlbau*, Vol. 33, No. 8, August, pp. 225–245 and Vol. 33, No. 11, November, pp. 335–346.

Kosteski, N. and Packer, J.A. (2003), "Longitudinal Plate and Through Plate-to-HSS Welded Connections," *Journal of Structural Engineering*, ASCE, Vol. 129, No. 4, pp. 478–486.

Kuchenbecker, G.H., White, D.W. and Surovek-Maleck, A.E. (2004), "Simplified Design of Building Frames Using First-Order Analysis and K =1," *Proceedings of the Annual Technical Session and Meeting*, Long Beach, CA, March 24-27, 2004, Structural Stability Research Council, Rolla, MO, pp. 119–138.

Kulak, G.L., Fisher, J.W. and Struik, J.H.A. (1987), *Guide to Design Criteria for Bolted and Riveted Joints*, 2nd Ed., John Wiley & Sons, Inc., New York, NY.

Kulak, G.L. and Grondin, G.Y. (2001), "AISC LRFD Rules for Block Shear—A Review," *Engineering Journal*, AISC, Vol. 38, No. 4, 4th Quarter, pp. 199–203.

Kulak, G.L. and Grondin, G.Y. (2002), "Closure: AISC LRFD Rules for Block Shear—A Review," *Engineering Journal*, AISC, Vol. 39, No. 4, 4th Quarter, p. 241.

Kulak, G.L. and Grondin, G.Y. (2003), "Strength of Joints that Combine Bolts and Welds," *Engineering Journal*, AISC, Vol. 40, No. 2, 2nd Quarter, pp. 89–98.

Kulak, G.L. (2002), *High Strength Bolts: A Primer for Structural Engineers*, Design Guide 17, AISC, Chicago, IL.

Kurobane, Y., Packer, J.A., Wardenier, J. and Yeomans, N.F. (2004), "Design Guide for Structural Hollow Section Column Connections," CIDECT Design Guide No. 9, CIDECT (ed.) and Verlag TÜV Rheinland, Köln, Germany.

Lawson, R.M. (1992), "Shear Connection in Composite Beams," *Composite Construction in Steel and Concrete II*, W.S. Easterling and W.M.K. Roddis, (eds.), American Society of Civil Engineers, New York, NY.

Lee, D., Cotton, S., Dexter, R.J., Hajjar, J.F., Ye, Y. and Ojard, S.D. (2002a), "Column Stiffener Detailing and Panel Zone Behavior of Steel Moment Frame Connections," Report No. ST-01-3.2, Department of Civil Engineering, University of Minnesota, Minneapolis, MN.

Lee, S.C., Yoo, C.H. and Yoon, D.Y. (2002b), "Behavior of Intermediate Transverse Stiffeners Attached on Web Panels," *Journal of Structural Engineering*, ASCE, Vol. 128, No. 3, pp. 337–345.

Leigh, J.M. and Lay, M.G. (1978), "Laterally Unsupported Angles with Equal and Unequal Legs," Report MRL 22/2, July, Melbourne Research Laboratories, Clayton, Victoria, Australia.

Leigh, J.M. and Lay, M.G. (1984), "The Design of Laterally Unsupported Angles," *Steel Design Current Practice*, Section 2, Bending Members, American Institute of Steel Construction, Chicago, IL, January.

LeMessurier, W.J. (1976), "A Practical Method of Second Order Analysis, Part 1—Pin-Jointed Frames," *Engineering Journal*, AISC, Vol. 13, No. 4, 4th Quarter, pp. 89–96.

LeMessurier, W.J. (1977), "A Practical Method of Second Order Analysis, Part 2—Rigid Frames," *Engineering Journal*, AISC, Vol. 14, No. 2, 2nd Quarter, pp. 49–67.

LeMessurier, W.J. (1995), "Simplified K Factors for Stiffness Controlled Designs," *Restructuring: America and Beyond, Proceedings of ASCE Structures Congress XIII*, Boston, MA, April 2-5, 1995, American Society of Civil Engineers, New York, NY, pp. 1,797–1,812.

Leon, R.T. (1990), "Serviceability of Composite Floor," *Proceedings of the 1990 National Steel Construction Conference*, AISC, pp. 18:1–18:23.

Leon, R.T. and Alsamsam, I. (1993), Performance and Serviceability of Composite Floors, Structural Engineering in Natural Hazards Mitigation, *Proceedings of the ASCE Structures Congress*, ASCE, pp. 1,479–1,484.

Leon, R.T. (1994), "Composite Semi-Rigid Construction," *Engineering Journal*, AISC, Vol. 31. No. 2, 2nd Quarter, pp. 57–67.

Leon, R.T., Hoffman, J. and Staeger, T. (1996), *Design of Partially-Restrained Composite Connections*, Design Guide 8, AISC, Chicago, IL.

Leon, R.T. and Easterling, W.S. (eds.) (2002), *Connections in Steel Structures IV Behavior, Strength and Design*, American Institute of Steel Construction, Chicago, IL.

Leon, R.T., Kim, D.K. and Hajjar, J.F. (2007), "Limit State Response of Composite Columns and Beam-Columns Part 1: Formulation of Design Provisions for the 2005 AISC Specification," *Engineering Journal*, AISC, Vol. 44, No. 4, 4th Quarter, pp. 341–358.

Leon, R.T. and Hajjar, J.F. (2008), "Limit State Response of Composite Columns and Beam-Columns Part 2: Application of Design Provisions for the 2005 AISC Specification," *Engineering Journal*, AISC, Vol. 45, No. 1, 1st Quarter, pp. 21–46.

Lesik, D.F. and Kennedy, D.J.L. (1990), "Ultimate Strength of Fillet Welded Connections Loaded in Plane," *Canadian Journal of Civil Engineering*, Vol. 17, No. 1, pp. 55–67.

Lewis, B.E. and Zwerneman, F.J. (1996), "Edge Distance, Spacing, and Bearing in Bolted Connections," Research Report, Department of Civil and Environmental Engineering, Oklahoma State University, Stillwater, OK, July.

Liew, J.Y., White, D.W. and Chen, W.F. (1993), "Second-Order Refined Plastic-Hinge Analysis for Frame Design, Parts I and II," *Journal of Structural Engineering*, ASCE, Vol. 119, No. 11, pp. 3,196–3,237.

Lorenz, R.F., Kato, B. and Chen, W.F. (eds.) (1993), *Semi-Rigid Connections in Steel Frames*, Council for Tall Buildings and Urban Habitat, Bethlehem, PA.

Lu, Y.O. and Kennedy, D.J.L. (1994), "The Flexural Behaviour of Concrete-Filled Hollow Structural Sections," *Canadian Journal of Civil Engineering*, Vol. 21, No. 1, pp. 111–130.

Lui, Z. and Goel, S.C. (1987), "Investigation of Concrete-Filled Steel Tubes Under Cyclic Bending and Buckling," UMCE Report 87-3, Department of Civil and Environmental Engineering, University of Michigan, Ann Arbor, MI.

Lutz, L.A. and Fisher, J.M. (1985), "A Unified Approach for Stability Bracing Requirements, *Engineering Journal*, AISC, Vol. 22, No. 4, 4th Quarter, pp. 163–167.

Lutz, L.A. (1992), "Critical Slenderness of Compression Members with Effective Lengths about Non-Principal Axes," *Proceedings of the Annual Technical Session and Meeting*, April 6-7, 1992, Pittsburgh, PA, Structural Stability Research Council, Bethlehem, PA.

Lyse, I. and Schreiner, N.G. (1935), "An Investigation of Welded Seat Angle Connections," *The Welding Journal*, AWS, February, p. 1.

Lyse, I. and Gibson, G.J. (1937), "Effect of Welded Top Angles on Beam-Column Connections," *The Welding Journal*, AWS, October.

Madugula, M.K.S. and Kennedy, J.B. (1985), *Single and Compound Angle Members*, Elsevier Applied Science, New York, NY.

Marino, F.J. (1966), "Ponding of Two-Way Roof Systems," *Engineering Journal*, AISC, Vol. 3, No. 3, 3rd Quarter, pp. 93–100.

Marshall, P.W. (1992), *Design of Welded Tubular Connections: Basis and Use of AWS Code Provisions*, Elsevier, Amsterdam, the Netherlands.

Martinez-Garcia, J.M. and Ziemian, R.D. (2006), "Benchmark Studies to Compare Frame Stability Provisions," *Proceedings—Annual Technical Session and Meeting*, Structural Stability Research Council, San Antonio, TX, pp. 425–442.

McGuire, W. (1992), "Computer-Aided Analysis," *Constructional Steel Design: An International Guide*, P.J. Dowling, J.E. Harding and R. Bjorhovde (eds.), Elsevier Applied Science, New York, NY, pp. 915–932.

McGuire, W., Gallagher, R.H. and Ziemian, R.D. (2000), *Matrix Structural Analysis*, 2nd Ed., John Wiley & Sons, Inc., New York, NY.

Mottram, J.T. and Johnson, R.P. (1990), "Push Tests on Studs Welded Through Profiled Steel Sheeting," *The Structural Engineer*, Vol. 68, No. 10, pp. 187–193.

Munse, W.H. and Chesson, Jr., E., (1963), "Riveted and Bolted Joints: Net Section Design," *Journal of the Structural Division*, ASCE, Vol. 89, No. ST1, February, pp. 49–106.

Murray, T.M., Kline, D.P. and Rojani, K.B. (1992), "Use of Snug-Tightened Bolts in End-Plate Connections," *Connections in Steel Structures II*, R. Bjorhovde, A. Colson, G. Haaijer and J.W.B. Stark, (eds.), AISC, Chicago, IL.

Murray, T.M., Allen, D.E. and Ungar, E.E. (1997), *Floor Vibrations Due to Human Activity*, Design Guide 11, AISC, Chicago, IL.

Murray, T.M. and Sumner, E.A. (2004), *End-Plate Moment Connections—Wind and Seismic Applications*, Design Guide 4, 2nd Ed., AISC, Chicago, IL.

Nethercot, D.A. (1985), "Steel Beam to Column Connections—A Review of Test Data and Their Applicability to the Evaluation of the Joint Behaviour of the Performance of Steel Frames," CIRIA, London, England.

NFPA (2002a), *Standard for the Inspection, Testing, and Maintenance of Water-Based Fire Protection Systems*, NFPA 25, National Fire Protection Association, Quincy, MA.

NFPA (2002b), *Standard on Smoke and Heat Venting*, NFPA 204, National Fire Protection Association, Quincy, MA.

Nowak, A.S. and Collins, K. R. (2000), *Reliability of Structures*, McGraw-Hill, New York, NY.

NRC (1974), "Expansion Joints in Buildings," Technical Report No. 65, Standing Committee on Structural Engineering of the Federal Construction Council, Building Research Advisory Board, Division of Engineering, National Research Council, National Academy of Sciences, Washington, DC.

NRCC (1990), *National Building Code of Canada*, National Research Council of Canada, Ottawa, Ontario, Canada.

Oehlers, D.J. and Bradford, M.A. (1995), *Composite Steel and Concrete Members*, Elsevier Science, Inc., Tarrytown, NY.

Ollgaard, J.G., Slutter, R.G. and Fisher, J.W. (1971), "Shear Strength of Stud Shear Connections in Lightweight and Normal Weight Concrete," *Engineering Journal*, AISC, Vol. 8, No. 2, 2nd Quarter, pp. 55–64.

OSHA (2001), *Safety and Health Regulations for Construction*, Standards—29 CFR 1926 Subpart R—Steel Erection, Occupational Safety and Health Administration, Washington, DC.

Packer, J.A., Birkemoe, P.C., and Tucker, W.J. (1984), "Canadian Implementation of CIDECT Monograph No. 6," CIDECT Report No. 5AJ-84/9-E, University of Toronto, Toronto, Canada.

Packer, J.A. and Cassidy, C.E. (1995), "Effective Weld Length for HSS T, Y and X Connections," *Journal of Structural Engineering*, ASCE, Vol. 121, No. 10, pp. 1,402–1,408.

Packer, J.A. and Henderson, J.E. (1997), *Hollow Structural Section Connections and Trusses—A Design Guide*, 2nd Ed., Canadian Institute of Steel Construction, Toronto, Canada.

Packer, J.A. (2004), "Reliability of Welded Tubular K-Connection Resistance Expressions," International Institute of Welding (IIW) Document XV-E-04-291, University of Toronto, Toronto, Canada.

Packer, J.A. and Wardenier, J. (2010), "Design Guide for Rectangular Hollow Section (RHS) Joints under Predominantly Static Loading," Design Guide No. 3, CIDECT, 2nd Ed., LSS Verlag, Köln, Germany.

Pallarés, L. and Hajjar, J.F. (2010a), "Headed Steel Stud Anchors in Composite Structures: Part II. Tension and Interaction," *Journal of Constructional Steel Research*, Vol. 66, No. 2, February, pp. 213–228.

Pallarés, L. and Hajjar, J.F. (2010b), "Headed Steel Stud Anchors in Composite Structures: Part I. Shear," *Journal of Constructional Steel Research*, Vol. 66, No. 2, February, pp. 198–212.

Pate-Cornell, E. (1994), "Quantitative Safety Goals for Risk Management of Industrial Facilities," *Structural Safety*, Vol. 13, No. 3, pp. 145–157.

Popov, E.P. and Stephen, R.M. (1977), "Capacity of Columns with Splice Imperfections," *Engineering Journal*, AISC, Vol. 14, No. 1, 1st Quarter, pp. 16–23.

Popov, E.P. (1980), "An Update on Eccentric Seismic Bracing," *Engineering Journal*, AISC, Vol. 17, No. 3, 3rd Quarter, pp. 70–71.

Preece, F.R. (1968), "AWS-AISC Fillet Weld Study—Longitudinal and Transverse Shear Tests," Testing Engineers, Inc., Los Angeles, CA, May.

Prion, H.G.L. and Boehme, J. (1994), "Beam-column behaviour of steel tubes filled with high strength concrete," *Canadian Journal of Civil Engineering*, Vol. 21, No. 2, pp. 207–218.

Prochnow, S.D., Ye, Y., Dexter, R.J., Hajjar, J.F. and Cotton, S.C. (2000), "Local Flange Bending and Local Web Yielding Limit States in Steel Moment Resisting Connections," *Connections in Steel Structures IV Behavior, Strength and Design*, R.T. Leon and W.S. Easterling (eds.), AISC, Chicago, IL, pp. 318–328.

Rahal, K.N. and Harding, J.E. (1990a), "Transversely Stiffened Girder Webs Subjected to Shear Loading—Part 1: Behaviour," *Proceedings of the Institution of Civil Engineers*, Part 2, 1989, March, pp. 47–65.

Rahal, K.N. and Harding, J.E. (1990b), "Transversely Stiffened Girder Webs Subjected to Shear Loading—Part 2: Stiffener Design," *Proceedings of the Institution of Civil Engineers*, Part 2, 1989, March, pp. 67–87.

Rahal, K.N. and Harding, J.E. (1991), "Transversely Stiffened Girder Webs Subjected to Combined In-Plane Loading," *Proceedings of the Institution of Civil Engineers*, Part 2, 1991, June, pp. 237–258.

Ravindra, M.K. and Galambos, T.V. (1978), "Load and Resistance Factor Design for Steel," *Journal of the Structural Division*, ASCE, Vol. 104, No. ST9, September, pp. 1,337–1,353.

RCSC (2009), *Specification for Structural Joints Using High Strength Bolts*, Research Council on Structural Connections, American Institute of Steel Construction, Chicago, IL.

Ricker, D.T. (1989), "Cambering Steel Beams," *Engineering Journal*, AISC, Vol. 26, No. 4, 4th Quarter, pp. 136–142.

Ricles, J.M. and Yura, J.A. (1983), "Strength of Double-Row Bolted Web Connections," *Journal of the Structural Division*, ASCE, Vol. 109, No. ST 1, January, pp. 126–142.

Roberts, T.M. (1981), "Slender Plate Girders Subjected to Edge Loading," *Proceedings of the Institution of Civil Engineers*, Part 2, No. 71, September.

Robinson, H. (1967), "Tests of Composite Beams with Cellular Deck," *Journal of the Structural Division*, ASCE, Vol. 93, No. ST4, pp. 139–163.

Roddenberry, M.R., Easterling, W.S. and Murray, T.M. (2002a) "Behavior and Strength of Welded Stud Shear Connectors," Report No. CE/VPI–02/04, Virginia Polytechnic Institute and State University, Blacksburg, VA.

Roddenberry, M.R., Lyons, J.C., Easterling, W.S. and Murray, T.M. (2002b), "Performance and Strength of Welded Shear Studs," *Composite Construction in Steel and Concrete IV*, J.F. Hajjar, M. Hosain, W.S. Easterling and B.M. Shahrooz (eds.), American Society of Civil Engineers, Reston, VA, pp. 458–469.

Roeder, C.W., Cameron, B. and Brown, C.B. (1999), "Composite Action in Concrete Filled Tubes," *Journal of Structural Engineering*, ASCE, Vol. 125, No. 5, May, pp. 477–484.

Roik, K. and Bergmann, R. (1992), "Composite Column," *Constructional Steel Design: An International Guide*, P.J. Dowling, J.E. Harding and R. Bjorhovde, (eds.), Elsevier Applied Science, London, United Kingdom.

Rolloos, A. (1969), "The Effective Weld Length of Beam to Column Connections without Stiffening Plates," Stevin Report 6-69-7-HL, Delft University of Technology, Delft, the Netherlands.

Ruddy, J. (1986), "Ponding of Concrete Deck Floors," *Engineering Journal*, AISC, Vol. 23, No. 3, 3rd Quarter, pp. 107–115.

Ruddy, J.L., Marlo, J.P., Ioannides, S.A. and Alfawakhiri, F. (2003), *Fire Resistance of Structural Steel Framing*, Design Guide 19, AISC, Chicago, IL.

Salmon, C.G. and Johnson, J.E. (1996), *Steel Structures, Design and Behavior*, 4th Ed., HarperCollins College Publishers, New York, NY.

Salmon, C.G., Johnson, J.E. and Malhas, F.A. (2008), *Steel Structures: Design and Behavior*, Prentice-Hall, Upper Saddle River, NJ.

Salvadori, M. (1956), "Lateral Buckling of Eccentrically Loaded I-Columns," *Transactions of the ASCE*, Vol. 122, No. 1.

Sato, A. and Uang, C.-M. (2007), "Modified Slenderness Ratio for Built-up Members," *Engineering Journal*, AISC, pp. 269–280.

Schilling, C.G. (1965), Buckling Strength of Circular Tubes, *Journal of the Structural Division*, ASCE, Vol. 91, No. ST5, pp. 325–348.

Schuster, J.W. (1997), *Structural Steel Fabrication Practices*, McGraw-Hill, New York, NY.

SDI (2001), *Standard Practice Details*, Steel Deck Institute, Fox River Grove, IL.

SDI (2004), *Diaphragm Design Manual*, Steel Deck Institute, Fox River Grove, IL.

Seaburg, P.A. and Carter, C.J. (1997), *Torsional Analysis of Structural Steel Members*, Design Guide 9, AISC, Chicago, IL.

SFPE (2002), *Handbook of Fire Protection Engineering*, 3rd Ed., P.J. DiNenno (ed.), National Fire Protection Association, Quincy, MA.

SFSA (1995), *Steel Castings Handbook*, Steel Founders Society of America, Crystal Lake, IL.

Shanmugam, N.E. and Lakshmi, B. (2001), "State of the Art Report on Steel-Concrete Composite Columns," *Journal of Constructional Steel Research*, Vol. 57, No. 10, October, pp. 1,041–1,080.

Sherbourne, A.N. and Jensen, C.D. (1957), "Direct Welded Beam Column Connections," Report. No. 233.12, Fritz Engineering Laboratory, Lehigh University, Bethlehem, PA.

Sherman, D.R. (1976), "Tentative Criteria for Structural Applications of Steel Tubing and Pipe," American Iron and Steel Institute, Washington, DC, August.

Sherman, D.R. and Tanavde, A.S. (1984), "Comparative Study of Flexural Capacity of Pipes," Internal Report, Department of Civil Engineering, University of Wisconsin-Milwaukee, WI, March.

Sherman, D.R. and Ales, J.M. (1991), "The Design of Shear Tabs with Tubular Columns," *Proceedings of the National Steel Construction Conference*, Washington, DC, American Institute of Steel Construction, Chicago, IL, pp. 1.2–1.22.

Sherman, D.R. (1992), "Tubular Members," *Constructional Steel Design—An International Guide*, P.J. Dowling, J.H. Harding and R. Bjorhovde (eds.), Elsevier Applied Science, London, England, pp. 91–104.

Sherman, D.R. (1995a), "Stability Related Deterioration of Structures," *Proceedings of the Annual Technical Session and Meeting*, Kansas City, MO, March 27-28, 1995, Structural Stability Research Council, Bethlehem, PA.

Sherman, D.R. (1995b), "Simple Framing Connections to HSS Columns," *Proceedings of the National Steel Construction Conference*, San Antonio, Texas, American Institute of Steel Construction, Chicago, IL, pp. 30.1–30.16.

Sherman, D.R. (1996), "Designing with Structural Tubing," *Engineering Journal*, AISC, Vol. 33, No. 3, 3rd Quarter, pp. 101–109.

Slutter, R.G. and Driscoll, G.C. (1965), "Flexural Strength of Steel-Concrete Composite Beams," *Journal of the Structural Division*, ASCE, Vol. 91, No. ST2, April, pp. 71–99.

Sourochnikoff, B. (1950), "Wind Stresses in Semi-Rigid Connections of Steel Framework," *Transactions of the ASCE*, Vol. 115, pp. 382–402.

Stang, A.H. and Jaffe, B.S. (1948), *Perforated Cover Plates for Steel Columns*, Research Paper RP1861, National Bureau of Standards, Washington, DC.

Stanway, G.S., Chapman, J.C. and Dowling, P.J. (1993), "Behaviour of a Web Plate in Shear with an Intermediate Stiffener," *Proceedings of the Institution of Civil Engineers, Structures and Buildings*, Vol. 99, August, pp. 327–344.

Stanway, G.S., Chapman, J.C. and Dowling, P.J. (1996), "A Design Model for Intermediate Web Stiffeners," *Proceedings of the Institution of Civil Engineers, Structures and Buildings*, Vol. 116, February, pp. 54–68.

Summers, P.A. and Yura, J.A. (1982), "The Behavior of Beams Subjected to Concentrated Loads," Report No. 82-5, Phil M. Ferguson Structural Engineering Laboratory, University of Texas, Austin, TX, August.

Surovek-Maleck, A.E. and White, D.W. (2003). "Direct Analysis Approach for the Assessment of Frame Stability: Verification Studies," *Proceedings—Annual Technical Session and Meeting,* Structural Stability Research Council, Baltimore, MD, pp. 423–441.

Surovek-Maleck, A., White, D.W. and Leon, R.T. (2004), "Direct Analysis and Design of Partially-Restrained Steel Framing Systems," *Journal of Structural Engineering*, ASCE, Vol. 131, No. 9, pp. 1376–1389.

Takagi, J. and Deierlein, G.G. (2007), "Strength Design Criteria for Steel Members at Elevated Temperatures," *Journal of Constructional Steel Research*, Vol. 63, pp. 1036–1050.

Taylor, A.C. and Ojalvo, M. (1966), "Torsional Restraint of Lateral Buckling," *Journal of the Structural Division*, ASCE, Vol. 92, No. ST2, pp. 115–129.

Thoft-Christensen, P. and Murotsu, Y. (1986) *Application of Structural System Reliability Theory*, Springer Verlag, Berlin.

Tide, R.H.R. (1985), "Reasonable Column Design Equations," *Proceedings of the Annual Technical Session and Meeting*, Cleveland, OH, April 16-17, 1985, Structural Stability Research Council, Bethlehem, PA.

Tide, R.H.R. (1999), "Evaluation of Steel Properties and Cracking in the 'k'-area of W Shapes," *Engineering Structures*, Vol. 22, pp. 128-124.

Tide, R.H.R. (2001), "A Technical Note: Derivation of the LRFD Column Design Equations," *Engineering Journal*, AISC, Vol. 38, No. 3, 3rd Quarter, pp. 137–139.

Tide, R.H.R. (2010), "Bolt Shear Design Considerations," *Engineering Journal*, AISC, Vol. 47, No. 1, 1st Quarter, pp. 47–64.

Timoshenko, S.P. (1956), *Strength of Materials*, Vol. II, 3rd Ed., D. Van Nostrand, New York, NY.

Timoshenko, S.P. and Gere, J.M. (1961), *Theory of Elastic Stability*, McGraw-Hill Book Company, New York, NY.

Troup, E.W. (1999), "Effective Contract and Shop Drawings for Structural Steel," *Proceedings of the AISC National Steel Construction Conference*, Toronto, Ontario, May 19-21, 1999, American Institute of Steel Construction, Chicago, IL pp. 37-1–37-15.

Van der Sanden, P.G.F.J. (1995), "The Behaviour of a Headed Stud Connection in a 'New' Push Test including a Ribbed Slab. Tests: Main Report," BKO Report No. 95-16, Eindhoven University of Technology, Eindhoven, the Netherlands, March.

Varma, A.H., Ricles, J.M., Sause, R. and Lu, L.-W. (2002), "Experimental Behavior of High Strength Square Concrete Filled Steel Tube (CFT) Columns," *Journal of Structural Engineering*, ASCE, Vol. 128, No. 3, pp. 309–318.

Varma, A.H. and Zhang, K. (2009), "Slenderness Limits for Noncompact/Slender Filled Members," Bowen Laboratory Report No. 2009-01, School of Civil Engineering, Purdue University, West Lafayette, IN, August.

Vickery, B.J., Isyumov, N. and Davenport, A.G. (1983), "The Role of Damping, Mass and Stiffness in the Reduction of Wind Effects on Structures," *Journal of Wind Engineering and Industrial Aerodynamics*, Vol. 11, Nos. 1-3, pp. 285–294.

Viest, I.M., Siess, C.P., Appleton, J.H. and Newmark, N. (1952), "Full-Scale Tests of Channel Shear Connectors and Composite T-Beams," Bulletin Series No. 405, Vol. 50, No. 29, University of Illinois Engineering Experiment Station, University of Illinois, Urbana, IL.

Viest, I.M., Colaco, J.P., Furlong, R.W., Griffis, L.G., Leon, R.T. and Wyllie, L.A., Jr. (1997), *Composite Construction: Design for Buildings*, McGraw-Hill, New York, NY.

von Kármán, T., Sechler, E.E. and Donnell, L.H. (1932), "The Strength of Thin Plates in Compression," *Transactions of the ASME*, Vol. 54.

Wardenier, J., Davies, G. and Stolle, P. (1981), "The Effective Width of Branch Plate to RHS Chord Connections in Cross Joints," Stevin Report 6-81-6, Delft University of Technology, Delft, the Netherlands.

Wardenier, J., Kurobane, Y., Packer, J.A., Dutta, D. and Yeomans, N. (1991), *Design Guide for Circular Hollow Section (CHS) Joints under Predominantly Static Loading*, CIDECT Design Guide No. 1, CIDECT (ed.) and Verlag TÜV Rheinland, Köln, Germany.

West, M.A., Fisher, J.M. and Griffis, L.G. (2003), *Serviceability Design Considerations for Steel Buildings*, Design Guide 3, 2nd Ed., AISC, Chicago, IL.

Wheeler, A. and Bridge, R. (2006), "The Behaviour of Circular Concrete-Filled Thin-Walled Steel Tubes in Flexure," *Proceedings of the 5th International Conference on Composite Construction in Steel and Concrete V*, R.T. Leon and J. Lange (eds.), ASCE, Reston, Virginia, pp. 413–423.

White, D.W. and Chen, W.F. (ed.) (1993), *Plastic Hinge Based Methods for Advanced Analysis and Design of Steel Frames: An Assessment of State-of-the-Art*, Structural Stability Research Council, Bethlehem, PA.

White, D.W. and Hajjar, J.F. (1997a), "Design of Steel Frames without Consideration of Effective Length," *Engineering Structures*, Vol. 19, No. 10, pp. 797–810.

White, D.W. and Hajjar, J.F. (1997b), "Buckling Models and Stability Design of Steel Frames: a Unified Approach," *Journal of Constructional Steel Research*, Vol. 42, No. 3, pp. 171–207.

White, D.W. (2003), "Improved Flexural Design Provisions for I-Shaped Members and Channels," Structural Engineering, Mechanics and Materials Report No. 23, School of Civil and Environmental Engineering, Georgia Institute of Technology, Atlanta, GA.

White, D.W. and Jung, S.K (2003), "Simplified Lateral-Torsional Buckling Equations for Singly-Symmetric I-Section Members," Structural Engineering, Mechanics and Materials Report No. 24b, School of Civil and Environmental Engineering, Georgia Institute of Technology, Atlanta, GA.

White, D.W. (2004), "Unified Flexural Resistance Equations for Stability Design of Steel I-Section Members Overview," Structural Engineering, Mechanics and Materials Report No. 24a, School of Civil and Environmental Engineering, Georgia Institute of Technology, Atlanta, GA.

White, D.W. and Barker, M. (2008), "Shear Resistance of Transversely-Stiffened Steel I-Girders," *Journal of Structural Engineering*, ASCE, Vol. 134, No. 9, pp. 1,425–1,436.

White, D.W. and Goverdhan, A.V. (2008), "Design of PR Frames Using the AISC Direct Analysis Method," in *Connections in Steel Structures VI*, R. Bjorhovde, F.S.K. Bijlaard and L.F. Geschwindner (eds.), AISC, Chicago, IL, pp. 255–264.

Wilkinson, T. and Hancock, G.J. (1998), "Tests to Examine Compact Web Slenderness of Cold-Formed RHS," *Journal of Structural Engineering*, ASCE, Vol. 124, No. 10, October, pp. 1,166–1,174.

Wilkinson, T. and Hancock, G.J. (2002), "Predicting the Rotation Capacity of Cold-Formed RHS Beams Using Finite Element Analysis," *Journal of Constructional Steel Research*, Vol. 58, No. 11, November, pp. 1,455–1,471.

Wilson, W.M. (1934), "The Bearing Value of Rollers," Bulletin No. 263, University of Illinois Engineering Experiment Station, Urbana, IL.

Winter, G. (1947), "Strength of Thin Steel Compression Flanges," *Transactions of the ASCE*, Vol. 112, p. 547.

Winter, G. (1958), "Lateral Bracing of Columns and Beams," *Journal of the Structural Division*, ASCE, Vol. 84, No. ST3, March, pp. 1,561-1–1,561-22.

Winter, G. (1960), "Lateral Bracing of Columns and Beams," *Transactions of the ASCE*, Vol. 125, Part 1, pp. 809–825.

Winter, G. (1968), *Commentary on the Specification for the Design of Cold-Formed Steel Members*, American Iron and Steel Institute, Washington, DC.

Winter, G. (1970), *Light Gage Cold-Formed Steel Design Manual: Commentary of the 1968 Edition*, American Iron and Steel Institute, Washington, DC.

Wong, M.B. (2009), *Plastic Analysis and Design of Steel Structures*, Butterworth-Heinemann, Burlington, MA.

Xie, M. and Chapman, J.C. (2003), "Design of Web Stiffeners: Axial Forces," *Journal of Constructional Steel Research*, Vol. 59, pp. 1,035–1,056.

Yuan, H. (1996), "The Resistances of Stud Shear Connectors with Profiled Sheeting," Ph.D. Dissertation, Department of Engineering, The University of Warwick, Coventry, England.

Yuan, Q., Swanson, J. and Rassati, G.A. (2004), "An Investigation of Hole Making Practices in the Fabrication of Structural Steel," Internal Report, Department of Civil and Environmental Engineering, University of Cincinnati, Cincinnati, OH.

Yura, J.A. (1971), "The Effective Length of Columns in Unbraced Frames," *Engineering Journal*, AISC, Vol. 8, No. 2, 2nd Quarter, pp. 37–42.

Yura, J.A., Galambos, T.V. and Ravindra, K. (1978), "The Bending Resistance of Steel Beams," *Journal of the Structural Division*, ASCE, Vol. 104, No. ST9, pp. 1,355–1,370.

Yura, J.A., Birkemoe, P.C. and Ricles, J.M. (1982), "Beam Web Shear Connections: An Experimental Study," *Journal of the Structural Division*, ASCE, Vol. 108, No. ST2, February, pp. 311–326.

Yura, J.A. (1995), "Bracing for Stability—State-of-the-Art," *Proceedings of the ASCE Structures Congress XIII*, Boston, MA, April 2-5, 1995, American Society of Civil Engineers, New York, NY, pp. 88–103.

Yura, J.A., Kanchanalai, T. and Chotichanathawenwong, S. (1996), "Verification of Steel Beam-Column Design Based on the AISC–LRFD Method," *Proceedings—5th International Colloquium on the Stability of Metal Structures*, SSRC, Bethelem, PA, pp. 21–30.

Yura, J.A. (2001), "Fundamentals of Beam Bracing," *Engineering Journal*, AISC, Vol. 38, No.1, 1st Quarter, pp. 11–26.

Yura, J.A. and Helwig, T.A. (2009), "Bracing for Stability," Short Course Notes, Structural Stability Research Council, North American Steel Construction Conference, Phoenix, AZ, April.

Zahn, C.J. and Haaijer, G. (1987), "Effect of Connector Spacing on Double Angle Compressive Strength," Materials and Member Behavior, *Proceedings*, Structures Congress 1987, ASCE, Orlando, FL, pp. 199–212.

Zandonini, R. (1985), "Stability of Compact Built-Up Struts: Experimental Investigation and Numerical Simulation," *Costruzioni Metalliche*, No. 4.

Ziemian, R.D, McGuire, W. and Deierlein, G. (1992), "Inelastic Limit States Design, Part I: Planar Frame Studies, and Part II: Three-Dimensional Frame Study," *Journal of Structural Engineering*, ASCE, Vol. 118, No. 9, pp. 2532–2567.

Ziemian, R.D. and Miller, A.R. (1997), "Inelastic Analysis and Design: Frames With Members in Minor-Axis Bending," *Journal of Structural Engineering*, ASCE, Vol. 123, No. 2, pp. 151–157.

Ziemian, R.D. and McGuire, W. (2002), "Modified Tangent Modulus Approach, a Contribution to Plastic Hinge Analysis," *Journal of Structural Engineering*, ASCE, Vol. 128, No. 10, October, pp. 1301–1307.

Ziemian, R.D., McGuire, W. and Seo, D.W. (2008), "On the Inelastic Strength of Beam-Columns under Biaxial Bending," *Proceedings—Annual Stability Conference,* Structural Stability Research Council, Nashville, TN.

Ziemian, R.D. (ed.) (2010), *Guide to Stability Design Criteria for Metal Structures*, 6th Ed., John Wiley & Sons, Inc., Hoboken, NJ.

Metric Conversion Factors for Common Steel Design Units Used in the AISC Specification

Unit	Multiply	by	to obtain
length	inch (in.)	25.4	millimeters (mm)
length	foot (ft)	0.304 8	meters (m)
mass	pound-mass (lbm)	0.453 6	kilogram (kg)
stress	ksi	6.895	megapascals (MPa), N/mm^2
moment	kip-in	113 000	N-mm
energy	ft-lbf	1.356	joule (J)
force	kip (1 000 lbf)	4 448	newton (N)
force	psf	47.88	pascal (Pa), N/m^2
force	plf	14.59	N/m
temperature	To convert °F to °C: $t_c° = (t_f° - 32)/1.8$		

force in lbf or N = mass $\times$ g
where g, acceleration due to gravity = 32.2 ft/sec^2 = 9.81 m/sec^2

Specification for Structural Joints Using High-Strength Bolts

December 31, 2009

Supersedes the June 30, 2004 *Specification for Structural Joints Using ASTM A325 or A490 Bolts.*

Prepared by RCSC Committee A.1—Specifications and approved by the Research Council on Structural Connections.

www.boltcouncil.org
RESEARCH COUNCIL ON STRUCTURAL CONNECTIONS
c/o AISC, One East Wacker Drive, Suite 700, Chicago, Illinois 60601

RCSC © 2010
by
Research Council on Structural Connections

All rights reserved. This book or any part thereof must not be reproduced in any form without the written permission of the publisher.

The information presented in this publication has been prepared in accordance with recognized engineering principles and is for general information only. While it is believed to be accurate, this information should not be used or relied upon for any specific application without competent professional examination and verification of its accuracy, suitability, and applicability by a licensed professional engineer, designer, or architect. The publication of the material contained herein is not intended as a representation or warranty on the part of the Research Council on Structural Connections or of any other person named herein, that this information is suitable for any general or particular use or of freedom from infringement of any patent or patents. Anyone making use of this information assumes all liability arising from such use.

Caution must be exercised when relying upon other specifications and codes developed by other bodies and incorporated by reference herein since such material may be modified or amended from time to time subsequent to the printing of this edition. The Institute bears no responsibility for such material other than to refer to it and incorporate it by reference at the time of the initial publication of this edition.

Printed in the United States of America

PREFACE

The purpose of the Research Council on Structural Connections (RCSC) is:

(1) To stimulate and support such investigation as may be deemed necessary and valuable to determine the suitability, strength and behavior of various types of structural connections;
(2) To promote the knowledge of economical and efficient practices relating to such structural connections; and,
(3) To prepare and publish related specifications and such other documents as necessary to achieving its purpose.

The Council membership consists of qualified structural engineers from academic and research institutions, practicing design engineers, suppliers and manufacturers of fastener components, fabricators, erectors and code-writing authorities.

The first Specification approved by the Council, called the *Specification for Assembly of Structural Joints Using High Tensile Steel Bolts*, was published in January 1951. Since that time the Council has published sixteen successive editions. Each was developed through the deliberations and approval of the full Council membership and based upon past successful usage, advances in the state of knowledge and changes in engineering design practice. This edition of the Council's *Specification for Structural Joints Using High-Strength Bolts* continues the tradition of earlier editions. The major changes are:

- ASTM F2280 bolt assemblies were added to the *Specification.*
- ASTM F1136 coating usage was added to the *Specification.*
- References to ASTM A153 have been replaced with an updated reference to ASTM F2329.
- Section 3.3 was modified to provide a clarification on thermally-cut holes.
- Section 3.4 was modified in regard to burrs over 1/16 in. high.
- Table 5.1 was modified to show new shear design values for joints based on overall joint length.
- Sections 7 and 8 had a number of clarifications added in relation to pre-installation testing and installation practices. Table 7.1 was added to clarify the minimum bolt pretension for pre-installation verification.
- The "snug-tight" definition and references have been modified to make this terminology less subjective in its application.
- Appendix B Tables were brought into consistency with equivalent provisions in Section 5.

In addition, typographical changes have been made throughout this Specification.

By the Research Council on Structural Connections,

Charles J. Carter Chairman	Gregory S. Miazga Vice Chairman	Chad M. Larson Secretary/Treasurer

Abolhassan Astaneh-Asl	Joe Greeenslade	William A. Milek, Jr.
Joseph G. Bahadrian	Gilbert Y. Grondin	Eugene R. Mitchell
Rodney L. Baxter	Jerome F. Hajjar	Heath E. Mitchell
John J. Biel	Allen J. Harrold	Scott Munter
Peter C. Birkemoe	Robert A. Hay III	Thomas M. Murray
David W. Bogaty	Ian C. Hodgson	Gian A. Rassati
Salim V. Brahimi	Charles E. Hundley	James M. Ricles
Richard C. Brown	Kaushik A. Iyer	Thomas J. Schlafly
Frank M.A. Buck	Emmanuel P. Jefferson	Gerald E. Schroeder
Bruce M. Butler	Suja G. John	David F. Sharp
Helen H. Chen	Donald L. Johnson	Robert E. Shaw, Jr.
Robert J. Connor	Ronald B. Johnson	Victor Shneur
Bastiaan E. Cornelissen	Peter F. Kasper	W. Lee Shoemaker
Chris Curven	Daniel J. Kaufman	James A. Swanson
Nick E. Deal	James S. Kennedy	Arun A. Syam
James M. Doyle	Lawrence A. Kloiber	Thomas S. Tarpy, Jr.
Dean G. Droddy	Richard F. Knoblock	William A. Thornton
Peter Dusicka	Lawrence Kruth	Raymond H.R. Tide
Douglas B. Ferrell	Geoffrey L. Kulak	Todd C. Ude
John W. Fisher	Bill R. Lindley, II	Amit H. Varma
Patrick J. Fortney	Kenneth B. Lohr	M. Blane Vines
Danilo M. Francisco	Hussam N. Mahmoud	Floyd J. Vissat
Karl H. Frank	Curtis Mayes	I. Wayne Wallace
Michael C. Friel	Jonathan C. McGormley	Charles J. Wilson
James B. Gialamas	David L. McKenzie	Alfred F. Wong
Rodney D. Gibble	Neil L. McMillan	Joseph A. Yura
Michael I. Gilmor	Jinesh K. Mehta	

TABLE OF CONTENTS

Symbols ..... **vii**
Glossary ..... **ix**

Section 1. General Requirements **1**
1.1. Scope 1
1.2. Loads, Load Factors and Load Combinations 1
1.3. Referenced Standards and Specifications 2
1.4. Drawing Information 3

Section 2. Fastener Components **5**
2.1. Manufacturer Certification of Fastener Components 5
2.2. Storage of Fastener Components 5
2.3. Heavy-Hex Structural Bolts 6
2.4. Heavy-Hex Nuts 13
2.5. Washers 14
2.6. Washer-Type Indicating Devices 14
2.7. Twist-Off-Type Tension-Control Bolt Assemblies 15
2.8. Alternative-Design Fasteners 16

Section 3. Bolted Parts **17**
3.1. Connected Plies 17
3.2. Faying Surfaces 17
3.3. Bolt Holes 21
3.4. Burrs 24

Section 4. Joint Type **26**
4.1. Snug-Tightened Joints 28
4.2. Pretensioned Joints 29
4.3. Slip-Critical Joints 30

Section 5. Limit States in Bolted Joints **31**
5.1. Design Shear and Tensile Strength 32
5.2. Combined Shear and Tension 35
5.3. Design Bearing Strength at Bolt Holes 36
5.4. Design Slip Resistance 38
5.5. Tensile Fatigue 42

Section 6. Use of Washers **44**
6.1. Snug-Tightened Joints 44
6.2. Pretensioned Joints and Slip-Critical Joints 44

Section 7. Pre-Installation Verification **47**
7.1. Tension Calibrator 47
7.2. Required Testing 49

Section 8. Installation 51
8.1. Snug-Tightened Joints 51
8.2. Pretensioned Joints and Slip-Critical Joints 51

Section 9. Inspection 59
9.1. Snug-Tightened Joints 59
9.2. Pretensioned Joints 59
9.3. Slip-Critical Joints 62

Section 10. Arbitration 63

Appendix A. Testing Method to Determine the Slip Coefficient for Coatings Used in Bolted Joints 65
A1. General Provisions 65
A2. Test Plates and Coating of the Specimens 66
A3. Slip Tests 69
A4. Tension Creep Tests 73

Appendix B. Allowable Stress Design (ASD) Alternative 75

References 80

Index 82

SYMBOLS

The following symbols are used in this Specification.

A_b Cross-sectional area based upon the nominal diameter of bolt, in.^{2}

D Slip probability factor as described in Section 5.4.2

D_u Multiplier that reflects the ratio of the mean installed bolt pretension to the specified minimum bolt pretension, T_m, as described in Section 5.4.1

F_n Nominal strength (per unit area), ksi

F_u Specified minimum tensile strength (per unit area), ksi

I Moment of inertia of the built-up member about the axis of buckling (see the Commentary to Section 5.4), in.^{4}

L Total length of the built-up member (see the Commentary to Section 5.4), in.

L_s Length of a connection measured between extreme bolt hole centers parallel to the line of force (see Table 5.1), in.

L_c Clear distance, in the direction of load, between the edge of the hole and the edge of the adjacent hole or the edge of the material, in.

N_b Number of bolts in the joint

P_u Required strength in compression, kips; Axial compressive force in the built-up member (see the Commentary to Section 5.4), kips

Q First moment of area of one component about the axis of buckling of the built-up member (see the Commentary to Section 5.4), in.^{3}

R_n Nominal strength, kips

R_s Service-load slip resistance, kips

T Applied service load in tension, kips

T_m Specified minimum bolt pretension (for pretensioned joints as specified in Table 8.1), kips

T_u	Required strength in tension (factored tensile load), kips
V_u	Required strength in shear (factored shear load), kips
d_b	Nominal diameter of bolt, in.
t	Thickness of the connected material, in.
t'	Total thickness of fillers or shims (see Section 5.1), in.
k_s	Slip coefficient for an individual specimen determined in accordance with Appendix A
ϕ	Resistance factor
ϕR_n	Design strength, kips
μ	Mean slip coefficient

GLOSSARY

The following terms are used in this Specification. Where used, they are italicized to alert the user that the term is defined in this Glossary.

Coated Faying Surface. A *faying surface* that has been primed, primed and painted or protected against corrosion, except by hot-dip galvanizing.

Connection. An assembly of one or more *joints* that is used to transmit forces between two or more members.

Contractor. The party or parties responsible to provide, prepare and assemble the fastener components and connected parts described in this Specification.

Design Strength. ϕR_n, the resistance provided by an element or *connection*; the product of the *nominal strength*, R_n, and the resistance factor ϕ.

Engineer of Record. The party responsible for the design of the structure and for the approvals that are required in this Specification (see Section 1.4 and the corresponding Commentary).

Fastener Assembly. An assembly of fastener components that is supplied, tested and installed as a unit.

Faying Surface. The plane of contact between two plies of a *joint*.

Firm Contact. The condition that exists on a *faying surface* when the plies are solidly seated against each other, but not necessarily in continuous contact.

Galvanized Faying Surface. A *faying surface* that has been hot-dip galvanized.

Grip. The total thickness of the plies of a *joint* through which the bolt passes, exclusive of washers or direct-tension indicators.

Guide. The *Guide to Design Criteria for Bolted and Riveted Joints*, 2nd Edition (Kulak et al., 1987).

High-Strength Bolt. An ASTM A325 or A490 bolt, an ASTM F1852 or F2280 twist-off-type tension-control bolt or an alternative-design fastener that meets the requirements in Section 2.8.

Inspector. The party responsible to ensure that the *contractor* has satisfied the provisions of this Specification in the work.

Joint. A bolted assembly with or without collateral materials that is used to join two structural elements.

Lot. In this Specification, the term *lot* shall be taken as that given in the ASTM Standard as follows:

Product	ASTM Standard	See Lot Definition in ASTM Section
Conventional bolts	A325	9.4
	A490	11.4
Twist-off-type tension-control bolt assemblies	F1852	13.4
	F2280	3.1.1
Nuts	A563	9.2
Washers	F436	9.2
Compressible-washer-type direct tension indicators	F959	10.2.2

Manufacturer. The party or parties that produce the components of the *fastener assembly*.

Mean Slip Coefficient. μ, the ratio of the frictional shear load at the *faying surface* to the total normal force when slip occurs.

Nominal Strength. The capacity of a structure or component to resist the effects of loads, as determined by computations using the specified material strengths and dimensions and equations derived from accepted principles of structural mechanics or by field tests or laboratory tests of scaled models, allowing for modeling effects and differences between laboratory and field conditions.

Pretensioned Joint. A *joint* that transmits shear and/or tensile loads in which the bolts have been installed in accordance with Section 8.2 to provide a pretension in the installed bolt.

Protected Storage. The continuous protection of fastener components in closed containers in a protected shelter as described in the Commentary to Section 2.2.

Prying Action. Lever action that exists in *connections* in which the line of application of the applied load is eccentric to the axis of the bolt, causing deformation of the fitting and an amplification of the axial tension in the bolt.

Required Strength. The load effect acting on an element or *connection* determined by structural analysis from the factored loads using the most appropriate critical load combination.

Routine Observation. Periodic monitoring of the work in progress.

Shear/Bearing Joint. A *snug-tightened joint* or *pretensioned joint* with bolts that transmit shear loads and for which the design criteria are based upon the shear strength of the bolts and the bearing strength of the connected materials.

Slip-Critical Joint. A *joint* that transmits shear loads or shear loads in combination with tensile loads in which the bolts have been installed in accordance with Section 8.2 to provide a pretension in the installed bolt (clamping force on the *faying surfaces*), and with *faying surfaces* that have been prepared to provide a calculable resistance against slip.

Snug-Tightened Joint. A *joint* in which the bolts have been installed in accordance with Section 8.1. Snug tight is the condition that exists when all of the plies in a connection have been pulled into *firm contact* by the bolts in the *joint* and all of the bolts in the *joint* have been tightened sufficiently to prevent the removal of the nuts without the use of a wrench.

Start of Work. Any time prior to the installation of *high-strength bolts* in structural *connections* in accordance with Section 8.

Sufficient Thread Engagement. Having the end of the bolt extending beyond or at least flush with the outer face of the nut; a condition that develops the strength of the bolt.

Supplier. The party that sells the fastener components to the party that will install them in the work.

Tension Calibrator. A calibrated tension-indicating device that is used to verify the acceptability of the pretensioning method when a *pretensioned joint* or *slip-critical joint* is specified.

Uncoated Faying Surface. A *faying surface* that has neither been primed, painted, nor galvanized and is free of loose scale, dirt and other foreign material.

SPECIFICATION FOR STRUCTURAL JOINTS USING HIGH-STRENGTH BOLTS

SECTION 1. GENERAL REQUIREMENTS

1.1. Scope

This Specification covers the design of bolted *joints* and the installation and inspection of the assemblies of fastener components listed in Section 1.3, the use of alternative-design fasteners as permitted in Section 2.8 and alternative washer-type indicating devices as permitted in Section 2.6.2, in structural steel *joints*. This Specification relates only to those aspects of the connected materials that bear upon the performance of the fastener components. The Symbols, Glossary and Appendices are a part of this Specification.

Commentary:

This Specification deals principally with two strength grades of *high-strength bolts*, ASTM A325 and A490, and with their design, installation and inspection in structural steel *joints*. Equivalent fasteners, however, such as ASTM F1852 (equivalent to ASTM A325) and F2280 (equivalent to ASTM A490) twist-off-type tension-control bolt assemblies, are also covered. These provisions may not be relied upon for high-strength fasteners of other chemical composition, mechanical properties, or size. These provisions do not apply when material other than steel is included in the *grip*; nor are they applicable to anchor rods.

This Specification relates only to the performance of fasteners in structural steel *joints* and those few aspects of the connected material that affect this performance. Many other aspects of *connection* design and fabrication are of equal importance and must not be overlooked. For more general information on design and issues relating to *high-strength bolting* and the connected material, refer to current steel design textbooks and the *Guide to Design Criteria for Bolted and Riveted Joints*, 2nd Edition (Kulak et al., 1987).

1.2. Loads, Load Factors and Load Combinations

The design and construction of the structure shall conform to an applicable load and resistance factor design specification for steel structures. Because factored load combinations account for the reduced probabilities of maximum loads acting concurrently, the *design strengths* given in this Specification shall not be increased. Appendix B is included as an alternative approach.

Commentary:

This Specification is written in the load and resistance factor design (LRFD) format, which provides a method of proportioning structural components such that no applicable limit state is exceeded when the structure is subject to all

appropriate load combinations. When a structure or structural component ceases to fulfill the intended purpose in some way, it is said to have exceeded a limit state. Strength limit states concern maximum load-carrying capability, and are related to safety. Serviceability limit states are usually related to performance under normal service conditions, and usually are not related to strength or safety. The term "resistance" includes both strength limit states and serviceability limit states.

The *design strength* ϕR_n is the *nominal strength* R_n multiplied by the resistance factor ϕ. The factored load is the sum of the nominal loads multiplied by load factors, with due recognition of load combinations that account for the improbability of simultaneous occurrence of multiple transient load effects at their respective maximum values. The *design strength* ϕR_n of each structural component or assemblage must equal or exceed the *required strength* (V_u, T_u, etc.).

Although loads, load factors and load combinations are not explicitly specified in this Specification, the resistance factors herein are based upon those specified in ASCE 7. When the design is governed by other load criteria, the resistance factors specified herein should be adjusted as appropriate.

1.3. Referenced Standards and Specifications

The following standards and specifications are referenced herein:

American Institute of Steel Construction

Specification for Structural Steel Buildings, June 22, 2010

American National Standards Institute

ANSI/ASME B18.2.6-06 *Fasteners for Use in Structural Applications*

American Society for Testing and Materials

ASTM A123-09 *Standard Specification for Zinc* (*Hot-Dip Galvanized*) *Coatings on Iron and Steel Products*

ASTM A194-09 *Specification for Carbon and Alloy Steel Nuts for Bolts for High Pressure or High-Temperature Service, or Both*

ASTM A325-09a *Standard Specification for Structural Bolts, Steel, Heat Treated, 120/105 ksi Minimum Tensile Strength*

ASTM A490-09 *Standard Specification for Heat-Treated Steel Structural Bolts, 150 ksi Minimum Tensile Strength*

ASTM A563-07a *Standard Specification for Carbon and Alloy Steel Nuts*

ASTM B695-04(2009) *Standard Specification for Coatings of Zinc Mechanically Deposited on Iron and Steel*

ASTM F436-09 *Standard Specification for Hardened Steel Washers*

ASTM F959-09 *Standard Specification for Compressible-Washer-Type Direct Tension Indicators for Use with Structural Fasteners*

ASTM F1136-04 *Standard Specification for Zinc/Aluminum Corrosion Protective Coatings for Fasteners*
ASTM F1852-08 *Standard Specification for "Twist Off" Type Tension Control Structural Bolt/Nut/Washer Assemblies, Steel, Heat Treated, 120/105 ksi Minimum Tensile Strength*
ASTM F2280-08e1 *Standard Specification for "Twist Off" Type Tension Control Structural Bolt/Nut/Washer Assemblies, Steel, Heat Treated, 150 ksi Minimum Tensile Strength*
ASTM F2329-05 *Standard Specification for Zinc Coating, Hot-Dip, Requirements for Application to Carbon and Alloy Steel Bolts, Screws, Washers, Nuts, and Special Threaded Fasteners*

American Society of Civil Engineers
ASCE 7-05 *Minimum Design Loads for Buildings and Other Structures*

IFI: Industrial Fastener Institute
IFI 144 *Test Evaluation Procedures for Coating Qualification Intended for Use on High-Strength Structural Bolts*

SSPC: The Society for Protective Coatings
SSPC-PA2-04 *Measurement of Dry Coating Thickness With Magnetic Gages*

Commentary:
Familiarity with the referenced AISC, ASCE, ASME, ASTM and SSPC specification requirements is necessary for the proper application of this Specification. The discussion of referenced specifications in this Commentary is limited to only a few frequently overlooked or misunderstood items.

1.4. Drawing Information

The *Engineer of Record* shall specify the following information in the contract documents:

(1) The ASTM designation and type (Section 2) of bolt to be used;
(2) The *joint* type (Section 4);
(3) The required class of slip resistance if *slip-critical joints* are specified (Section 4); and,
(4) Whether slip is checked at the factored-load level or the service-load level, if *slip-critical joints* are specified (Section 5).

Commentary:
A summary of the information that the *Engineer of Record* is required to provide in the contract documents is provided in this Section. The parenthetical reference after each listed item indicates the location of the actual requirement

in this Specification. In addition, the approval of the *Engineer of Record* is required in this Specification in the following cases:

(1) For the reuse of non-galvanized ASTM A325 bolts (Section 2.3.3);
(2) For the use of alternative washer-type indicating devices that differ from those that meet the requirements of ASTM F959, including the corresponding installation and inspection requirements that are provided by the *manufacturer* (Section 2.6.2);
(3) For the use of alternative-design fasteners, including the corresponding installation and inspection requirements that are provided by the *manufacturer* (Section 2.8);
(4) For the use of faying-surface coatings in *slip-critical joints* that provide a *mean slip coefficient* determined per Appendix A, but differing from Class A or Class B (Section 3.2.2(b));
(5) For the use of thermal cutting in the production of bolt holes (Section 3.3);
(6) For the use of oversized (Section 3.3.2), short-slotted (Section 3.3.3) or long slotted holes (Section 3.3.4) in lieu of standard holes;
(7) For the use of a value of D_u other than 1.13 (Section 5.4.1); and,
(8) For the use of a value of D other than 0.80 (Section 5.4.2).

SECTION 2. FASTENER COMPONENTS

2.1. Manufacturer Certification of Fastener Components

Manufacturer certifications documenting conformance to the applicable specifications required in Sections 2.3 through 2.8 for all fastener components used in the *fastener assemblies* shall be available to the *Engineer of Record* and *inspector* prior to assembly or erection of structural steel.

Commentary:
Certification by the *manufacturer* or *supplier* of *high-strength bolts*, nuts, washers and other components of the *fastener assembly* is required to ensure that the components to be used are identifiable and meet the requirements of the applicable ASTM Specifications.

2.2. Storage of Fastener Components

Fastener components shall be protected from dirt and moisture in closed containers at the site of installation. Only as many fastener components as are anticipated to be installed during the work shift shall be taken from *protected storage*. Fastener components that are not incorporated into the work shall be returned to *protected storage* at the end of the work shift. Fastener components shall not be cleaned or modified from the as-delivered condition.

Fastener components that accumulate rust or dirt shall not be incorporated into the work unless they are requalified as specified in Section 7. ASTM F1852 and F2280 twist-off-type tension-control bolt assemblies and alternative-design fasteners that meet the requirements in Section 2.8 shall not be relubricated, except by the *manufacturer*.

Commentary:
Protected storage requirements are specified for *high-strength bolts*, nuts, washers and other fastener components with the intent that the condition of the components be maintained as nearly as possible to the as-manufactured condition until they are installed in the work. This involves:

(1) The storage of the fastener components in closed containers to protect from dirt and corrosion;
(2) The storage of the closed containers in a protected shelter;
(3) The removal of fastener components from *protected storage* only as necessary; and,
(4) The prompt return of unused fastener components to *protected storage*.

To facilitate manufacture, prevent corrosion and facilitate installation, the *manufacturer* may apply various coatings and oils that are present in the as-manufactured condition. As such, the condition of supplied fastener components

or the *fastener assembly* should not be altered to make them unsuitable for pretensioned installation.

If fastener components become dirty, rusty, or otherwise have their as-received condition altered, they may be unsuitable for pretensioned installation. It is also possible that a *fastener assembly* may not pass the pre-installation verification requirements of Section 7. Except for ASTM F1852 and F2280 twist-off-type tension-control bolt assemblies (Section 2.7) and some alternative-design fasteners (Section 2.8), fastener components can be cleaned and lubricated by the fabricator or the erector. Because the acceptability of their installation is dependent upon specific lubrication, ASTM F1852 and F2280 twist-off-type tension-control bolt assemblies and some alternative-design fasteners are suitable only if the *manufacturer* lubricates them.

2.3. Heavy-Hex Structural Bolts

2.3.1. Specifications: Heavy-hex structural bolts shall meet the requirements of ASTM A325 or ASTM A490. The *Engineer of Record* shall specify the ASTM designation and type of bolt (see Table 2.1) to be used.

2.3.2. Geometry: Heavy-hex structural bolt dimensions shall meet the requirements of ANSI/ASME B18.2.6. The bolt length used shall be such that the end of the bolt extends beyond or is at least flush with the outer face of the nut when properly installed.

2.3.3 Reuse: ASTM A490 bolts, ASTM F1852 and F2280 twist-off-type tension-control bolt assemblies, and galvanized or Zn/Al Inorganic coated ASTM A325 bolts shall not be reused. When approved by the *Engineer of Record*, black ASTM A325 bolts are permitted to be reused. Touching up or re-tightening bolts that may have been loosened by the installation of adjacent bolts shall not be considered to be a reuse.

Commentary:
ASTM A325 and ASTM A490 currently provide for two types (according to metallurgical classification) of *high-strength bolts*, supplied in diameters from ½ in. to 1½ in. inclusive. Type 1 covers medium carbon steel for ASTM A325 bolts and alloy steel for ASTM A490 bolts. Type 3 covers *high-strength bolts* that have improved atmospheric corrosion resistance and weathering characteristics. (Reference to Type 2 ASTM A325 and Type 2 A490 bolts, which appeared in previous editions of this Specification, has been removed following the removal of similar reference within the ASTM A325 and A490 Specifications). When the bolt type is not specified, either Type 1 or Type 3 may be supplied at the option of the *manufacturer*. Note that ASTM F1852 and ASTM F2280 twist-off-type tension-control bolt assemblies may be manufactured with a button head or hexagonal head; other requirements for these *fastener assemblies* are found in Section 2.7.

Table 2.1. Acceptable ASTM A563 Nut Grade and Finish and ASTM F436 Washer Type and Finish

ASTM Desig.	Bolt Type	Bolt Finish [d]	ASTM A563 Nut Grade and Finish [d]	ASTM F436 Washer Type and Finish [a,d]
A325	1	**Plain (uncoated)**	C, C3, D, DH [c] and DH3; plain	1; plain
		Galvanized	DH [c]; galvanized and lubricated	1; galvanized
		Zn/Al Inorganic, per ASTM F1136 Grade 3	DH [c]; Zn/Al Inorganic, per ASTM F1136 Grade 5	1; Zn/Al Inorganic, per ASTM F1136 Grade 3
	3	**Plain**	C3 and DH3; plain	3; plain
F1852	1	**Plain (uncoated)**	C, C3, DH [c] and DH3; plain	1; plain [b]
		Mechanically Galvanized	DH [c]; mechanically galvanized and lubricated	1; mechanically galvanized [b]
		Zn/Al Inorganic, per ASTM F1136 Grade 3	DH [c]; Zn/Al Inorganic, per ASTM F1136 Grade 5	1; Zn/Al Inorganic, per ASTM F1136 Grade 3 [b]
	3	**Plain**	C3 and DH3; plain	3; plain [b]
A490	1	**Plain**	DH[c] and DH3; plain	1; plain
		Zn/Al Inorganic, per ASTM F1136 Grade 3	DH [c]; Zn/Al Inorganic, per ASTM F1136 Grade 5	1; Zn/Al Inorganic, per ASTM F1136 Grade 3
	3	**Plain**	DH3; plain	3; plain
F2280	1	**Plain**	DH [c] and DH3; plain	1; plain [b]
	3	**Plain**	DH3; plain	3; plain [b]

[a] Applicable only if washer is required in Section 6.

[b] Required in all cases under nut per Section 6.

[c] The substitution of ASTM A194 grade 2H nuts in place of ASTM A563 grade DH nuts is permitted.

[d] "Galvanized" as used in this table refers to hot-dip galvanizing in accordance with ASTM F2329 or mechanical galvanizing in accordance with ASTM B695.

[e] "Zn/Al Inorganic" as used in this table refers to application of a Zn/Al Corrosion Protective Coating in accordance with ASTM F1136 which has met all the requirements of IFI-144.

Regular heavy-hex structural bolts and twist-off-type tension-control bolt assemblies are required by ASTM Specifications to be distinctively marked. Certain markings are mandatory. In addition to the mandatory markings, the *manufacturer* may apply additional distinguishing markings. The mandatory and sample optional markings are illustrated in Figure C-2.1.

ASTM Specifications permit the galvanizing of ASTM A325 bolts but not ASTM A490 bolts. Similarly, the application of zinc to ASTM A490 bolts by metallizing or mechanical coating is not permitted because the effect of mechanical galvanizing on embrittlement and delayed cracking of ASTM A490 bolts has not been fully investigated to date.

Bolt/Nut	Type 1	Type 3
ASTM A325 bolt	Three radial lines 120° apart are optional	
ASTM F1852 bolt	Three radial lines 120° apart are optional	
ASTM A490 bolt		
ASTM F2280 bolt		
ASTM A563 nut	Arcs indicate Grade C	Arcs with "3" indicate Grade C3
	Grade D	
	Grade DH	Grade DH3

Notes:
1. XYZ represents the manufacturer's identification mark.
2. ASTM F1852 and ASTM F2280 twist-off-type tension-control bolt assemblies are also produced with a heavy-hex head that has similar markings.

Figure C-2.1. Required marks for acceptable bolt and nut assemblies.

An extensive investigation conducted in accordance with IFI-144 was completed in 2006 and presented to the ASTM F16 Committee on Fasteners (F16 Research Report RR: F16-1001). The investigation demonstrated that Zn/Al Inorganic Coating, when applied per ASTM F1136 Grade 3 to ASTM A490 bolts, does not cause delayed cracking by internal hydrogen embrittlement, nor does it accelerate environmental hydrogen embrittlement by cathodic hydrogen absorption. It was determined that this is an acceptable finish to be used on Type 1 ASTM A325 and A490 bolts and F1852 and F2280 twist-off-type tension-control bolt assemblies.

Although these bolts are typically not used in this manner, prior to embedding bolts coated with Zn/Al Inorganic Coating in concrete, it should be confirmed that there is no negative impact (to the bolt or the concrete) caused by the reaction of the intended concrete mix and the aluminum in the coating.

Galvanized *high-strength bolts* and nuts must be considered as a manufactured *fastener assembly*. Insofar as the hot-dip galvanized bolt and nut assembly is concerned, four principal factors must be considered so that the provisions of this Specification are understood and properly applied. These are:

(1) The effect of the hot-dip galvanizing process on the mechanical properties of high-strength steels;
(2) The effect of over-tapping for hot-dip galvanized coatings on the nut stripping strength;
(3) The effect of galvanizing and lubrication on the torque required for pretensioning; and,
(4) Shipping requirements.

Birkemoe and Herrschaft (1970) showed that, in the as-galvanized condition, galvanizing increases the friction between the bolt and nut threads as well as the variability of the torque-induced pretension. A lower required torque and more consistent results are obtained if the nuts are lubricated. Thus, it is required in ASTM A325 that a galvanized bolt and lubricated galvanized or Zn/Al Inorganic coated nut be assembled in a steel *joint* with an equivalently coated washer and tested by the *supplier* prior to shipment. This testing must show that the galvanized or Zn/Al Inorganic coated nut with the lubricant provided may be rotated from the snug-tight condition well in excess of the rotation required for pretensioned installation without stripping. This requirement applies to hot-dip galvanized, mechanically galvanized, and Zn/Al Inorganic coated fasteners. The above requirements clearly indicate that:

(1) Galvanized and Zn/Al Inorganic coated *high-strength bolts* and nuts must be treated as a *fastener assembly*;
(2) The *supplier* must supply nuts that have been lubricated and tested with the supplied *high-strength bolts*;

(3) Nuts and *high-strength bolts* must be shipped together in the same shipping container; and,
(4) The purchase of galvanized *high-strength bolts* and galvanized nuts from separate *suppliers* is not in accordance with the intent of the ASTM Specifications because the control of over-tapping, the testing and application of lubricant and the *supplier* responsibility for the performance of the assembly would clearly not have been provided as required.

Because some of the lubricants used to meet the requirements of ASTM Specifications are water soluble, it is advisable that galvanized *high-strength bolts* and nuts be shipped and stored in plastic bags or in sealed wood or metal containers. Containers of fasteners with hot-wax-type lubricants should not be subjected to heat that would cause depletion or change in the properties of the lubricant.

Both the hot-dip galvanizing process (ASTM F2329) and the mechanical galvanizing process (ASTM B695) are recognized in ASTM A325. The effects of the two processes upon the performance characteristics and requirements for proper installation are distinctly different. Therefore, distinction between the two must be noted in the comments that follow. In accordance with ASTM A325, all threaded components of the *fastener assembly* must be galvanized by the same process and the *supplier's* option is limited to one process per item with no mixed processes in a *lot*. Mixing *high-strength bolts* that are galvanized by one process with nuts that are galvanized by the other may result in an unworkable assembly.

Steels in the 200 ksi and higher tensile-strength range are subject to embrittlement if hydrogen is permitted to remain in the steel and the steel is subjected to high tensile stress. The minimum tensile strength of ASTM A325 bolts is 105 ksi or 120 ksi, depending upon the diameter, and maximum hardness limits result in production tensile strengths well below the critical range. The maximum tensile strength for ASTM A490 bolts was set at 170 ksi to provide a little more than a ten-percent margin below 200 ksi. However, because *manufacturers* must target their production slightly higher than the required minimum, ASTM A490 bolts close to the critical range of tensile strength must be anticipated. For black *high-strength bolts*, this is not a cause for concern. However, if the bolt is hot-dip galvanized, delayed brittle fracture in service is a concern because of the possibility of the introduction of hydrogen during the pickling operation of the hot-dip galvanizing process and the subsequent "sealing-in" of the hydrogen by the zinc coating. There also exists the possibility of cathodic hydrogen absorption arising from the corrosion process in certain aggressive environments.

ASTM A325 and A490 bolts are manufactured to dimensions as specified in ANSI/ASME B18.2.6. The basic dimensions, as defined in Figure C-2.2, are shown in Table C-2.1.

Table C-2.1. Bolt and Nut Dimensions

Nominal Bolt Diameter, d_b, in.	Heavy- Hex Bolt Dimensions, in.			Heavy-Hex Nut Dims., in.	
	Width across flats, *F*	Height, H_1	Thread Length, *T*	Width across flats, *W*	Height, H_2
½	⅞	5⁄16	1	⅞	31⁄64
⅝	1 1⁄16	25⁄64	1¼	1 1⁄16	39⁄64
¾	1¼	15⁄32	1⅜	1¼	47⁄64
⅞	1 7⁄16	35⁄64	1½	1 7⁄16	55⁄64
1	1⅝	39⁄64	1¾	1⅝	63⁄64
1⅛	1 13⁄16	1 1⁄16	2	1 13⁄16	1 7⁄64
1¼	2	25⁄32	2	2	1 7⁄32
1⅜	2 3⁄16	27⁄32	2¼	2 3⁄16	1 11⁄32
1½	2⅜	15⁄16	2¼	2⅜	1 15⁄32

The principal geometric features of heavy-hex structural bolts that distinguish them from bolts for general application are the size of the head and the unthreaded body length. The head of the heavy-hex structural bolt is specified to be the same size as a heavy-hex nut of the same nominal diameter so that the ironworker may use the same wrench or socket either on the bolt head and/or on the nut. With the specific exception of fully threaded ASTM A325T bolts as discussed below, heavy-hex structural bolts have shorter threaded lengths than bolts for general applications. By making the body length of the bolt the control dimension, it has been possible to exclude the thread from all shear planes when desirable, except for the case of thin outside parts adjacent to the nut.

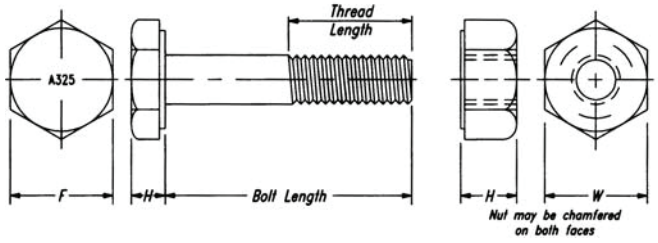

Figure C-2.2. Heavy-hex structural bolt and heavy-hex nut.

The shorter threaded lengths provided with heavy-hex structural bolts tend to minimize the threaded portion of the bolt within the *grip*. Accordingly, care must also be exercised to provide adequate threaded length between the nut and the bolt head to enable appropriate installation without jamming the nut on the thread run-out.

Depending upon the increments of supplied bolt lengths, the full thread may extend into the *grip* for an assembly without washers by as much as ⅜ in. for ½, ⅝, ¾, ⅞, 1¼, and 1½ in. diameter *high-strength bolts* and as much as ½ in. for 1, 1⅛, and 1⅜ in. diameter *high-strength bolts*. When the thickness of the ply closest to the nut is less than the ⅜ in. or ½ in. dimensions given above, it may still be possible to exclude the threads from the shear plane, when required, depending upon the specific combination of bolt length, *grip* and number of washers used under the nut (Carter, 1996). If necessary, the next increment of bolt length can be specified with ASTM F436 washers in sufficient number to both exclude the threads from the shear plane and ensure that the assembly can be installed with adequate threads included in the *grip* for proper installation.

At maximum accumulation of tolerances from all components in the *fastener assembly*, the thread run-out will cross the shear plane for the critical combination of bolt length and *grip* used to select the foregoing rules of thumb for ply thickness required to exclude the threads. This condition is not of concern, however, for two reasons. First, it is too unlikely that all component tolerances will accumulate at their maximum values to warrant consideration. Second, even if the maximum accumulation were to occur, the small reduction in shear strength due to the presence of the thread run-out (not a full thread) would be negligible.

There is an exception to the foregoing thread length requirements for ASTM A325 bolts, but not for ASTM A490 bolts, ASTM F1852 or ASTM F2280 twist-off-type tension-control bolt assemblies. Supplementary requirements in ASTM A325 permit the purchaser to specify a bolt that is threaded for the full length of the shank, when the bolt length is equal to or less than four times the nominal diameter. This exception is provided to increase economy through simplified ordering and inventory control in the fabrication and erection of some structures. It is particularly useful in those structures in which the strength of the *connection* is dependent upon the bearing strength of relatively thin connected material rather than the shear strength of the bolt, whether with threads in the shear plane or not. As required in ASTM A325, *high-strength bolts* ordered to such supplementary requirements must be marked with the symbol A325T.

To determine the required bolt length, the value shown in Table C-2.2 should be added to the *grip* (i.e., the total thickness of all connected material, exclusive of washers). For each ASTM F436 washer that is used, add 5⁄32 in.; for each beveled washer, add 5⁄16 in. The tabulated values provide appropriate allowances for manufacturing tolerances and also provide *sufficient thread*

Table C-2.2. Bolt Length Selection Increment

Nominal Bolt Diameter, d_b, in.	To Determine the Required Bolt Length, Add to Grip, in.
½	11/16
⅝	⅞
¾	1
⅞	1⅛
1	1¼
1⅛	1½
1¼	1⅝
1⅜	1¾
1½	1⅞

engagement with an installed heavy-hex nut. The length determined by the use of Table C-2.2 should be adjusted to the nearest ¼-in. length increment (½-in. length increment for lengths exceeding 6 in.). A more extensive table for bolt length selection based upon these rules is available (Carter, 1996).

Pretensioned installation involves the inelastic elongation of the portion of the threaded length between the nut and the thread run-out. ASTM A490 bolts and galvanized ASTM A325 bolts possess sufficient ductility to undergo one pretensioned installation, but are not consistently ductile enough to undergo a second pretensioned installation. Black ASTM A325 bolts, however, possess sufficient ductility to undergo more than one pretensioned installation as suggested in the *Guide* (Kulak et al., 1987). As a simple rule of thumb, a black ASTM A325 bolt is suitable for reuse if the nut can be run up the threads by hand.

2.4. Heavy-Hex Nuts

2.4.1. Specifications: Heavy-hex nuts shall meet the requirements of ASTM A563. The grade and finish of such nuts shall be as given in Table 2.1.

2.4.2. Geometry: Heavy-hex nut dimensions shall meet the requirements of ANSI/ASME B18.2.6.

Commentary:
Heavy-hex nuts are required by ASTM Specifications to be distinctively marked. Certain markings are mandatory. In addition to the mandatory markings, the *manufacturer* may apply additional distinguishing markings. The

mandatory markings and sample optional markings are illustrated in Figure C-2.1.

Hot-dip galvanizing affects the stripping strength of the bolt-nut assembly because, to accommodate the relatively thick zinc coatings of non-uniform thickness on bolt threads, it is usual practice to hot-dip galvanize the blank nut and then to tap the nut over-size. This results in a reduction of thread engagement with a consequent reduction of the stripping strength. Only the stronger hardened nuts have adequate strength to meet ASTM thread strength requirements after over-tapping. Therefore, as specified in ASTM A325, only ASTM A563 grade DH are suitable for use as galvanized nuts. This requirement should not be overlooked if non-galvanized nuts are purchased and then sent to a local galvanizer for hot-dip galvanizing. Because the mechanical galvanizing process results in a more uniformly distributed and smooth zinc coating, nuts may be tapped over-size before galvanizing by an amount that is less than that required for the hot-dip process before galvanizing.

Despite the thin-film of the Zn/Al Inorganic Coating, tapping the nuts over-size may be necessary. Similar to mechanical galvanizing, the process results in a comparatively uniform and evenly distributed coating.

In earlier editions, this Specification permitted the use of ASTM A194 grade 2H nuts in the same finish as that permitted for ASTM A563 nuts in the following cases: with ASTM A325 Type 1 plain, Type 1 galvanized and Type 3 plain bolts and with ASTM A490 Type 1 plain bolts. Reference to ASTM A194 grade 2H nuts has been removed following the removal of similar reference within the ASTM A325 and A490 Specifications. However, it should be noted that ASTM A194 grade 2H nuts remain acceptable in these applications as indicated by footnote in Table 2.1, should they be available.

ASTM A563 nuts are manufactured to dimensions as specified in ANSI/ASME B18.2.6. The basic dimensions, as defined in Figure C-2.2, are shown in Table C-2.1

2.5. Washers

Flat circular washers and square or rectangular beveled washers shall meet the requirements of ASTM F436, except as provided in Table 6.1. The type and finish of such washers shall be as given in Table 2.1.

2.6. Washer-Type Indicating Devices

The use of washer-type indicating devices is permitted as described in Sections 2.6.1 and 2.6.2.

2.6.1. Compressible-Washer-Type Direct Tension Indicators: Compressible-washer-type direct tension indicators shall meet the requirements of ASTM F959.

2.6.2. Alternative Washer-Type Indicating Devices: When approved by the *Engineer of Record*, the use of alternative washer-type indicating devices that differ from those that meet the requirements of ASTM F959 is permitted.

Detailed installation instructions shall be prepared by the *manufacturer* in a supplemental specification that is approved by the *Engineer of Record* and shall provide for:

(1) The required character and frequency of pre-installation verification;
(2) The alignment of bolt holes to permit insertion of the bolt without undue damage to the threads;
(3) The placement of *fastener assemblies* in all types and sizes of holes, including placement and orientation of the alternative and regular washers;
(4) The systematic assembly of the *joint*, progressing from the most rigid part of the *joint* until the connected plies are in *firm contact*; and,
(5) The subsequent systematic pretensioning of all bolts in the *joint*, progressing from the most rigid part of the *joint* in a manner that will minimize relaxation of previously pretensioned bolts.

Detailed inspection instructions shall be prepared by the *manufacturer* in a supplemental specification that is approved by the *Engineer of Record* and shall provide for:

(1) Observation of the required pre-installation verification testing; and,
(2) Subsequent *routine observation* to ensure the proper use of the alternative washer-type indicating device.

2.7. Twist-Off-Type Tension-Control Bolt Assemblies

2.7.1. Specifications: Twist-off-type tension-control bolt assemblies shall meet the requirements of ASTM F1852 or F2280. The *Engineer of Record* shall specify the type of bolt (Table 2.1) to be used.

2.7.2. Geometry: Twist-off-type tension-control bolt assembly dimensions shall meet the requirements of ASTM F1852 or ASTM F2280. The bolt length used shall be such that the end of the bolt extends beyond or is at least flush with the outer face of the nut when properly installed.

Commentary:
It is the policy of the Research Council on Structural Connections to directly recognize only those fastener components that are manufactured to meet the requirements in an approved ASTM specification. Prior to this edition, the RCSC Specification provided for the use of ASTM A325 and A490 bolts, and F1852 twist-off-type tension-control bolt assemblies directly and alternative-design fasteners meeting detailed requirements similar to those in Section 2.8 when approved by the *Engineer of Record*. With this edition, ASTM F2280

twist-off-type tension-control bolt assemblies are now recognized directly. Essentially, ASTM F2280 relates an ASTM A490-equivalent product to a specific method of installation that is suitable for use in all *joint* types as described in Section 8. Provision has also been retained for approval by the *Engineer of Record* of other alternative-design fasteners that meet the detailed requirements in Section 2.8.

If galvanized, ASTM F1852 twist-off-type tension-control bolt assemblies are required in ASTM F1852 to be mechanically galvanized.

2.8. Alternative-Design Fasteners

When approved by the *Engineer of Record*, the use of alternative-design fasteners is permitted if they:

(1) Meet the materials, manufacturing and chemical composition requirements of ASTM A325 or ASTM A490, as applicable;
(2) Meet the mechanical property requirements of ASTM A325 or ASTM A490 in full-size tests;
(3) Have a body diameter and bearing area under the bolt head and nut that is equal to or greater than those provided by a bolt and nut of the same nominal dimensions specified in Sections 2.3 and 2.4; and,
(4) Are supplied and used in the work as a *fastener assembly*.

Such alternative-design fasteners are permitted to differ in other dimensions from those of the specified *high-strength bolts* and nuts.

Detailed installation instructions shall be prepared by the *manufacturer* in a supplemental specification that is approved by the *Engineer of Record* and shall provide for:

(1) The required character and frequency of pre-installation verification;
(2) The alignment of bolt holes to permit insertion of the alternative-design fastener without undue damage;
(3) The placement of *fastener assemblies* in all holes, including any washer requirements as appropriate;
(4) The systematic assembly of the *joint*, progressing from the most rigid part of the *joint* until the connected plies are in *firm contact*; and,
(5) The subsequent systematic pretensioning of all *fastener assemblies* in the *joint*, progressing from the most rigid part of the *joint* in a manner that will minimize relaxation of previously pretensioned bolts.

Detailed inspection instructions shall be prepared by the *manufacturer* in a supplemental specification that is approved by the *Engineer of Record* and shall provide for:

(1) Observation of the required pre-installation verification testing; and,
(2) Subsequent *routine observation* to ensure the proper use of the alternative-design fastener.

SECTION 3. BOLTED PARTS

3.1. Connected Plies

All connected plies that are within the *grip* of the bolt and any materials that are used under the head or nut shall be steel with faying surfaces that are uncoated, coated or galvanized as defined in Section 3.2. Compressible materials shall not be placed within the *grip* of the bolt. The slope of the surfaces of parts in contact with the bolt head and nut shall be equal to or less than 1:20 with respect to a plane that is normal to the bolt axis.

Commentary:
The presence of gaskets, insulation or any compressible materials other than the specified coatings within the *grip* would preclude the development and/or retention of the installed pretensions in the bolts, when required.

ASTM A325, A490, F1852, and F2280 bolt assemblies are ductile enough to deform to a surface with a slope that is less than or equal to 1:20 with respect to a plane normal to the bolt axis. Greater slopes are undesirable because the resultant localized bending decreases both the strength and the ductility of the bolt.

3.2. Faying Surfaces

Faying surfaces and surfaces adjacent to the bolt head and nut shall be free of dirt and other foreign material. Additionally, *faying surfaces* shall meet the requirements in Sections 3.2.1 or 3.2.2.

3.2.1. *Snug-Tightened Joints* and *Pretensioned Joints*: The *faying surfaces* of *snug-tightened joints* and *pretensioned joints* as defined in Sections 4.1 and 4.2 are permitted to be uncoated, coated with coatings of any formulation or galvanized.

Commentary:
In both *snug-tightened joints* and *pretensioned joints*, the ultimate strength is dependent upon shear transmitted by the bolts and bearing of the bolts against the connected material. It is independent of any frictional resistance that may exist on the *faying surfaces*. Consequently, since slip resistance is not an issue, the *faying surfaces* are permitted to be uncoated, coated, or galvanized without regard to the resulting slip coefficient obtained.

For pretensioned joints, caution should be used in the specification and application of thick coatings within the *faying surface*. Although slip resistance is not required, fastener assemblies in joints with thick or multi-layer coatings may exhibit significant loss of pretension because of compressive creep in softer coatings such as epoxies, alkyds, vinyls, acrylics, and urethanes. Previous bolt relaxation studies have been conducted using uncoated steel with black bolts or galvanized steel with galvanized bolts. Galvanized surfaces ranged up to

approximately 4 mils of thickness, of which approximately half the thickness was the compressible soft pure zinc surface layer. The underlying zinc-iron layers are very hard and would exhibit little creep. See *Guide*, Section 4.4. Tests have indicated that significant bolt pretension may be lost when the total coating thickness within the joint approaches 15 mils per surface, and that surface coatings beneath the bolt head and nut can contribute to additional reduction in pretension.

3.2.2 *Slip-Critical Joints*: The *faying surfaces* of *slip-critical joints* as defined in Section 4.3, including those of filler plates and finger shims, shall meet the following requirements:

(a) *Uncoated Faying Surfaces*: *Uncoated faying surfaces* shall be free of scale, except tight mill scale, and free of coatings, including inadvertent overspray, in areas closer than one bolt diameter but not less than 1 in. from the edge of any hole and in all areas within the bolt pattern or shall be blast cleaned (Class B).

(b) *Coated Faying Surfaces*: *Coated faying surfaces* shall first be blast cleaned and subsequently coated with a coating that is qualified in accordance with the requirements in Appendix A as a Class A or Class B coating as defined in Section 5.4. Alternatively, when approved by the *Engineer of Record*, coatings that provide a *mean slip coefficient* that differs from Class A or Class B are permitted when:

(1) The *mean slip coefficient* μ is established by testing in accordance with the requirements in Appendix A; and,

(2) The design slip resistance is determined in accordance with Section 5.4 using this coefficient, except that, for design purposes, a value of μ greater than 0.50 shall not be used.

The plies of *slip-critical joints* with *coated faying surfaces* shall not be assembled before the coating has cured for the minimum time that was used in the qualifying tests.

(c) *Galvanized Faying Surfaces*: *Galvanized faying surfaces* shall first be hot dip galvanized in accordance with the requirements of ASTM A123 and subsequently roughened by means of hand wire brushing. Power wire brushing is not permitted. When prepared by roughening, the *galvanized faying surface* is designated as Class C for design.

Commentary:
Slip-critical joints are those *joints* that have specified *faying surface* conditions that, in the presence of the clamping force provided by pretensioned fasteners, resist a design load solely by friction and without displacement at the *faying*

surfaces. Consequently, it is necessary to prepare the *faying surfaces* in a manner so that the desired slip performance is achieved.

Clean mill scale steel surfaces (Class A, see Section 5.4.1) and blast-cleaned steel surfaces (Class B, see Section 5.4.1) can be used within *slip-critical joints*. When used, it is necessary to keep the *faying surfaces* free of coatings, including inadvertent overspray.

Corrosion often occurs on uncoated blast-cleaned steel surfaces (Class B, see Section 5.4.1) due to exposure between the time of fabrication and subsequent erection. In normal atmospheric exposures, this corrosion is not detrimental and may actually increase the slip resistance of the *joint*. Yura et al. (1981) found that the Class B slip coefficient could be maintained for up to one year prior to *joint* assembly.

Polyzois and Frank (1986) demonstrated that, for plate material with thickness in the range of ⅜ in. to ¾ in., the contact pressure caused by bolt pretension is concentrated on the *faying surfaces* in annular rings around and close to the bolts. In this study, unqualified paint on the *faying surfaces* away from the edge of the bolt hole by not less than 1 in. nor the bolt diameter did not reduce the slip resistance. However, this would not likely be the case for *joints* involving thicker material, particularly those with a large number of bolts on multiple gage lines; the Table 8.1 minimum bolt pretension might not be adequate to completely flatten and pull thicker material into tight contact around every bolt. Instead, the bolt pretension would be balanced by contact pressure on the regions of the *faying surfaces* that are in contact. To account for both possibilities, it is required in this Specification that all areas between the bolts be free of coatings, including overspray, as illustrated in Figure C-3.1.

As a practical matter, the smaller coating-free area can be laid out and protected more easily using masking located relative to the bolt-hole pattern than relative to the limits of the complete area of *faying surface* contact with varying and uncertain edge distance. Furthermore, the narrow coating strip around the perimeter of the *faying surface* minimizes the required field touch-up of uncoated material outside of the *joint*.

Polyzois and Frank (1986) also investigated the effect of various degrees of inadvertent overspray on slip resistance. It was found that even a small amount of overspray of unqualified paint (that is, not qualified as a Class A or Class B coating) within the specified coating-free area on clean mill scale can reduce the slip resistance significantly. On blast-cleaned surfaces, however, the presence of a small amount of overspray was not as detrimental. For simplicity, this Specification requires that all overspray be prohibited from areas that are required to be free of coatings in *slip-critical joints* regardless of whether the surface is clean mill scale steel or blast-cleaned steel.

In the 1980 edition of this Specification, generic names for coatings applied to *faying surfaces* were the basis for categories of allowable working stresses in *slip-critical* (friction) *joints*. Frank and Yura (1981) demonstrated that the slip coefficients for coatings described by a generic type are not unique

values for a given generic coating description or product, but rather depend also upon the type of vehicle used. Small differences in formulation from *manufacturer* to *manufacturer* or from *lot* to *lot* with a single *manufacturer* can significantly affect slip coefficients if certain essential variables within a generic type are changed. Consequently, it is unrealistic to assign coatings to categories with relatively small incremental differences between categories based solely upon a generic description.

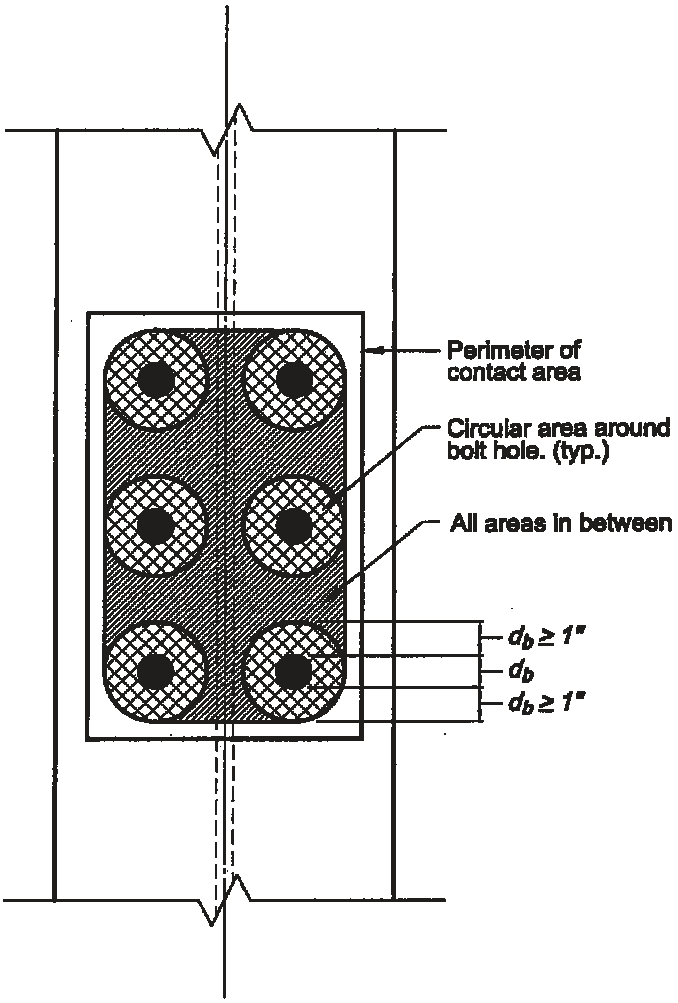

Figure C-3.1. Faying surfaces of slip-critical connections painted with unqualified paints.

When the *faying surfaces* of a *slip-critical joint* are to be protected against corrosion, a qualified coating must be used. A qualified coating is one that has been tested in accordance with Appendix A, the sole basis for qualification of any coating to be used in conjunction with this Specification. Coatings can be qualified as follows:

(1) As a Class A coating as defined in Section 5.4.1;
(2) As a Class B coating as defined in Section 5.4.1; or,
(3) As a coating with a *mean slip coefficient* μ other than 0.33 (Class A) but not greater than 0.50 (Class B).

Requalification is required if any essential variable associated with surface preparation, paint manufacture, application method or curing requirements is changed. See Appendix A.

For slip-critical joints, coating testing as prescribed in Appendix A includes creep tests, which incorporate relaxation in the fastener and the effect of the coating itself. Users should verify the coating thicknesses used in the Appendix A testing and ensure that the actual coating thickness does not exceed that tested. See Appendix A, Commentary to Section A3.

Frank and Yura (1981) also investigated the effect of varying the time between coating the *faying surfaces* and assembly of the *joint* and pretensioning the bolts in order to ascertain if partially cured paint continued to cure within the assembled *joint* over a period of time. The results indicated that all curing effectively ceased at the time the *joint* was assembled and paint that was not fully cured at that time acted as a lubricant. The slip resistance of a *joint* that was assembled after a time less than the curing time used in the qualifying tests was severely reduced. Thus, the curing time prior to mating the *faying surfaces* is an essential parameter to be specified and controlled during construction.

The *mean slip coefficient* for clean hot-dip galvanized surfaces is on the order of 0.19 as compared with a factor of about 0.33 for clean mill scale. Birkemoe and Herrschaft (1970) showed that this *mean slip coefficient* can be significantly improved by treatments such as hand wire brushing or light "brush-off" grit blasting. In either case, the treatment must be controlled to achieve visible roughening or scoring. Power wire brushing is unsatisfactory because it may polish rather than roughen the surface, or remove the coating.

Field experience and test results have indicated that galvanized assemblies may continue to slip under sustained loading (Kulak et al., 1987; pp. 198-208). Tests of hot-dip galvanized *joints* subjected to sustained loading show a creep-type behavior that was not observed in short-duration or fatigue-type load application. See also the Commentary to Appendix A.

3.3. Bolt Holes

The nominal dimensions of standard, oversized, short-slotted and long-slotted holes for *high-strength bolts* shall be equal to or less than those shown in

Table 3.1. Holes larger than those shown in Table 3.1 are permitted when specified or approved by the *Engineer of Record.* Where thermally cut holes are permitted, the surface roughness profile of the hole shall not exceed 1,000 microinches as defined in ASME B46.1. Occasional gouges not more than 1/16 in. in depth are permitted.

Thermally cut holes produced by mechanically guided means are permitted in statically loaded *joints*. Thermally cut holes produced free hand shall be permitted in statically loaded *joints* if approved by the *Engineer of Record*. For cyclically loaded *joints*, thermally cut holes shall be permitted if approved by the *Engineer of Record*.

Commentary:
The footnotes in Table 3.1 provide for slight variations in the dimensions of bolt holes from the nominal dimensions. When the dimensions of bolt holes are such that they exceed these permitted variations, the bolt hole must be treated as the next larger type.

Slots longer than standard long slots may be required to accommodate construction tolerances or expansion *joints*. Larger oversized holes may be necessary to accommodate construction tolerances or misalignments. In the latter two cases, the Specification provides no guidance for further reduction of *design strengths* or allowable loads. Engineering design considerations should include, as a minimum, the effects of edge distance, net section, reduction in clamping force in *slip-critical joints*, washer requirements, bearing capacity, and hole deformation.

For thermally cut holes produced free hand, it is usually necessary to grind the hole surface after thermal cutting in order to achieve a maximum surface roughness profile of 1,000 microinches.

Slotted holes in statically loaded *joints* are often produced by punching or drilling the hole ends and thermally cutting the sides of the slots by mechanically guided means. The sides of such slots should be ground smooth, particularly at the junctures of the thermal cuts to the hole ends.

For cyclically loaded *joints*, test results have indicated that when no major slip occurs in the *joint*, fretting fatigue failure usually occurs in the gross section prior to fatigue failure in the net section (Kulak et al., 1987, pp. 116, 117). Conversely, when slip occurs in the *joints* of cyclically loaded *connections*, failure usually occurs in the net section and the edge of a bolt hole becomes the point of crack initiation (Kulak et al., 1987, pp. 118). Therefore, for cyclically loaded *joints* designed as slip critical, the method used to produce bolt holes (either thermal cutting or drilling) should not influence the ultimate failure load, as failure usually occurs in the gross section when no major slip occurs.

3.3.1. Standard Holes: In the absence of approval by the *Engineer of Record* for the use of other hole types, standard holes shall be used in all plies of bolted *joints*.

Table 3.1. Nominal Bolt Hole Dimensions

Nominal Bolt Diameter, d_b, in.	Nominal Bolt Hole Dimensions [a,b], in.			
	Standard (diameter)	Oversized (diameter)	Short-slotted (width × length)	Long-slotted (width × length)
½	9⁄16	5⁄8	9⁄16 × 11⁄16	9⁄16 × 1¼
⅝	11⁄16	13⁄16	11⁄16 × 7⁄8	11⁄16 × 1 9⁄16
¾	13⁄16	15⁄16	13⁄16 × 1	13⁄16 × 1⅞
⅞	15⁄16	1 1⁄16	15⁄16 × 1⅛	15⁄16 × 2 3⁄16
1	1 1⁄16	1¼	1 1⁄16 × 1 5⁄16	1 1⁄16 × 2½
≥1⅛	d_b + 1⁄16	d_b + 5⁄16	(d_b + 1⁄16) × (d_b + 3⁄8)	(d_b + 1⁄16) × (2.5d_b)

[a] The upper tolerance on the tabulated nominal dimensions shall not exceed 1⁄32 in. Exception: In the width of slotted holes, gouges not more than 1⁄16 in. deep are permitted.

[b] The slightly conical hole that naturally results from punching operations with properly matched punches and dies is acceptable.

Commentary:
The use of bolt holes 1⁄16 in. larger than the bolt installed in them has been permitted since the first publication of this Specification. Allen and Fisher (1968) showed that larger holes could be permitted for *high-strength bolts* without adversely affecting the bolt shear or member bearing strength. However, the slip resistance can be reduced by the failure to achieve adequate pretension initially or by the relaxation of the bolt pretension as the highly compressed material yields at the edge of the hole or slot. The provisions for oversized and slotted holes in this Specification are based upon these findings and the additional concern for the consequences of a slip of significant magnitude if it should occur in the direction of the slot. Because an increase in hole size generally reduces the net area of a connected part, the use of oversized holes or of slotted holes is subject to approval by the *Engineer of Record*.

3.3.2. Oversized Holes: When approved by the *Engineer of Record*, oversized holes are permitted in any or all plies of *slip-critical joints* as defined in Section 4.3.

Commentary:
See the Commentary to Section 3.3.1.

3.3.3. Short-Slotted Holes: When approved by the *Engineer of Record*, short-slotted holes are permitted in any or all plies of *snug-tightened joints* as defined in Section 4.1, and *pretensioned joints* as defined in Section 4.2, provided the applied load is approximately perpendicular (between 80 and 100 degrees) to the axis of the slot. When approved by the *Engineer of Record*, short-slotted holes are permitted in any or all plies of *slip-critical joints* as defined in Section 4.3 without regard for the direction of the applied load.

Commentary:
See the Commentary to Section 3.3.1.

3.3.4. Long-Slotted Holes: When approved by the *Engineer of Record*, long-slotted holes are permitted in only one ply at any individual *faying surface* of *snug-tightened joints* as defined in Section 4.1, and *pretensioned joints* as defined in Section 4.2, provided the applied load is approximately perpendicular (between 80 and 100 degrees) to the axis of the slot. When approved by the *Engineer of Record*, long-slotted holes are permitted in one ply only at any individual *faying surface* of *slip-critical joints* as defined in Section 4.3 without regard for the direction of the applied load. Fully inserted finger shims between the *faying surfaces* of load-transmitting elements of bolted *joints* are not considered a long-slotted element of a *joint*; nor are they considered to be a ply at any individual *faying surface*. However, finger shims must have the same faying surface as the rest of the plies.

Commentary:
See the Commentary to Section 3.3.1.

Finger shims are devices that are often used to permit the alignment and plumbing of structures. When these devices are fully and properly inserted, they do not have the same effect on bolt pretension relaxation or the *connection* performance, as do long-slotted holes in an outer ply. When fully inserted, the shim provides support around approximately 75 percent of the perimeter of the bolt in contrast to the greatly reduced area that exists with a bolt that is centered in a long slot. Furthermore, finger shims are always enclosed on both sides by the connected material, which should be effective in bridging the space between the fingers.

3.4. Burrs

Burrs less than or equal to 1⁄16 in. in height are permitted to remain on *faying surfaces* of all *joints*. Burrs larger than 1⁄16 in. in height shall be removed or reduced to 1⁄16 in. or less from the *faying surfaces* of all *joints*.

Commentary:
Polyzois and Yura (1985) and McKinney and Zwerneman (1993) demonstrated that the slip resistance of *joints* was either unchanged or slightly improved by

the presence of burrs. Therefore, small (1/16 in. or less) burrs need not be removed. On the other hand, parallel tests in the same program demonstrated that large burrs (over 1/16 in.) could cause a small increase in the required nut rotation from the snug-tight condition to achieve the specified pretension with the turn-of-nut pretensioning method. Therefore, the Specification requires that all large burrs be removed or reduced in height.

Note that prior to pretensioning, the snug-tightening procedure is required to bring the plies into *firm contact*. If *firm contact* has not been achieved after snugging due to the presence of burrs, additional snugging is required to flatten the burrs, bringing the plies into *firm contact*.

SECTION 4. JOINT TYPE

For *joints* with fasteners that are loaded in shear or combined shear and tension, the *Engineer of Record* shall specify the *joint* type in the contract documents as snug-tightened, pretensioned or slip-critical. For *slip-critical joints*, the required class of slip resistance in accordance with Section 5.4 shall also be specified. For *joints* with fasteners that are loaded in tension only, the *Engineer of Record* shall specify the *joint* type in the contract documents as snug-tightened or pretensioned. Table 4.1 summarizes the applications and requirements of the three *joint* types.

Table 4.1. Summary of Applications and Requirements for Bolted Joints

Load Transfer	Application	*Joint* Type [a,b]	*Faying Surface* Prep.?	Install per Section	Inspect per Section	Arbitrate per Section 10?
Shear only	Resistance to shear load by shear/bearing	ST	No	8.1	9.1	No
	Resistance to shear by shear/bearing. Bolt pretension is required, but for reasons other than slip resistance.	PT	No	8.2	9.2	No
	Shear-load resistance by friction on faying surfaces is required.	SC	Yes [d]	8.2	9.3	If req'd to resolve dispute
Combined shear and tension	Resistance to shear load by shear/bearing. Tension load is static only. [c]	ST	No	8.1	9.1	No
	Resistance to shear by shear/bearing. Bolt pretension is required, but for reasons other than slip resistance.	PT	No	8.2	9.2	If req'd to resolve dispute
	Shear-load resistance by friction on faying surfaces is required.	SC	Yes [d]	8.2	9.3	If req'd to resolve dispute
Tension only	Static loading only. [c]	ST	No	8.1	9.1	No
	All other conditions of tension-only loading.	PT	No	8.2	9.2	If req'd to resolve dispute

[a] Under *Joint* Type: ST = snug-tightened, PT = pretensioned and SC = slip-critical; See Section 4.

[b] See Sections 4 and 5 for the design requirements for each *joint* type.

[c] Per Section 4.2, the use of ASTM A490 or F2280 bolts in *snug-tightened joints* with tensile loads is not permitted.

[d] See Section 3.2.2.

Commentary:

When first approved by the Research Council on Structural Connections, in January, 195l, the "Specification for Assembly of Structural Joints Using High-Strength Bolts" merely permitted the substitution of a like number of ASTM A325 bolts for hot driven ASTM A141[1] steel rivets of the same nominal diameter. Additionally, it was required that all bolts be pretensioned and that all *faying surfaces* be free of paint; hence, satisfying the requirements for a *slip-critical joint* by the present-day definition. As revised in 1954, the omission of paint was required to apply only to "*joints* subject to stress reversal, impact or vibration, or to cases where stress redistribution due to *joint* slippage would be undesirable." This relaxation of the earlier provision recognized the fact that, in many applications, movement of the connected parts that brings the bolts into bearing against the sides of their holes is in no way detrimental. Bolted *joints* were then designated as "bearing type," "friction type," or "direct tension." With the 1985 edition of this Specification, these designations were changed to "shear/bearing," "slip-critical," and "direct tension," respectively, and snug-tightened installation was permitted for many *shear/bearing joints*. *Snug-tightened joints* are also permitted for qualified applications involving ASTM A325 bolts in direct tension.

If non-pretensioned bolts are used in the type of *joint* that places the bolts in shear, load is transferred by shear in the bolts and bearing stress in the connected material. At the ultimate limit state, failure will occur by shear failure of the bolts, by bearing failure of the connected material or by failure of the member itself. On the other hand, if pretensioned bolts are used in such a *joint*, the frictional force that develops between the connected plies will initially transfer the load. Until the frictional force is exceeded, there is no shear in the bolts and no bearing stress in the connected components. Further increase of load places the bolts into shear and against the connected material in bearing, just as was the case when non-pretensioned bolts were used. Since it is known that the pretension in bolts will have been dissipated by the time bolt shear failure takes place (Kulak et al., 1987; p. 49), the ultimate limit state of a pretensioned bolted *joint* is the same as an otherwise identical *joint* that uses non-pretensioned bolts.

Because the consequences of slip into bearing vary from application to application, the determination of whether a *joint* can be designated as snug-tightened or as pretensioned or rather must be designated as slip-critical is best left to judgment and a decision on the part of the *Engineer of Record*. In the case of *joints* with three or more bolts in holes with only a small clearance, the freedom to slip generally does not exist. It is probable that normal fabrication tolerances and erection procedures are such that one or more bolts are in bearing even before additional load is applied. Such is the case for standard holes and for slotted holes loaded transverse to the axis of the slot.

Joints that are required to be *slip-critical joints* include:

(1) Those cases where slip movement could theoretically exceed an amount deemed by the *Engineer of Record* to affect the serviceability of the structure or through

[1] ASTM A141 (discontinued in 1967) became identified as A502 Grade 1 (discontinued 1999).

excessive distortion to cause a reduction in strength or stability, even though the resistance to fracture of the *connection* and yielding of the member may be adequate; and,

(2) Those cases where slip of any magnitude must be prevented, such as in *joints* subject to significant load reversal and *joints* between elements of built-up compression members in which any slip could cause a reduction of the flexural stiffness required for the stability of the built-up member.

In this Specification, the provisions for the design, installation and inspection of bolted *joints* are dependent upon the type of *joint* that is specified by the *Engineer of Record*. Consequently, it is required that the *Engineer of Record* identify the *joint* type in the contract documents.

4.1. Snug-Tightened Joints

Except as required in Sections 4.2 and 4.3, *snug-tightened joints* are permitted.

Bolts in *snug-tightened joints* shall be designed in accordance with the applicable provisions of Sections 5.1, 5.2 and 5.3, installed in accordance with Section 8.1 and inspected in accordance with Section 9.1. As indicated in Section 4 and Table 4.1, requirements for *faying surface* condition shall not apply to *snug-tightened joints*.

Commentary:

Recognizing that the ultimate strength of a *connection* is independent of the bolt pretension and slip movement, there are numerous practical cases in the design of structures where, if slip occurs, it will not be detrimental to the serviceability of the structure. Additionally, there are cases where slip of the *joint* is desirable to permit rotation in a *joint* or to minimize the transfer of moment. To provide for these cases while at the same time making use of the shear strength of *high-strength bolts*, *snug-tightened joints* are permitted.

The maximum amount of slip that can occur in a *joint* is, theoretically, equal to twice the hole clearance. In practical terms, it is observed in laboratory and field experience to be much less; usually, about one-half the hole clearance. Acceptable inaccuracies in the location of holes within a pattern of bolts usually cause one or more bolts to be in bearing in the initial, unloaded condition. Furthermore, even with perfectly positioned holes, the usual method of erection causes the weight of the connected elements to put some of the bolts into direct bearing at the time the member is supported on loose bolts and the lifting crane is unhooked. Additional loading in the same direction would not cause additional *joint* slip of any significance.

Snug-tightened joints are also permitted for statically loaded applications involving ASTM A325 bolts and ASTM F1852 twist-off-type tension-control bolt assemblies in direct tension. However, snug-tightened installation is not permitted for these fasteners in applications involving non-

static loading, nor for applications involving ASTM A490 bolts and ASTM F2280 twist-off-type tension-control bolt assemblies.

4.2. Pretensioned Joints

Pretensioned joints are required in the following applications:

(1) *Joints* in which fastener pretension is required in the specification or code that invokes this Specification;
(2) *Joints* that are subject to significant load reversal;
(3) *Joints* that are subject to fatigue load with no reversal of the loading direction;
(4) *Joints* with ASTM A325 or F1852 bolts that are subject to tensile fatigue; and,
(5) *Joints* with ASTM A490 or F2280 bolts that are subject to tension or combined shear and tension, with or without fatigue.

Bolts in *pretensioned joints* subject to shear shall be designed in accordance with the applicable provisions of Sections 5.1 and 5.3, installed in accordance with Section 8.2 and inspected in accordance with Section 9.2. Bolts in *pretensioned joints* subject to tension or combined shear and tension shall be designed in accordance with the applicable provisions of Sections 5.1, 5.2, 5.3 and 5.5, installed in accordance with Section 8.2 and inspected in accordance with Section 9.2. As indicated in Section 4 and Table 4.1, requirements for *faying surface* condition shall not apply to *pretensioned joints*.

Commentary:
Under the provisions of some other specifications, certain shear *connections* are required to be pretensioned, but are not required to be slip-critical. Several cases are given, for example, in AISC Specification Section J1.10 (AISC, 2010) wherein certain bolted *joints* in bearing *connections* are to be pretensioned regardless of whether or not the potential for slip is a concern. The AISC Specification requires that *joints* be pretensioned in the following circumstances:

(1) Column splices in buildings with high ratios of height to width;
(2) *Connections* of members that provide bracing to columns in tall buildings;
(3) Various *connections* in buildings with cranes over 5-ton capacity; and,
(4) *Connections* for supports of running machinery and other sources of impact or stress reversal.

When pretension is desired for reasons other than the necessity to prevent slip, a *pretensioned joint* should be specified in the contract documents.

4.3. Slip-Critical Joints

Slip-critical joints are required in the following applications involving shear or combined shear and tension:

(1) *Joints* that are subject to fatigue load with reversal of the loading direction;
(2) *Joints* that utilize oversized holes;
(3) *Joints* that utilize slotted holes, except those with applied load approximately normal (within 80 to 100 degrees) to the direction of the long dimension of the slot; and,
(4) *Joints* in which slip at the *faying surfaces* would be detrimental to the performance of the structure.

Bolts in *slip-critical joints* shall be designed in accordance with the applicable provisions of Sections 5.1, 5.2, 5.3, 5.4 and 5.5, installed in accordance with Section 8.2 and inspected in accordance with Section 9.3.

Commentary:

In certain cases, slip of a bolted *joint* in shear under service loads would be undesirable or must be precluded. Clearly, *joints* that are subject to reversed fatigue load must be slip-critical since slip may result in back-and-forth movement of the *joint* and the potential for accelerated fatigue failure. Unless slip is intended, as desired in a sliding expansion *joint*, slip in *joints* with long-slotted holes that are parallel to the direction of the applied load might be large enough to invalidate structural analyses that are based upon the assumption of small displacements.

For *joints* subject to fatigue load with respect to shear of the bolts that does not involve a reversal of load direction, there are two alternatives for fatigue design. The designer can provide either a *slip-critical joint* that is proportioned on the basis of the applied stress range on the gross section, or a *pretensioned joint* that is proportioned on the basis of applied stress range on the net section.

SECTION 5. LIMIT STATES IN BOLTED JOINTS

The design shear strength and design tensile strength of bolts shall be determined in accordance with Section 5.1. The interaction of combined shear and tension on bolts shall be limited in accordance with Section 5.2. The design bearing strength of the connected parts at bolt holes shall be determined in accordance with Section 5.3. Each of these *design strengths* shall be equal to or greater than the *required strength.* The axial load in bolts that are subject to tension or combined shear and tension shall be calculated with consideration of the effects of the externally applied tensile load and any additional tension resulting from *prying action* produced by deformation of the connected parts.

When slip resistance is required at the *faying surfaces* subject to shear or combined shear and tension, slip resistance shall be checked at either the factored-load level or service-load level, at the option of the *Engineer of Record.* When slip of the *joint* under factored loads would affect the ability of the structure to support the factored loads, the *design strength* determined in accordance with Section 5.4.1 shall be equal to or greater than the *required strength*. When slip resistance under service loads is the design criterion, the strength determined in accordance with Section 5.4.2 shall be equal to or greater than the effect of the service loads. In addition, slip-critical connections must meet the strength requirements to resist the factored loads as shear/bearing joints. Therefore, the strength requirements of Sections 5.1, 5.2 and 5.3 shall also be met.

When bolts are subject to cyclic application of axial tension, the stress determined in accordance with Section 5.5 shall be equal to or greater than the stress due to the effect of the service loads, including any additional tension resulting from prying action produced by deformation of the connected parts.

Commentary:

This section of the Specification provides the design requirements for *high-strength bolts* in bolted *joints*. However, this information is not intended to provide comprehensive coverage of the design of *high-strength bolted connections*. Other design considerations of importance to the satisfactory performance of the connected material, such as block shear rupture, shear lag, *prying action* and *connection* stiffness and its effect on the performance of the structure, are beyond the scope of this Specification and Commentary.

The design of bolted *joints* that transmit shear requires consideration of the shear strength of the bolts and the bearing strength of the connected material. If such *joints* are designated as *slip-critical joints*, the slip resistance must also be checked. This serviceability check can be made at the factored-load level (Section 5.4.1) or at the service-load level (Section 5.4.2). Regardless of which load level is selected for the check of slip resistance, the prevention of slip in the service-load range is the design criterion.

Parameters that influence the shear strength of bolted *joints* include:

(1) Geometric parameters – the ratio of the net area to the gross area of the connected parts, the ratio of the net area of the connected parts to the total shear-resisting area of the bolts and the length of the *joint*; and,
(2) Material parameter – the ratio of the yield strength to the tensile strength of the connected parts.

Using both mathematical models and physical testing, it was possible to study the influences of these parameters (Kulak et al., 1987; pp. 89-116 and 126-132). These showed that, under the rules that existed at that time the longest (and often the most important) *joints* had the lowest factor of safety, about 2.0 based on ultimate strength.

In general, bolted *joints* that are designed in accordance with the provisions of this Specification will have a higher reliability than will the members they connect. This occurs primarily because the resistance factors used in limit states for the design of bolted *joints* were chosen to provide a reliability higher than that used for member design. Additionally, the controlling strength limit state in the structural member, such as yielding or deflection, is usually reached well before the strength limit state in the *connection*, such as bolt shear strength or bearing strength of the connected material. The installation requirements vary with *joint* type and influence the behavior of the *joints* within the service-load range, however, this influence is ignored in all strength calculations. Secondary tensile stresses that may be produced in bolts in *shear/bearing joints*, such as through the flexing of double-angle *connections* to accommodate the simple-beam end rotation, need not be considered.

It is sometimes necessary to use *high-strength bolts* and fillet welds in the same *connection*, particularly as the result of remedial work. When these fastening elements act in the same shear plane, the combined strength is a function of whether the bolts are snug-tightened or pretensioned, the location of the bolts relative to the holes in which they are located and the orientation of the fillet welds. The fillet welds can be parallel or transverse to the direction of load. Manuel and Kulak (1999) provide an approach that can be used to calculate the *design strength* of such *joints*.

5.1. Design Shear and Tensile Strengths

Shear and tensile strengths shall not be reduced by the installed bolt pretension. For *joints*, the design shear and tensile strengths shall be taken as the sum of the strengths of the individual bolts.

The design strength in shear or the design strength in tension for an ASTM A325, A490, F1852 or F2280 bolt is ϕR_n, where $\phi = 0.75$ and:

$$R_n = F_n A_b \qquad \text{(Equation 5.1)}$$

where

R_n = nominal strength (shear strength per shear plane or tensile strength) of a bolt, kips;

Table 5.1. Nominal Strengths per Unit Area of Bolts

Applied Load Condition			*Nominal Strength* per Unit Area, F_n, ksi	
			ASTM A325 or F1852	ASTM A490 or F2280
Tension [a]	Static		90	113
	Fatigue		See Section 5.5	
Shear [a,b]	Threads included in shear plane	$L_s \le 38$ in.	54	68
		$L_s > 38$ in.	45	56
	Threads excluded from shear plane	$L_s \le 38$ in.	68	84
		$L_s > 38$ in.	56	70

[a] Except as required in Section 5.2.

[b] Reduction for values for $L_s > 38$ in. applies only when the joint is end loaded, such as splice plates on a beam or column flange.

F_n = nominal strength per unit area from Table 5.1 for the appropriate applied load conditions, ksi, adjusted for the presence of fillers as required below, and,

A_b = cross-sectional area based upon the nominal diameter of bolt, in.^{2}

When a bolt that carries load passes through fillers or shims in a shear plane that are equal to or less than ¼ in. thick, F_n from Table 5.1 shall be used without reduction. When a bolt that carries load passes through fillers or shims that are greater than ¼ in. thick, they shall be designed in accordance with one of the following procedures:

(1) For fillers or shims that are equal to or less than ¾ in. thick, F_n from Table 5.1 shall be multiplied by the factor [1 - 0.4(t' - 0.25)], where t' is the total thickness of fillers or shims, in., up to ¾ in.;
(2) The fillers or shims shall be extended beyond the *joint* and the filler or shim extension shall be secured with enough bolts to uniformly distribute the total force in the connected element over the combined cross-section of the connected element and the fillers or shims;
(3) The size of the *joint* shall be increased to accommodate a number of bolts that is equivalent to the total number required in (2) above; or,
(4) The *joint* shall be designed as a *slip-critical joint*. The slip resistance of the *joint* shall not be reduced for the presence of fillers or shims.

Commentary:

The nominal shear and tensile strengths of ASTM A325, F1852, A490 and F2280 bolts are given in Table 5.1. These values are based upon the work of a large number of researchers throughout the world, as reported in the *Guide* (Kulak et al., 1987; Tide, 2010). The *design strength* equals the *nominal strength* multiplied by a resistance factor ϕ.

The nominal shear strength is based upon the observation that the shear strength of a single *high-strength bolt* is about 0.62 times the tensile strength of that bolt (Kulak et al., 1987; pp. 44-50). In addition, a reduction factor of 0.90 is applied to joints up to 38 in. in length to account for an increase in bolt force due to minor secondary effects resulting from simplifying assumptions made in the modeling of structures that are commonly accepted in practice (e.g. truss bolted connections assumed pinned in the analysis model). Second order effects such as those resulting from the action of the applied loads on the deformed structure, should be accounted for through a second order analysis of the structure. As noted in Table 5.1, the average shear strength of bolts in *joints* longer than 38 in. in length is reduced by a factor of 0.75 instead of 0.90. This factor accounts for both the non-uniform force distribution between the bolts in a long joint and the minor secondary effects discussed above. Note that the 0.75 reduction factor does not apply in cases where the distribution of force is essentially uniform along the *joint*, such as the bolted *joints* in a shear *connection* at the end of a deep plate girder.

The average ratio of nominal shear strength for bolts with threads included in the shear plane to the nominal shear strength for bolts with threads excluded from the shear plane is 0.83 with a standard deviation of 0.03 (Frank and Yura, 1981). Conservatively, a reduction factor of 0.80 is used to account for the reduction in shear strength for a bolt with threads included in the shear plane but calculated with the area corresponding to the nominal bolt diameter. The case of a bolt in double shear with a non-threaded section in one shear plane and a threaded section in the other shear plane is not covered in this Specification for two reasons. First, the manner in which load is shared between these two dissimilar shear areas is uncertain. Second, the detailer's lack of certainty as to the orientation of the bolt placement might leave both shear planes in the threaded section. Thus, if threads are included in one shear plane, the conservative assumption is made that threads are included in all shear planes.

The tensile strength of a *high-strength bolt* is the product of its ultimate tensile strength per unit area and some area through the threaded portion. This area, called the tensile stress area, is a derived quantity that is a function of the relative thread size and pitch. For the usual sizes of structural bolts, it is about 75 percent of the nominal cross-sectional area of the bolt. Hence, the nominal tensile strengths per unit area given in Table 5.1 are 0.75 times the tensile strength of the bolt material. According to Equation 5.1, the nominal area of the bolt is then used to calculate the *design strength* in tension. The *nominal*

strengths so-calculated are intended to form the basis for comparison with the externally applied bolt tension plus any additional tension that results from *prying action* that is produced by deformation of the connected elements.

If pretensioned bolts are used in a *joint* that loads the bolts in tension, the question arises as to whether the pretension and the applied tension are additive. Because the compressed parts are being unloaded during the application of the external tensile force, the increase in bolt tension is minimal until the parts separate (Kulak et al., 1987; pp. 263-266). Thus, there will be little increase in bolt force above the pretension load under service loads. After the parts separate, the bolt acts as a tension member, as expected, and its *design strength* is that given in Equation 5.1 multiplied by the resistance factor ϕ.

Pretensioned bolts have torsion present during the installation process. Once the installation is completed, any residual torsion is quite small and will disappear entirely when the fastener is loaded to the point of plate separation. Hence, there is no question of torsion-tension interaction when considering the ultimate tensile strength of a *high-strength bolt* (Kulak et al., 1987; pp. 41-47).

When required, pretension is induced in a bolt by imposing a small axial elongation during installation, as described in the Commentary to Section 8. When the *joint* is subsequently loaded in shear, tension or combined shear and tension, the bolts will undergo significant deformations prior to failure that have the effect of overriding the small axial elongation that was introduced during installation, thereby removing the pretension. Measurements taken in laboratory tests confirm that the pretension that would be sustained if the applied load were removed is essentially zero before the bolt fails in shear (Kulak et al., 1987; pp. 93-94). Thus, the shear and tensile strengths of a bolt are not affected by the presence of an initial pretension in the bolt.

See also the Commentary to Section 5.5.

5.2. Combined Shear and Tension

When combined shear and tension loads are transmitted by an ASTM A325, A490, F1852 or F2280 bolt, the ultimate limit-state interaction shall be:

$$\left[\frac{T_u}{(\phi R_n)_t}\right]^2 + \left[\frac{V_u}{(\phi R_n)_v}\right]^2 \le 1 \qquad \text{(Equation 5.2)}$$

where

T_u = *required strength* in tension (factored tensile load) per bolt, kips;

V_u = *required strength* in shear (factored shear load) per bolt, kips;

$(\phi R_n)_t$ = *design strength* in tension determined in accordance with Section 5.1, kips; and,

$(\phi R_n)_v$ = *design strength* in shear determined in accordance with Section 5.1, kips.

Commentary:
When both shear forces and tensile forces act on a bolt, the interaction can be conveniently expressed as an elliptical solution (Chesson et al., 1965) that includes the elements of the bolt acting in shear alone and the bolt acting in tension alone. Although the elliptical solution provides the best estimate of the strength of bolts subject to combined shear and tension and is thus used in this Specification, the nature of the elliptical solution is such that it can be approximated conveniently using three straight lines (Carter et al., 1997). Earlier editions of this specification have used such linear representations for the convenience of design calculations. The elliptical interaction equation in effect shows that, for design purposes, significant interaction does not occur until either force component exceeds 20 percent of the limiting strength for that component.

5.3. Design Bearing Strength at Bolt Holes

For *joints*, the design bearing strength shall be taken as the sum of the strengths of the connected material at the individual bolt holes.

The design bearing strength of the connected material at a standard bolt hole, oversized bolt hole, short-slotted bolt hole independent of the direction of loading or long-slotted bolt hole with the slot parallel to the direction of the bearing load is ϕR_n, where $\phi = 0.75$ and:

(1) when deformation of the bolt hole at service load is a design consideration;

$$R_n = 1.2 L_c t F_u \le 2.4 d_b t F_u \qquad \text{(Equation 5.3)}$$

(2) when deformation of the bolt hole at service load is not a design consideration;

$$R_n = 1.5 L_c t F_u \le 3 d_b t F_u \qquad \text{(Equation 5.4)}$$

The design bearing strength of the connected material at a long-slotted bolt hole with the slot perpendicular to the direction of the bearing load is ϕR_n, where $\phi = 0.75$ and:

$$R_n = L_c t F_u \le 2 d_b t F_u \qquad \text{(Equation 5.5)}$$

In Equations 5.3, 5.4 and 5.5,

R_n = *nominal strength* (bearing strength of the connected material), kips;
F_u = specified minimum tensile strength per unit area of the connected material, ksi;
L_c = clear distance, in the direction of load, between the edge of the hole and the edge of the adjacent hole or the edge of the material, in.;
d_b = nominal diameter of bolt, in.; and,
t = thickness of the connected material, in.

Commentary:
The contact pressure at the interface between a bolt and the connected material can be expressed as a bearing stress on the bolt or on the connected material. The connected material is always critical. For simplicity, the bearing area is expressed as the bolt diameter times the thickness of the connected material in bearing. The governing value of the bearing stress has been determined from extensive experimental research and a further limitation on strength was derived from the case of a bolt at the end of a tension member or near another fastener.

The design equations are based upon the models presented in the *Guide* (Kulak et al., 1987; pp. 141-143), except that the clear distance to another hole or edge is used in the Specification formulation rather than the bolt spacing or end distance as used in the *Guide* (see Figure C-5.1). Equation 5.3 is derived from tests (Kulak et al., 1987; pp. 112-116) that showed that the total elongation, including local bearing deformation, of a standard hole that is loaded to obtain the ultimate strength equal to $3d_btF_u$ in Equation 5.4 was on the order of the diameter of the bolt.

This apparent hole elongation results largely from bearing deformation of the material that is immediately adjacent to the bolt. The lower value of $2.4d_btF_u$ in Equation 5.3 provides a bearing strength limit-state that is attainable at reasonable deformation (¼ in.). Strength and deformation limits were thus used to jointly evaluate bearing strength test results for design.

When long-slotted holes are oriented with the long dimension perpendicular to the direction of load, the bending component of the deformation in the material between adjacent holes or between the hole and the edge of the plate is increased. The nominal bearing strength is limited to $2d_btF_u$, which again provides a bearing strength limit-state that is attainable at reasonable deformation.

The design bearing strength has been expressed as that of a single bolt, although it is really that of the connected material that is immediately adjacent to the bolt. In calculating the design bearing strength of a connected part, the total bearing strength of the connected part can be taken as the sum of the bearing strengths of the individual bolts.

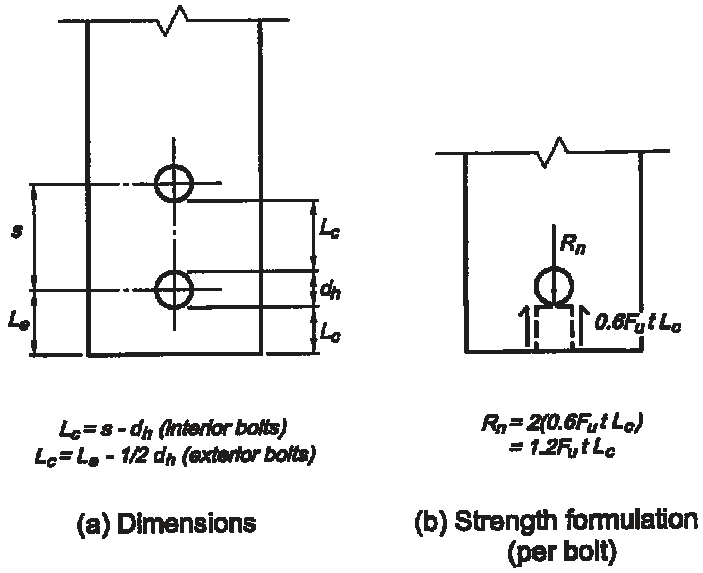

Figure. C-5.1. Bearing strength formulation.

5.4. Design Slip Resistance

5.4.1. At the Factored-Load Level: The design slip resistance is ϕR_n, where ϕ is as defined below and:

$$R_n = \mu D_u T_m N_b \left(1 - \frac{T_u}{D_u T_m N_b}\right) \qquad \text{(Equation 5.6)}$$

where

ϕ = 1.0 for standard holes
= 0.85 for oversized and short-slotted holes
= 0.70 for long-slotted holes perpendicular to the direction of load
= 0.60 for long-slotted holes parallel to the direction of load;

R_n = *nominal strength* (slip resistance) of a slip plane, kips;

μ = *mean slip coefficient* for Class A, B or C *faying surfaces*, as applicable, or as established by testing in accordance with Appendix A (see Section 3.2.2(b))
= 0.33 for Class A *faying surfaces* (uncoated clean mill scale steel surfaces or surfaces with Class A coatings on blast-cleaned steel)
= 0.50 for Class B surfaces (uncoated blast-cleaned steel surfaces or surfaces with Class B coatings on blast-cleaned steel)

= 0.35 for Class C surfaces (roughened hot-dip galvanized surfaces);

D_u = 1.13, a multiplier that reflects the ratio of the mean installed bolt pretension to the specified minimum bolt pretension T_m; the use of other values of D_u shall be approved by the *Engineer of Record;*

T_m = specified minimum bolt pretension (for *pretensioned joints* as specified in Table 8.1), kips;

N_b = number of bolts in the *joint*; and,

T_u = *required strength* in tension (tensile component of applied factored load for combined shear and tension loading), kips

= zero if the *joint* is subject to shear only

5.4.2. At the Service-Load Level: The service-load slip resistance is ϕR_s, where ϕ is as defined in Section 5.4.1 and:

$$R_n = \mu D T_m N_b \left(1 - \frac{T}{D T_m N_b}\right) \qquad \text{(Equation 5.7)}$$

where

D = 0.80, a slip probability factor that reflects the distribution of actual slip coefficient values about the mean, the ratio of mean installed bolt pretension to the specified minimum bolt pretension, T_m, and a slip probability level; the use of other values of D must be approved by the *Engineer of Record*; and,

T = applied service load in tension (tensile component of applied service load for combined shear and tension loading), kips

= zero if the *joint* is subject to shear only

and all other variables are as defined for Equation 5.6.

Commentary:

The design check for slip resistance can be made either at the factored-load level (Section 5.4.1) or at the service-load level (Section 5.4.2). These alternatives are based upon different design philosophies, which are discussed below. They have been calibrated to produce results that are essentially the same. The factored-load level approach is provided for the expedience of only working with factored loads. Irrespective of the approach, the limit state is based upon the prevention of slip at service-load levels.

If the factored-load provision is used, the *nominal strength* R_n represents the mean resistance, which is a function of the *mean slip coefficient* μ and the specified minimum bolt pretension (clamping force) T_m. The 1.13 multiplier in Equation 5.6 accounts for the expected 13 percent higher mean value of the installed bolt pretension provided by the calibrated wrench pretensioning method compared to the specified

minimum bolt pretension T_m used in the calculation. In the absence of other field test data, this value is used for all methods.

If the service-load approach is used, a probability of slip is identified. It implies that there is 90 percent reliability that slip will not occur at the calculated slip load if the calibrated wrench pretensioning method is used, or that there is 95 percent reliability that slip will not occur at the calculated slip load if the turn-of-nut pretensioning method is used. The probability of loading occurrence was not considered in developing these slip probabilities (Kulak et al., 1987; p. 135).

For most applications, the assumption that the slip resistance at each fastener is equal and additive with that at the other fasteners is based on the fact that all locations must develop the slip force before a total *joint* slip can occur at that plane. Similarly, the forces developed at various slip planes do not necessarily develop simultaneously, but one can assume that the full slip resistances must be mobilized at each plane before full *joint* slip can occur. Equations 5.6 and 5.7 are formulated for the general case of a single slip plane. The total slip resistance of a *joint* with multiple slip planes can be calculated as that for a single slip plane multiplied by the number of slip planes.

Only the *Engineer of Record* can determine whether the potential slippage of a *joint* is critical at the service-load level as a serviceability consideration only or whether slippage could result in distortions of the frame such that the ability of the frame to resist the factored loads would be reduced. The following comments reflect the collective thinking of the Council and are provided as guidance and an indication of the intent of the Specification (see also the Commentary to Sections 4.2 and 4.3):

(1) If *joints* with standard holes have only one or two bolts in the direction of the applied load, a small slip may occur. In this case, *joints* subject to vibration should be proportioned to resist slip at the service-load level;

(2) In built-up compression members, such as double-angle struts in trusses, a small relative slip between the elements especially at the end *connections* can increase the effective length of the combined cross-section to that of the individual components and significantly reduce the compressive strength of the strut. Therefore, the *connection* between the elements at the ends of built-up members should be checked at the factored-load level, whether or not a *slip-critical joint* is required for serviceability. As given by Sherman and Yura (1998), the required slip resistance is $0.008P_uLQ/I$, where P_u is the axial compressive force in the built-up member, kips, L is the total length of the built-up member, in., Q is the first moment of area of one component about the axis of buckling of the built-up member, in.^{3}, and I is the moment of inertia of the built-up member about the axis of buckling, in.^{4};

(3) In *joints* with long-slotted holes that are parallel to the direction of the applied load, the designer has two alternatives. The *joint* can be designed to prevent slip in the service-load range using either the factored-load-level provision in Section 5.4.1 or the service-load-level provision in Section 5.4.2. In either case, however, the effect of the factored loads acting on the deformed structure (deformed by the maximum amount of slip in the long slots at all locations) must be included in the structural analysis; and,

(4) In *joints* subject to fatigue, design should be based upon service-load criteria and the design slip resistance of Section 5.4.2 because fatigue is a function of the service load performance rather than that of the factored load.

Extensive data developed through research sponsored by the Council and others during the past twenty years has been statistically analyzed to provide improved information on slip probability of *joints* in which the bolts have been pretensioned to the requirements of Table 8.1. Two variables, the *mean slip coefficient* of the *faying surfaces* and the bolt pretension, were found to affect the slip resistance of *joints*. Field studies (Kulak and Birkemoe, 1993) of installed bolts in various structural applications indicate that the Table 8.1 pretensions have been achieved as anticipated in the laboratory research.

An examination of the slip-coefficient data for a wide range of surface conditions indicates that the data are distributed normally and the standard deviation is essentially the same for each surface condition class. This means that different reduction factors should be applied to classes of surfaces with different *mean slip coefficients*—the smaller the mean value of the coefficient of friction, the smaller (more severe) the appropriate reduction factor—to provide equivalent reliability of slip resistance.

The bolt clamping force data indicate that bolt pretensions are distributed normally for each pretensioning method. However, the data also indicate that the mean value of the bolt pretension is different for each method. As noted previously, if the calibrated wrench method is used to pretension ASTM A325 bolts, the mean value of bolt pretension is about 1.13 times the specified minimum pretension in Table 8.1. If the turn-of-nut pretensioning method is used, the mean pretension is about 1.35 times the specified minimum pretension for ASTM A325 bolts and about 1.26 for ASTM A490 bolts.

The combined effects of the variability of the *mean slip coefficient* and bolt pretension have been accounted for approximately in the single value of the slip probability factor D in the equation for nominal slip resistance in Section 5.4.2. This implies 90 percent reliability that slip will not occur if the calibrated wrench pretensioning method is used and 95 percent reliability if the turn-of-nut pretensioning method is used. For values of D that are appropriate for other *mean slip coefficients* and slip probabilities, refer to the *Guide* (Kulak et al., 1987; p. 135). The values given therein are suitable for direct substitution into the formula for slip resistance in Section 5.4.2.

The calibrated wrench installation method targets a specific bolt pretension, which is 5 percent greater than the specified minimum value given in Table 8.1. Thus, regardless of the actual strength of production bolts, this target value is unique for a given fastener grade. On the other hand, the turn-of-nut installation method imposes an elongation on the fastener. Consequently, the inherent strength of the bolts being installed will be reflected in the resulting pretension because this elongation will bring the fastener to its proportional limit under combined torsion and tension. As a result of these differences, the mean value and nature of the frequency distribution of pretensions for the two installation methods differ. Turn-of-nut installations result in higher mean levels

of pretension than do calibrated wrench installations. These differences were taken into account when the design criteria for *slip-critical joints* were developed.

Statistical information on the pretension characteristics of bolts installed in the field using direct tension indicators and twist-off-type tension-control bolts is limited.

In any of the foregoing installation methods, it can be expected that a portion of the bolt assembly (the threaded portion of the bolt within the *grip* length and/or the engaged threads of the nut and bolt) will reach the inelastic region of behavior. This permanent distortion has no undesirable effect on the subsequent performance of the bolt.

Because of the greater likelihood that significant deformation can occur in *joints* with oversized or slotted holes, lower values of design slip resistance are provided for *joints* with these hole types through a modification of the resistance factor ϕ. For the case of long-slotted holes, even though the slip load is the same for loading transverse or parallel to the axis of the slot, the value for loading parallel to the axis has been further reduced, based upon judgment, in recognition of the greater consequences of slip.

Although the design philosophy for *slip-critical joints* presumes that they do not slip into bearing when subject to loads in the service range, it is mandatory that *slip-critical joints* also meet the requirements of Sections 5.1, 5.2 and 5.3. Thus, they must meet the strength requirements to resist the factored loads as *shear/bearing joints*.

Section 3.2.2(b) permits the *Engineer of Record* to authorize the use of *faying surfaces* with a *mean slip coefficient* μ that is less than 0.50 (Class B) and other than 0.33 (Class A). This authorization requires that the following restrictions are met:

(1) The *mean slip coefficient* μ must be determined in accordance with Appendix A; and,
(2) The appropriate slip probability factor *D* must be selected from the *Guide* (Kulak et al., 1987) for design at the service-load level.

Prior to the 1994 edition of this Specification, μ for Class C surfaces was taken as 0.40. This value was reduced to 0.35 in the 1994 edition for better agreement with the available research (Kulak et al., 1987; pp. 78-82).

5.5. Tensile Fatigue

The tensile stress in the bolt that results from the cyclic application of externally applied service loads and the prying force, if any, but not the pretension, shall not exceed the stress in Table 5.2. The nominal diameter of the bolt shall be used in calculating the bolt stress. The connected parts shall be proportioned so that the calculated prying force does not exceed 30 percent of the externally applied load. *Joints* that are subject to tensile fatigue loading shall be specified as pretensioned in accordance with Section 4.2 or slip-critical in accordance with Section 4.3.

Table 5.2. Maximum Tensile Stress for Fatigue Loading

Number of Cycles	Maximum Bolt Stress for Design at Service Loads [a], ksi	
	ASTM A325 or F1852	ASTM A490 or F2280
Not more than 20,000	45	57
From 20,000 to 500,000	40	49
More than 500,000	31	38

[a] Including the effects of *prying action*, if any, but excluding the pretension.

Commentary:
As described in the Commentary to Section 5.1, *high-strength bolts* in *pretensioned joints* that are nominally loaded in tension will experience little, if any, increase in axial stress under service loads. For this reason, pretensioned bolts are not adversely affected by repeated application of service-load tensile stress. However, care must be taken to ensure that the calculated prying force is a relatively small part of the total applied bolt tension (Kulak et al., 1987; p. 272). The provisions that cover bolt fatigue in tension are based upon research results where various single-bolt assemblies and *joints* with bolts in tension were subjected to repeated external loads that produced fatigue failure of the pretensioned fasteners. A limited range of prying effects was investigated in this research.

SECTION 6. USE OF WASHERS

6.1. Snug-Tightened Joints

Washers are not required in snug-tightened joints, except as required in Sections 6.1.1 and 6.1.2.

6.1.1. Sloping Surfaces: When the outer face of the *joint* has a slope that is greater than 1:20 with respect to a plane that is normal to the bolt axis, an ASTM F436 beveled washer shall be used to compensate for the lack of parallelism.

6.1.2. Slotted Hole: When a slotted hole occurs in an outer ply, an ASTM F436 washer or 5⁄16 in. thick common plate washer shall be used as required to completely cover the hole.

6.2. Pretensioned Joints and Slip-Critical Joints

Washers are not required in *pretensioned joints* and *slip-critical joints*, except as required in Sections 6.1.1, 6.1.2, 6.2.1, 6.2.2, 6.2.3, 6.2.4 and 6.2.5.

6.2.1. Specified Minimum Yield Strength of Connected Material Less Than 40 ksi: When ASTM A490 or F2280 bolts are pretensioned in connected material of specified minimum yield strength less than 40 ksi, ASTM F436 washers shall be used under both the bolt head and nut, except that a washer is not needed under the head of an ASTM F2280 round head twist-off bolt.

6.2.2. Calibrated Wrench Pretensioning: When the calibrated wrench pretensioning method is used, an ASTM F436 washer shall be used under the turned element.

6.2.3. Twist-Off-Type Tension-Control Bolt Pretensioning: When the twist-off-type tension-control bolt pretensioning method is used, an ASTM F436 washer shall be used under the nut as part of the *fastener assembly*.

6.2.4. Direct-Tension-Indicator Pretensioning: When the direct-tension-indicator pretensioning method is used, an ASTM F436 washer shall be used as follows:

(1) When the nut is turned and the direct tension indicator is located under the bolt head, an ASTM F436 washer shall be used under the nut;
(2) When the nut is turned and the direct tension indicator is located under the nut, an ASTM F436 washer shall be used between the nut and the direct tension indicator;
(3) When the bolt head is turned and the direct tension indicator is located under the nut, an ASTM F436 washer shall be used under the bolt head; and,

Table 6.1. Washer Requirements for Pretensioned and Slip-Critical Bolted *Joints* with Oversized and Slotted Holes in the Outer Ply

ASTM Designation	Nominal Bolt Diameter, d_b, in.	Hole Type in Outer Ply		
		Oversized	Short-Slotted	Long-Slotted
A325 or F1852	½ - 1½	ASTM F436 [a]		5/16 in. thick plate washer or continuous bar [b,c]
A490 or F2280	≤ 1			
	> 1	ASTM F436 with 5/16 in. thickness [a,b,d]		ASTM F436 washer with either a 3/8 in. thick plate washer or continuous bar [b,c]

[a] This requirement shall not apply to heads of round head tension-control bolt assemblies that meet the requirements in Section 2.7 and provide a bearing circle diameter that meets the requirements of ASTM F1852 or F2280.

[b] Multiple washers with a combined thickness of 5/16 in. or larger do not satisfy this requirement.

[c] The plate washer or bar shall be of structural-grade steel material, but need not be hardened.

[d] Alternatively, a 3/8 in. thick plate washer and an ordinary thickness F436 washer may be used. The plate washer need not be hardened.

(4) When the bolt head is turned and the direct tension indicator is located under the bolt head, an ASTM F436 washer shall be used between the bolt head and the direct tension indicator.

6.2.5. Oversized or Slotted Hole: When an oversized or slotted hole occurs in an outer ply, the washer requirements shall be as given in Table 6.1. The washer used shall be of sufficient size to completely cover the hole.

Commentary:
It is important that shop drawings and *connection* details clearly reflect the number and disposition of washers when they are required, especially the thick hardened washers or plate washers that are required for some slotted hole applications. The total thickness of washers in the *grip* affects the length of bolt that must be supplied and used.

The primary function of washers is to provide a hardened non-galling surface under the turned element, particularly for torque-based pretensioning methods such as the calibrated wrench pretensioning method and twist-off-type tension-control bolt pretensioning method. Circular flat washers that meet the requirements of ASTM F436 provide both a hardened non-galling surface and an increase in bearing area that is approximately 50 percent larger than that provided by a heavy-hex bolt head or nut.

However, tests have shown that washers of the standard 5⁄32 in. thickness have a minor influence on the pressure distribution of the induced bolt pretension. Furthermore, they showed that a larger thickness is required when ASTM A490 bolts are used with material that has a minimum specified yield strength that is less than 40 ksi. This is necessary to mitigate the effects of local yielding of the material in the vicinity of the contact area of the head and nut. The requirement for standard thickness hardened washers, when such washers are specified, is waived for alternative design fasteners that incorporate a bearing surface under the head of the same diameter as the hardened washer.

Heat-treated washers not less than 5⁄16 in. thick are required to cover oversized and short-slotted holes in external plies, when ASTM A490 or F2280 bolts of diameter larger than 1 in. are used, except per Table 6.1 footnote d. This was found necessary to distribute the high clamping pressure so as to prevent collapse of the hole perimeter and enable the development of the desired clamping force. Preliminary investigation has shown that a similar but less severe deformation occurs when oversized or slotted holes are in the interior plies. The reduction in clamping force may be offset by "keying," which tends to increase the resistance to slip. These effects are accentuated in *joints* of thin plies. When long-slotted holes occur in an outer ply, 3⁄8 in. thick plate washers or continuous bars and one ASTM F436 washer are required in Table 6.1. This requirement can be satisfied with material of any structural grade. Alternatively, either of the following options can be used:

(1) The use of material with F_y greater than 40 ksi will eliminate the need to also provide ASTM F436 washers in accordance with the requirements in Section 6.2.1 for ASTM A490 or F2280 bolts of any diameter; or,
(2) Material with F_y equal to or less than 40 ksi can be used with ASTM F436 washers in accordance with the requirements in Section 6.2.1.

This specification previously required a washer under bolt heads with a bearing area smaller than that provided by an ASTM F436 washer. Tests indicate that the pretension achieved with a bolt having the minimum ASTM F1852 or F2280 bearing circle diameter is the same as that of a bolt with the larger bearing circle diameter equal to the size of an ASTM F436 washer, provided that the hole size meets the RCSC Specification limitations (Schnupp, 2003).

SECTION 7. PRE-INSTALLATION VERIFICATION

The requirements in this Section shall apply only as indicated in Section 8.2 to verify that the *fastener assemblies* and pretensioned installation procedures perform as required prior to installation.

7.1. Tension Calibrator

A *tension calibrator* shall be used where bolts are to be installed in *pretensioned joints* and *slip-critical joints* to:

(1) Confirm the suitability of the complete *fastener assembly*, including lubrication, for pretensioned installation; and,
(2) Confirm the procedure and proper use by the bolting crew of the pretensioning method to be used.

The accuracy of a hydraulic *tension calibrator* shall be confirmed through calibration at least annually.

Commentary:
A *tension calibrator* is a device that indicates the pretension that is developed in a bolt. It must be readily available whenever *high-strength bolts* are to be pretensioned. A bolt *tension calibrator* is essential for:

(1) The pre-installation verification of the suitability of the *fastener assembly*, including the lubrication that is applied by the *manufacturer* or specially applied, to develop the specified minimum pretension;
(2) Verifying the adequacy and proper use of the specified pretensioning method to be used;
(3) Determining the installation torque for the calibrated wrench pretensioning method; and,
(4) Determining an arbitration torque as specified in Section 10, if required to resolve dispute.

Hydraulic *tension calibrators* undergo a slight deformation during bolt pretensioning. Hence, when bolts are pretensioned according to Section 8.2.1, the nut rotation corresponding to a given pretension reading may be somewhat larger than it would be if the same bolt were pretensioned in a solid steel assembly. Stated differently, the reading of a hydraulic *tension calibrator* tends to underestimate the pretension that a given rotation of the turned element would induce in a bolt in a *pretensioned joint*.

Direct tension indicators (DTIs) may be used as tension calibrators, except in the case of turn-of-nut installation. This method is especially useful for, but not restricted to, bolts that are too short to fit into a hydraulic *tension calibrator*. The DTIs to be used for verification testing must first have the

Table 7.1 Minimum Bolt Pretension for Pre-Installation Verification

Nominal Bolt Diameter, d_b, in.	Minimum Bolt Pretension for Pre-Installation Verification, kips [a]	
	ASTM A325 and F1852	ASTM A490 and F2280
½	13	16
⅝	20	25
¾	29	37
⅞	41	51
1	54	67
1⅛	59	84
1¼	75	107
1⅜	89	127
1½	108	155

[a] Equal to 1.05 times the specified minimum bolt pretension required in Table 8.1, rounded to the nearest kip.

average gap determined for the specific level of pretension required by Table 7.1, measured to the nearest 0.001 in. This is termed the "calibrated gap." Such measurements should be made for each lot of DTIs being used for verification testing, termed the "verification lot." The fastener assembly may then be installed in a standard size hole with the additional verification DTI. The prescribed pretensioning procedure is followed, and it is verified that the average gap in the verification DTI is equal to or less than the calibrated gap for the verification lot. For calibrated wrench installation, the verification DTI should be placed at the fastener end opposite the installation wrench. For twist-off bolt installation, the verification DTI must be placed beneath the bolt head, with an additional ASTM F436 washer between bolt head and verification DTI, and the bolt head is not permitted to turn. For DTI installation, the verification DTI must be placed at the end opposite the placement of the production DTI.

This technique cannot be used for the turn-of-nut method because the deformation of the DTI consumes a portion of the turns provided. For turn-of-nut pre-installation verification of bolts too short to fit into a hydraulic calibration device, installing the fastener assembly in a solid plate with the proper size hole and applying the required turns is adequate. No verification is required for achieved pretension to meet Table 7.1.

7.2. Required Testing

A representative sample of not fewer than three complete *fastener assemblies* of each combination of diameter, length, grade and *lot* to be used in the work shall be checked at the site of installation in a *tension calibrator* to verify that the pretensioning method develops a pretension that is equal to or greater than that specified in Table 7.1. Washers shall be used in the pre-installation verification assemblies as required in the work in accordance with the requirements in Section 6.2.

If the actual pretension developed in any of the *fastener assemblies* is less than that specified in Table 7.1, the cause(s) shall be determined and resolved before the *fastener assemblies* are used in the work. Cleaning, lubrication and retesting of these *fastener assemblies*, except ASTM F1852 or F2280 twist-off-type tension-control bolt assemblies, (see Section 2.2) are permitted, provided that all assemblies are treated in the same manner.

Impact wrenches, if used, shall be of adequate capacity and supplied with sufficient air to perform the required pretensioning of each bolt within approximately 10 seconds for bolts to 1¼-in. diameter, and within approximately 15 seconds for larger bolts.

Commentary:

The fastener components listed in Section 1.3 are manufactured under separate ASTM specifications, each of which includes tolerances that are appropriate for the individual component covered. While these tolerances are intended to provide for a reasonable and workable fit between the components when used in an assembly, the cumulative effect of the individual tolerances permits a significant variation in the installation characteristics of the complete *fastener assembly*. It is the intent in this Specification that the responsibility rests with the *supplier* for proper performance of the *fastener assembly*, the components of which may have been produced by more than one *manufacturer*.

When pretensioned installation is required, it is essential that the effects of the accumulation of tolerances, surface condition and lubrication be taken into account. Hence, pre-installation verification testing of the complete *fastener assembly* is required as indicated in Section 8 to ensure that the *fastener assemblies* and installation method to be used in the work will provide a pretension that exceeds those specified in Table 8.1. It is not, however, intended simply to verify conformance with the individual ASTM specifications.

It is recognized in this Specification that a natural scatter is found in the results of the pre-installation verification testing that is required in Section 8. Furthermore, it is recognized that the pretensions developed in tests of a representative sample of the fastener components that will be installed in the work must be slightly higher to provide confidence that the majority of *fastener assemblies* will achieve the minimum required pretension as given in Table 8.1. Accordingly, the minimum pretension to be used in pre-installation verification

is 1.05 times that required for installation and inspection, rounded to the nearest kip.

Pre-installation verification testing of as-received bolts and nuts is also a requirement in this Specification because of instances of under-strength and counterfeit bolts and nuts. Pre-installation verification testing provides a practical means for ensuring that non-conforming *fastener assemblies* are not incorporated into the work. Experience on many projects has shown that bolts and/or nuts not meeting the requirements of the applicable ASTM Specification would have been identified prior to installation if they had been tested as an assembly in a *tension calibrator*. The expense of replacing bolts installed in the structure when the non-conforming bolts were discovered at a later date would have been avoided.

Additionally, pre-installation verification testing clarifies for the bolting crew and the *inspector* the proper implementation of the selected pretensioning method and the adequacy of the installation equipment. It will also identify potential sources of problems, such as the need for lubrication to prevent failure of bolts by combined high torque with tension, under-strength assemblies resulting from excessive over-tapping of hot-dip galvanized nuts or other failures to meet strength or geometry requirements of applicable ASTM specifications.

The pre-installation verification requirements in this Section presume that *fastener assemblies* so verified will be pretensioned before the condition of the *fastener assemblies*, the equipment and the steelwork have changed significantly. Research by Kulak and Undershute (1998) on twist-off-type tension-control bolt assemblies from various *manufacturers* showed that installed pretensions could be a function of the time and environmental conditions of storage and exposure. The reduced performance of these bolts was caused by a deterioration of the lubricity of the assemblies. Furthermore, all bolt pretensioning that is achieved through rotation of the nut (or the head) is affected by the presence of torque, the excess of which has been demonstrated to adversely affect the development of the desired pretension. Thus, it is required that the condition of the *fastener assemblies* must be replicated in pre-installation verification. When time of exposure between the placement of *fastener assemblies* in the field work and the subsequent pretensioning of those *fastener assemblies* is of concern, pre-installation verification can be performed on *fastener assemblies* removed from the work or on extra *fastener assemblies* that, at the time of placement, were set aside to experience the same degree of exposure.

SECTION 8. INSTALLATION

Prior to installation, the fastener components shall be stored in accordance with Section 2.2. For *joints* that are designated in the contract documents as *snug-tightened joints*, the bolts shall be installed in accordance with Section 8.1. For *joints* that are designated in the contract documents as pretensioned or slip-critical, the bolts shall be installed in accordance with Section 8.2.

8.1. Snug-Tightened Joints

All bolt holes shall be aligned to permit insertion of the bolts without undue damage to the threads. Bolts shall be placed in all holes with washers positioned as required in Section 6.1 and nuts threaded to complete the assembly. Compacting the *joint* to the snug-tight condition shall progress systematically from the most rigid part of the *joint*. Snug tight is the condition that exists when all of the plies in a *connection* have been pulled into *firm contact* by the bolts in the *joint* and all of the bolts in the *joint* have been tightened sufficiently to prevent the removal of the nuts without the use of a wrench.

Commentary:

As discussed in the Commentary to Section 4, the bolted *joints* in most shear *connections* and in many tension *connections* can be specified as *snug-tightened joints*. The snug tightened condition is typically achieved with a few impacts of an impact wrench, application of an electric torque wrench until the wrench begins to slow or the full effort of a worker on an ordinary spud wrench. More than one cycle through the bolt pattern may be required to achieve the *snug-tightened joint*.

The actual pretensions that result in individual fasteners in *snug-tightened joints* will vary from *joint* to *joint* depending upon the thickness, flatness, and degree of parallelism of the connected plies, as well as the effort applied. In most *joints*, plies of *joints* involving material of ordinary thickness and flatness can be drawn into complete contact at relatively low levels of pretension. However, in some *joints* in thick material or in material with large burrs, it may not be possible to reach continuous contact throughout the *faying surface* area as is commonly achieved in *joints* of thinner plates. This is generally not detrimental to the performance of the *joint*.

As used in Section 8.1, the term “undue damage” is intended to mean damage that would be sufficient to render the product unfit for its intended use.

8.2. Pretensioned Joints and Slip-Critical Joints

One of the pretensioning methods in Sections 8.2.1 through 8.2.4 shall be used, except when alternative-design fasteners that meet the requirements of Section 2.8 or alternative washer-type indicating devices that meet the requirements of Section 2.6.2 are used, in which case, installation instructions provided by the *manufacturer* and approved by the *Engineer of Record* shall be followed.

Table 8.1. Minimum Bolt Pretension, *Pretensioned* and *Slip-Critical Joints*

Nominal Bolt Diameter, d_b, in.	Specified Minimum Bolt Pretension, T_m, kips [a]	
	ASTM A325 and F1852	ASTM A490 and F2280
½	12	15
⅝	19	24
¾	28	35
⅞	39	49
1	51	64
1⅛	56	80
1¼	71	102
1⅜	85	121
1½	103	148

[a] Equal to 70 percent of the specified minimum tensile strength of bolts as specified in ASTM Specifications for tests of full-size ASTM A325 and A490 bolts with UNC threads loaded in axial tension, rounded to the nearest kip.

When it is impractical to turn the nut, pretensioning by turning the bolt head is permitted while rotation of the nut is prevented, provided that the washer requirements in Section 6.2 are met. A pretension that is equal to or greater than the value in Table 8.1 shall be provided. The pre-installation verification procedures specified in Section 7 shall be performed using *fastener assemblies* that are representative of the condition of those that will be pretensioned in the work.

Pre-installation testing shall be performed for each fastener assembly lot prior to the use of that assembly lot in the work. The testing shall be done at the start of the work. For calibrated wrench pretensioning, this testing shall be performed daily for the calibration of the installation wrench.

Commentary:
The minimum pretension for ASTM A325 and A490 bolts is equal to 70 percent of the specified minimum tensile strength. As tabulated in Table 8.1, the values have been rounded to the nearest kip.

Four pretensioning methods are provided without preference in this Specification. Each method may be relied upon to provide satisfactory results when conscientiously implemented with the specified *fastener assembly*

components in good condition. However, it must be recognized that misuse or abuse is possible with any method. With all methods, it is important to first install bolts in all holes of the *joint* and to compact the *joint* until the connected plies are in *firm contact*. Only after completion of this operation can the *joint* be reliably pretensioned. Both the initial phase of compacting the *joint* and the subsequent phase of pretensioning should begin at the most rigidly fixed or stiffest point.

In some *joints* in thick material, it may not be possible to reach continuous contact throughout the *faying surface* area, as is commonly achieved in *joints* of thinner plates. This is not detrimental to the performance of the *joint*. If the specified pretension is present in all bolts of the completed *joint*, the clamping force, which is equal to the total of the pretensions in all bolts, will be transferred at the locations that are in contact and the *joint* will be fully effective in resisting slip through friction.

If individual bolts are pretensioned in a single continuous operation in a *joint* that has not first been properly compacted or fitted up, the pretension in the bolts that are pretensioned first may be relaxed or removed by the pretensioning of adjacent bolts. The resulting reduction in total clamping force will reduce the slip resistance.

In the case of hot-dip galvanized coatings, especially if the *joint* consists of many plies of thickly coated material, relaxation of bolt pretension may be significant and re-pretensioning of the bolts may be required subsequent to the initial pretensioning. Munse (1967) showed that a loss of pretension of approximately 6.5 percent occurred for galvanized plates and bolts due to relaxation as compared with 2.5 percent for uncoated *joints*. This loss of bolt pretension occurred in five days; loss recorded thereafter was negligible. Either this loss can be allowed for in design, or pretension may be brought back to the prescribed level by re-pretensioning the bolts after an initial period of "settling-in."

As stated in the *Guide* (Kulak et al 1987; p. 61), "…it seems reasonable to expect an increase in bolt force relaxation as the *grip* length is decreased. Similarly, increasing the number of plies for a constant *grip* length might also lead to an increase in bolt relaxation."

8.2.1. Turn-of-Nut Pretensioning: All bolts shall be installed in accordance with the requirements in Section 8.1, with washers positioned as required in Section 6.2. Subsequently, the nut or head rotation specified in Table 8.2 shall be applied to all *fastener assemblies* in the *joint*, progressing systematically from the most rigid part of the *joint* in a manner that will minimize relaxation of previously pretensioned bolts. The part not turned by the wrench shall be prevented from rotating during this operation. Upon completion of the application of the required nut rotation for pretensioning, it is not permitted to turn the nut in the loosening direction except for the purpose of complete removal of the individual

Table 8.2. Nut Rotation from Snug-Tight Condition for Turn-of-Nut Pretensioning [a,b]

Bolt Length [c]	Disposition of Outer Faces of Bolted Parts		
	Both faces normal to bolt axis	One face normal to bolt axis, other sloped not more than 1:20 [d]	Both faces sloped not more than 1:20 from normal to bolt axis [d]
Not more than $4d_b$	⅓ turn	½ turn	⅔ turn
More than $4d_b$ but not more than $8d_b$	½ turn	⅔ turn	⅚ turn
More than $8d_b$ but not more than $12d_b$	⅔ turn	⅚ turn	1 turn

[a] Nut rotation is relative to bolt regardless of the element (nut or bolt) being turned. For required nut rotations of ½ turn and less, the tolerance is plus or minus 30 degrees; for required nut rotations of ⅔ turn and more, the tolerance is plus or minus 45 degrees.

[b] Applicable only to *joints* in which all material within the *grip* is steel.

[c] When the bolt length exceeds $12d_b$, the required nut rotation shall be determined by actual testing in a suitable *tension calibrator* that simulates the conditions of solidly fitting steel.

[d] Beveled washer not used.

fastener assembly. Such fastener assemblies shall not be reused except as permitted in Section 2.3.3.

Commentary:

The turn-of-nut pretensioning method results in more uniform bolt pretensions than is generally provided with torque-controlled pretensioning methods. Strain-control that reaches the inelastic region of bolt behavior is inherently more reliable than a method that is dependent upon torque control. However, proper implementation is dependent upon ensuring that the *joint* is properly compacted prior to application of the required partial turn and that the bolt head (or nut) is securely held when the nut (or bolt head) is being turned.

Match-marking of the nut and protruding end of the bolt after snug-tightening can be helpful in the subsequent installation process and is certainly an aid to inspection.

As indicated in Table 8.2, there is no available research that establishes the required nut rotation for bolt lengths exceeding $12d_b$. The required turn for such bolts can be established on a case-by-case basis using a *tension calibrator*.

8.2.2. Calibrated Wrench Pretensioning: The pre-installation verification procedures specified in Section 7 shall be performed daily for the calibration of the installation wrench. Torque values determined from tables or from equations that claim to relate torque to pretension without verification shall not be used.

All bolts shall be installed in accordance with the requirements in Section 8.1, with washers positioned as required in Section 6.2. Subsequently, the installation torque determined in the pre-installation verification of the *fastener assembly* (Section 7) shall be applied to all bolts in the *joint*, progressing systematically from the most rigid part of the *joint* in a manner that will minimize relaxation of previously pretensioned bolts. The part not turned by the wrench shall be prevented from rotating during this operation. Application of the installation torque need not produce a relative rotation between the bolt and nut that is greater than the rotation specified in Table 8.2.

Commentary:
The scatter in installed pretension can be significant when torque-controlled methods of installation are used. The variables that affect the relationship between torque and pretension include:

(1) The finish and tolerance on the bolt and nut threads;
(2) The uniformity, degree and condition of lubrication;
(3) The shop or job-site conditions that contribute to dust and dirt or corrosion on the threads;
(4) The friction that exists to a varying degree between the turned element (the nut face or bearing area of the bolt head) and the supporting surface;
(5) The variability of the air supply parameters on impact wrenches that results from the length of air lines or number of wrenches operating from the same source;
(6) The condition, lubrication and power supply for the torque wrench, which may change within a work shift; and,
(7) The repeatability of the performance of any wrench that senses or responds to the level of the applied torque.

In the first edition of this Specification, which was published in 1951, a table of torque-to-pretension relationships for bolts of various diameters was included. It was soon demonstrated in research that a variation in the torque-to-pretension of as high as ±40 percent must be anticipated unless the relationship is established individually for each bolt *lot*, diameter, and fastener condition. Hence, in the 1954 edition of this Specification, recognition of relationships between torque and pretension in the form of tabulated values or equations was withdrawn. Recognition of the calibrated wrench pretensioning method was retained however until 1980, but with the requirement that the torque required for installation be determined specifically for the bolts being installed on a daily basis. Recognition of the method was withdrawn in 1980

because of the continuing controversy that resulted from the failure of users to adhere to the requirements for the valid use of the method during both installation and inspection.

In the 1985 edition of this Specification, the calibrated wrench pretensioning method was reinstated, but with more emphasis on detailed requirements that must be carefully followed. For calibrated wrench pretensioning, wrenches must be calibrated:

(1) Daily;
(2) When the *lot* of any component of the *fastener assembly* is changed;
(3) When the *lot* of any component of the *fastener assembly* is relubricated;
(4) When significant differences are noted in the surface condition of the bolt threads, nuts or washers; or,
(5) When any major component of the wrench including lubrication, hose and air supply are altered.

It is also important that:

(1) Fastener components be protected from dirt and moisture at the shop or job site as required in Section 2;
(2) Washers be used as specified in Section 6; and,
(3) The time between removal from *protected storage* and wrench calibration and final pretensioning be minimal.

8.2.3. Twist-Off-Type Tension-Control Bolt Pretensioning: Twist-off-type tension-control bolt assemblies that meet the requirements of ASTM F1852 or F2280 shall be used.

All *fastener assemblies* shall be installed in accordance with the requirements in Section 8.1 without severing the splined end and with washers positioned as required in Section 6.2. If a splined end is severed during this operation, the *fastener assembly* shall be removed and replaced. Subsequently, all bolts in the *joint* shall be pretensioned with the twist-off-type tension-control bolt installation wrench, progressing systematically from the most rigid part of the *joint* in a manner that will minimize relaxation of previously pretensioned bolts.

Commentary:
ASTM F1852 and F2280 twist-off-type tension-control bolt assemblies have a splined end that extends beyond the threaded portion of the bolt. During installation, this splined end is gripped by a specially designed wrench chuck and provides a means for turning the nut relative to the bolt. This product is, in fact, based upon a torque-controlled installation method to which the *fastener assembly* variables affecting torque that were discussed in the

Commentary to Section 8.2.2 apply, except for wrench calibration, because torque is controlled within the *fastener assembly*.

Twist-off-type tension-control bolt assemblies must be used in the as-delivered, clean, lubricated condition as specified in Section 2. Adherence to the requirements in this Specification, especially those for storage, cleanliness and verification, is necessary for their proper use.

8.2.4. Direct-Tension-Indicator Pretensioning: Direct tension indicators that meet the requirements of ASTM F959 shall be used. The pre-installation verification procedures specified in Section 7 shall demonstrate that, when the pretension in the bolt reaches that required in Table 7.1, the gap is not less than the job inspection gap in accordance with ASTM F959.

All bolts shall be installed in accordance with the requirements in Section 8.1, with washers positioned as required in Section 6.2. The installer shall verify that the direct-tension-indicator protrusions have not been compressed to a gap that is less than the job inspection gap during this operation, and if this has occurred, the direct tension indicator shall be removed and replaced. Subsequently, all bolts in the *joint* shall be pretensioned, progressing systematically from the most rigid part of the *joint* in a manner that will minimize relaxation of previously pretensioned bolts. The installer shall verify that the direct tension indicator protrusions have been compressed to a gap that is less than the job inspection gap.

Commentary:

ASTM F959 direct tension indicators are recognized in this Specification as a bolt-tension-indicating device. Direct tension indicators are hardened, washer-shaped devices incorporating small arch-like protrusions on the bearing surface that are designed to deform in a controlled manner when subjected to compressive load.

During installation, care must be taken to ensure that the direct-tension-indicator arches are oriented to bear against the hardened bearing surface of the bolt head or nut, or against a hardened flat washer if used under turned element, whether that turned element is the nut or the bolt. Proper use and orientation is illustrated in Figure C-8.1.

In some cases, more than a single cycle of systematic partial pretensioning may be required to deform the direct-tension-indicator protrusions to the gap that is specified by the *manufacturer*. If the gaps fail to close or when the washer *lot* is changed, another verification procedure using the *tension calibrator* must be performed.

Provided the connected plies are in *firm contact*, partial compression of the direct tension indicator protrusions is commonly taken as an indication that the snug-tight condition has been achieved.

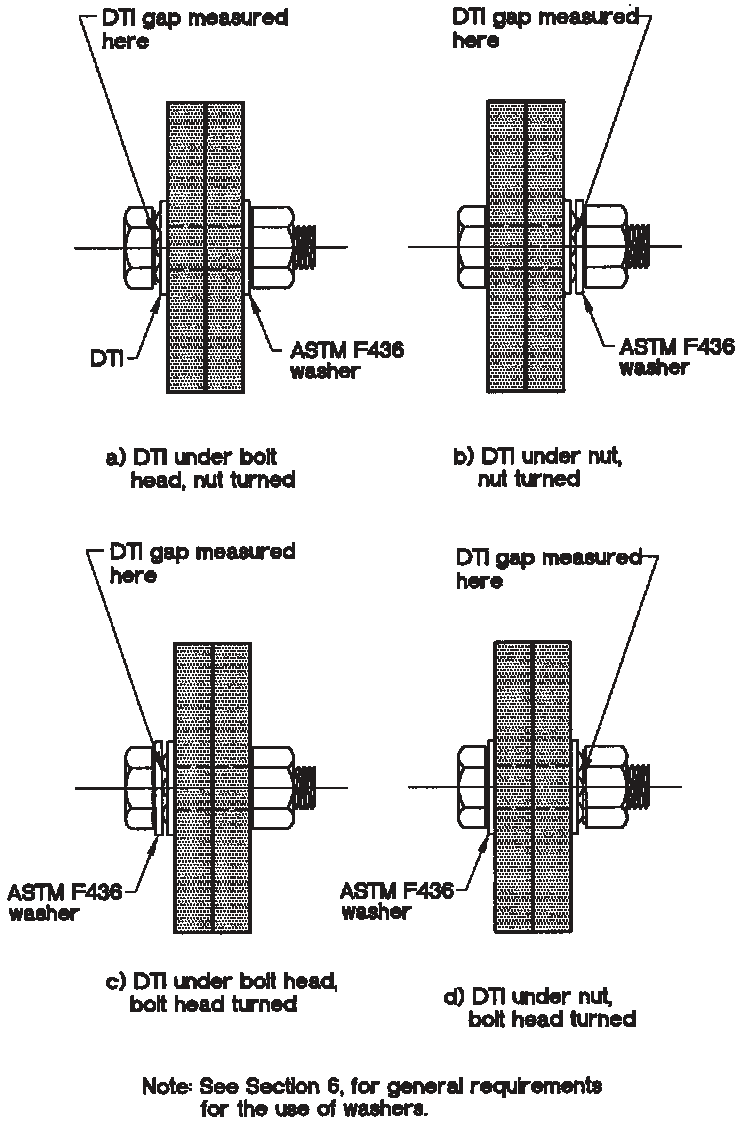

Figure C-8.1. Proper use and orientation of ASTM F959 direct-tension indicator

SECTION 9. INSPECTION

When inspection is required in the contract documents, the *inspector* shall ensure while the work is in progress that the requirements in this Specification are met. When inspection is not required in the contract documents, the *contractor* shall ensure while the work is in progress that the requirements in this Specification are met.

For *joints* that are designated in the contract documents as *snug-tightened joints*, the inspection shall be in accordance with Section 9.1. For *joints* that are designated in the contract documents as pretensioned, the inspection shall be in accordance with Section 9.2. For *joints* that are designated in the contract documents as slip-critical, the inspection shall be in accordance with Section 9.3.

9.1. Snug-Tightened Joints

Prior to the *start of work,* it shall be ensured that all fastener components to be used in the work meet the requirements in Section 2. Subsequently, it shall be ensured that all connected plies meet the requirements in Section 3.1 and all bolt holes meet the requirements in Sections 3.3 and 3.4. After the *connections* have been assembled, it shall be visually ensured that the plies of the connected elements have been brought into *firm contact* and that washers have been used as required in Section 6. It shall be determined that all of the bolts in the *joint* have been tightened sufficiently to prevent the turning of the nuts without the use of a wrench. No further evidence of conformity is required for *snug-tightened joints*. Where visual inspection indicates that the fastener may not have been sufficiently tightened to prevent the removal of the nut by hand, the inspector shall physically check for this condition for the fastener.

Commentary:
Inspection requirements for *snug-tightened joints* consist of verification that the proper fastener components were used, the connected elements were fabricated properly, the bolted *joint* was drawn into firm contact, and that the nuts could not be removed without the use of a wrench. Because pretension, beyond what is required to ensure that the nut cannot be removed from the bolt without the use of a wrench, is not required for the proper performance of a *snug-tightened joint*, the installed bolts should not be inspected to determine the actual installed pretension. Likewise, the arbitration procedures described in Section 10 are not applicable.

9.2. Pretensioned Joints

For *pretensioned joints*, the following inspection shall be performed in addition to that required in Section 9.1:

(1) When the turn-of-nut pretensioning method is used for installation, the inspection shall be in accordance with Section 9.2.1;

(2) When the calibrated wrench pretensioning method is used for installation, the inspection shall be in accordance with Section 9.2.2;
(3) When the twist-off-type tension-control bolt pretensioning method is used for installation, the inspection shall be in accordance with Section 9.2.3;
(4) When the direct-tension-indicator pretensioning method is used for installation, the inspection shall be in accordance with Section 9.2.4; and,
(5) When alternative-design fasteners that meet the requirements of Section 2.8 or alternative washer-type indicating devices that meet the requirements of Section 2.6.2 are used, the inspection shall be in accordance with inspection instructions provided by the *manufacturer* and approved by the *Engineer of Record*.

Commentary:
When *joints* are designated as pretensioned, they are not subject to the same faying-surface-treatment inspection requirements as is specified for *slip-critical joints* in Section 9.3.

9.2.1. Turn-of-Nut Pretensioning: The *inspector* shall observe the pre-installation verification testing required in Section 8.2.1. Subsequently, it shall be ensured by *routine observation* that the bolting crew properly rotates the turned element relative to the unturned element by the amount specified in Table 8.2. Alternatively, when *fastener assemblies* are match-marked after the initial fit-up of the *joint* but prior to pretensioning, visual inspection after pretensioning is permitted in lieu of routine observation. No further evidence of conformity is required. A pretension that is greater than the value specified in Table 8.1 shall not be cause for rejection.

Commentary:
Match-marking of the assembly during installation as discussed in the Commentary to Section 8.2.1 improves the ability to inspect bolts that have been pretensioned with the turn-of-nut pretensioning method. The sides of nuts and bolt heads that have been impacted sufficiently to induce the Table 8.1 minimum pretension will appear slightly peened.

The turn-of-nut pretensioning method, when properly applied and verified during the construction, provides more reliable installed pretensions than after-the-fact *inspection* testing. Therefore, proper inspection of the method is for the inspector to observe the required pre-installation verification testing of the *fastener assemblies* and the method to be used, followed by monitoring of the work in progress to ensure that the method is routinely and properly applied, or visual inspection of match-marked assemblies.

Some problems with the turn-of-nut pretensioning method have been encountered with hot-dip galvanized bolts. In some cases, the problems have been attributed to an especially effective lubricant applied by the *manufacturer* to ensure that bolts and nuts from stock will meet the ASTM

Specification requirements for minimum turns testing of galvanized fasteners. Job-site testing in the *tension calibrator* demonstrated that the lubricant reduced the coefficient of friction between the bolt and nut to the degree that "the full effort of an ironworker using an ordinary spud wrench" to snug-tighten the *joint* actually induced the full required pretension. Also, because the nuts could be removed with an ordinary spud wrench, they were erroneously judged by the *inspector* to be improperly pretensioned. Excessively lubricated *high-strength bolts* may require significantly less torque to induce the specified pretension. The required pre-installation verification will reveal this potential problem.

Conversely, the absence of lubrication or lack of proper over-tapping can cause seizing of the nut and bolt threads, which will result in a twist failure of the bolt at less than the specified pretension. For such situations, the use of a *tension calibrator* to check the bolt assemblies to be installed will be helpful in establishing the need for lubrication.

9.2.2. Calibrated Wrench Pretensioning: The *inspector* shall observe the pre-installation verification testing required in Section 8.2.2. Subsequently, it shall be ensured by *routine observation* that the bolting crew properly applies the calibrated wrench to the turned element. No further evidence of conformity is required. A pretension that is greater than the value specified in Table 8.1 shall not be cause for rejection.

Commentary:
For proper inspection of the method, it is necessary for the *inspector* to observe the required pre-installation verification testing of the *fastener assemblies* and the method to be used, followed by monitoring of the work in progress to ensure that the method is routinely and properly applied within the limits on time between removal from *protected storage* and final pretensioning.

9.2.3. Twist-Off-Type Tension-Control Bolt Pretensioning: The *inspector* shall observe the pre-installation verification testing required in Section 8.2.3. Subsequently, it shall be ensured by *routine observation* that the splined ends are properly severed during installation by the bolting crew. No further evidence of conformity is required. A pretension that is greater than the value specified in Table 8.1 shall not be cause for rejection.

Commentary:
The sheared-off splined end of an installed twist-off-type tension-control bolt assembly merely signifies that at some time the bolt was subjected to a torque that was adequate to cause the shearing. If in fact all fasteners are individually pretensioned in a single continuous operation without first properly snug-tightening all fasteners, they may give a misleading indication that the bolts have been properly pretensioned. Therefore, it is necessary that the *inspector* observe the required pre-installation verification testing of the *fastener*

assemblies, and the ability to apply partial tension prior to twist-off is demonstrated. This is followed by monitoring of the work in progress to ensure that the method is routinely and properly applied within the limits on time between removal from *protected storage* and final twist-off of the splined end.

9.2.4. Direct-Tension-Indicator Pretensioning: The *inspector* shall observe the pre-installation verification testing required in Section 8.2.4. Subsequently, but prior to pretensioning, it shall be ensured by *routine observation* that the appropriate feeler gage is accepted in at least half of the spaces between the protrusions of the direct tension indicator and that the protrusions are properly oriented away from the work. If the appropriate feeler gage is accepted in fewer than half of the spaces, the direct tension indicator shall be removed and replaced. After pretensioning, it shall be ensured by *routine observation* that the appropriate feeler gage is refused entry into at least half of the spaces between the protrusions. No further evidence of conformity is required. A pretension that is greater than that specified in Table 8.1 shall not be cause for rejection.

Commentary:
When the *joint* is initially snug tightened, the direct tension indicator arch-like protrusions will generally compress partially. Whenever the snug-tightening operation causes one-half or more of the gaps between these arch-like protrusions to close to 0.015 in. or less (0.005 in. or less for coated direct tension indicators), the direct tension indicator should be replaced. Only after this initial operation should the bolts be pretensioned in a systematic manner. If the bolts are installed and pretensioned in a single continuous operation, direct tension indicators may give the *inspector* a misleading indication that the bolts have been properly pretensioned. Therefore, it is necessary that the *inspector* observe the required pre-installation verification testing of the *fastener assemblies* with the direct-tension indicators properly located and the method to be used. Following this operation, the *inspector* should monitor the work in progress to ensure that the method is routinely and properly applied.

9.3. Slip-Critical Joints

Prior to assembly, it shall be visually verified that the *faying surfaces* of *slip-critical joints* meet the requirements in Section 3.2.2. Subsequently, the inspection required in Section 9.2 shall be performed.

Commentary:
When *joints* are specified as slip-critical, it is necessary to verify that the *faying surface* condition meets the requirements as specified in the contract documents prior to assembly of the *joint* and that the bolts are properly pretensioned after they have been installed. Accordingly, the inspection requirements for *slip-critical joints* are identical to those specified in Section 9.2, with additional *faying surface* condition inspection requirements.

SECTION 10. ARBITRATION

When it is suspected after inspection in accordance with Section 9.2 or Section 9.3 that bolts in pretensioned or *slip-critical joints* do not have the proper pretension, the following arbitration procedure is permitted.

(1) A representative sample of five bolt and nut assemblies of each combination of diameter, length, grade and *lot* in question shall be installed in a *tension calibrator*. The material under the turned element shall be the same as in the actual installation, that is, structural steel or hardened washer. The bolt shall be partially pretensioned to approximately 15 percent of the pretension specified in Table 8.1. Subsequently, the bolt shall be pretensioned to the minimum value specified in Table 8.1;
(2) A manual torque wrench that indicates torque by means of a dial, or one that may be adjusted to give an indication that a defined torque has been reached, shall be applied to the pretensioned bolt. The torque that is necessary to rotate the nut or bolt head five degrees (approximately 1 in. at 12 in. radius) relative to its mating component in the tightening direction shall be determined. The arbitration torque shall be determined by rejecting the high and low values and averaging the remaining three; and,
(3) Bolts represented by the above sample shall be tested by applying, in the tightening direction, the arbitration torque to 10 percent of the bolts, but no fewer than two bolts, selected at random in each *joint* in question. If no nut or bolt head is turned relative to its mating component by application of the arbitration torque, the *joint* shall be accepted as properly pretensioned.

If verification of bolt pretension is required after the passage of a period of time and exposure of the completed *joints*, an alternative arbitration procedure that is appropriate to the specific situation shall be used.

If any nut or bolt is turned relative to its mating component by an attempted application of the arbitration torque, all bolts in the *joint* shall be tested. Those bolts whose nut or head is turned relative to its mating component by application of the arbitration torque shall be re-pretensioned by the Fabricator or Erector and reinspected. Alternatively, the Fabricator or Erector, at their option, is permitted to re-pretension all of the bolts in the *joint* and subsequently resubmit the *joint* for inspection.

Commentary:
When bolt pretension is arbitrated using torque wrenches after pretensioning, such arbitration is subject to all of the uncertainties of torque-controlled calibrated wrench installation that are discussed in the Commentary to Section 8.2.2. Additionally, the reliability of after-the-fact torque wrench arbitration is reduced by the absence of many of the controls that are necessary to minimize the variability of the torque-to-pretension relationship, such as:

(1) The use of hardened washers[2];
(2) Careful attention to lubrication; and,
(3) The uncertainty of the effect of passage of time and exposure in the installed condition.

Furthermore, in many cases such arbitration may have to be based upon an arbitration torque that is determined either using bolts that can only be assumed to be representative of the bolts used in the actual job or using bolts that are removed from completed *joints*. Ultimately, such arbitration may wrongly reject bolts that were subjected to a properly implemented installation procedure. The arbitration procedure contained in this Specification is provided, in spite of its limitations, as the most feasible available at this time.

Arbitration using an ultrasonic extensometer or a mechanical one capable of measuring changes in bolt length can be performed on a sample of bolts that is representative of those that have been installed in the work. Several *manufacturers* produce equipment specifically for this application. The use of appropriate techniques, which includes calibration, can produce a very accurate measurement of the actual pretension. The method involves measurement of the change in bolt length during the release of the nut, combined with either a load calibration of the removed *fastener assembly* or a theoretical calculation of the force corresponding to the measured elastic release or "stretch." Reinstallation of the released bolt or installation of a replacement bolt is required.

The required release suggests that the direct use of extensometers as an inspection tool be used in only the most critical cases. The problem of reinstallation may require bolt replacement unless torque can be applied slowly using a manual or hydraulic wrench, which will permit the restoration of the original elongation.

[2] For example, because the reliability of the turn-of-nut pretensioning method is not dependent upon the presence or absence of washers under the turned element, washers are not generally required, except for other reasons as indicated in Section 6. Thus, in the absence of washers, after-the-fact, torque-based arbitration is particularly unreliable when the turn-of-nut pretensioning method has been used for installation.

APPENDIX A. TESTING METHOD TO DETERMINE THE SLIP COEFFICIENT FOR COATINGS USED IN BOLTED JOINTS

SECTION A1. GENERAL PROVISIONS

A1.1. Purpose and Scope

The purpose of this testing procedure is to determine the *mean slip coefficient* of a coating for use in the design of *slip-critical joints*. Adherence to this testing method provides that the creep deformation of the coating due to both the clamping force of the bolt and the service-load *joint* shear are such that the coating will provide satisfactory performance under sustained loading.

Commentary:

The Research Council on Structural Connections on June 14, 1984, first approved the testing method developed by Yura and Frank (1985). It has since been revised to incorporate changes resulting from the intervening years of experience with the testing method, and is now included as an appendix to this Specification.

The slip coefficient under short-term static loading has been found to be independent of the magnitude of the clamping force, variations in coating thickness and bolt hole diameter.

The proposed test methods are designed to provide the necessary information to evaluate the suitability of a coating for *slip-critical joints* and to determine the *mean slip coefficient* to be used in the design of the *joints*. The initial testing of the compression specimens provides a measure of the scatter of the slip coefficient.

The creep tests are designed to measure the creep behavior of the coating under the service loads, determined by the slip coefficient of the coating based upon the compression test results. The slip test conducted at the conclusion of the creep test is to ensure that the loss of clamping force in the bolt does not reduce the slip load below that associated with the design slip coefficient. ASTM A490 bolts are specified, since the loss of clamping force is larger for these bolts than that for ASTM A325 bolts. Qualification of the coating for use in a structure at an average thickness of 2 mils less than that to be used for the test specimen is to ensure that a casual buildup of the coating due to overspray and other causes does not jeopardize the coating's performance.

A1.2. Definition of Essential Variables

Essential variables are those that, if changed, will require retesting of the coating to determine its *mean slip coefficient*. The essential variables and the relationship of these variables to the limitations of application of the coating for structural *joints* are given below. The slip coefficient testing shall be repeated if there is any change in these essential variables.

A1.2.1. Time Interval: The time interval between application of the coating and the time of testing is an essential variable. The time interval must be recorded in hours and any special curing procedures detailed. Curing according to published *manufacturer's* recommendations would not be considered a special curing procedure. The coatings are qualified for use in structural *connections* that are assembled after coating for a time equal to or greater than the interval used in the test specimens. Special curing conditions used in the test specimens will also apply to the use of the coating in the structural *connections*.

A1.2.2. Coating Thickness: The coating thickness is an essential variable. The maximum average coating thickness, as per SSPC PA2 (SSPC 1993; SSPC 1991), allowed on the faying surfaces is 2 mils less than the average thickness, rounded to the nearest whole mil, of the coating that is used on the test specimens.

A1.2.3. Coating Composition and Method of Manufacture: The composition of the coating, including the thinners used, and its method of manufacture are essential variables.

A1.3. Retesting

A coating that fails to meet the creep or the post-creep slip test requirements in Section A4 may be retested in accordance with methods in Section A4 at a lower slip coefficient without repeating the static short-term tests specified in Section A3. Essential variables shall remain unchanged in the retest.

SECTION A2. TEST PLATES AND COATING OF THE SPECIMENS

A2.1. Test Plates

The test specimen plates for the short-term static tests are shown in Figure A1. The plates are 4 in. × 4 in. × ⅝ in. thick, with a 1 in. diameter hole drilled 1½ in. ± 1⁄16 in. from one edge. The test specimen plates for the creep tests are shown in Figure A2. The plates are 4 in. × 7 in. × ⅝ in. thick with two 1 in. diameter holes drilled 1½ in. ± 1⁄16 in. from each end. The edges of the plates may be milled, as-rolled or saw-cut; thermally cut edges are not permitted. The plates shall be flat enough to ensure that they will be in reasonably full contact over the *faying surface*. All burrs, lips or rough edges shall be removed. The arrangement of the specimen plates for the testing is shown in Figure A2. The plates shall be fabricated from a steel with a specified minimum yield strength that is between 36 and 50 ksi.

If specimens with more than one bolt are desired, the contact surface per bolt shall be 4 in. × 3 in. as shown for the single-bolt specimen in Figure A1.

Commentary:

The use of 1 in.-diameter bolt holes in the specimens is to ensure that adequate clearance is available for slip. Fabrication tolerances, coating buildup on the holes, and assembly tolerances tend to reduce the apparent clearances.

A2.2. Specimen Coating

Coatings are to be applied to the specimens in a manner that is consistent with that to be used in the actual intended structural application. The method of applying the coating and the surface preparation shall be given in the test report. The specimens are to be coated to an average thickness that is 2 mils greater than the maximum thickness to be used in the structure on both of the plate surfaces (the faying and outer surfaces). The thickness of the total coating and the primer, if used, shall be measured on the contact surface of the specimens. The thickness shall be measured in accordance with SSPC-PA2 (SSPC, 1993; SSPC, 1991). Two spot readings (six gage readings) shall be made for each contact surface. The overall average thickness from the three plates comprising a specimen is the average thickness for the specimen. This value shall be reported for each specimen. The average coating thickness of the creep specimens shall be calculated and reported.

The time between application of the coating and specimen assembly shall be the same for all specimens within ±4 hours. The average time shall be calculated and reported.

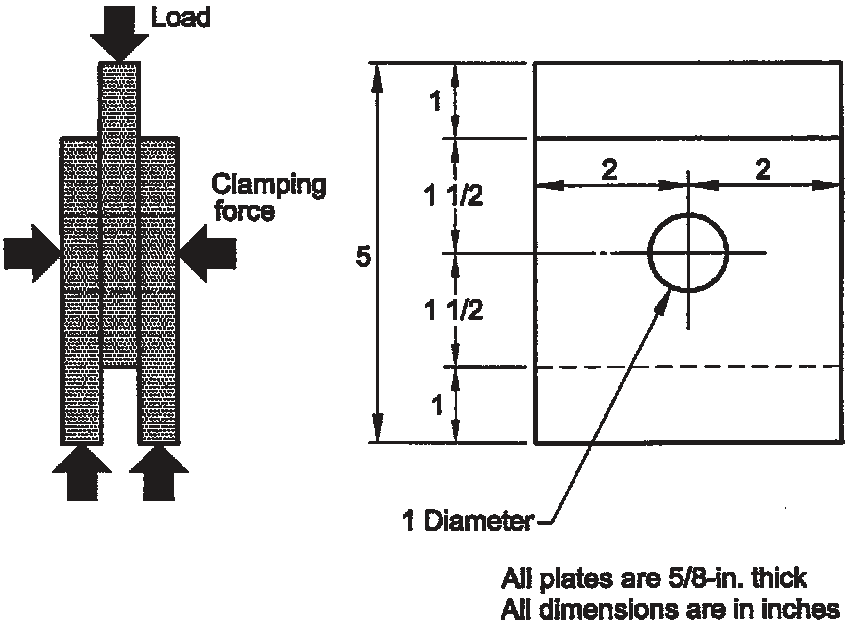

Figure A-1. Compression slip test specimen.

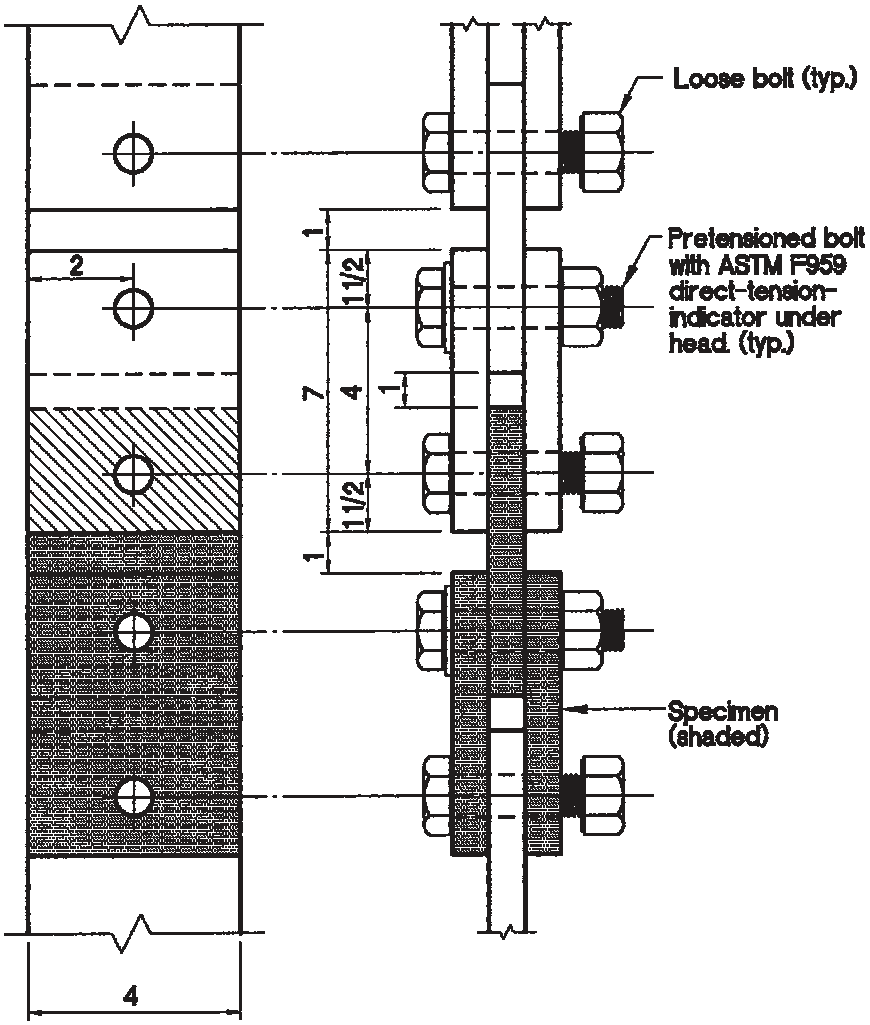

Figure A-2. Creep test specimen assembly.

SECTION A3. SLIP TESTS

The methods and procedures described herein are used to experimentally determine the *mean slip coefficient* under short-term static loading for *high-strength bolted joints*. The *mean slip coefficient* shall be determined by testing one set of five specimens.

Commentary:
The slip load measured in this setup yields the slip coefficient directly since the clamping force is controlled and measured directly. The resulting slip coefficient has been found to correlate with both tension and compression tests of bolted specimens. However, tests of bolted specimens revealed that the clamping force may not be constant but decreases with time due to the compressive creep of the coating on the *faying surfaces* and under the nut and bolt head. The reduction in clamping force can be considerable for *joints* with high clamping force and thick coatings (as much as a 20 percent loss). This reduction in clamping force causes a corresponding reduction in the slip load. The resulting reduction in slip load must be considered in the procedure used to determine the design allowable slip loads for the coating.

The loss in clamping force is a characteristic of the coating. Consequently, it cannot be accounted for by an increase in the factor of safety or a reduction in the clamping force used for design without unduly penalizing coatings that do not exhibit this behavior.

A3.1. Compression Test Setup

The test setup shown in Figure A3 has two major loading components, one to apply a clamping force to the specimen plates and another to apply a compressive load to the specimen so that the load is transferred across the *faying surfaces* by friction.

A3.1.1. Clamping Force System: The clamping force system consists of a ⅞ in. diameter threaded rod that passes through the specimen and a centerhole compression ram. An ASTM A563 grade DH nut is used at both ends of the rod and a hardened washer is used at each side of the test specimen. Between the ram and the specimen is a specially modified ⅞ in. diameter ASTM A563 grade DH nut in which the threads have been drilled out so that it will slide with little resistance along the rod. When oil is pumped into the centerhole ram, the piston rod extends, thus forcing the special nut against one of the outside plates of the specimen. This action puts tension in the threaded rod and applies a clamping force to the specimen, thereby simulating the effect of a pretensioned bolt. If the diameter of the centerhole ram is greater than 1 in., additional plate washers will be necessary at the ends of the ram. The clamping force system shall have a capability to apply a load of at least 49 kips and shall maintain this load during the test with an accuracy of 0.5 kips.

Commentary:
The slip coefficient can be easily determined using the hydraulic bolt test setup included in this Specification. The clamping force system simulates the

clamping action of a pretensioned *high-strength bolt*. The centerhole ram applies a clamping force to the specimen, simulating that due to a pretensioned bolt.

A3.1.2. Compressive Load System: A compressive load shall be applied to the specimen until slip occurs. This compressive load shall be applied with a compression test machine or a reaction frame using a hydraulic loading device. The loading device and the necessary supporting elements shall be able to support a force of 120 kips. The compression loading system shall have a minimum accuracy of 1 percent of the slip load.

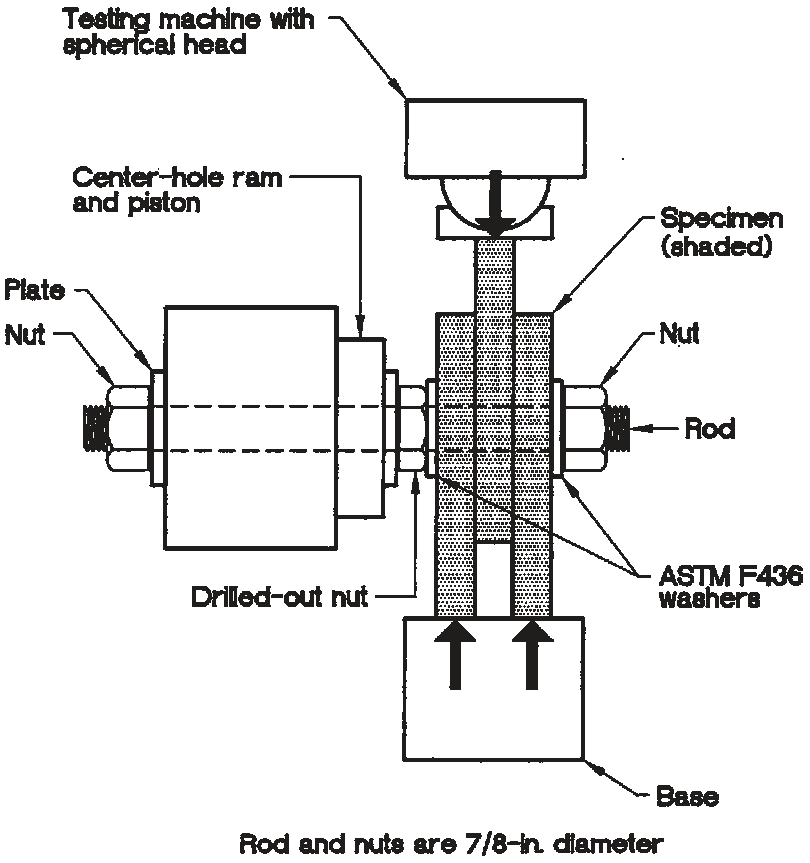

Figure A-3. Compression slip test setup.

A3.2. Instrumentation

A3.2.1. Clamping Force: The clamping force shall be measured within 0.5 kips. This is accomplished by measuring the pressure in the calibrated ram or placing a load cell in series with the ram.

A3.2.2. Compression Load: The compression load shall be measured during the test by direct reading from a compression testing machine, a load cell in series with the specimen and the compression loading device or pressure readings on a calibrated compression ram.

A3.2.3. Slip Deformation: The displacement of the center plate relative to the two outside plates shall be measured. This displacement, called "slip" for simplicity, shall be the average or that which occurs at the centerline of the specimen. This can be accomplished by using the average of two gages placed on the two exposed edges of the specimen or by monitoring the movement of the loading head relative to the base. If the latter method is used, due regard shall be taken for any slack that may be present in the loading system prior to application of the load. Deflections shall be measured by dial gages or any other calibrated device that has an accuracy of at least 0.001 in.

A3.3. Test Procedure

The specimen shall be installed in the test setup as shown in Figure A3. Before the hydraulic clamping force is applied, the individual plates shall be positioned so that they are in, or close to, full bearing contact with the ⅞ in. threaded rod in a direction that is opposite to the planned compressive loading to ensure obvious slip deformation. Care shall be taken in positioning the two outside plates so that the specimen is perpendicular to the base with both plates in contact with the base. After the plates are positioned, the centerhole ram shall be engaged to produce a clamping force of 49 kips. The applied clamping force shall be maintained within ±0.5 kips during the test until slip occurs.

The spherical head of the compression loading machine shall be brought into contact with the center plate of the specimen after the clamping force is applied. The spherical head or other appropriate device ensures concentric loading. When 1 kip or less of compressive load is applied, the slip gages shall be engaged or attached. The purpose of engaging the deflection gage(s), after a slight load is applied, is to eliminate initial specimen settling deformation from the slip reading.

When the slip gages are in place, the compression load shall be applied at a rate that does not exceed 25 kips per minute nor 0.003 in. of slip displacement per minute until the slip load is reached. The test should be terminated when a slip of 0.05 in. or greater is recorded. The load-slip relationship should preferably be monitored continuously on an X-Y plotter

throughout the test, but in lieu of continuous data, sufficient load-slip data shall be recorded to evaluate the slip load defined below.

A3.4. Slip Load

Typical load-slip response is shown in Figure A4. Three types of curves are usually observed and the slip load associated with each type is defined as follows:

Curve (a) Slip load is the maximum load, provided this maximum occurs before a slip of 0.02 in. is recorded.

Curve (b) Slip load is the load at which the slip rate increases suddenly.

Curve (c) Slip load is the load corresponding to a deformation of 0.02 in. This definition applies when the load vs. slip curves show a gradual change in response.

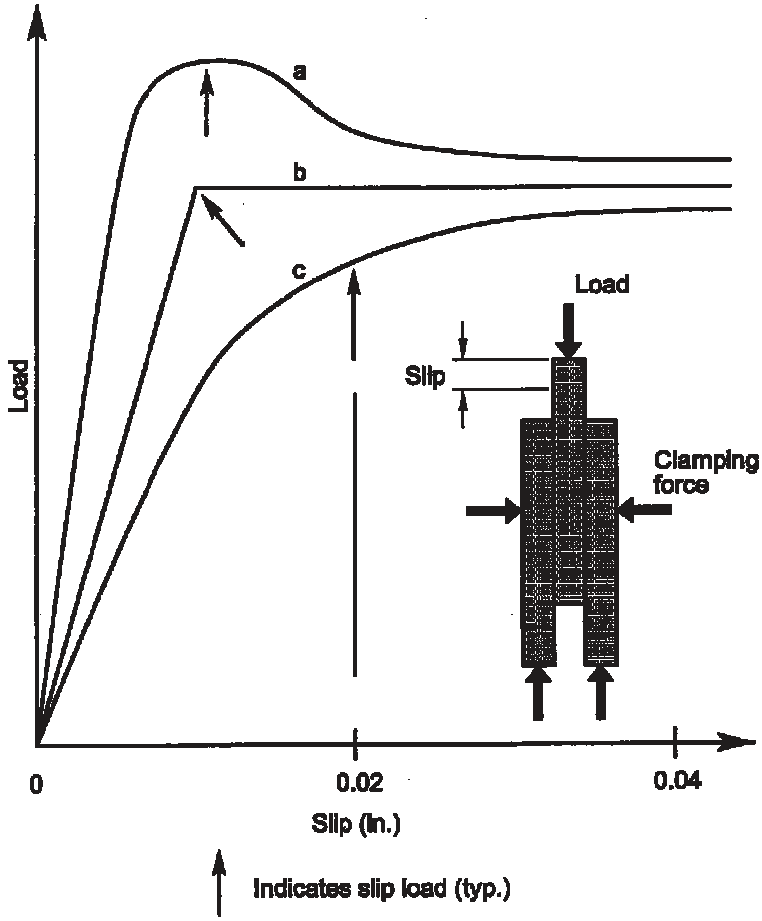

Figure A-4. Definition of slip load.

A3.5. Slip Coefficient

The slip coefficient for an individual specimen k_s shall be calculated as follows:

$$k_s = \frac{slip\ load}{2 \times clamping\ force} \qquad \text{(Equation A3.1)}$$

The *mean slip coefficient* μ for one set of five specimens shall be reported.

A3.6. Alternative Test Methods

Alternative test methods to determine slip are permitted, provided the accuracy of load measurement and clamping satisfies the conditions presented in the previous sections. For example, the slip load may be determined from a tension-type test setup rather than the compression-type test setup as long as the contact surface area per bolt of the test specimen is the same as that shown in Figure A1. The clamping force of at least 49 kips may be applied by any means, provided the force can be established within ± 1 percent.

Commentary:
Alternative test procedures and specimens may be used as long as the accuracy of load measurement and specimen geometry are maintained as prescribed. For example, strain-gaged bolts can usually provide the desired accuracy. However, bolts that are pretensioned by the turn-of-nut, calibrated wrench, alternative-design fastener, or direct-tension-indicator pretensioning method usually show too much variation to meet the ± 1 percent requirement of the slip test.

SECTION A4. TENSION CREEP TEST

The test method outlined is intended to ensure that the coating will not undergo significant creep deformation under sustained service loading. The test also indicates the loss in clamping force in the bolt due to the compression or creep of the coating. Three replicate specimens are to be tested.

Commentary:
The creep deformation of the bolted *joint* under the applied shear loading is also an important characteristic and a function of the coating applied. Thicker coatings tend to creep more than thinner coatings. Rate of creep deformation increases as the applied load approaches the slip load. Extensive testing has shown that the rate of creep is not constant with time, rather it decreases with time. After about 1,000 hours of loading, the additional creep deformation is negligible.

A4.1. Test Setup

Tension-type specimens, as shown in Figure A2, are to be used. The replicate specimens are to be linked together in a single chain-like arrangement, using loose pin bolts, so the same load is applied to all specimens. The specimens

shall be assembled so the specimen plates are bearing against the bolt in a direction opposite to the applied tension loading. Care shall be taken in the assembly of the specimens to ensure the centerline of the holes used to accept the pin bolts is in line with the bolts used to assemble the *joint*. The load level, specified in Section A4.2, shall be maintained constant within ±1 percent by springs, load maintainers, servo controllers, dead weight or other suitable equipment. The bolts used to clamp the specimens together shall be ⅞ in. diameter ASTM A490 bolts. All bolts shall come from the same *lot*.

The clamping force in the bolts shall be a minimum of 49 kips. The clamping force shall be determined by calibrating the bolt force with bolt elongation, if standard bolts are used. Alternatively, special *fastener assemblies* that control the clamping force by other means, such as calibrated bolt torque or strain gages, are permitted. A minimum of three bolt calibrations shall be performed using the technique selected for bolt force determination. The average of the three-bolt calibration shall be calculated and reported. The method of measuring bolt force shall ensure the clamping force is within ±2 kips of the average value.

The relative slip between the outside plates and the center plates shall be measured to an accuracy of 0.001 in. These slips are to be measured on both sides of each specimen.

A4.2. Test Procedure

The load to be placed on the creep specimens is the service load permitted by Equation 5.7 for ⅞ in. diameter ASTM A490 bolts in *slip-critical joints* for the particular slip coefficient category under consideration. The load shall be placed on the specimen and held for 1,000 hours. The creep deformation of a specimen is calculated using the average reading of the two displacements on either side of the specimen. The difference between the average after 1,000 hours and the initial average reading taken within one-half hour after loading the specimens is defined as the creep deformation of the specimen. This value shall be reported for each specimen. If the creep deformation of any specimen exceeds 0.005 in., the coating has failed the test for the slip coefficient used. The coating may be retested using new specimens in accordance with this Section at a load corresponding to a lower value of slip coefficient.

If the value of creep deformation is less than 0.005 in. for all specimens, the specimens shall be loaded in tension to a load that is equal to the average clamping force times the design slip coefficient times 2, since there are two slip planes. The average slip deformation that occurs at this load shall be less than 0.015 in. for the three specimens. If the deformation is greater than this value, the coating is considered to have failed to meet the requirements for the particular *mean slip coefficient* used. The value of deformation for each specimen shall be reported.

Commentary:
See Commentary in Section A1.1.

APPENDIX B. ALLOWABLE STRESS DESIGN (ASD) ALTERNATIVE

As an alternative to the load and resistance factor design provisions given in Sections 1 through 10, the following allowable stress design provisions are permitted. The provisions in Sections 1 through 10 in this Specification shall apply to ASD, except as follows:

SECTION B1. GENERAL REQUIREMENTS

B1.2. Loads, Load Factors and Load Combinations

The design and construction of the structure shall conform to an applicable allowable stress design specification for steel structures. When permitted in the applicable building code or specification, the allowable stresses in Section B5 are permitted to be increased to account for the effects of multiple transient loads in combination. When a load reduction factor is used to account for the effects of multiple transient loads in combination, the allowable stresses in Section B5 shall not be increased.

Commentary:
Although loads, load factors and load combinations are not explicitly specified in this Specification, the allowable stresses herein are based upon those specified in ASCE 7. When the design is governed by other load criteria, the allowable stresses specified herein shall be adjusted as appropriate.

SECTION B5. LIMIT STATES IN BOLTED JOINTS

The allowable shear strength and the allowable tensile strength of bolts shall be determined in accordance with Section B5.1. The interaction of combined shear and tension on bolts shall be limited in accordance with Section B5.2. The allowable bearing strength of the connected parts at bolt holes shall be determined in accordance with Section B5.3. Each of these allowable strengths shall be equal to or greater than the effect of the service loads. The axial load in bolts that are subject to tension or combined shear and tension shall be calculated with consideration of the externally applied tensile load and any additional tension resulting from *prying action* produced by deformation of the connected parts.

When slip resistance is required at the *faying surfaces* subject to shear or combined shear and tension, the slip resistance determined in accordance with Section B5.4 shall be equal to or greater than the effect of the service loads. In addition, the strength requirements in Sections B5.1, B5.2 and B5.3 shall also be met.

When bolts are subject to cyclic application of axial tension, the allowable stress determined in accordance with Section B5.5 shall be equal to or greater than the stress due to the effect of the service loads, including any additional tension resulting from *prying action* produced by deformation of the connected parts. In addition, the strength requirements in Sections B5.1, B5.2 and B5.3 shall also be met.

Table B5.1. Allowable Stresses in Bolts

Applied Load Condition			Allowable Stress, F_a, ksi	
			ASTM A325 or F1852	ASTM A490 or F2280
Tension [a]	Static		45	57
	Fatigue		See Section 5.5	
Shear [a,b]	Threads included in shear plane	$L_s \le 38$ in.	27	34
		$L_s > 38$ in.	23	28
	Threads excluded from shear plane	$L_s \le 38$ in.	34	42
		$L_s > 38$ in.	28	35

[a] Except as required in Section 5.2.

[b] Reduction for values for $L_s > 38$ in. applies only when the joint is end loaded, such as splice plates on a beam or column flange.

B5.1. Allowable Shear and Tensile Stresses

Shear and tensile strengths shall not be reduced by the installed bolt pretension. For *joints*, the allowable strength shall be based upon the allowable shear and tensile stresses of the individual bolts and shall be taken as the sum of the allowable strengths of the individual bolts.

The allowable shear strength or allowable tensile strength for an ASTM A325, A490, F1852 or F2280 bolt is R_a, where:

$$R_a = F_a A_b \qquad \text{(Equation B5.1)}$$

where

R_a = allowable shear strength per shear plane or allowable tensile strength of a bolt, kips;

F_a = allowable stress from Table B5.1 for the appropriate applied load conditions, ksi, adjusted for the presence of fillers or shims as required below; and,

A_b = cross-sectional area based upon the nominal diameter of bolt, in.^{2}

When a bolt that carries load passes through fillers or shims in a shear plane that are equal to or less than ¼ in. thick, F_a from Table B5.1 shall be used without reduction. When a bolt that carries load passes through fillers or

shims that are greater than ¼ in. thick, one of the following requirements shall apply:

(1) For fillers or shims that are equal to or less than ¾ in. thick, F_a from Table B5.1 shall be multiplied by the factor [1 - 0.4(t' - 0.25)], where t' is the total thickness of fillers or shims, in., up to ¾ in.;
(2) The fillers or shims shall be extended beyond the *joint* and the filler extension shall be secured with enough bolts to uniformly distribute the total force in the connected element over the combined cross-section of the connected element and the fillers or shims;
(3) The size of the *joint* shall be increased to accommodate a number of bolts that is equivalent to the total number required in (2) above; or,
(4) The *joint* shall be designed as a *slip-critical joint*. The slip resistance of the *joint* shall not be reduced for the presence of fillers or shims.

B5.2. Combined Shear and Tension Stress

When combined shear and tension loads are transmitted by an ASTM A325, A490, F1852 or F2280 bolt, the bolt shall be proportioned so that the tensile stress F_t, ksi, on the cross-sectional area based upon the nominal diameter of bolt A_b produced by forces applied to the connected parts, shall not exceed the values computed from the equations in Table B5.2, where f_v, the shear stress produced by the same forces, shall not exceed the value for shear determined in accordance with the requirements in Section B5.1.

B5.3. Allowable Bearing at Bolt Holes

For *joints*, the allowable bearing strength shall be taken as the sum of the strengths of the connected material at the individual bolt holes.

The allowable bearing strength of the connected material at a standard bolt hole, oversized bolt hole, short-slotted bolt hole independent of the direction of loading or long-slotted bolt hole with the slot parallel to the direction of the bearing load is R_a, where:

(1) when deformation of the bolt hole at service load is a design consideration;

$$R_a = 0.6 L_c t F_u \le 1.2 d_b t F_u \qquad \text{(Equation B5.2)}$$

(2) when deformation of the bolt hole at service load is not a design consideration;

$$R_a = 0.75 L_c t F_u \le 1.5 d_b t F_u \qquad \text{(Equation B5.3)}$$

Table B5.2. Allowable Tensile Stress, F_t, for Bolts Subject to Combined Shear and Tension

Thread Condition		Allowable Tensile Stress F_t, ksi	
		ASTM A325 or F1852	ASTM A490 or F2280
Threads included in shear plane	$L_s \le 38$ in.	$\sqrt{(45)^2 - 2.78 f_v^2}$	$\sqrt{(57)^2 - 2.81 f_v^2}$
	$L_s > 38$ in.	$\sqrt{(45)^2 - 3.82 f_v^2}$	$\sqrt{(57)^2 - 4.14 f_v^2}$
Threads excluded from shear plane	$L_s \le 38$ in.	$\sqrt{(45)^2 - 1.75 f_v^2}$	$\sqrt{(57)^2 - 1.84 f_v^2}$
	$L_s > 38$ in.	$\sqrt{(45)^2 - 2.58 f_v^2}$	$\sqrt{(57)^2 - 2.65 f_v^2}$

The allowable bearing strength of the connected material at a long-slotted bolt hole with the slot perpendicular to the direction of the bearing load is R_a, where:

$$R_a = 0.5 L_c t F_u \le d_b t F_u \qquad \text{(Equation B5.4)}$$

In Equations B5.2, B5.3 and B5.4,

R_a = allowable bearing strength of the connected material, kips;
F_u = specified minimum tensile strength (per unit area) of the connected material, ksi;
L_c = clear distance, in the direction of load, between the edge of the hole and the edge of the adjacent hole or the edge of the material, in.;
D_b = nominal bolt diameter, in.; and,
t = thickness of the connected material, in.

B5.4. Allowable Slip Resistance

The allowable slip resistance is R_a, where:

$$R_n = H\mu D T_m N_b \left(1 - \frac{T}{D T_m N_b}\right) \qquad \text{(Equation B5.5)}$$

where

H = 1.0 for standard holes
= 0.85 for oversized and short-slotted holes
= 0.70 for long-slotted holes perpendicular to the direction of load
= 0.60 for long-slotted holes parallel to the direction of load;

Table B5.3. Allowable Stress for Fatigue Loading

Number of Cycles	Max. Bolt Stress for Design at Service Loads [a], ksi	
	ASTM A325 or F1852	ASTM A490 or F2280
Not more than 20,000	45	57
From 20,000 to 500,000	40	49
More than 500,000	31	38

[a] Including the effects of prying action, if any, but excluding the pretension.

μ = *mean slip coefficient* for Class A, B or C faying surfaces, as applicable, or as established by testing in accordance with Appendix A (see Section 3.2.2(b))
= 0.33 for Class A *faying surfaces* (uncoated clean mill scale steel surfaces or surfaces with Class A coatings on blast cleaned steel)
= 0.50 for Class B surfaces (uncoated blast-cleaned steel surfaces or surfaces with Class B coatings on blast-cleaned steel)
= 0.35 for Class C surfaces (roughened hot-dip galvanized surfaces);

D = 0.80, a slip probability factor that reflects the distribution of actual slip coefficient values about the mean, the ratio of measured bolt tensile strength to the specified minimum values, and a slip probability level; the use of other values of D shall be approved by the *Engineer of Record*;

T_m = specified minimum bolt pretension (for pretensioned joints as specified in Table 8.1), kips;

N_b = number of bolts in the joint; and,

T = applied service load in tension (tensile component of applied service load for combined shear and tension loading), kips
= zero if the joint is subject to shear only

B5.5. Tensile Fatigue

The tensile stress in the bolt that results from the cyclic application of externally applied service loads and the prying force, if any, but not the pretension, shall not exceed the stress in Table B5.3. The nominal diameter of the bolt shall be used in calculating the bolt stress. The connected parts shall be proportioned so that the calculated prying force does not exceed 30 percent of the externally applied load. *Joints* that are subject to tensile fatigue loading shall be pretensioned in accordance with Section 4.2 or slip-critical in accordance with Section 4**.**

REFERENCES

Allen, R.N. and J.W. Fisher, 1968, "Bolted Joints With Oversize or Slotted Holes," *Journal of the Structural Division*, Vol. 94, No. ST9, September, ASCE, Reston, VA.

American Institute of Steel Construction, 2010, *Specification for Structural Steel Buildings*, AISC, Chicago, IL.

Birkemoe, P.C. and D.C. Herrschaft, 1970, "Bolted Galvanized Bridges—Engineering Acceptance Near," *Civil Engineering*, April, ASCE, Reston, VA.

Brahimi, Salim, 2006, "Qualification of DACROMET® for use with ASTM A490 High-Strength Structural Bolts," IBECA Technologies Corp., ASTM F16 Research Report RR: F16-1001.

Carter, C.J., R.H.R. Tide and J.A. Yura, 1997, "A Summary of Changes and Derivation of LRFD Bolt Design Provisions," *Engineering Journal*, Vol. 34, No. 3, (3rd Qtr.), AISC, Chicago, IL.

Carter, C.J., 1996, "Specifying Bolt Length for High-Strength Bolts," *Engineering Journal*, Vol. 33, No. 2, (2nd Qtr.), AISC, Chicago, IL.

Chesson, Jr., E, N.L. Faustino and W.H. Munse, 1965, "High-Strength Bolts Subjected to Tension and Shear," *Journal of the Structural Division*, Vol. 91, No. ST5, October, ASCE, Reston, VA.

Fisher, J.W. and J.L. Rumpf, 1965, "Analysis of Bolted Butt Joints," *Journal of the Structural Division*, Vol. 91, No. ST5, October, ASCE, Reston, VA.

Frank, K.H. and J.A. Yura, 1981, "An Experimental Study of Bolted Shear Connections," FHWA/RD-81/148, December, Federal Highway Administration, Washington, D.C.

Kulak, G.L., J.W. Fisher and J.H.A. Struik, 1987, *Guide to Design Criteria for Bolted and Riveted Joints*, Second Edition, John Wiley & Sons, New York, NY.

Kulak, G.L. and P.C. Birkemoe, 1993, "Field Studies of Bolt Pretension," *Journal of Constructional Steel Research*, No. 25, pp. 95-106.

Kulak, G.L. and S.T. Undershute, 1998, "Tension Control Bolts: Strength and Installation," *Journal of Bridge Engineering*, Vol. 3 No. 1, February, ASCE, Reston, VA.

Manuel, T.J. and G.L. Kulak, 2000, "Strength of Joints that Combine Bolts and Welds," *Journal of Structural Engineering*, Vol. 126, No. 3, March, ASCE, Reston, VA.

McKinney, M. and F.J. Zwerneman, 1993, "The Effect of Burrs on the Slip Capacity in Multiple Bolt Connections," *Final Report to the Research Council on Structural Connections*, August.

Munse, W. H., 1967, "Structural Behavior of Hot Galvanized Bolted Connections," *Proceedings of the 8th International Conference on Hot-dip Galvanizing*, June, London, England.

Polyzois, D. and K.H. Frank, 1986, "Effect of Overspray and Incomplete Masking of Faying Surfaces on the Slip Resistance of Bolted Connections," *Engineering Journal*, Vol. 23, No. 2, (2nd Qtr), AISC, Chicago, IL.

Polyzois, D. and J.A. Yura, 1985, "Effect of Burrs on Bolted Friction Connections," *Engineering Journal*, Vol.22, No. 3, (3rd Qtr), AISC, Chicago, IL.

Schnupp, K. O.; Murray, T. M. (2003), "Effects of Head Size on the Performance of Twist-Off Bolts," Virginia Polytechnic Institute and State University, CC/VTI-ST 03/09, July 2003.

Sherman, D.R. and J.A. Yura, 1998, "Bolted Double-Angle Compression Members," *Journal of Constructional Steel Research*, 46:1-3, Paper No. 197, Elsevier Science Ltd., Kidlington, Oxford, UK.

SSPC, 1993, *Steel Structures Painting Manual*, Vol. 1, Third Edition, SSPC: The Society for Protective Coatings, Pittsburgh, PA.

SSPC, 1991, *Steel Structures Painting Manual*, Vol. 2, Sixth Edition, SSPC: The Society for Protective Coatings, Pittsburgh, PA.

Tide, R.H.R., 2010, "Bolt Shear Design Considerations," *Engineering Journal*, Vol. 47, No. 1, (1st Qtr.), AISC, Chicago, IL.

Yura, J.A. and K.H. Frank, 1985, "Testing Method to Determine Slip Coefficient for Coatings Used in Bolted Joints," *Engineering Journal*, Vol. 22, No. 3, (3rd Qtr.), AISC, Chicago, IL.

Yura, J.A., K.H. Frank and L. Cayes, 1981, "Bolted Friction Connections with Weathering Steel," *Journal of the Structural Division*, Vol. 107, No. ST11, November, ASCE, Reston, VA.

INDEX

Alternative-design fasteners **16**
Alternative washer-type indicating device **15**
Arbitration **63**

Bearing strength **36**
Bolt holes
Bearing strength at 36
Use of 21
Bolt pretensioning **51**
Using calibrated wrench pretensioning 55
Using direct-tension-indicator pretensioning 57
Using turn-of-nut pretensioning 53
Using twist-off-type tension-control bolt pretensioning 56
Bolted joints, limit states in **31**
Bolted parts **17**
Bolts
Alternative-design fasteners 16
Geometry 6
Heavy-hex structural 6
Reuse 6
Specifications 6
Twist-off-type tension-control bolt assemblies 15
Burrs **24**

Calibrated wrench pretensioning
Inspection of 61
Installation using 55
Use of washers in 44
Calibrator, tension **47**
Certification of fastener components, manufacturer **5**
Coatings
On faying surfaces 17
Testing method to determine the slip coefficient for 65
Combined shear and tension **35**
Components, fastener **5**
Compressible-washer-type direct tension indicators **14**
Connected plies **17**

Design
Bearing strength at bolt holes 36
Combined shear and tension 35
General 31

Shear strength 32
Slip resistance 38
At the factored-load level 38
At the service-load level 39
Tensile fatigue 42
Tensile strength 32
Direct tension indicators
Compressible-washer-type, general 14
Inspection of 62
Installation using 57
Use of washers with 44
Drawing information 3

Fasteners
Alternative-design 16
Manufacturer certification of 5
Storage of 5
Fatigue, tensile 42
Faying surfaces 17
Coated 18
Galvanized 18
In pretensioned joints 17
In slip-critical joints 18
In snug-tightened joints 17
Uncoated 18

Galvanized faying surfaces 18
General requirements 1
Geometry
Bolts 6
Nuts 13
Twist-off-type tension-control bolt assemblies 15

Heavy-hex nuts 13
Heavy-hex structural bolts 6
Holes
Bolt 21
Long-slotted 24
Oversized 23
Oversized, use of washers with 45
Short-slotted 24
Slotted, use of washers with 44,45
Standard 22

Indicating devices
Alternative washer-type 15
Twist-off-type tension-control bolt assemblies 15
Washer-type 14
Inspection 59
Of calibrated wrench pretensioning 61
Of direct-tension-indicator pretensioning 62
Of pretensioned joints 59
Of slip-critical joints 62
Of snug-tightened joints 59
Of turn-of-nut pretensioning 60
Of twist-off-type tension-control bolt pretensioning 61
Installation 51
In pretensioned joints 51
In slip-critical joints 51
In snug-tightened joints 51
Using calibrated wrench pretensioning 55
Using direct-tension-indicator pretensioning 57
Using turn-of-nut pretensioning 53
Using twist-off-type tension-control bolt pretensioning 56

Joints
Limit states in 31
Pretensioned 29
  Faying surfaces in 17
  Inspection of 59
  Installation in 51
Slip-critical 30
  Faying surfaces in 18
  Inspection of 62
  Installation in 51
Snug-tightened 28
  Faying surfaces 17
  Inspection of 59
  Installation in 51
Type 26

Limit states in bolted joints 31
Loads 1
Combinations 1
Factors 1
Long-slotted holes
General 24
Use of washers with 44,45

Manufacturer certification of fastener components 5

Nuts
Geometry 13
Heavy-hex 13
Specifications 13

Oversized holes
General 23
Use of washers with 45

Parts, bolted 17
Plies, connected 17
Pre-installation verification 47
Pretensioned joints
Faying surfaces in 17
General 29
Inspection of 59
Installation in 51
Use of washers in 44
Using calibrated wrench pretensioning 55
Using direct-tension-indicator pretensioning 57
Using turn-of-nut pretensioning 53
Using twist-off-type tension-control bolt pretensioning 56

References 80
Requirements, general 1
Reuse, bolts 6

Shear, design strength 32
Short-slotted holes
General 24
Use of washers with 44,45
Slip coefficient for coatings, testing to determine 65
Slip-critical joints
Faying surfaces in 18
General 30
Inspection of 62
Installation in 51
Use of washers in 44
Slip resistance 38
Slotted hole, use of washers with 44,45
Snug-tightened joints
Faying surfaces in 17

General 28
Inspection of 59
Installation in 51
Use of washers in 44
Specifications
Bolts 6
General 2
Nuts 13
Twist-off-type tension-control bolt assemblies 15
Washers 14
Standard holes 22
Standards 2
Storage of fastener components 5
Strength
Combined shear and tension 35
Bearing 36
Shear 32
Slip resistance 38
Tensile 32
Tensile fatigue 42
Surfaces, faying 17

Tensile design strength 32
Tensile fatigue 42
Tension calibrator 47
Testing, slip coefficient for coatings 65
Turn-of-nut pretensioning
Inspection of 60
Installation using 53
Twist-off-type tension-control bolt assemblies
Geometry 15
Inspection of 61
Installation using 56
Specifications 15
Use of washers in 44

Uncoated faying surfaces 18
Use of washers 44

Verification, pre-installation 47

Washers
General 14
Use of 44
Washer-type indicating devices 14

www.boltcouncil.org
RESEARCH COUNCIL ON STRUCTURAL CONNECTIONS
c/o AISC, One East Wacker Drive, Suite 700, Chicago, Illinois 60601

AISC 348-09 (2M910)

AISC 303-10

Code of Standard Practice for Steel Buildings and Bridges

April 14, 2010

Supersedes the March 18, 2005 AISC *Code of Standard Practice for Steel Buildings and Bridges* and all previous versions.

Prepared by the American Institute of Steel Construction
under the direction of the AISC Committee
on the Code of Standard Practice.

AMERICAN INSTITUTE OF STEEL CONSTRUCTION
One East Wacker Drive, Suite 700, Chicago, Illinois 60601

AISC © 2010
by
American Institute of Steel Construction

All rights reserved. This book or any part thereof must not be reproduced in any form without the written permission of the publisher. The AISC logo is a registered trademark of AISC.

The information presented in this publication has been prepared in accordance with recognized engineering principles and is for general information only. While it is believed to be accurate, this information should not be used or relied upon for any specific application without competent professional examination and verification of its accuracy, suitability, and applicability by a licensed professional engineer, designer, or architect. The publication of the material contained herein is not intended as a representation or warranty on the part of the American Institute of Steel Construction or of any other person named herein, that this information is suitable for any general or particular use or of freedom from infringement of any patent or patents. Anyone making use of this information assumes all liability arising from such use.

Caution must be exercised when relying upon other specifications and codes developed by other bodies and incorporated by reference herein since such material may be modified or amended from time to time subsequent to the printing of this edition. The Institute bears no responsibility for such material other than to refer to it and incorporate it by reference at the time of the initial publication of this edition.

Printed in the United States of America

PREFACE

As in any industry, trade practices have developed among those that are involved in the design, purchase, fabrication and erection of structural steel. This Code provides a useful framework for a common understanding of the acceptable standards when contracting for structural steel. As such, it is useful for owners, architects, engineers, general contractors, construction managers, fabricators, steel detailers, erectors and others that are associated with construction in structural steel. Unless specific provisions to the contrary are contained in the contract documents, the existing trade practices that are contained herein are considered to be the standard custom and usage of the industry and are thereby incorporated into the relationships between the parties to a contract.

The Symbols and Glossary are an integral part of this Code. In many sections of this Code, a non-mandatory Commentary has been prepared to provide background and further explanation for the corresponding Code provisions. The user is encouraged to consult it.

Since the first edition of this Code was published in 1924, AISC has continuously surveyed the structural steel design community and construction industry to determine standard trade practices. Since then, this Code has been periodically updated to reflect new and changing technology and industry practices.

The 2000 edition was the fifth complete revision of this Code since it was first published. Like the 2005 edition, the 2010 edition is not a complete revision but does add important changes and updates. It is the result of the deliberations of a fair and balanced Committee, the membership of which included structural engineers, architects, a code official, a general contractor, fabricators, a steel detailer, erectors, inspectors, and an attorney. The following changes have been made in this revision:

- The scope in Section 1.1 has been revised to cover buildings and other structures in a manner that is consistent with how buildings and other structures are treated in AISC 360 (the AISC *Specification for Structural Steel Buildings*). A similar and corresponding revision has been made in Section 1.4.
- The list of referenced documents in Section 1.2 has been editorially updated.
- Section 1.9 has been added to emphasize that not all tolerances are explicitly covered in the Code, and that tolerances not covered are not to be assumed as zero.
- Clarification has been added in Section 2 that base plates and bearing plates are considered structural steel if they are attached to the structural frame, but not if they are loose items that do not attach to the structural steel frame.
- Editorial improvements have been made in the Commentary to Section 3.1 to improve upon the list of items that should be provided in the contract documents, as well as to link column differential shortening and anticipated deflections to information that has been added in the Commentary to Section 7.13.
- Explicit requirements have been added in Section 3.1.2 as “option 3” for when connection design work is delegated by the Structural Engineer of Record (SER) to be performed by another engineer. Provisions covering connection design by the

SER (option 1) and selection or completion of basic tabular connections by a steel detailer (option 2) also have been revised for consistency with and distinction from option 3. Additionally, the defined term *substantiating connection information* has been added to the Glossary, and revisions also have been made in Section 4 to correspond with the addition of option 3 in Section 3.1.2.

- Information has been added to the Commentary in Section 4.1 to summarize the importance and benefits of holding a pre-detailing conference to open lines of communication and develop a common understanding about the project.
- Section 4.7 has been added to address requirements for erection drawings.
- Section 6.4.3 has been modified to better address incidental camber in trusses.
- Information has been added in the Commentary to Section 7.10.1 to better describe the provisions that relate to special erection conditions or other considerations that are required by the design concept, as well as to highlight special considerations in the erection of cantilevered members.
- The intent in Section 7.13.1.2(d) has been clarified in the text as well as with the relocation of supporting Commentary.
- The intent in Section 10.2.5 has been editorially clarified for groove welds in butt joints and outside corner joints.
- The document has been editorially revised for consistency with current terms and other related documents.

The Committee thanks Glenn Bishop, the Council of American Structural Engineers (CASE), and its Guidelines Committee for their assistance and partnership in the development of Section 3.1.2 in this edition of the Code. Also, the Committee thanks Rex I. Lewis and Homer R. Peterson, II for their contributions as members of the Committee for part of this cycle of development, and honors Committee member Leonard R. Middleton, who passed away during this cycle.

By the AISC Committee on the Code of Standard Practice,

James A. Stori, Chairman
Barry L. Barger, Vice Chairman
William A. Andrews
Paul M. Brosnahan
Richard B. Cook
William B. Cooper
William R. Davidson
Theodore L. Droessler
Donald T. Engler
Lawrence G. Griffis
D. Kirk Harman
Viji Kuruvilla
Keith G. Landwehr
James L. Larson
H. Scott Metzger
Donald G. Moore
David B. Ratterman
David I. Ruby
Rex D. Smith
Thomas S. Tarpy, Jr.
James G. Thompson
Michael J. Tylk
Michael A. West
Charles J. Carter, Secretary
Amanuel Gebremeskel, Asst. Secretary

TABLE OF CONTENTS

Glossary vii

Section 1. General Provisions 1
1.1. Scope 1
1.2. Referenced Specifications, Codes and Standards 1
1.3. Units 2
1.4. Design Criteria 3
1.5. Responsibility for Design 3
1.6. Patents and Copyrights 3
1.7. Existing Structures 3
1.8. Means, Methods and Safety of Erection 4
1.9. Tolerances 4

Section 2. Classification of Materials 5
2.1. Definition of Structural Steel 5
2.2. Other Steel, Iron or Metal Items 6

Section 3. Design Drawings and Specifications 9
3.1. Structural Design Drawings and Specifications 9
3.2. Architectural, Electrical and Mechanical Design Drawings and Specifications 15
3.3. Discrepancies 15
3.4. Legibility of Design Drawings 16
3.5. Revisions to the Design Drawings and Specifications 16
3.6. Fast-Track Project Delivery 17

Section 4. Shop and Erection Drawings 18
4.1. Owner Responsibility 18
4.2. Fabricator Responsibility 19
4.3. Use of CAD Files and/or Copies of Design Drawings 20
4.4. Approval 21
4.5. Shop and/or Erection Drawings Not Furnished by the Fabricator 23
4.6. The RFI Process 23
4.7. Erection Drawings 24

Section 5. Materials 25
5.1. Mill Materials 25
5.2. Stock Materials 26

Section 6. Shop Fabrication and Delivery 28
6.1. Identification of Material 28
6.2. Preparation of Material 29
6.3. Fitting and Fastening 29
6.4. Fabrication Tolerances 30
6.5. Shop Cleaning and Painting 33
6.6. Marking and Shipping of Materials 35

6.7. Delivery of Materials 35

Section 7. Erection 37
7.1. Method of Erection 37
7.2. Job-Site Conditions 37
7.3. Foundations, Piers and Abutments 37
7.4. Lines and Bench Marks 38
7.5. Installation of Anchor Rods, Foundation Bolts and Other Embedded Items 38
7.6. Installation of Bearing Devices 39
7.7. Grouting 40
7.8. Field Connection Material 40
7.9. Loose Material 41
7.10. Temporary Support of Structural Steel Frames 41
7.11. Safety Protection 44
7.12. Structural Steel Frame Tolerances 45
7.13. Erection Tolerances 46
7.14. Correction of Errors 56
7.15. Cuts, Alterations and Holes for Other Trades 56
7.16. Handling and Storage 56
7.17. Field Painting 57
7.18. Final Cleaning Up 57

Section 8. Quality Control 58
8.1. General 58
8.2. Inspection of Mill Material 59
8.3. Non-Destructive Testing 59
8.4. Surface Preparation and Shop Painting Inspection 59
8.5. Independent Inspection 59

Section 9. Contracts 61
9.1. Types of Contracts 61
9.2. Calculation of Weights 61
9.3. Revisions to the Contract Documents 62
9.4. Contract Price Adjustment 63
9.5. Scheduling 63
9.6. Terms of Payment 64

Section 10. Architecturally Exposed Structural Steel 65
10.1. General Requirements 65
10.2. Fabrication 65
10.3. Delivery of Materials 66
10.4. Erection 67

Appendix A. Digital Building Product Models 68

GLOSSARY

The following abbreviations and terms are used in this Code. Where used, terms are italicised to alert the user that the term is defined in this Glossary.

AASHTO. American Association of State Highway and Transportation Officials.

Adjustable Items. See Section 7.13.1.3.

AESS. See *architecturally exposed structural steel*.

AISC. American Institute of Steel Construction.

Anchor Bolt. See *anchor rod*.

Anchor Rod. A mechanical device that is either cast or drilled and chemically adhered, grouted or wedged into concrete and/or masonry for the purpose of the subsequent attachment of *structural steel*.

Anchor-Rod Group. A set of *anchor rods* that receives a single fabricated *structural steel* shipping piece.

ANSI. American National Standards Institute.

Architect. The entity that is professionally qualified and duly licensed to perform architectural services.

Architecturally Exposed Structural Steel. See Section 10.

AREMA. American Railway Engineering and Maintenance of Way Association.

ASME. American Society of Mechanical Engineers.

ASTM. American Society for Testing and Materials.

AWS. American Welding Society.

Bearing Devices. Shop-attached base and bearing plates, loose base and bearing plates and leveling devices, such as leveling plates, leveling nuts and washers and leveling screws.

CASE. Council of American Structural Engineers.

Clarification. An interpretation, of the *design drawings* or *specifications* that have been *released for construction*, made in response to an RFI or a note on an approval drawing and providing an explanation that neither revises the information that has been *released for construction* nor alters the cost or schedule of performance of the work.

the Code, this Code. This document, the AISC *Code of Standard Practice for Steel Buildings and Bridges* as adopted by the American Institute of Steel Construction.

Column line. The grid line of column centers set in the field based on the dimensions shown on the structural *design drawings* and using the building layout provided by the *owners designated representative for construction*. Column offsets are taken from the *column line*. The *column line* may be straight or curved as shown in the structural *design drawings*.

Connection. An assembly of one or more joints that is used to transmit forces between two or more members and/or connection elements.

Contract Documents. The documents that define the responsibilities of the parties that are involved in bidding, fabricating and erecting *structural steel*. These documents normally include the *design drawings*, the *specifications* and the contract.

Design Drawings. The graphic and pictorial portions of the *contract documents* showing the design, location and dimensions of the work. These documents generally include plans, elevations, sections, details, schedules, diagrams and notes.

Embedment Drawings. Drawings that show the location and placement of items that are installed to receive *structural steel*.

EOR, Engineer, Engineer of Record. See *structural engineer of record*.

Erection Bracing Drawings. Drawings that are prepared by the *erector* to illustrate the sequence of erection, any requirements for temporary supports and the requirements for raising, bolting and/or welding. These drawings are in addition to the *erection drawings*.

Erection Drawings. Field-installation or member-placement drawings that are prepared by the *fabricator* to show the location and attachment of the individual shipping pieces.

Erector. The entity that is responsible for the erection of the *structural steel*.

Established Column Line. The actual field line that is most representative of the erected column centers along a line of columns placed using the dimensions shown in the

structural *design drawings* and the lines and bench marks established by the *owner's designated representative for construction*, to be used in applying the erection tolerances given in this Code for column shipping pieces.

Fabricator. The entity that is responsible for fabricating the *structural steel*.

Hazardous Materials. Components, compounds or devices that are either encountered during the performance of the contract work or incorporated into it containing substances that, not withstanding the application of reasonable care, present a threat of harm to persons and/or the environment.

Inspector. The *owner's* testing and inspection agency.

MBMA. Metal Building Manufacturers Association.

Mill Material. Steel mill products that are ordered expressly for the requirements of a specific project.

Owner. The entity that is identified as such in the *contract documents*.

Owner's Designated Representative for Construction. The *owner* or the entity that is responsible to the *owner* for the overall construction of the project, including its planning, quality, and completion. This is usually the general contractor, the construction manager or similar authority at the job site.

Owner's Designated Representative for Design. The *owner* or the entity that is responsible to the *owner* for the overall structural design of the project, including the *structural steel* frame. This is usually the *structural engineer of record*.

Plans. See *design drawings*.

RCSC. Research Council on Structural Connections.

Released for Construction. The term that describes the status of *contract documents* that are in such a condition that the *fabricator* and the *erector* can rely upon them for the performance of their work, including the ordering of material and the preparation of *shop* and *erection drawings*.

Revision. An instruction or directive providing information that differs from information that has been *released for construction*. A *revision* may, but does not always, impact the cost or schedule of performance of the work.

RFI. A written request for information or clarification generated during the construction phase of the project.

SER. See *structural engineer of record*.

Shop Drawings. Drawings of the individual *structural steel* shipping pieces that are to be produced in the fabrication shop.

SJI. Steel Joist Institute.

Specifications. The portion of the *contract documents* that consists of the written requirements for materials, standards and workmanship.

SSPC. SSPC: The Society for Protective Coatings, which was formerly known as the Steel Structures Painting Council.

Standard Structural Shapes. Hot-rolled W-, S-, M- and HP-shapes, channels and angles listed in ASTM A6/A6M; structural tees split from the hot-rolled W-, S- and M-shapes listed in ASTM A6/A6M; hollow structural sections produced to ASTM A500, A501, A618 or A847; and, steel pipe produced to ASTM A53/A53M.

Steel Detailer. The entity that produces the *shop* and *erection drawings*.

Structural Engineer of Record. The licensed professional who is responsible for sealing the *contract documents*, which indicates that he or she has performed or supervised the analysis, design and document preparation for the structure and has knowledge of the load-carrying structural system.

Structural Steel. The elements of the structural frame as given in Section 2.1.

Substantiating Connection Information. Information submitted by the *fabricator*, if requested by the *owner's designated representative for design* in the *contract documents*, when option (2) or option (3) is designated for *connections* per Section 3.1.2.

Tier. The *structural steel* framing defined by a column shipping piece.

Weld Show-Through. In *architecturally exposed structural steel*, visual indication of the presence of a weld or welds on the side of the member opposite the weld.

CODE OF STANDARD PRACTICE FOR STEEL BUILDINGS AND BRIDGES

SECTION 1. GENERAL PROVISIONS

1.1. Scope

This Code sets forth criteria for the trade practices involved in steel buildings, bridges, and other structures, where other structures are defined as those structures designed, fabricated, and erected in a manner similar to buildings, with building-like vertical and lateral load resisting elements. In the absence of specific instructions to the contrary in the *contract documents*, the trade practices that are defined in this Code shall govern the fabrication and erection of *structural steel*.

Commentary:
The practices defined in this Code are the commonly accepted standards of custom and usage for *structural steel* fabrication and erection, which generally represent the most efficient approach. This Code is not intended to define a professional standard of care for the *owners designated representative for design*, change the duties and responsibilities of the *owner*, contractor, *architect* or *structural engineer of record* from those set forth in the *contract documents*, or assign to the *owner*, *architect* or *structural engineer of record* any duty or authority to undertake responsibility inconsistent with the provisions of the *contract documents*.

This Code is not applicable to steel joists or metal building systems, which are addressed by SJI and MBMA, respectively.

1.2. Referenced Specifications, Codes and Standards

The following documents are referenced in this Code:

AASHTO Specification—The 2010 AASHTO *LRFD Bridge Design Specifications*, 5th Edition.

AISC Seismic Provisions—AISC 341-10, the 2010 AISC *Seismic Provisions for Structural Steel Buildings*.

AISC Specification—AISC 360-10, the 2010 AISC *Specification for Structural Steel Buildings*.

ASME B46.1—ASME B46.1-02, Surface Texture (Surface Roughness, Waviness and Lay).

AREMA Specification—The 2010 AREMA *Manual for Railway Engineering, Volume II—Structures, Chapter 15*.

ASTM A6/A6M—09, *Standard Specification for General Requirements for Rolled Structural Steel Bars, Plates, Shapes, and Sheet Piling*.

ASTM A53/A53M—07, *Standard Specification for Pipe, Steel, Black and Hot-Dipped, Zinc-Coated, Welded and Seamless*.

ASTM A325—09, *Standard Specification for Structural Bolts, Steel, Heat Treated, 120/105 ksi Minimum Tensile Strength*.

ASTM A325M—09, *Standard Specification for High-Strength Bolts for Structural Steel Joints (Metric).*

ASTM A490—08b, *Standard Specification for Heat-Treated Steel Structural Bolts, 150 ksi Minimum Tensile Strength*.

ASTMA490M—08, *Standard Specification for High-Strength Steel Bolts, Classes 10.9 and 10.9.3, for Structural Steel Joints (Metric).*

ASTM A500/A500M—07, *Standard Specification for Cold-Formed Welded and Seamless Carbon Steel Structural Tubing in Rounds and Shapes*.

ASTM A501—07, *Standard Specification for Hot-Formed Welded and Seamless Carbon Steel Structural Tubing*. No metric equivalent exists.

ASTM A618/A618M—04, *Standard Specification for Hot-Formed Welded and Seamless High-Strength Low-Alloy Structural Tubing*.

ASTM A847/A847M—05, *Standard Specification for Cold-Formed Welded and Seamless High-Strength, Low-Alloy Structural Tubing with Improved Atmospheric Corrosion Resistance*.

ASTM F1852/F1852M—08, *Standard Specification for "Twist-Off" Type Tension Control Structural Bolt/Nut/Washer Assemblies, Steel, Heat Treated, 120/105 ksi Minimum Tensile Strength.*

AWS D1.1—The AWS D1.1 *Structural Welding Code—Steel*, 2008.

CASE Document 11—*An Agreement Between Structural Engineer of Record and Contractor for Transfer of Computer Aided Drafting (CAD) files on Electronic Media*, 2000

CASE Document 962—The *National Practice Guidelines for the Structural Engineer of Record*, Fourth Edition, 2000.

RCSC Specification—The *Specification for Structural Joints Using High-Strength Bolts*, 2009.

SSPC SP2—SSPC *Surface Preparation Specification No. 2, Hand Tool Cleaning*, 2004.

SSPC SP6—SSPC *Surface Preparation Specification No. 6, Commercial Blast Cleaning*, 2004.

1.3. Units

In this Code, the values stated in either U.S. customary units or metric units shall be used. Each system shall be used independently of the other.

Commentary:

In this Code, dimensions, weights and other measures are given in U.S. customary units with rounded or rationalized metric-unit equivalents in

brackets. Because the values stated in each system are not exact equivalents, the selective combination of values from each of the two systems is not permitted.

1.4. Design Criteria

For buildings and other structures, in the absence of other design criteria, the provisions in the AISC Specification shall govern the design of the *structural steel*. For bridges, in the absence of other design criteria, the provisions in the AASHTO Specification and AREMA Specification shall govern the design of the *structural steel*, as applicable.

1.5. Responsibility for Design

1.5.1. When the *owner's designated representative for design* provides the design, *design drawings* and *specifications*, the *fabricator* and the *erector* are not responsible for the suitability, adequacy or building-code conformance of the design.

1.5.2. When the *owner* enters into a direct contract with the *fabricator* to both design and fabricate an entire, completed steel structure, the *fabricator* shall be responsible for the suitability, adequacy, conformance with *owner*-established performance criteria, and building-code conformance of the *structural steel* design. The *owner* shall be responsible for the suitability, adequacy and building-code conformance of the non-*structural steel* elements and shall establish the performance criteria for the *structural steel* frame.

1.6. Patents and Copyrights

The entity or entities that are responsible for the specification and/or selection of proprietary structural designs shall secure all intellectual property rights necessary for the use of those designs.

1.7. Existing Structures

1.7.1. Demolition and shoring of any part of an existing structure are not within the scope of work that is provided by either the *fabricator* or the *erector*. Such demolition and shoring shall be performed in a timely manner so as not to interfere with or delay the work of the *fabricator* and the *erector*.

1.7.2. Protection of an existing structure and its contents and equipment, so as to prevent damage from normal erection processes, is not within the scope of work that is provided by either the *fabricator* or the *erector*. Such protection shall be performed in a timely manner so as not to interfere with or delay the work of the *fabricator* or the *erector*.

1.7.3. Surveying or field dimensioning of an existing structure is not within the scope of work that is provided by either the *fabricator* or the *erector*. Such surveying or field dimensioning, which is necessary for the completion of *shop* and *erection drawings* and fabrication, shall be performed and furnished to the *fabricator* in a timely manner so as not to interfere with or delay the work of the *fabricator* or the *erector*.

1.7.4. Abatement or removal of *hazardous materials* is not within the scope of work that is provided by either the *fabricator* or the *erector*. Such abatement or removal shall be performed in a timely manner so as not to interfere with or delay the work of the *fabricator* and the *erector*.

1.8. Means, Methods and Safety of Erection

1.8.1. The *erector* shall be responsible for the means, methods and safety of erection of the *structural steel* frame.

1.8.2. The *structural engineer of record* shall be responsible for the structural adequacy of the design of the structure in the completed project. The *structural engineer of record* shall not be responsible for the means, methods and safety of erection of the *structural steel* frame. See also Sections 3.1.4 and 7.10.

1.9. Tolerances

Tolerances for materials, fabrication and erection shall be as stipulated in Sections 5, 6, 7, and 10.

Commentary:
Tolerances are not necessarily specified in this Code for every possible variation that could be encountered. For most projects, where a tolerance is not specified or covered in this Code, it is not needed to ensure that the fabricated and erected *structural steel* complies with the requirements in Section 6 and 7. If a special design concept or system component requires a tolerance that is not specified in this Code, the necessary tolerance should be specified in the *contract documents*. If a tolerance is not shown and is deemed by the *fabricator* and/or *erector* to be important to the successful fabrication and erection of the *structural steel*, it should be requested from the *owner's designated representative for design*. The absence of a tolerance in this Code for a particular condition does not mean that the tolerance is zero; rather, it means that no tolerance has been established. In any case, the default tolerance is not zero.

SECTION 2. CLASSIFICATION OF MATERIALS

2.1. Definition of Structural Steel

Structural steel shall consist of the elements of the structural frame that are shown and sized in the structural *design drawings*, essential to support the design loads and described as:

Anchor rods that will receive *structural steel.*
Base plates, if part of the *structural steel* frame.
Beams, including built-up beams, if made from *standard structural shapes* and/or plates.
Bearing plates, if part of the *structural steel* frame.
Bearings of steel for girders, trusses or bridges.
Bracing, if permanent.
Canopy framing, if made from *standard structural shapes* and/or plates.
Columns, including built-up columns, if made from *standard structural shapes* and/or plates.
Connection materials for framing *structural steel* to *structural steel*.
Crane stops, if made from *standard structural shapes* and/or plates.
Door frames, if made from *standard structural shapes* and/or plates and if part of the *structural steel* frame.
Edge angles and plates, if attached to the *structural steel* frame or steel (open-web) joists.
Embedded *structural steel* parts, other than bearing plates, that will receive *structural steel*.
Expansion joints, if attached to the *structural steel* frame.
Fasteners for connecting *structural steel* items: permanent shop bolts, nuts and washers; shop bolts, nuts and washers for shipment; field bolts, nuts and washers for permanent *connections*; and, permanent pins.
Floor-opening frames, if made from *standard structural shapes* and/or plates and attached to the *structural steel* frame or steel (open-web) joists.
Floor plates (checkered or plain), if attached to the *structural steel* frame.
Girders, including built-up girders, if made from *standard structural shapes* and/or plates.
Girts, if made from *standard structural shapes*.
Grillage beams and girders.
Hangers, if made from *standard structural shapes*, plates and/or rods and framing *structural steel* to *structural steel*.
Leveling nuts and washers.
Leveling plates.
Leveling screws.
Lintels, if attached to the *structural steel* frame.
Marquee framing, if made from *standard structural shapes* and/or plates.

Machinery supports, if made from *standard structural shapes* and/or plates and attached to the *structural steel* frame.
Monorail elements, if made from *standard structural shapes* and/or plates and attached to the *structural steel* frame.
Posts, if part of the *structural steel* frame.
Purlins, if made from *standard structural shapes*.
Relieving angles, if attached to the *structural steel* frame.
Roof-opening frames, if made from *standard structural shapes* and/or plates and attached to the *structural steel* frame or steel (open-web) joists.
Roof-screen support frames, if made from *standard structural shapes*.
Sag rods, if part of the *structural steel* frame and connecting *structural steel* to *structural steel*.
Shear stud connectors, if specified to be shop attached.
Shims, if permanent.
Struts, if permanent and part of the *structural steel* frame.
Tie rods, if part of the *structural steel* frame.
Trusses, if made from *standard structural shapes* and/or built-up members.
Wall-opening frames, if made from *standard structural shapes* and/or plates and attached to the *structural steel* frame.
Wedges, if permanent.

Commentary:
The *fabricator* normally fabricates the items listed in Section 2.1. Such items must be shown, sized and described in the structural *design drawings*. Bracing includes vertical bracing for resistance to wind and seismic load and structural stability, horizontal bracing for floor and roof systems and permanent stability bracing for components of the *structural steel* frame.

2.2. Other Steel, Iron or Metal Items

Structural steel shall not include other steel, iron or metal items that are not generally described in Section 2.1, even where such items are shown in the structural *design drawings* or are attached to the *structural steel* frame. Other steel, iron or metal items include but are not limited to:

Base plates, if not part of the *structural steel* frame.
Bearing plates, if not part of the *structural steel* frame.
Bearings, if non-steel.
Cables for permanent bracing or suspension systems.
Castings.
Catwalks.
Chutes.
Cold-formed steel products.

Cold-rolled steel products, except those that are specifically covered in the AISC Specification.
Corner guards.
Crane rails, splices, bolts and clamps.
Crane stops, if not made from *standard structural shapes* or plates.
Door guards.
Embedded steel parts, other than bearing plates, that do not receive *structural steel* or that are embedded in precast concrete.
Expansion joints, if not attached to the *structural steel* frame.
Flagpole support steel.
Floor plates (checkered or plain), if not attached to the *structural steel* frame.
Forgings.
Gage-metal products.
Grating.
Handrail.
Hangers, if not made from *standard structural shapes*, plates and/or rods or not framing *structural steel* to *structural steel*.
Hoppers.
Items that are required for the assembly or erection of materials that are furnished by trades other than the *fabricator* or *erector*.
Ladders.
Lintels, if not attached to the *structural steel* frame.
Masonry anchors.
Miscellaneous metal.
Ornamental metal framing.
Pressure vessels.
Reinforcing steel for concrete or masonry.
Relieving angles, if not attached to the *structural steel* frame.
Roof screen support frames, if not made from *standard structural shapes*.
Safety cages.
Shear stud connectors, if specified to be field installed.
Stacks.
Stairs.
Steel deck.
Steel (open-web) joists.
Steel joist girders.
Tanks.
Toe plates.
Trench or pit covers.

Commentary:
Section 2.2 includes many items that may be furnished by the *fabricator* if contracted to do so by specific notation and detail in the *contract documents*.

When such items are contracted to be provided by the *fabricator*, coordination will normally be required between the *fabricator* and other material suppliers and trades. The provisions in this Code are not intended to apply to items in Section 2.2.

In previous editions of this Code, provisions regarding who should normally furnish field-installed shear stud connectors and cold-formed steel deck support angles were included in Section 7.8. These provisions have been eliminated since field-installed shear stud connectors and steel deck support angles are not defined as *structural steel* in this Code.

SECTION 3. DESIGN DRAWINGS AND SPECIFICATIONS

3.1. Structural Design Drawings and Specifications

Unless otherwise indicated in the *contract documents*, the structural *design drawings* shall be based upon consideration of the design loads and forces to be resisted by the *structural steel* frame in the completed project.

The structural *design drawings* shall clearly show the work that is to be performed and shall give the following information with sufficient dimensions to accurately convey the quantity and nature of the *structural steel* to be fabricated:

(a) The size, section, material grade and location of all members;
(b) All geometry and working points necessary for layout;
(c) Floor elevations;
(d) Column centers and offsets;
(e) The camber requirements for members;
(f) Joining requirements between elements of built-up members; and,
(g) The information that is required in Sections 3.1.1 through 3.1.6.

The *structural steel specifications* shall include any special requirements for the fabrication and erection of the *structural steel*.

The structural *design drawings*, *specifications* and addenda shall be numbered and dated for the purposes of identification.

Commentary:
Contract documents vary greatly in complexity and completeness. Nonetheless, the *fabricator* and the *erector* must be able to rely upon the accuracy and completeness of the *contract documents*. This allows the *fabricator* and the *erector* to provide the *owner* with bids that are adequate and complete. It also enables the preparation of the *shop* and *erection drawings*, the ordering of materials and the timely fabrication and erection of shipping pieces.

In some cases, the *owner* can benefit when reasonable latitude is allowed in the *contract documents* for alternatives that can reduce cost without compromising quality. However, critical requirements that are necessary to protect the *owner's* interest, that affect the integrity of the structure or that are necessary for the *fabricator* and the *erector* to proceed with their work must be included in the *contract documents*. Some examples of critical information may include, when applicable:

Standard specifications and codes that govern *structural steel* design and construction, including bolting and welding.
Material specifications.
Special material requirements to be reported on the material test reports.
Welded-joint configuration.

Weld-procedure qualification.
Special requirements for work of other trades.
Final disposition of backing bars and runoff tabs.
Lateral bracing.
Stability bracing.
Connections or data for *connection* selection and/or completion.
Restrictions on *connection* types.
Column stiffeners (also known as continuity plates).
Column web doubler plates.
Bearing stiffeners on beams and girders.
Web reinforcement.
Openings for other trades.
Surface preparation and shop painting requirements.
Shop and field inspection requirements.
Non-destructive testing requirements, including acceptance criteria.
Special requirements on delivery.
Special erection limitations.
Identification of non-*structural steel* elements that interact with the *structural steel* frame to provide for the lateral stability of the *structural steel* frame (see Section 3.1.4).
Column differential shortening information (see Commentary to Section 7.13).
Anticipated deflections and the associated loading conditions for major structural elements, such as transfer girders and trusses, supporting columns and hangers (see Commentary to Section 7.13).
Special fabrication and erection tolerances for AESS.
Special pay-weight provisions.

3.1.1. Permanent bracing, column stiffeners, column web doubler plates, bearing stiffeners in beams and girders, web reinforcement, openings for other trades and other special details, where required, shall be shown in sufficient detail in the structural *design drawings* so that the quantity, detailing and fabrication requirements for these items can be readily understood.

3.1.2. The *owner's designated representative for design* shall indicate one of the following options for each *connection*:

(1) The complete *connection* design shall be shown in the structural *design drawings*;
(2) In the structural *design drawings* or *specifications*, the *connection* shall be designated to be selected or completed by an experienced *steel detailer*; or,
(3) In the structural *design drawings* or *specifications*, the *connection* shall be designated to be designed by a licensed professional engineer working for the *fabricator*.

In all of the above options,

(a) The requirements of Section 3.1.1 shall apply; and,
(b) The approvals process in Section 4.4 shall be followed.

When option (2) above is specified, the experienced *steel detailer* shall utilize tables or schematic information provided in the structural *design drawings* in the selection or completion of the *connections*. When such information is not provided, tables in the AISC *Steel Construction Manual*, or other reference information as approved by the *owner's designated representative for design*, shall be used.

When option (2) or (3) above is specified, the *owner's designated representative for design* shall provide the following information in the structural *design drawings* and *specifications*:

(a) Any restrictions on the types of *connections* that are permitted;
(b) Data concerning the loads, including shears, moments, axial forces and transfer forces, that are to be resisted by the individual members and their *connections*, sufficient to allow the selection, completion, or design of the *connection* details while preparing the *shop* and *erection drawings*;
(c) Whether the data required in (b) is given at the service-load level or the factored-load level;
(d) Whether LRFD or ASD is to be used in the selection, completion, or design of *connection* details; and,
(e) What *substantiating connection information*, if any, is to be provided with the *shop* and *erection drawings* to the *owner's designated representative for design*.

When option (3) above is specified:

(a) The *fabricator* shall submit in a timely manner representative samples of the required *substantiating connection information* to the *owner's designated representatives for design* and *construction*. The *owner's designated representative for design* shall confirm in writing in a timely manner that these representative samples are consistent with the requirements in the *contract documents*, or shall advise what modifications are required to bring the representative samples into compliance with the requirements in the *contract documents*. This initial submittal and review is in addition to the requirements in Section 4.4.
(b) The licensed professional engineer in responsible charge of the *connection* design shall review and confirm in writing as part of the *substantiating connection information*, that the *shop* and *erection drawings* properly incorporate the *connection* designs. However, this review by the licensed

professional engineer in responsible charge of the *connection* design does not replace the approval process of the *shop* and *erection drawings* by the *owner's designated representative for design* in Section 4.4.

(c) The *fabricator* shall provide a means by which the *substantiating connection information* is referenced to the related *connections* on the *shop* and *erection drawings* for the purpose of review.

Commentary:
There are three options covered in Section 3.1.2:

(1) When the *owner's designated representative for design* shows the complete design of the *connections* in the structural *design drawings*, the following information is included:

(a) All weld types, sizes, and lengths;
(b) All bolt sizes, locations, quantities, and grades;
(c) All plate and angle sizes, thicknesses and dimensions; and,
(d) All work point locations and related information.

The intent of this approach is that complete design information necessary for detailing the *connection* is shown in the structural *design drawings*. Typical details are shown for each *connection* type, set of geometric parameters and adjacent framing conditions. The *steel detailer* will then be able to transfer this information to the *shop* and *erection drawings*, applying it to the individual pieces being detailed.

(2) When the *owner's designated representative for design* allows an experienced *steel detailer* to select or complete the *connections*, this is commonly done by referring to tables or schematic information in the structural *design drawings*, tables in the AISC *Steel Construction Manual*, or other reference information approved by the *owner's designated representative for design*, such as journal papers and recognized software output. Tables and schematic information in the structural *design drawings* should provide such information as weld types and sizes, plate thicknesses and quantities of bolts. However, there may be some geometry and dimensional information that the *steel detailer* must develop. The *steel detailer* will then configure the *connections* based upon the design loads and other information given in the structural *design drawings* and *specifications*.

The intent of this method is that the *steel detailer* will select the *connection* materials and configuration from the referenced tables or complete the specific *connection* configuration (e.g., dimensions, edge distances and bolt spacing) based upon the *connection* details that are shown in the structural *design drawings*.

The *steel detailer* must be experienced and familiar with the AISC requirements for *connection* configurations, the use of the *connection* tables in the AISC *Steel Construction Manual*, the calculation of dimensions and adaptation of typical *connection* details to similar situations. Notations of loadings in the structural *design drawings* are only to facilitate selection of the *connections* from the referenced tables. It is not the intent that this method be used when the practice of engineering is required.

(3) Option 3 reflects a practice in some areas of the U.S. to have a licensed professional engineer working for or retained by the *fabricator* design the *connections*, and recognizes the information required by the *fabricator* to do this work. The *owner's designated representative for design*, who has the knowledge of the structure as a whole, must review and approve the *shop* and *erection drawings*, and take such action on *substantiating connection information* as the *owner's designated representative for design* deems appropriate. See Section 4.4 for the approval process.

When, under Section 3.1.2, the *owner's designated representative for design* designates that *connections* be designed by a licensed professional engineer employed or retained by the *fabricator*, this work is incidental to, and part of, the overall means and methods of fabricating and constructing the steel frame. The licensed professional engineer performing the *connection* design is not providing a peer-review of the *contract documents*.

The *owner's designated representative for design* reviews the *shop* and *erection drawings* during the approvals process as specified in Section 4.4 for conformance with the specified criteria and compatibility with the design of the primary structure.

One of these options should be indicated for each *connection* in a project. It is acceptable to group *connection* types and utilize a combination of these options for the various *connection* types involved in a project. Option (3) is not normally specified for *connections* that can be selected or completed as noted in Option (2) without practicing engineering.

If there are any restrictions as to the types of *connections* to be used, it is required that these limitations be set forth in the structural *design drawings* and *specifications*. There are a variety of *connections* available in the AISC *Steel Construction Manual* for a given situation. Preference for a particular type will vary between *fabricators* and *erectors*. Stating these limitations, if any, in the structural *design drawings* and *specifications* will help to avoid repeated changes to the *shop* and *erection drawings* due to the selection of a *connection* that is not acceptable to the *owner's designated representative for design*, thereby avoiding additional cost and/or delay for the redrawing of the *shop* and *erection drawings*.

The structural *design drawings* must indicate the method of design used as LRFD or ASD. In order to conform to the spirit of the AISC

Specification, the *connections* must be selected using the same method and the corresponding references.

Substantiating connection information, when required, can take many forms. When option (2) is designated, *shop* and *erection drawings* may suffice with no additional *substantiating connection information* required. When option (3) is designated, the *substantiating connection information* may take the form of hand calculations and/or software output.

When *substantiating connection information* is required, it is recommended that representative samples of that information be agreed upon prior to preparation of *shop* and *erection drawings*, in order to avoid additional cost and/or delay for the *connection* redesign and/or redrawing that might otherwise result.

The *owner's designated representative for design* may require that the *substantiating connection information* be signed and sealed for option (3). The signing and sealing of the cover letter transmitting the *shop* and *erection drawings* and *substantiating connection information* may suffice. This signing and sealing indicates that a professional engineer performed the work but does not replace the approval process provided in Section 4.4.

A requirement to sign and seal each sheet of the *shop* and *erection drawings* is discouraged as it may serve to confuse the design responsibility between the *owner's designated representative for design* and the licensed professional engineer's work in performing the *connection* design.

3.1.3. When leveling plates are to be furnished as part of the contract requirements, their locations and required thickness and sizes shall be specified in the *contract documents*.

3.1.4. When the *structural steel* frame, in the completely erected and fully connected state, requires interaction with non-*structural steel* elements (see Section 2) for strength and/or stability, those non-*structural steel* elements shall be identified in the *contract documents* as required in Section 7.10.

Commentary:
Examples of non-*structural steel* elements include diaphragms made of steel deck, diaphragms made of concrete on steel deck and masonry and/or concrete shear walls.

3.1.5. When camber is required, the magnitude, direction and location of camber shall be specified in the structural *design drawings*.

Commentary:
For cantilevers, the specified camber may be up or down, depending upon the framing and loading.

3.1.6. Specific members or portions thereof that are to be left unpainted shall be identified in the *contract documents*. When shop painting is required, the painting requirements shall be specified in the *contract documents*, including the following information:

(a) The identification of specific members or portions thereof to be painted;
(b) The surface preparation that is required for these members;
(c) The paint specifications and manufacturer's product identification that are required for these members; and,
(d) The minimum dry-film shop-coat thickness that is required for these members.

Commentary:
Some members or portions thereof may be required to be left unpainted, such as those that will be in contact and acting compositely with concrete, or those that will receive spray-applied fire protection materials.

3.2. Architectural, Electrical and Mechanical Design Drawings and Specifications

All requirements for the quantities, sizes and locations of *structural steel* shall be shown or noted in the structural *design drawings*. The use of architectural, electrical and/or mechanical *design drawings* as a supplement to the structural *design drawings* is permitted for the purposes of defining detail configurations and construction information.

3.3. Discrepancies

When discrepancies exist between the *design drawings* and *specifications*, the *design drawings* shall govern. When discrepancies exist between scale dimensions in the *design drawings* and the figures written in them, the figures shall govern. When discrepancies exist between the structural *design drawings* and the architectural, electrical or mechanical *design drawings* or *design drawings* for other trades, the structural *design drawings* shall govern.

When a discrepancy is discovered in the *contract documents* in the course of the *fabricator's* work, the *fabricator* shall promptly notify the *owner's designated representative for construction* so that the discrepancy can be resolved by the *owner's designated representative for design*. Such resolution shall be timely so as not to delay the *fabricator's* work. See Sections 3.5 and 9.3.

Commentary:
While it is the *fabricator's* responsibility to report any discrepancies that are discovered in the *contract documents*, it is not the *fabricator's* responsibility to discover discrepancies, including those that are associated with the coordination

of the various design disciplines. The quality of the *contract documents* is the responsibility of the entities that produce those documents.

3.4. Legibility of Design Drawings

Design drawings shall be clearly legible and drawn to an identified scale that is appropriate to clearly convey the information.

Commentary:

Historically, the most commonly accepted scale for *structural steel* plans has been ⅛ in. per ft [10 mm per 1 000 mm]. There are, however, situations where a smaller or larger scale is appropriate. Ultimately, consideration must be given to the clarity of the drawing.

The scaling of the *design drawings* to determine dimensions is not an accepted practice for detailing the *shop* and *erection drawings*. However, it should be remembered when preparing *design drawings* that scaling may be the only method available when early-submission drawings are used to determine dimensions for estimating and bidding purposes.

3.5. Revisions to the Design Drawings and Specifications

Revisions to the *design drawings* and *specifications* shall be made either by issuing new *design drawings* and *specifications* or by reissuing the existing *design drawings* and *specifications*. In either case, all *revisions*, including *revisions* that are communicated through responses to RFIs or the annotation of *shop* and/or *erection drawings* (see Section 4.4.2), shall be clearly and individually indicated in the *contract documents*. The *contract documents* shall be dated and identified by *revision* number. Each *design drawings* shall be identified by the same drawing number throughout the duration of the project, regardless of the *revision*. See also Section 9.3.

Commentary:

Revisions to the *design drawings* and *specifications* can be made by issuing sketches and supplemental information separate from the *design drawings* and *specifications*. These sketches and supplemental information become amendments to the *design drawings* and *specifications* and are considered new *contract documents*. All sketches and supplemental information must be uniquely identified with a number and date as the latest instructions until such time as they may be superseded by new information.

When *revisions* are made by revising and re-issuing the existing structural *design drawings* and/or *specifications*, a unique *revision* number and date must be added to those documents to identify that information as the latest instructions until such time as they may be superseded by new information. The same unique drawing number must identify each *design drawings* throughout the duration of the project so that *revisions* can be properly tracked, thus

avoiding confusion and miscommunication among the various entities involved in the project.

When *revisions* are communicated through the annotation of *shop* or *erection drawings* or contractor submissions, such changes must be confirmed in writing by one of the aforementioned methods. This written confirmation is imperative to maintain control of the cost and schedule of a project and to avoid potential errors in fabrication.

3.6. Fast-Track Project Delivery

When the fast-track project delivery system is selected, release of the structural *design drawings* and *specifications* shall constitute a *release for construction*, regardless of the status of the architectural, electrical, mechanical and other interfacing designs and *contract documents*. Subsequent *revisions*, if any, shall be the responsibility of the *owner* and shall be made in accordance with Sections 3.5 and 9.3.

Commentary:

The fast-track project delivery system generally provides for a condensed schedule for the design and construction of a project. Under this delivery system, the *owner* elects to *release for construction* the structural *design drawings* and *specifications*, which may be partially complete, at a time that may precede the completion of and coordination with architectural, mechanical, electrical and other design work and *contract documents*. The release of these structural *design drawings* and *specifications* may also precede the release of the General Conditions and Division 1 Specifications.

Release of the structural *design drawings* and *specifications* to the *fabricator* for ordering of material constitutes a *release for construction*. Accordingly, the *fabricator* and the *erector* may begin their work based upon those partially complete documents. As the architectural, mechanical, electrical and other design elements of the project are completed, *revisions* may be required in design and/or construction. Thus, when considering the fast-track project delivery system, the *owner* should balance the potential benefits to the project schedule with the project cost contingency that may be required to allow for these subsequent *revisions*.

SECTION 4. SHOP AND ERECTION DRAWINGS

4.1. Owner Responsibility

The *owner* shall furnish, in a timely manner and in accordance with the *contract documents*, complete structural *design drawings* and *specifications* that have been *released for construction*. Unless otherwise noted, *design drawings* that are provided as part of a contract bid package shall constitute authorization by the *owner* that the *design drawings* are *released for construction*.

Commentary:

When the *owner* issues *design drawings* and *specifications* that are *released for construction*, the *fabricator* and the *erector* rely on the fact that these are the *owner's* requirements for the project. This release is required by the *fabricator* prior to the ordering of material and the preparation and completion of *shop* and *erection drawings*.

To ensure the orderly flow of material procurement, detailing, fabrication and erection activities, on phased construction projects, it is essential that designs are not continuously revised after they have been *released for construction*. In essence, once a portion of a design is *released for construction*, the essential elements of that design should be "frozen" to ensure adherence to the contract price and construction schedule. Alternatively, all parties should reach a common understanding of the effects of future changes, if any, as they affect scheduled deliveries and added costs.

A pre-detailing conference, held after the *structural steel* fabrication contract is awarded, can benefit the project. Typical attendees may include the *owner's designated representative for construction*, the *owner's designated representative for design*, the *fabricator*, the *steel detailer*, and the *erector*. Topics of the meeting should relate to the specifics of the project, and might include:

- Contract document review and general project overview, including clarifications of scope of work, tolerances, layouts and sequences, and special considerations.
- Detailing and coordination needs, such as bolting, welding, and *connection* considerations, constructability considerations, OSHA requirements, coordination with other trades, and the advanced bill of materials.
- The project communication system, including distribution of contact information for relevant parties to the contract, identification of the primary and alternate contacts in the general contractor's office, and the RFI system to be used on the project.
- The submittal schedule, including how many copies of documents are required, *connection* submittals, and identification of schedule-critical areas of the project, if any.

- Review of quality and inspection requirements, including the approvals process for corrective work.

Record of the meeting should be written and distributed to all parties. Subsequent meetings to discuss progress and issues that arise during construction also can be helpful, particularly when they are held on a regular schedule.

4.2. Fabricator Responsibility

Except as provided in Section 4.5, the *fabricator* shall produce *shop* and *erection drawings* for the fabrication and erection of the *structural steel* and is responsible for the following:

(a) The transfer of information from the *contract documents* into accurate and complete *shop* and *erection drawings*; and,
(b) The development of accurate, detailed dimensional information to provide for the fit-up of parts in the field.

Each *shop* and *erection drawing* shall be identified by the same drawing number throughout the duration of the project and shall be identified by *revision* number and date, with each specific *revision* clearly identified.

When the *fabricator* submits a request to change *connection* details that are described in the *contract documents*, the *fabricator* shall notify the *owner's designated representatives for design* and *construction* in writing in advance of the submission of the *shop* and *erection drawings*. The *owner's designated representative for design* shall review and approve or reject the request in a timely manner.

When requested to do so by the *owner's designated representative for design*, the *fabricator* shall provide to the *owner's designated representatives for design* and *construction* its schedule for the submittal of *shop* and *erection drawings* so as to facilitate the timely flow of information between all parties.

Commentary:

The *fabricator* is permitted to use the services of independent *steel detailers* to produce *shop* and *erection drawings*, and to perform other support services such as producing advanced bills of material and bolt summaries.

As the *fabricator* develops the detailed dimensional information for production of the *shop* and *erection drawings*, there may be discrepancies, missing information or conflicts discovered in the *contract documents*. See Section 3.3.

When the *fabricator* intends to make a submission of alternative *connection* details to those shown in the *contract documents*, the *fabricator* must notify the *owner's designated representatives for design* and *construction* in advance. This will allow the parties involved to plan for the increased effort

that may be required to review the alternative *connection* details. In addition, the *owner* will be able to evaluate the potential for cost savings and/or schedule improvements against the additional design cost for review of the alternative *connection* details by the *owner's designated representative for design*. This evaluation by the *owner* may result in the rejection of the alternative *connection* details or acceptance of the submission for review based upon cost savings, schedule improvements and/or job efficiencies.

The *owner's designated representative for design* may request the *fabricator's* schedule for the submittal of *shop* and *erection drawings*. This process is intended to allow the parties to plan for the staffing demands of the submission schedule. The *contract documents* may address this issue in more detail. In the absence of the requirement to provide this schedule, none need be provided.

When the *fabricator* provides a schedule for the submission of the *shop* and *erection drawings*, it must be recognized that this schedule may be affected by *revisions* and the response time to requests for missing information or the resolution of discrepancies.

4.3. Use of CAD Files and/or Copies of Design Drawings

The *fabricator* shall neither use nor reproduce any part of the *design drawings* as part of the *shop* or *erection drawings* without the written permission of the *owner's designated representative for design*. When CAD files or copies of the *design drawings* are made available for the *fabricator's* use, the *fabricator* shall accept this information under the following conditions:

(a) All information contained in the CAD files or copies of the *design drawings* shall be considered instruments of service of the *owner's designated representative for design* and shall not be used for other projects, additions to the project or the completion of the project by others. CAD files and copies of the *design drawings* shall remain the property of the *owner's designated representative for design* and in no case shall the transfer of these CAD files or copies of the *design drawings* be considered a sale.

(b) The CAD files or copies of the *design drawings* shall not be considered to be *contract documents*. In the event of a conflict between the *design drawings* and the CAD files or copies thereof, the *design drawings* shall govern;

(c) The use of CAD files or copies of the *design drawings* shall not in any way obviate the *fabricator's* responsibility for proper checking and coordination of dimensions, details, member sizes and fit-up and quantities of materials as required to facilitate the preparation of *shop* and *erection drawings* that are complete and accurate as required in Section 4.2; and,

(d) The *fabricator* shall remove information that is not required for the fabrication or erection of the *structural steel* from the CAD files or copies of the *design drawings*.

Commentary:
With the advent of electronic media and the internet, electronic copies of *design drawings* are readily available to the *fabricator*. As a result, the *owner's designated representative for design* may have reduced control over the unauthorized use of the *design drawings*. There are many copyright and other legal issues to be considered.

The *owner's designated representative for design* may choose to make CAD files or copies of the *design drawings* available to the *fabricator*, and may charge a service or licensing fee for this convenience. In doing so, a carefully negotiated agreement should be established to set out the specific responsibilities of both parties in view of the liabilities involved for both parties. For a sample contract, see CASE Document 11.

The CAD files and/or copies of the *design drawings* are provided to the *fabricator* for convenience only. The information therein should be adapted for use only in reference to the placement of *structural steel* members during erection. The *fabricator* should treat this information as if it were fully produced by the *fabricator* and undertake the same level of checking and quality assurance. When amendments or *revisions* are made to the *contract documents*, the *fabricator* must update this reference material.

When CAD files or copies of the *design drawings* are provided to the *fabricator*, they often contain other information, such as architectural backgrounds or references to other *contract documents*. This additional material should be removed when producing *shop* and *erection drawings* to avoid the potential for confusion.

4.4. Approval

Except as provided in Section 4.5, the *shop* and *erection drawings* shall be submitted to the *owner's designated representatives for design* and *construction* for review and approval. The *shop* and *erection drawings* shall be returned to the *fabricator* within 14 calendar days.

Final *substantiating connection information*, if any, shall also be submitted with the *shop* and *erection drawings*. The *owner's designated representative for design* is the final authority in the event of a disagreement between parties regarding *connection* design.

Approved *shop* and *erection drawings* shall be individually annotated by the *owner's designated representatives for design* and *construction* as either approved or approved subject to corrections noted. When so required, the *fabricator* shall subsequently make the corrections noted and furnish corrected *shop* and *erection drawings* to the *owner's designated representatives for design* and *construction*.

Commentary:

As used in this Code, the 14-day allotment for the return of *shop* and *erection drawings* is intended to represent the *fabricator's* portal-to-portal time. The intent in this Code is that, in the absence of information to the contrary in the *contract documents*, 14 days may be assumed for the purposes of bidding, contracting and scheduling. When additional time is desired, such as when *substantiating connection information* is part of the submittals, the modified allotment should be specified in the *contract documents.* A submittal schedule is commonly used to facilitate the approval process.

If a *shop* or *erection drawing* is approved subject to corrections noted, the *owner's designated representative for design* may or may not require that it be re-submitted for record purposes following correction. If a *shop* or *erection drawing* is not approved, revisions must be made and the drawing re-submitted until approval is achieved.

4.4.1. Approval of the *shop* and *erection drawings*, approval subject to corrections noted and similar approvals shall constitute the following:

(a) Confirmation that the *fabricator* has correctly interpreted the *contract documents* in the preparation of those submittals;
(b) Confirmation that the *owner's designated representative for design* has reviewed and approved the *connection* details shown on the *shop* and *erection drawings* and submitted in accordance with Section 3.1.2, if applicable; and,
(c) Release by the *owner's designated representatives for design* and *construction* for the *fabricator* to begin fabrication using the approved submittals.

Such approval shall not relieve the *fabricator* of the responsibility for either the accuracy of the detailed dimensions in the *shop* and *erection drawings* or the general fit-up of parts that are to be assembled in the field.

The *fabricator* shall determine the fabrication schedule that is necessary to meet the requirements of the contract.

Commentary:
When considering the current language in this Section, the Committee sought language that would parallel the practices of CASE. In CASE Document 962, CASE indicates that when the design of some element of the primary structural system is left to someone other than the *structural engineer of record*, "…such elements, including *connections* designed by others, should be reviewed by the *structural engineer of record*. He [or she] should review such designs and details, accept or reject them and be responsible for their effects on the primary structural system." Historically, this Code has embraced this same concept.

From the inception of this Code, AISC and the industry in general have recognized that only the *owner's designated representative for design* has all the

information necessary to evaluate the total impact of *connection* details on the overall structural design of the project. This authority traditionally has been exercised during the approval process for *shop* and *erection drawings*. The *owner's designated representative for design* has thus retained responsibility for the adequacy and safety of the entire structure since at least the 1927 edition of this Code.

4.4.2. Unless otherwise noted, any additions, deletions or *revisions* that are indicated in responses to RFIs or on the approved *shop* and *erection drawings* shall constitute authorization by the *owner* that the additions, deletions or *revisions* are *released for construction*. The *fabricator* and the *erector* shall promptly notify the *owner's designated representative for construction* when any direction or notation in responses to RFIs or on the *shop* or *erection drawings* or other information will result in an additional cost and/or a delay. See Sections 3.5 and 9.3.

Commentary:
When the *fabricator* notifies the *owner's designated representative for construction* that a direction or notation in responses to RFIs or on the *shop* or *erection drawings* will result in an additional cost or a delay, it is then normally the responsibility of the *owner's designated representative for construction* to subsequently notify the *owner's designated representative for design*.

4.5. Shop and/or Erection Drawings Not Furnished by the Fabricator

When the *shop* and *erection drawings* are not prepared by the *fabricator*, but are furnished by others, they shall be delivered to the *fabricator* in a timely manner. These *shop* and *erection drawings* shall be prepared, insofar as is practical, in accordance with the shop fabrication and detailing standards of the *fabricator*. The *fabricator* shall neither be responsible for the completeness or accuracy of *shop* and *erection drawings* so furnished, nor for the general fit-up of the members that are fabricated from them.

4.6. The RFI Process

When *requests for information* (RFIs) are issued, the process shall include the maintenance of a written record of inquiries and responses related to interpretation and implementation of the *contract documents*, including the *clarifications* and/or *revisions* to the *contract documents* that result, if any. RFIs shall not be used for the incremental *release for construction* of *design drawings*. When RFIs involve discrepancies or *revisions*, see Sections 3.3, 3.5, and 4.4.2.

Commentary:
The RFI process is most commonly used during the detailing process, but can also be used to forward inquiries by the *erector* or to inform the *owner's*

designated representative for design in the event of a *fabricator* or *erector* error and to develop corrective measures to resolve such errors.

The RFI process is intended to provide a written record of inquiries and associated responses but not to replace all verbal communication between the parties on the project. RFIs should be prepared and responded to in a timely fashion so as not to delay the work of the *steel detailer*, *fabricator*, and *erector*. Discussion of the RFI issues and possible solutions between the *fabricator*, *erector*, and *owner's designated representatives for design* and *construction* often can facilitate timely and practical resolution. Unlike *shop* and *erection drawing* submittals in Section 4.2, RFI response time can vary depending on the urgency of the issue, the amount of work required by the *owner's designated representatives for design* and *construction* to develop a complete response, and other circumstances such as building official approval.

RFIs should be prepared in a standardized format, including RFI number and date, identity of the author, reference to a specific *design drawing* number (and specific detail as applicable) or *specification* section, the needed response date, a description of a suggested solution (graphic depictions are recommended for more complex issues), and an indication of possible schedule and cost impacts. RFIs should be limited to one question each (unless multiple questions are interrelated to the same issue) to facilitate the resolution and minimize response time. Questions and proposed solutions presented in RFIs should be clear and complete. RFI responses should be equally clear and complete in the depictions of the solutions, and signed and dated by the responding party.

Unless otherwise noted, the *fabricator* and *erector* can assume that a response to an RFI constitutes a *release for construction*. However, if the response will result in an increase in cost or a delay in schedule, Section 4.4.2 requires that the *fabricator* and/or *erector* promptly inform the *owner's designated representatives for design* and *construction*.

4.7 Erection Drawings

Erection drawings shall be provided to the *erector* in a timely manner so as to allow the *erector* to properly plan and perform the work.

Commentary:
For planning purposes, this may include release of preliminary *erection drawings*, if requested by the *erector*.

SECTION 5. MATERIALS

5.1. Mill Materials

Unless otherwise noted in the *contract documents*, the *fabricator* is permitted to order the materials that are necessary for fabrication when the *fabricator* receives *contract documents* that have been *released for construction*.

Commentary:
The *fabricator* may purchase materials in stock lengths, exact lengths or multiples of exact lengths to suit the dimensions shown in the structural *design drawings*. Such purchases will normally be job-specific in nature and may not suitable for use on other projects or returned for full credit if subsequent design changes make these materials unsuitable for their originally intended use. The *fabricator* should be paid for these materials upon delivery from the mill, subject to appropriate additional payment or credit if subsequent unanticipated modification or reorder is required. Purchasing materials to exact lengths is not considered fabrication.

5.1.1. Unless otherwise specified by means of special testing requirements in the *contract documents*, mill testing shall be limited to those tests that are required for the material in the ASTM specifications indicated in the *contract documents*. Materials ordered to special material requirements shall be marked by the supplier as specified in ASTM A6/A6M Section 12 prior to delivery to the *fabricator's* shop or other point of use. Such material not so marked by the supplier, shall not be used until:

(a) Its identification is established by means of testing in accordance with the applicable ASTM specifications; and,
(b) A *fabricator's* identification mark, as described in Section 6.1.2 and 6.1.3, has been applied.

5.1.2. When *mill material* does not satisfy ASTM A6/A6M tolerances for camber, profile, flatness or sweep, the *fabricator* shall be permitted to perform corrective procedures, including the use of controlled heating and/or mechanical straightening, subject to the limitations in the AISC Specification.

Commentary:
Mill dimensional tolerances are completely set forth in ASTM A6/A6M. Normal variations in the cross-sectional geometry of *standard structural shapes* must be recognized by the designer, the *fabricator*, the *steel detailer*, and the *erector* (for example, see Figure C–5.1). Such tolerances are mandatory because roll wear, thermal distortions of the hot cross-section immediately after leaving the forming rolls and differential cooling distortions that take place on the cooling beds are all unavoidable. Geometric perfection of the cross-section is

not necessary for either structural or architectural reasons, if the tolerances are recognized and provided for.

ASTM A6/A6M also stipulates tolerances for straightness that are adequate for typical construction. However, these characteristics may be controlled or corrected to closer tolerances during the fabrication process when the added cost is justified by the special requirements for an atypical project.

5.1.3. When variations that exceed ASTM A6/A6M tolerances are discovered or occur after the receipt of *mill material* the *fabricator* shall, at the *fabricator's* option, be permitted to perform the ASTM A6/A6M corrective procedures for mill reconditioning of the surface of *structural steel* shapes and plates.

5.1.4. When special tolerances that are more restrictive than those in ASTM A6/A6M are required for *mill materials*, such special tolerances shall be specified in the *contract documents*. The *fabricator* shall, at the *fabricator's* option, be permitted to order material to ASTM A6/A6M tolerances and subsequently perform the corrective procedures described in Sections 5.1.2 and 5.1.3.

5.2. Stock Materials

5.2.1. If used for structural purposes, materials that are taken from stock by the *fabricator* shall be of a quality that is at least equal to that required in the ASTM specifications indicated in the *contract documents*.

5.2.2. Material test reports shall be accepted as sufficient record of the quality of materials taken from stock by the *fabricator*. The *fabricator* shall review and retain the material test reports that cover such stock materials. However, the *fabricator* need not maintain records that identify individual pieces of stock material against individual material test reports, provided the *fabricator* purchases stock materials that meet the requirements for material grade and quality in the applicable ASTM specifications.

5.2.3. Stock materials that are purchased under no particular specification, under a specification that is less rigorous than the applicable ASTM specifications or without material test reports or other recognized test reports shall not be used without the approval of the *owner's designated representative for design*.

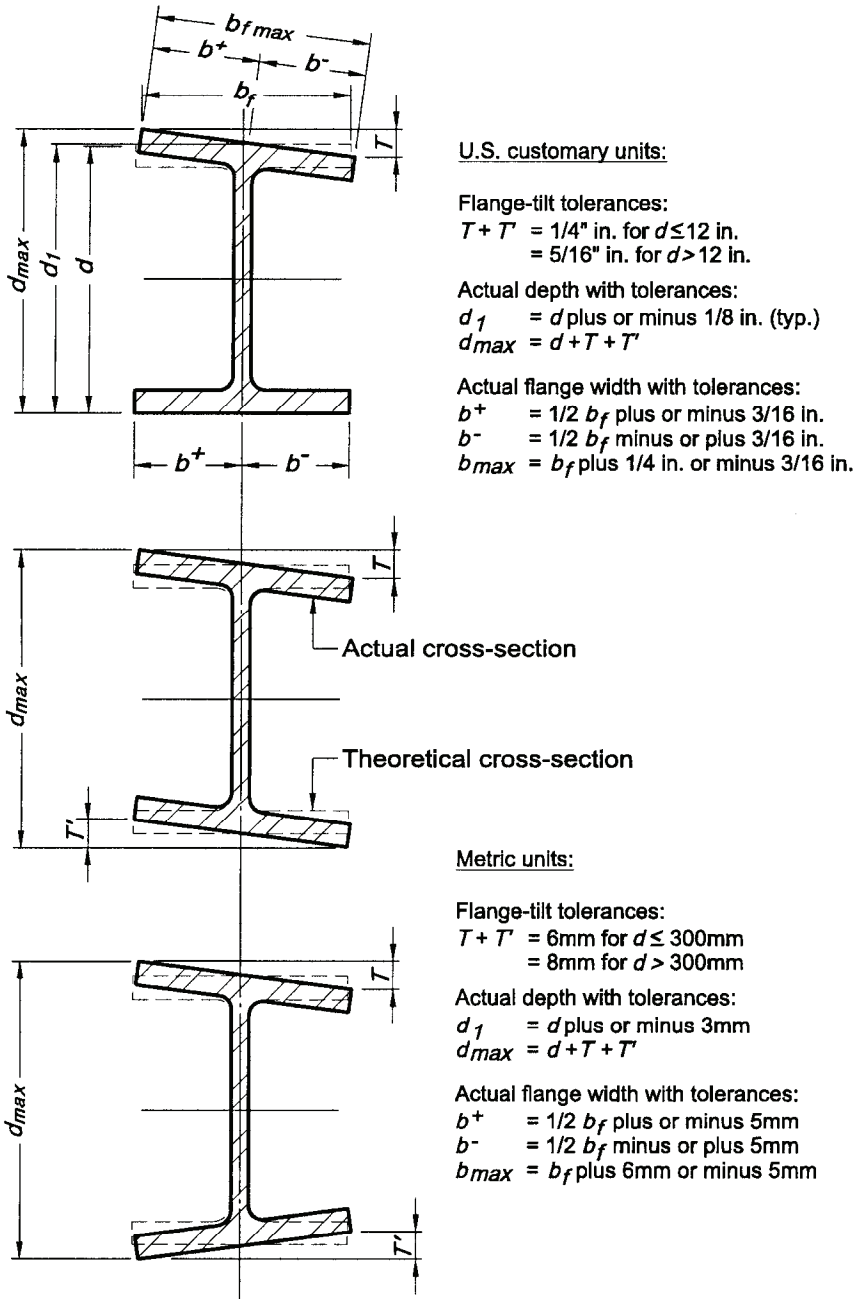

Figure C-5.1. Mill tolerances on the cross-section of a W-shape.

SECTION 6. SHOP FABRICATION AND DELIVERY

6.1. Identification of Material

6.1.1. The *fabricator* shall be able to demonstrate by written procedure and actual practice a method of material identification, visible up to the point of assembling members as follows:

(a) For shop-standard material, identification capability shall include shape designation. Representative material test reports shall be furnished by the *fabricator* if requested to do so by the *owner's designated representative for design*, either in the *contract documents* or in separate written instructions given to the *fabricator* prior to ordering *mill materials*.
(b) For material of grade other than shop-standard material, identification capability shall include shape designation and material grade. Representative material test reports shall be furnished by the *fabricator* if requested to do so by the *owner's designated representative for design*, either in the *contract documents* or in separate written instructions given to the *fabricator* prior to ordering *mill materials*.
(c) For material ordered in accordance with an ASTM supplement or other special material requirements in the *contract documents*, identification capability shall include shape designation, material grade, and heat number. The corresponding material test reports shall be furnished by the *fabricator* if requested to do so by the *owner's designated representative for design*, either in the *contract documents* or in separate written instructions given to the *fabricator* prior to ordering *mill materials*.

Unless an alternative system is established in the *fabricator's* written procedures, shop-standard material shall be as follows:

Material	**Shop-standard material grade**
W and WT	ASTM A992
M, S, MT and ST	ASTM A36
HP	ASTM A36
L	ASTM A36
C and MC	ASTM A36
HSS	ASTM A500 grade B
Steel Pipe	ASTM A53 grade B
Plates and Bars	ASTM A36

Commentary:
The requirements in Section 6.1.1(a) will suffice for most projects. When material is of a strength level that differs from the shop-standard grade, the requirements in Section 6.1.1(b) apply. When special material requirements

apply, such as ASTM A6/A6M supplement S5 or S30 for CVN testing, ASTM A6/A6M supplement S8 for ultrasonic testing, or ASTM A588/A588M for atmospheric corrosion resistance, the requirements in Section 6.1.1(c) are applicable.

6.1.2. During fabrication, up to the point of assembling members, each piece of material that is ordered to special material requirements shall carry a *fabricator's* identification mark or an original supplier's identification mark. The *fabricator's* identification mark shall be in accordance with the *fabricator's* established material identification system, which shall be on record and available prior to the start of fabrication for the information of the *owner's designated representative for construction*, the building-code authority and the *inspector*.

6.1.3. Members that are made of material that is ordered to special material requirements shall not be given the same assembling or erection mark as members made of other material, even if they are of identical dimensions and detail.

6.2. Preparation of Material

6.2.1. The thermal cutting of *structural steel* by hand-guided or mechanically guided means is permitted.

6.2.2. Surfaces that are specified as "finished" in the *contract documents* shall have a roughness height value measured in accordance with ASME B46.1 that is equal to or less than 500 μin. The use of any fabricating technique that produces such a finish is permitted.

Commentary:
Most cutting processes, including friction sawing and cold sawing, and milling processes meet a surface roughness limitation of 500 μin per ASME B46.1.

6.3. Fitting and Fastening

6.3.1. Projecting elements of *connection* materials need not be straightened in the connecting plane, subject to the limitations in the AISC Specification.

6.3.2. Backing bars and runoff tabs shall be used in accordance with AWS D1.1 as required to produce sound welds. The *fabricator* or *erector* need not remove backing bars or runoff tabs unless such removal is specified in the *contract documents*. When the removal of backing bars is specified in the *contract documents*, such removal shall meet the requirements in AWS D1.1. When the removal of runoff tabs is specified in the *contract documents*, hand flame-

cutting close to the edge of the finished member with no further finishing is permitted, unless other finishing is specified in the *contract documents*.

Commentary:
In most cases, the treatment of backing bars and runoff tabs is left to the discretion of the o*wner's designated representative for design*. In some cases, treatment beyond the basic cases described in this Section may be required. As one example, special treatment is required for backing bars and runoff tabs in beam-to-column moment *connections* when the requirements in the AISC Seismic Provisions must be met. In all cases, the o*wner's designated representative for design* should specify the required treatments in the *contract documents*.

6.3.3. Unless otherwise noted in the *shop drawings*, high-strength bolts for shop-attached *connection* material shall be installed in the shop in accordance with the requirements in the AISC Specification.

6.4. Fabrication Tolerances

The tolerances on *structural steel* fabrication shall be in accordance with the requirements in Section 6.4.1 through 6.4.6.

Commentary:
Fabrication tolerances are stipulated in several specifications and codes, each applicable to a specialized area of construction. Basic fabrication tolerances are stipulated in this Section. For *architecturally exposed structural steel*, see Section 10. Other specifications and codes are also commonly incorporated by reference in the *contract documents*, such as the AISC Specification, the RCSC Specification, AWS D1.1, and the AASHTO Specification.

6.4.1. For members that have both ends finished (see Section 6.2.2) for contact bearing, the variation in the overall length shall be equal to or less than 1/32 in. [1 mm]. For other members that frame to other *structural steel* elements, the variation in the detailed length shall be as follows:

(a) For members that are equal to or less than 30 ft [9 000 mm] in length, the variation shall be equal to or less than 1/16 in. [2 mm].
(b) For members that are greater than 30 ft [9 000 mm] in length, the variation shall be equal to or less than 1/8 in. [3 mm].

6.4.2. For straight structural members other than compression members, whether of a single *standard structural shape* or built-up, the variation in straightness shall be equal to or less than that specified for wide-flange shapes in ASTM A6/A6M, except when a smaller variation in straightness is specified in the *contract documents*. For straight compression members, whether of a *standard*

structural shape or built-up, the variation in straightness shall be equal to or less than 1/1000 of the axial length between points that are to be laterally supported. For curved structural members, the variation from the theoretical curvature shall be equal to or less than the variation in sweep that is specified for an equivalent straight member of the same straight length in ASTM A6/A6M.

In all cases, completed members shall be free of twists, bends and open joints. Sharp kinks or bends shall be cause for rejection.

6.4.3. For beams that are detailed without specified camber, the member shall be fabricated so that, after erection, any incidental camber due to rolling or shop fabrication is upward. For trusses that are detailed without specified camber, the components shall be fabricated so that, after erection, any incidental camber in the truss due to rolling or shop fabrication is upward.

6.4.4. For beams that are specified in the *contract documents* with camber, beams received by the *fabricator* with 75% of the specified camber shall require no further cambering. Otherwise, the variation in camber shall be as follows:

(a) For beams that are equal to or less than 50 ft [15 000 mm] in length, the variation shall be equal to or less than minus zero / plus ½ in. [13 mm].
(b) For beams that are greater than 50 ft [15 000 mm] in length, the variation shall be equal to or less than minus zero / plus ½ in. plus ⅛ in. for each 10 ft or fraction thereof [13 mm plus 3 mm for each 3 000 mm or fraction thereof] in excess of 50 ft [15 000 mm] in length.

For the purpose of inspection, camber shall be measured in the *fabricator's* shop in the unstressed condition.

Commentary:
There is no known way to inspect beam camber after the beam is received in the field because of factors that include:

(a) The release of stresses in members over time and in varying applications;
(b) The effects of the dead weight of the member;
(c) The restraint caused by the end *connections* in the erected state; and,
(d) The effects of additional dead load that may ultimately be intended to be applied, if any.

Therefore, inspection of the *fabricator's* work on beam camber must be done in the fabrication shop in the unstressed condition.

6.4.5. For fabricated trusses that are specified in the *contract documents* with camber, the variation in camber at each specified camber point shall be equal to or less than plus or minus 1/800 of the distance to that point from the nearest point of

support. For the purpose of inspection, camber shall be measured in the *fabricator's* shop in the unstressed condition. For fabricated trusses that are specified in the *contract documents* without indication of camber, the foregoing requirements shall be applied at each panel point of the truss with a zero camber ordinate.

Commentary:
There is no known way to inspect truss camber after the truss is received in the field because of factors that include:

(a) The effects of the dead weight of the member;
(b) The restraint caused by the truss *connections* in the erected state; and,
(c) The effects of additional dead load that may ultimately be intended to be applied, if any.

Therefore, inspection of the *fabricator's* work on truss camber must be done in the fabrication shop in the unstressed condition. See Figure C–6.1.

6.4.6. When permissible variations in the depths of beams and girders result in abrupt changes in depth at splices, such deviations shall be accounted for as follows:

(a) For splices with bolted joints, the variations in depth shall be taken up with filler plates; and,
(b) For splices with welded joints, the weld profile shall be adjusted to conform to the variations in depth, the required cross-section of weld shall be provided and the slope of the weld surface shall meet the requirements in AWS D1.1.

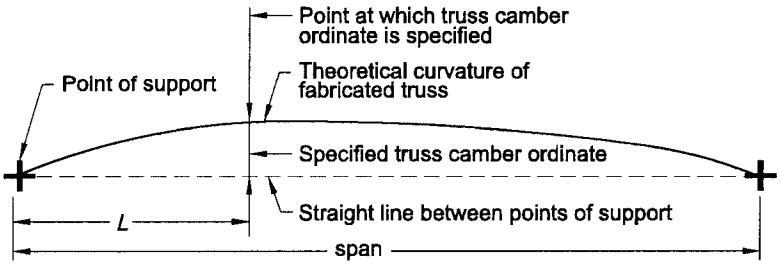

Figure C-6.1. Illustration of the tolerance on camber for fabricated trusses with specified camber.

6.5. Shop Cleaning and Painting (see also Section 3.1.6)

Structural steel that does not require shop paint shall be cleaned of oil and grease with solvent cleaners, and of dirt and other foreign material by sweeping with a fiber brush or other suitable means. For *structural steel* that is required to be shop painted, the requirements in Sections 6.5.1 through 6.5.4 shall apply.

Commentary:

Extended exposure of unpainted *structural steel* that has been cleaned for the subsequent application of fire protection materials can be detrimental to the fabricated product. Most levels of cleaning require the removal of all loose mill scale, but permit some amount of tightly adhering mill scale. When a piece of *structural steel* that has been cleaned to an acceptable level is left exposed to a normal environment, moisture can penetrate behind the scale, and some "lifting" of the scale by the oxidation process is to be expected. Cleanup of "lifted" mill scale is not the responsibility of the *fabricator*, but is to be assigned by contract requirement to an appropriate contractor.

Section 6.5.4 of this Code is not applicable to weathering steel, for which special cleaning specifications are always required in the *contract documents*.

6.5.1. The *fabricator* is not responsible for deterioration of the shop coat that may result from exposure to ordinary atmospheric conditions or corrosive conditions that are more severe than ordinary atmospheric conditions.

Commentary:

The shop coat of paint is the prime coat of the protective system. It is intended as protection for only a short period of exposure in ordinary atmospheric conditions, and is considered a temporary and provisional coating.

6.5.2. Unless otherwise specified in the *contract documents*, the *fabricator* shall, as a minimum, hand clean the *structural steel* of loose rust, loose mill scale, dirt and other foreign matter, prior to painting, by means of wire brushing or by other methods elected by the *fabricator*, to meet the requirements of SSPC-SP2. If the *fabricator's* workmanship on surface preparation is to be inspected by the *inspector*, such inspection shall be performed in a timely manner prior to the application of the shop coat.

Commentary:

The selection of a paint system is a design decision involving many factors including:

(a) The *owner's* preference;
(b) The service life of the structure;
(c) The severity of environmental exposure;

(d) The cost of both initial application and future renewals; and,
(e) The compatibility of the various components that comprise the paint system (surface preparation, shop coat and subsequent coats).

Because the inspection of shop painting must be concerned with workmanship at each stage of the operation, the *fabricator* provides notice of the schedule of operations and affords the *inspector* access to the work site. Inspection must then be coordinated with that schedule so as to avoid delay of the scheduled operations.

Acceptance of the prepared surface must be made prior to the application of the shop coat because the degree of surface preparation cannot be readily verified after painting. Time delay between surface preparation and the application of the shop coat can result in unacceptable deterioration of a properly prepared surface, necessitating a repetition of surface preparation. This is especially true with blast-cleaned surfaces. Therefore, to avoid potential deterioration of the surface, it is assumed that surface preparation is accepted unless it is inspected and rejected prior to the scheduled application of the shop coat.

The shop coat in any paint system is designed to maximize the wetting and adherence characteristics of the paint, usually at the expense of its weathering capabilities. Deterioration of the shop coat normally begins immediately after exposure to the elements and worsens as the duration of exposure is extended. Consequently, extended exposure of the shop coat will likely lead to its deterioration and may necessitate repair, possibly including the repetition of surface preparation and shop coat application in limited areas. With the introduction of high-performance paint systems, avoiding delay in the application of the shop coat has become more critical. High-performance paint systems generally require a greater degree of surface preparation, as well as early application of weathering protection for the shop coat.

Since the *fabricator* does not control the selection of the paint system, the compatibility of the various components of the total paint system, or the length of exposure of the shop coat, the *fabricator* cannot guarantee the performance of the shop coat or any other part of the system. Instead, the *fabricator* is responsible only for accomplishing the specified surface preparation and for applying the shop coat (or coats) in accordance with the *contract documents*.

This Section stipulates that the *structural steel* is to be cleaned to meet the requirements in SSPC-SP2. This stipulation is not intended to represent an exclusive cleaning level, but rather the level of surface preparation that will be furnished unless otherwise specified in the *contract documents* if the *structural steel* is to be painted.

6.5.3. Unless otherwise specified in the *contract documents*, paint shall be applied by brushing, spraying, rolling, flow coating, dipping or other suitable means, at the

election of the *fabricator*. When the term "shop coat", "shop paint" or other equivalent term is used with no paint system specified, the *fabricator's* standard shop paint shall be applied to a minimum dry-film thickness of one mil [25 μm].

6.5.4. Touch-up of abrasions caused by handling after painting shall be the responsibility of the contractor that performs touch-up in the field or field painting.

Commentary:
Touch-up in the field and field painting are not normally part of the *fabricator's* or the *erector's* contract.

6.6. Marking and Shipping of Materials

6.6.1. Unless otherwise specified in the *contract documents*, erection marks shall be applied to the *structural steel* members by painting or other suitable means.

6.6.2. Bolt assemblies and loose bolts, nuts and washers shall be shipped in separate closed containers according to length and diameter, as applicable. Pins and other small parts and packages of bolts, nuts and washers shall be shipped in boxes, crates, kegs or barrels. A list and description of the material shall appear on the outside of each closed container.

Commentary:
In most cases bolts, nuts and other components in a fastener assembly can be shipped loose in separate containers. However, ASTM F1852/F1852M twist-off-type tension-control bolt assemblies and galvanized ASTM A325, A325M and F1852/F1852M bolt assemblies must be assembled and shipped in the same container according to length and diameter.

6.7. Delivery of Materials

6.7.1. Fabricated *structural steel* shall be delivered in a sequence that will permit efficient and economical fabrication and erection, and that is consistent with requirements in the *contract documents*. If the *owner* or *owner's designated representative for construction* wishes to prescribe or control the sequence of delivery of materials, that entity shall specify the required sequence in the *contract documents*. If the *owner's designated representative for construction* contracts separately for delivery and for erection, the *owner's designated representative for construction* shall coordinate planning between contractors.

6.7.2. *Anchor rods*, washers, nuts and other anchorage or grillage materials that are to be built into concrete or masonry shall be shipped so that they will be available when needed. The *owner's designated representative for construction* shall

allow the *fabricator* sufficient time to fabricate and ship such materials before they are needed.

6.7.3. If any shortage is claimed relative to the quantities of materials that are shown in the shipping statements, the *owner's designated representative for construction* or the *erector* shall promptly notify the *fabricator* so that the claim can be investigated.

Commentary:
The quantities of material that are shown in the shipping statement are customarily accepted as correct by the *owner's designated representative for construction*, the *fabricator* and the *erector*.

6.7.4. Unless otherwise specified in the *contract documents*, and subject to the approved *shop* and *erection drawings*, the *fabricator* shall limit the number of field splices to that consistent with minimum project cost.

Commentary:
This Section recognizes that the size and weight of *structural steel* assemblies may be limited by shop capabilities, the permissible weight and clearance dimensions of available transportation or job-site conditions.

6.7.5. If material arrives at its destination in damaged condition, the receiving entity shall promptly notify the *fabricator* and carrier prior to unloading the material, or promptly upon discovery prior to erection.

SECTION 7. ERECTION

7.1. Method of Erection

Fabricated *structural steel* shall be erected using methods and a sequence that will permit efficient and economical performance of erection, and that is consistent with the requirements in the *contract documents*. If the *owner* or *owner's designated representative for construction* wishes to prescribe or control the method and/or sequence of erection, or specifies that certain members cannot be erected in their normal sequence, that entity shall specify the required method and sequence in the *contract documents*. If the *owner's designated representative for construction* contracts separately for fabrication services and for erection services, the *owner's designated representative for construction* shall coordinate planning between contractors.

Commentary:
Design modifications are sometimes requested by the *erector* to allow or facilitate the erection of the *structural steel* frame. When this is the case, the *erector* should notify the *fabricator* prior to the preparation of *shop* and *erection drawings* so that the *fabricator* may refer the *erector's* request to the *owner's designated representatives for design and construction* for resolution.

7.2. Job-Site Conditions

The *owner's designated representative for construction* shall provide and maintain the following for the *fabricator* and the *erector*:

(a) Adequate access roads into and through the job site for the safe delivery and movement of the material to be erected and of derricks, cranes, trucks and other necessary equipment under their own power;
(b) A firm, properly graded, drained, convenient and adequate space at the job site for the operation of the *erector's* equipment, free from overhead obstructions, such as power lines, telephone lines or similar conditions; and,
(c) Adequate storage space, when the structure does not occupy the full available job site, to enable the *fabricator* and the *erector* to operate at maximum practical speed.

Otherwise, the *owner's designated representative for construction* shall inform the *fabricator* and the *erector* of the actual job-site conditions and/or special delivery requirements prior to bidding.

7.3. Foundations, Piers and Abutments

The accurate location, strength and suitability of, and access to, all foundations, piers and abutments shall be the responsibility of the *owner's designated representative for construction*.

7.4. Lines and Bench Marks

The *owner's designated representative for construction* shall be responsible for the accurate location of lines and benchmarks at the job site and shall furnish the *erector* with a plan that contains all such information. The *owner's designated representative for construction* shall establish offset lines and reference elevations at each level for the *erector's* use in the positioning of *adjustable items* (see Section 7.13.1.3), if any.

7.5. Installation of Anchor Rods, Foundation Bolts and Other Embedded Items

7.5.1. *Anchor rods*, foundation bolts and other embedded items shall be set by the *owner's designated representative for construction* in accordance with *embedment drawings* that have been approved by the *owner's designated representatives for design and construction*. The variation in location of these items from the dimensions shown in the *embedment drawings* shall be as follows:

(a) The variation in dimension between the centers of any two *anchor rods* within an *anchor-rod group* shall be equal to or less than ⅛ in. [3 mm].
(b) The variation in dimension between the centers of adjacent *anchor-rod groups* shall be equal to or less than ¼ in. [6 mm].
(c) The variation in elevation of the tops of *anchor rods* shall be equal to or less than plus or minus ½ in. [13 mm].
(d) The accumulated variation in dimension between centers of *anchor-rod groups* along the *column line* through multiple *anchor-rod groups* shall be equal to or less than ¼ in. per 100 ft [2 mm per 10 000 mm], but not to exceed a total of 1 in. [25 mm].
(e) The variation in dimension from the center of any *anchor-rod group* to the *column line* through that group shall be equal to or less than ¼ in. [6 mm].

The tolerances that are specified in (b), (c) and (d) shall apply to offset dimensions shown in the structural *design drawings*, measured parallel and perpendicular to the nearest *column line*, for individual columns that are shown in the structural *design drawings* as offset from *column lines*.

Commentary:
The tolerances established in this Section have been selected for compatibility with the holes sizes that are recommended for base plates in the AISC *Steel Construction Manual*. If special conditions require more restrictive tolerances, the contractor responsible for setting the *anchor rods* should be so informed in the *contract documents*. When the *anchor rods* are set in sleeves, the adjustment provided may be used to satisfy the required *anchor-rod* setting tolerances.

7.5.2. Unless otherwise specified in the *contract documents*, *anchor rods* shall be set with their longitudinal axis perpendicular to the theoretical bearing surface.

7.5.3. Embedded items and *connection* materials that are part of the work of other trades, but that will receive *structural steel*, shall be located and set by the *owner's designated representative for construction* in accordance with an approved *embedment drawing*. The variation in location of these items shall be limited to a magnitude that is consistent with the tolerances that are specified in Section 7.13 for the erection of the *structural steel*.

7.5.4. All work that is performed by the *owner's designated representative for construction* shall be completed so as not to delay or interfere with the work of the *fabricator* and the *erector*. The *owner's designated representative for construction* shall conduct a survey of the as-built locations of *anchor rods*, foundation bolts and other embedded items, and shall verify that all items covered in Section 7.5 meet the corresponding tolerances. When corrective action is necessary, the *owner's designated representative for construction* shall obtain the guidance and approval of the *owner's designated representative for design*.

Commentary:
Few *fabricators* or *erectors* have the capability to provide this survey. Under standard practice, it is the responsibility of others.

7.6. Installation of Bearing Devices

All leveling plates, leveling nuts and washers and loose base and bearing plates that can be handled without a derrick or crane are set to line and grade by the *owner's designated representative for construction*. Loose base and bearing plates that require handling with a derrick or crane shall be set by the *erector* to lines and grades established by the *owner's designated representative for construction*. The *fabricator* shall clearly scribe loose base and bearing plates with lines or other suitable marks to facilitate proper alignment.

Promptly after the setting of *bearing devices*, the *owner's designated representative for construction* shall check them for line and grade. The variation in elevation relative to the established grade for all *bearing devices* shall be equal to or less than plus or minus ⅛ in. [3 mm]. The final location of *bearing devices* shall be the responsibility of the *owner's designated representative for construction*.

Commentary:
The ⅛ in. [3 mm] tolerance on elevation of *bearing devices* relative to established grades is provided to permit some variation in setting *bearing devices*, and to account for the accuracy that is attainable with standard surveying instruments. The use of leveling plates larger than 22 in. by 22 in.

[550 mm by 550 mm] is discouraged and grouting is recommended with larger sizes. For the purposes of erection stability, the use of leveling nuts and washers is discouraged when base plates have less than four *anchor rods*.

7.7. Grouting

Grouting shall be the responsibility of the *owner's designated representative for construction*. Leveling plates and loose base and bearing plates shall be promptly grouted after they are set and checked for line and grade. Columns with attached base plates, beams with attached bearing plates and other similar members with attached *bearing devices* that are temporarily supported on leveling nuts and washers, shims or other similar leveling devices, shall be promptly grouted after the *structural steel* frame or portion thereof has been plumbed.

Commentary:

In the majority of structures the vertical load from the column bases is transmitted to the foundations through structural grout. In general, there are three methods by which support is provided for column bases during erection:

(a) Pre-grouted leveling plates or loose base plates;
(b) Shims; and,
(c) Leveling nuts and washers on the *anchor rods* beneath the column base.

Standard practice provides that loose base plates and leveling plates are to be grouted as they are set. *Bearing devices* that are set on shims or leveling nuts are grouted after plumbing, which means that the weight of the erected *structural steel* frame is supported on the shims or washers, nuts and *anchor rods*. The *erector* must take care to ensure that the load that is transmitted in this temporary condition does not exceed the strength of the shims or washers, nuts and *anchor rods*. These considerations are presented in greater detail in AISC Design Guides No. 1 and 10.

7.8. Field Connection Material

7.8.1. The *fabricator* shall provide field *connection* details that are consistent with the requirements in the *contract documents* and that will, in the *fabricator's* opinion, result in economical fabrication and erection.

7.8.2. When the *fabricator* is responsible for erecting the *structural steel*, the *fabricator* shall furnish all materials that are required for both temporary and permanent *connection* of the component parts of the *structural steel* frame.

7.8.3. When the erection of the *structural steel* is not performed by the *fabricator*, the *fabricator* shall furnish the following field *connection* material:

(a) Bolts, nuts and washers of the required grade, type and size and in sufficient quantity for all *structural steel*-to-*structural steel* field *connections* that are to be permanently bolted, including an extra 2 percent of each bolt size (diameter and length);
(b) Shims that are shown as necessary for make-up of permanent *structural steel*-to-*structural steel* field *connections*; and,
(c) Backing bars and run-off tabs that are required for field welding.

7.8.4. The *erector* shall furnish all welding electrodes, fit-up bolts and drift pins used for the erection of the *structural steel*.

Commentary:
See the Commentary for Section 2.2.

7.9. Loose Material

Unless otherwise specified in the *contract documents*, loose *structural steel* items that are not connected to the *structural steel* frame shall be set by the *owner's designated representative for construction* without assistance from the *erector*.

7.10. Temporary Support of Structural Steel Frames

7.10.1. The *owner's designated representative for design* shall identify the following in the *contract documents*:

(a) The lateral-load-resisting system and connecting diaphragm elements that provide for lateral strength and stability in the completed structure; and,
(b) Any special erection conditions or other considerations that are required by the design concept, such as the use of shores, jacks or loads that must be adjusted as erection progresses to set or maintain camber, position within specified tolerances or prestress.

Commentary:
The intent of Section 7.10.1 of the Code is to alert the *owner's designated representative for construction* and the *erector* of the means for lateral load resistance in the completed structure so that appropriate planning can occur for construction of the building. Examples of a description of the lateral load resisting system as required by 7.10.1(a) are shown below.

Example 1 is an all-steel building with a composite metal deck and concrete floor system. All lateral load resistance is provided by welded moment frames in each orthogonal building direction. One suitable description of this lateral load resisting system is:

All lateral load resistance and stability of the building in the completed structure is provided by moment frames with welded beam to column connections framed in each orthogonal direction (see plan sheets for locations). The composite metal deck and concrete floors serve as horizontal diaphragms that distribute the lateral wind and seismic forces horizontally to the vertical moment frames. The vertical moment frames carry the applied lateral loads to the building foundation.

Example 2 is a steel-framed building with a composite metal deck and concrete floor system. All beam-to-column connections are simple connections and all lateral load resistance is provided by reinforced concrete shear walls in the building core and in the stair wells. One suitable description of this lateral load resisting system is:

All lateral load resistance and stability of the building in the completed structure is provided exclusively by cast-in-place reinforced concrete shear walls in the building core and stair wells (see plan sheets for locations). These walls provide all lateral load resistance in each orthogonal building direction. The composite metal deck and concrete floors serve as horizontal diaphragms that distribute the lateral wind and seismic forces horizontally to the concrete shear walls. The concrete shear walls carry the applied lateral loads to the building foundation.

See also Commentary Section 7.10.3.

Section 7.10.1(b) is intended to apply to special requirements inherent in the design concept that could not otherwise be known by the *erector*. Such conditions might include designs that require the use of shores or jacks to impart a load or to obtain a specific elevation or position in a subsequent step of the erection process in a sequencially erected structure or member. These requirements would not be apparent to an *erector*, and must be identified so the *erector* can properly bid, plan and perform the erection.

The *erector* is responsible for installation of all members (including cantilevered members) to the specified plumbness, elevation, and alignment within the erection tolerances specified in this Code. The *erector* must provide all temporary supports and devices to maintain elevation or position within these tolerances. These works are part of the means and methods of the *erector* and the *owner's designated representative for design* need not specify these methods or related equipement.

7.10.2. The *owner's designated representative for construction* shall indicate to the *erector* prior to bidding, the installation schedule for non-*structural steel* elements of the lateral-load-resisting system and connecting diaphragm elements identified by the *owner's designated representative for design* in the *contract documents*.

Commentary:
See Commentary Section 7.10.3.

7.10.3. Based upon the information provided in accordance with Sections 7.10.1 and 7.10.2, the *erector* shall determine, furnish and install all temporary supports, such as temporary guys, beams, falsework, cribbing or other elements required for the erection operation. These temporary supports shall be sufficient to secure the bare *structural steel* framing or any portion thereof against loads that are likely to be encountered during erection, including those due to wind and those that result from erection operations.

The *erector* need not consider loads during erection that result from the performance of work by, or the acts of, others, except as specifically identified by the *owner's designated representatives for design and construction*, nor those that are unpredictable, such as loads due to hurricane, tornado, earthquake, explosion or collision.

Temporary supports that are required during or after the erection of the *structural steel* frame for the support of loads caused by non-*structural steel* elements, including cladding, interior partitions and other such elements that will induce or transmit loads to the *structural steel* frame during or after erection, shall be the responsibility of others.

Commentary:
Many *structural steel* frames have lateral-load-resisting systems that are activated during the erection process. Such lateral-load-resisting systems may consist of welded moment frames, braced frames or, in some instances, columns that cantilever from fixed-base foundations. Such frames are normally braced with temporary guys that, together with the steel deck floor and roof diaphragms, or other diaphragm bracing that may be included as part of the design, provide stability during the erection process. The guy cables are also commonly used to plumb the *structural steel* frame. The *erector* normally furnishes and installs the required temporary supports and bracing to secure the bare *structural steel* frame, or portion thereof, during the erection process. When *erection bracing drawings* are required in the *contract documents*, those drawings show this information.

If the *owner's designated representative for construction* determines that steel decking is not installed by the *erector*, temporary diaphragm bracing may be required if a horizontal diaphragm is not available to distribute loads to the vertical and lateral load resisting system. If the steel deck will not be available as a diaphragm during *structural steel* erection, the *owner's designated representative for construction* must communicate this condition to the *erector* prior to bidding. If such diaphragm bracing is required, it must be furnished and installed by the *erector*.

Sometimes structural systems that are employed by the *owner's designated representative for design* rely upon other elements besides the *structural steel* frame for lateral-load resistance. For instance, concrete or masonry shear walls or precast spandrels may be used to provide resistance to vertical and lateral loads in the completed structure. Because these situations may not be obvious to the contractor or the *erector*, it is required in this Code that the *owner's designated representative for design* must identify such situations in the *contract documents*. Similarly, if a structure is designed so that special erection techniques are required, such as jacking to impose certain loads or position during erection, it is required in this Code that such requirements be specifically identified in the *contract documents*.

In some instances, the *owner's designated representative for design* may elect to show erection bracing in the structural *design drawings*. When this is the case, the *owner's designated representative for design* should then confirm that the bracing requirements were understood by review and approval of the *erection drawings* during the submittal process.

Sometimes during construction of a building, collateral building elements, such as exterior cladding, may be required to be installed on the bare *structural steel* frame prior to completion of the lateral-load-resisting system. These elements may increase the potential for lateral loads on the temporary supports. Such temporary supports may also be required to be left in place after the *structural steel* frame has been erected. Special provisions should be made by the *owner's designated representative for construction* for these conditions.

7.10.4. All temporary supports that are required for the erection operation and furnished and installed by the *erector* shall remain the property of the *erector* and shall not be modified, moved or removed without the consent of the *erector*. Temporary supports provided by the *erector* shall remain in place until the portion of the *structural steel* frame that they brace is complete and the lateral-load-resisting system and connecting diaphragm elements identified by the *owner's designated representative for design* in accordance with Section 7.10.1 are installed. Temporary supports that are required to be left in place after the completion of *structural steel* erection shall be removed when no longer needed by the *owner's designated representative for construction* and returned to the *erector* in good condition.

7.11. Safety Protection

7.11.1. The *erector* shall provide floor coverings, handrails, walkways and other safety protection for the *erector's* personnel as required by law and the applicable safety regulations. Unless otherwise specified in the *contract documents*, the *erector* is permitted to remove such safety protection from areas where the erection operations are completed.

7.11.2. When safety protection provided by the *erector* is left in an area for the use of other trades after the *structural steel* erection activity is completed, the *owner's designated representative for construction* shall:

(a) Accept responsibility for and maintain this protection;
(b) Indemnify the *fabricator* and the *erector* from damages that may be incurred from the use of this protection by other trades;
(c) Ensure that this protection is adequate for use by other affected trades;
(d) Ensure that this protection complies with applicable safety regulations when being used by other trades; and,
(e) Remove this protection when it is no longer required and return it to the *erector* in the same condition as it was received.

7.11.3. Safety protection for other trades that are not under the direct employment of the *erector* shall be the responsibility of the *owner's designated representative for construction*.

7.11.4. When permanent steel decking is used for protective flooring and is installed by the *owner's designated representative for construction*, all such work shall be scheduled and performed in a timely manner so as not to interfere with or delay the work of the *fabricator* or the *erector*. The sequence of installation that is used shall meet all safety regulations.

7.11.5. Unless the interaction and safety of activities of others, such as construction by others or the storage of materials that belong to others, are coordinated with the work of the *erector* by the *owner's designated representative for construction*, such activities shall not be permitted until the erection of the *structural steel* frame or portion thereof is completed by the *erector* and accepted by the *owner's designated representative for construction*.

7.12. Structural Steel Frame Tolerances

The accumulation of the mill tolerances and fabrication tolerances shall not cause the erection tolerances to be exceeded.

Commentary:
In editions of this Code previous to the 2005 edition, it was stated that "…variations are deemed to be within the limits of good practice when they do not exceed the cumulative effect of rolling tolerances, fabricating tolerances and erection tolerances." It is recognized in the current provision in this Section that accumulations of mill tolerances and fabrication tolerances generally occur between the locations at which erection tolerances are applied, and not at the same locations.

7.13. Erection Tolerances

Erection tolerances shall be defined relative to member working points and working lines, which shall be defined as follows:

(a) For members other than horizontal members, the member work point shall be the actual center of the member at each end of the shipping piece.
(b) For horizontal members, the working point shall be the actual centerline of the top flange or top surface at each end.
(c) The member working line shall be the straight line that connects the member working points.

The substitution of other working points is permitted for ease of reference, provided they are based upon the above definitions.

The tolerances on *structural steel* erection shall be in accordance with the requirements in Sections 7.13.1 through 7.13.3.

Commentary:

The erection tolerances defined in this Section have been developed through long-standing usage as practical criteria for the erection of *structural steel*. Erection tolerances were first defined in the 1924 edition of this Code in Section 7(f), "Plumbing Up." With the changes that took place in the types and use of materials in building construction after World War II, and the increasing demand by *architects* and *owners* for more specific tolerances, AISC adopted new standards for erection tolerances in Section 7(h) of the March 15, 1959 edition of this Code. Experience has proven that those tolerances can be economically obtained.

Differential column shortening may be a consideration in design and construction. In some cases, it may occur due to variability in the accumulation of dead load among different columns (see Figure C–7.1). In other cases, it may be characteristic of the structural system that is employed in the design. Consideration of the effects of differential column shortening may be very important, such as when the slab thickness is reduced, when electrical and other similar fittings mounted on the *structural steel* are intended to be flush with the finished floor and when there is little clearance between bottoms of beams and the tops of door frames or ductwork.

The effects of the deflection of transfer girders and trusses on the position of columns and hangers supported from them may be a consideration in design and construction. As in the case of differential column shortening, the deflecton of these supporting members during and after construction will affect the position and alignment of the framing tributary to these transfer members.

(Commentary continues after figures)

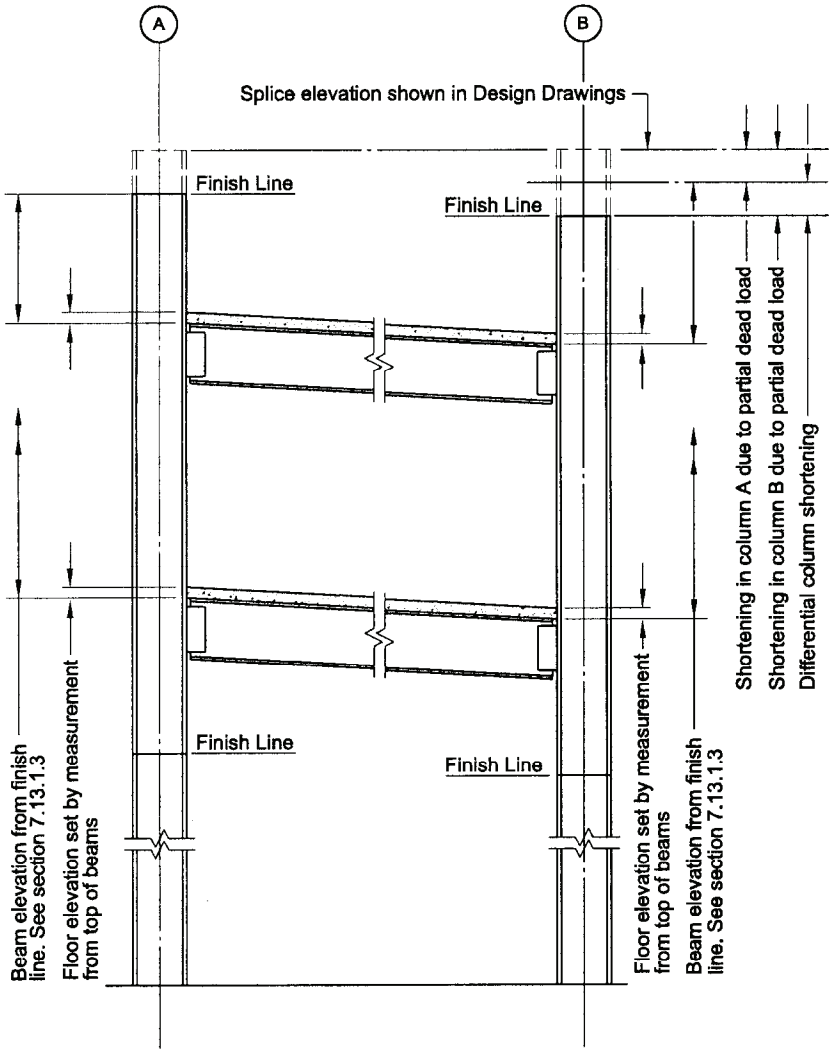

Figure C-7.1. Effects of differential column shortening.

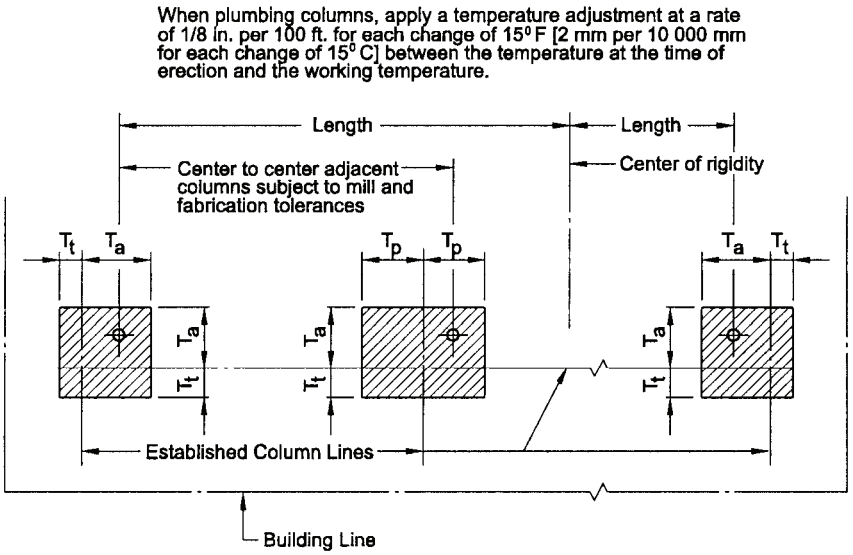

Figure C-7.2. Tolerances in plan location of column.

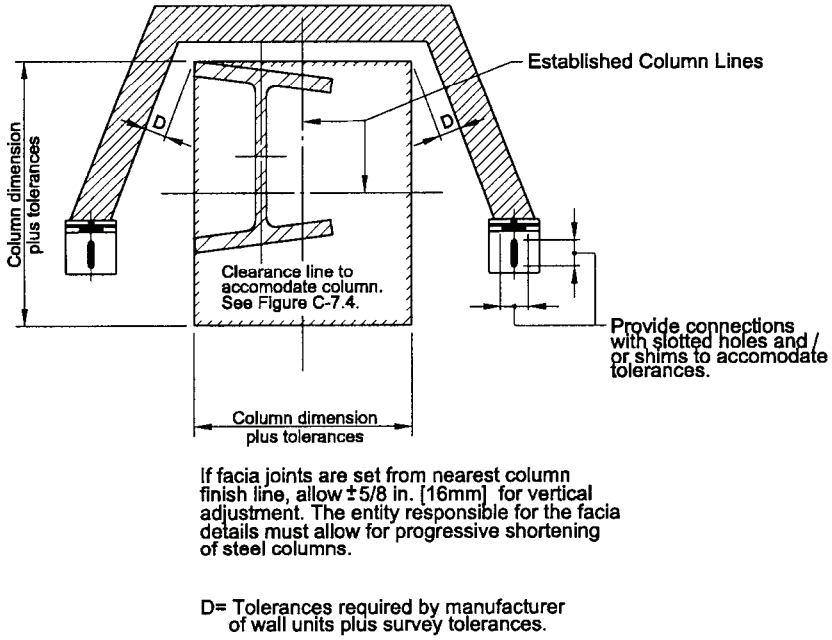

Figure C-7.3.Clearance required to accommodate fascia.

Expansion and contraction in a *structural steel* frame may be a consideration in design and construction. Steel will expand or contract approximately ⅛ in. per 100 ft for each change of 15°F [2 mm per 10 000 mm for each change of 15°C] in temperature. This change in length can be assumed to act about the center of rigidity. When anchored to their foundations, end columns will be plumb only when the steel is at normal temperature (see Figure C–7.2). It is therefore necessary to correct field measurements of offsets to the structure from established baselines for the expansion or contraction of the exposed *structural steel* frame. For example, a 200-ft-long [60 000-m-long] building that is plumbed up at 100°F [38°C] should have working points at the tops of the end columns positioned ½ in. [14 mm] further apart than the working points at the corresponding bases in order for the columns to be plumb at 70°F [21°C]. Differential temperature effects on column length should also be taken into account in plumbing surveys when tall *structural steel* frames are subjected to sun exposure on one side.

The alignment of lintels, spandrels, wall supports and similar members that are used to connect other building construction units to the *structural steel* frame should have an adjustment of sufficient magnitude to allow for the accumulation of mill tolerances and fabrication tolerances, as well as the erection tolerances. See Figure C–7.3.

7.13.1. The tolerances on position and alignment of member working points and working lines shall be as described in Sections 7.13.1.1 through 7.13.1.3.

7.13.1.1. For an individual column shipping piece, the angular variation of the working line from a plumb line shall be equal to or less than 1/500 of the distance between working points, subject to the following additional limitations:

(a) For an individual column shipping piece that is adjacent to an elevator shaft, the displacement of member working points shall be equal to or less than 1 in. [25 mm] from the *established column line* in the first 20 stories. Above this level, an increase in the displacement of 1/32 in. [1 mm] is permitted for each additional story up to a maximum displacement of 2 in. [50 mm] from the *established column line*.

(b) For an exterior individual column shipping piece, the displacement of member working points from the *established column line* in the first 20 stories shall be equal to or less than 1 in. [25 mm] toward and 2 in. [50 mm] away from the building line. Above this level, an increase in the displacement of 1/16 in. [2 mm] is permitted for each additional story up to a maximum displacement of 2 in. [50 mm] toward and 3 in. [75 mm] away from the building line.

Commentary:
The limitations that are described in this Section and illustrated in Figures C–7.4 and C–7.5 make it possible to maintain built-in-place or

prefabricated facades in a true vertical plane up to the 20th story, if *connections* that provide for 3 in. [75 mm] of adjustment are used. Above the 20th story, the facade may be maintained within 1/16 in. [2 mm] per story with a maximum total deviation of 1 in. [25 mm] from a true vertical plane, if *connections* that provide for 3 in. [75 mm] of adjustment are used. *Connections* that permit adjustments of plus 2 in. [50 mm] to minus 3 in. [75 mm] (5 in. [125 mm] total) will be necessary in cases where it is desired to construct the facade to a true vertical plane above the 20th story.

(c) For an exterior individual column shipping piece, the member working points at any splice level for multi-*tier* buildings and at the tops of columns for single-*tier* buildings shall fall within a horizontal envelope, parallel to the building line, that is equal to or less than 1½ in. [38 mm] wide for buildings up to 300 ft [90 000 mm] in length. An increase in the width of this horizontal envelope of ½ in. [13 mm] is permitted for each additional 100 ft [30 000 m] in length up to a maximum width of 3 in. [75 mm].

Commentary:
This Section limits the position of exterior column working points at any given splice elevation to a narrow horizontal envelope parallel to the building line (see Figure C–7.6). This envelope is limited to a width of 1½ in. [38 mm], normal to the building line, in up to 300 ft [90 000 mm] of building length. The horizontal location of this envelope is not necessarily directly above or below the corresponding envelope at the adjacent splice elevations, but should be within the limitation of the 1 in 500 plumbness tolerance specified for the controlling columns (see Figure C–7.5).

(d) For an exterior column shipping piece, the displacement of member working points from the *established column line*, parallel to the building line, shall be equal to or less than 2 in. [50 mm] in the first 20 stories. Above this level, an increase in the displacement of 1/16 in. [2 mm] is permitted for each additional story up to a maximum displacement of 3 in. [75 mm] parallel to the building line.

7.13.1.2. For members other than column shipping pieces, the following limitations shall apply:

(a) For a member that consists of an individual, straight shipping piece without field splices, other than a cantilevered member, the variation in alignment shall be acceptable if it is caused solely by variations in column alignment and/or primary supporting member alignment that are within the permissible variations for the fabrication and erection of such members.

(b) For a member that consists of an individual, straight shipping piece that connects to a column, the variation in the distance from the member working point to the upper finished splice line of the column shall be equal to or less than plus 3/16 in. [5 mm] and minus 5/16 in. [8 mm].

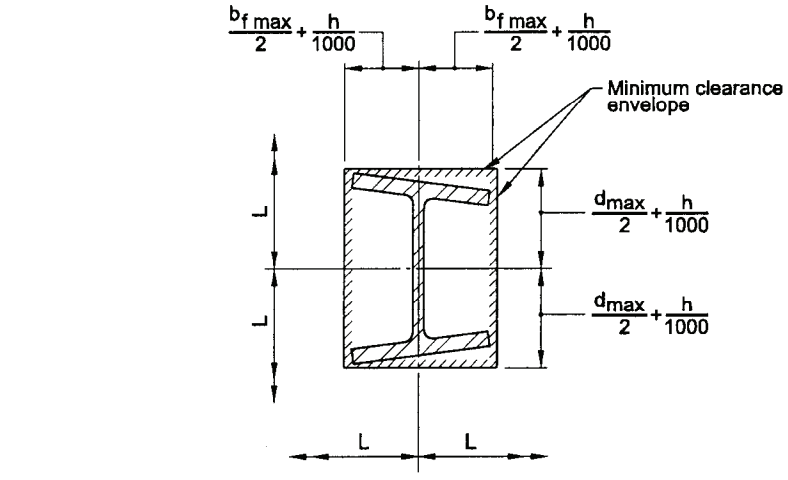

For enclosures or attachments that may follow column alignment.

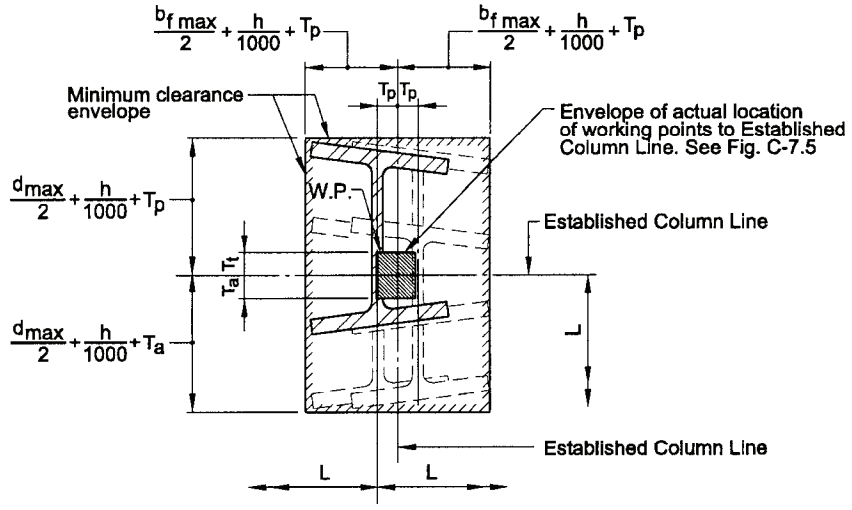

For enclosures or attachments that must be held to precise plan location.

L = Actual center to center of columns = plan dimensions ± column cross section tolerance of columns ± beam length tolerance.

T_a = Plumbness tolerance away from building line (varies, see Fig. C-7.5)

T_t = Plumbness tolerance toward building line (varies, see Fig. C-7.5)

T_p = Plumbness tolerance parallel to building line ($=T_a$)

Figure C-7.4. Clearance required to accommodate accumulated column tolerance.

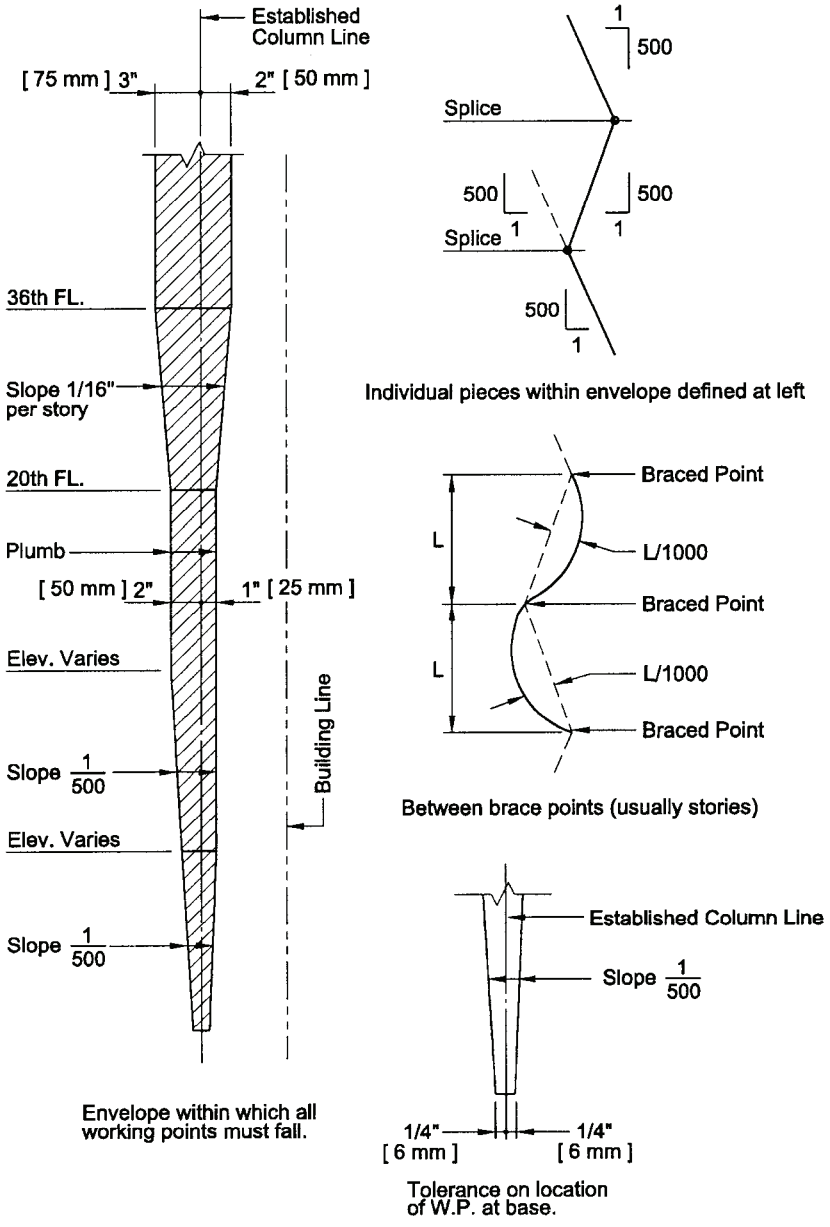

Note: The plumb line through the base working point for an individual column is not necessarily the precise plan location because Sect. 7.13.1.1 deals only with plumbness tolerances and does not include inaccuracies in location of the Established Column Line, foundations and anchor rods beyond the Erector's control

Figure C-7.5.Exterior column plumbness tolerances normal to building line.

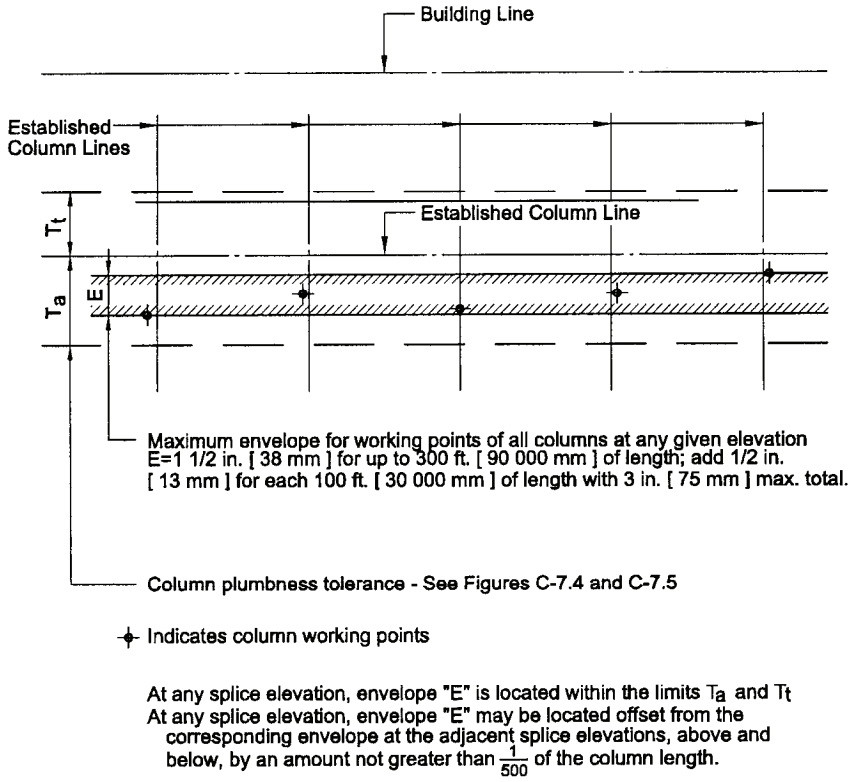

Figure C-7.6. Tolerances in plan at any splice elevation of exterior columns.

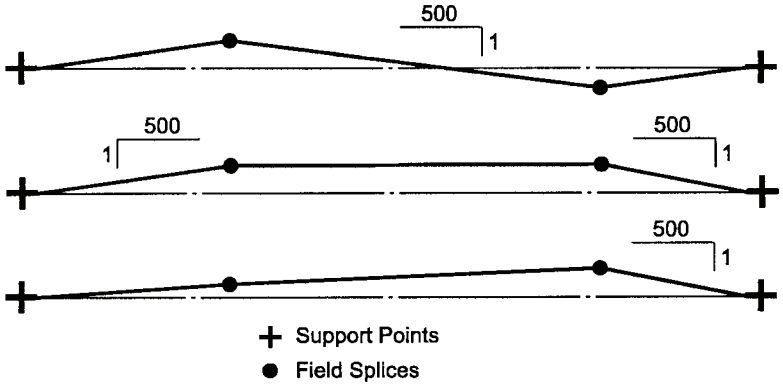

Figure C-7.7. Alignment tolerances for members with field splices.

(c) For a member that consists of an individual shipping piece that does not connect to a column, the variation in elevation shall be acceptable if it is caused solely by the variations in the elevations of the supporting members within the permissible variations for the fabrication and erection of those members.

(d) For a member that consists of an individual, straight shipping piece and that is a segment of a field assembled unit containing field splices between points of support, the plumbness, elevation and alignment shall be acceptable if the angular variation, vertically and horizontally, of the working line from a straight line between points of support is equal to or less than 1/500 of the distance between working points.

Commentary:
The angular misalignment of the working line of all fabricated shipping pieces relative to the line between support points of the member as a whole in erected position must not exceed 1 in 500. Note that the tolerance is not stated in terms of a linear displacement at any point and is not to be taken as the overall length between supports divided by 500. Typical examples are shown in Figure C–7.7. Numerous conditions within tolerance for these and other cases are possible. The condition described in (d) applies to both plan and elevation tolerances.

(e) For a cantilevered member that consists of an individual, straight shipping piece, the plumbness, elevation and alignment shall be acceptable if the angular variation of the working line from a straight line that is extended in the plan direction from the working point at its supported end is equal to or less than 1/500 of the distance from the working point at the free end.

(f) For a member of irregular shape, the plumbness, elevation and alignment shall be acceptable if the fabricated member is within its tolerances and the members that support it are within the tolerances specified in this Code.

(g) For a member that is fully assembled in the field in an unstressed condition, the same tolerances shall apply as if fully assembled in the shop.

(h) For a member that is field-assembled, element-by-element in place, temporary support shall be used or an alternative erection plan shall be submitted to the *owner's designated representatives for design and construction*. The tolerance in Section 7.13.1.2(d) shall be met in the supported condition with working points taken at the point(s) of temporary support.

Commentary:
Trusses fabricated and erected as a unit or as an assembly of truss segments normally have excellent controls on vertical position regardless of fabrication and erection techniques. However, a truss fabricated and erected by assembling individual components in place in the field is potentially

more sensitive to deflections of the individual truss components and the partially completed work during erection, particularly the chord members. In such a case, the erection process should follow an erection plan that addresses this issue.

7.13.1.3. For members that are identified as *adjustable items* by the *owner's designated representative for design* in the *contract documents*, the *fabricator* shall provide adjustable *connections* for these members to the supporting *structural steel* frame. Otherwise, the *fabricator* is permitted to provide non-adjustable *connections*. When *adjustable items* are specified, the *owner's designated representative for design* shall indicate the total adjustability that is required for the proper alignment of these supports for other trades. The variation in the position and alignment of *adjustable items* shall be as follows:

(a) The variation in the vertical distance from the upper finished splice line of the nearest column to the support location specified in the structural *design drawings* shall be equal to or less than plus or minus ⅜ in. [10 mm].
(b) The variation in the horizontal distance from the established finish line at the particular floor shall be equal to or less than plus or minus ⅜ in. [10 mm].
(c) The variation in vertical and horizontal alignment at the abutting ends of *adjustable items* shall be equal to or less than plus or minus 3⁄16 in. [5 mm].

Commentary:
When the alignment of lintels, wall supports, curb angles, mullions and similar supporting members for the use of other trades is required to be closer than that permitted by the foregoing tolerances for *structural steel*, the *owner's designated representative for design* must identify such items in the *contract documents* as *adjustable items*.

7.13.2. In the design of steel structures, the *owner's designated representative for design* shall provide for the necessary clearances and adjustments for material furnished by other trades to accommodate the mill tolerances, fabrication tolerances and erection tolerances in this Code for the *structural steel* frame.

Commentary:
In spite of all efforts to minimize inaccuracies, deviations will still exist; therefore, in addition, the designs of prefabricated wall panels, partition panels, fenestrations, floor-to-ceiling door frames and similar elements must provide for clearance and details for adjustment as described in Section 7.13.2. Designs must provide for adjustment in the vertical dimension of prefabricated facade panels that are supported by the *structural steel* frame because the accumulation of shortening of loaded steel columns will result in the unstressed facade supported at each floor level being higher than the *structural steel* framing to

which it must be attached. Observations in the field have shown that where a heavy facade is erected to a greater height on one side of a multistory building than on the other, the *structural steel* framing will be pulled out of alignment. Facades should be erected at a relatively uniform rate around the perimeter of the structure.

7.13.3. Prior to placing or applying any other materials, the *owner's designated representative for construction* shall determine that the location of the *structural steel* is acceptable for plumbness, elevation and alignment. The *erector* shall be given either timely notice of acceptance by the *owner's designated representative for construction*, or a listing of specific items that are to be corrected in order to obtain acceptance. Such notice shall be rendered promptly upon completion of any part of the work and prior to the start of work by other trades that may be supported, attached or applied to the *structural steel* frame.

7.14. Correction of Errors

The correction of minor misfits by moderate amounts of reaming, grinding, welding or cutting, and the drawing of elements into line with drift pins, shall be considered to be normal erection operations. Errors that cannot be corrected using the foregoing means, or that require major changes in member or *connection* configuration, shall be promptly reported to the *owner's designated representatives for design and construction* and the *fabricator* by the *erector*, to enable the responsible entity to either correct the error or approve the most efficient and economical method of correction to be used by others.

Commentary:
As used in this Section, the term "moderate" refers to the amount of reaming, grinding, welding or cutting that must be done on the project as a whole, not the amount that is required at an individual location. It is not intended to address limitations on the amount of material that is removed by reaming at an individual bolt hole, for example, which is limited by the bolt-hole size and tolerance requirements in the AISC and RCSC Specifications.

7.15. Cuts, Alterations and Holes for Other Trades

Neither the *fabricator* nor the *erector* shall cut, drill or otherwise alter their work, nor the work of other trades, to accommodate other trades, unless such work is clearly specified in the *contract documents*. When such work is so specified, the *owner's designated representatives for design and construction* shall furnish complete information as to materials, size, location and number of alterations in a timely manner so as not to delay the preparation of *shop* and *erection drawings*.

7.16. Handling and Storage

The *erector* shall take reasonable care in the proper handling and storage of the *structural steel* during erection operations to avoid the accumulation of excess dirt and foreign matter. The *erector* shall not be responsible for the removal from the *structural steel* of dust, dirt or other foreign matter that may

accumulate during erection as the result of job-site conditions or exposure to the elements. The *erector* shall handle and store all bolts, nuts, washers and related fastening products in accordance with the requirements of the RCSC Specification.

Commentary:
During storage, loading, transport, unloading and erection, blemish marks caused by slings, chains, blocking, tie-downs, etc., occur in varying degrees. Abrasions caused by handling or cartage after painting are to be expected. It must be recognized that any shop-applied coating, no matter how carefully protected, will require touching-up in the field. Touching-up of these blemished areas is the responsibility of the contractor performing the field touch-up or field painting.

The *erector* is responsible for the proper storage and handling of fabricated *structural steel* at the job site during erection. Shop-painted *structural steel* that is stored in the field pending erection should be kept free of the ground and positioned so as to minimize the potential for water retention. The *owner* or *owner's designated representative for construction* is responsible for providing suitable job-site conditions and proper access so that the *fabricator* and the *erector* may perform their work.

Job-site conditions are frequently muddy, sandy, dusty or a combination thereof during the erection period. Under such conditions it may be impossible to store and handle the *structural steel* in such a way as to completely avoid any accumulation of mud, dirt or sand on the surface of the *structural steel*, even though the *fabricator* and the *erector* manages to proceed with their work.

Repairs of damage to painted surfaces and/or removal of foreign materials due to adverse job-site conditions are outside the scope of responsibility of the *fabricator* and the *erector* when reasonable attempts at proper handling and storage have been made.

7.17. Field Painting

Neither the *fabricator* nor the *erector* is responsible to paint field bolt heads and nuts or field welds, nor to touch up abrasions of the shop coat, nor to perform any other field painting.

7.18. Final Cleaning Up

Upon the completion of erection and before final acceptance, the *erector* shall remove all of the *erector's* falsework, rubbish and temporary buildings.

SECTION 8. QUALITY CONTROL

8.1. General

8.1.1. The *fabricator* shall maintain a quality control program to ensure that the work is performed in accordance with the requirements in this Code, the AISC Specification and the *contract documents*. The *fabricator* shall have the option to use the AISC Quality Certification Program to establish and administer the quality control program.

Commentary:
The AISC Quality Certification Program confirms to the construction industry that a certified *structural steel* fabrication shop has the capability by reason of commitment, personnel, organization, experience, procedures, knowledge and equipment to produce fabricated *structural steel* of the required quality for a given category of work. The AISC Quality Certification Program is not intended to involve inspection and/or judgment of product quality on individual projects. Neither is it intended to guarantee the quality of specific fabricated *structural steel* products.

8.1.2. The *erector* shall maintain a quality control program to ensure that the work is performed in accordance with the requirements in this Code, the AISC Specification and the *contract documents*. The *erector* shall be capable of performing the erection of the *structural steel*, and shall provide the equipment, personnel and management for the scope, magnitude and required quality of each project. The *erector* shall have the option to use the AISC Erector Certification Program to establish and administer the quality control program.

Commentary:
The AISC Erector Certification Program confirms to the construction industry that a certified *structural steel erector* has the capability by reason of commitment, personnel, organization, experience, procedures, knowledge and equipment to erect fabricated *structural steel* to the required quality for a given category of work. The AISC Erector Certification Program is not intended to involve inspection and/or judgment of product quality on individual projects. Neither is it intended to guarantee the quality of specific erected *structural steel* products.

8.1.3. When the *owner* requires more extensive quality control procedures, or independent inspection by qualified personnel, or requires that the *fabricator* must be certified under the AISC Quality Certification Program and/or requires that the *erector* must be certified under the AISC Erector Certification Program, this shall be clearly stated in the *contract documents*, including a definition of the scope of such inspection.

8.2. Inspection of Mill Material

Material test reports shall constitute sufficient evidence that the mill product satisfies material order requirements. The *fabricator* shall make a visual inspection of material that is received from the mill, but need not perform any material tests unless the *owner's designated representative for design* specifies in the *contract documents* that additional testing is to be performed at the *owner's* expense.

8.3. Non-Destructive Testing

When non-destructive testing is required, the process, extent, technique and standards of acceptance shall be clearly specified in the *contract documents*.

8.4. Surface Preparation and Shop Painting Inspection

Inspection of surface preparation and shop painting shall be planned for the acceptance of each operation as the *fabricator* completes it. Inspection of the paint system, including material and thickness, shall be made promptly upon completion of the paint application. When wet-film thickness is to be inspected, it shall be measured during the application.

8.5. Independent Inspection

When inspection by personnel other than those of the *fabricator* and/or *erector* is specified in the *contract documents*, the requirements in Sections 8.5.1 through 8.5.6 shall be met.

8.5.1. The *fabricator* and the *erector* shall provide the *inspector* with access to all places where the work is being performed. A minimum of 24 hours notification shall be given prior to the commencement of work.

8.5.2. Inspection of shop work by the *inspector* shall be performed in the *fabricator's* shop to the fullest extent possible. Such inspections shall be timely, in-sequence and performed in such a manner as will not disrupt fabrication operations and will permit the repair of non-conforming work prior to any required painting while the material is still in-process in the fabrication shop.

8.5.3. Inspection of field work shall be promptly completed without delaying the progress or correction of the work.

8.5.4. Rejection of material or workmanship that is not in conformance with the *contract documents* shall be permitted at any time during the progress of the work. However, this provision shall not relieve the *owner* or the *inspector* of the obligation for timely, in-sequence inspections.

8.5.5. The *fabricator*, *erector***,** and *owner's designated representatives for design and construction* shall be informed of deficiencies that are noted by the *inspector* promptly after the inspection. Copies of all reports prepared by the *inspector* shall be promptly given to the *fabricator*, *erector*, and *owner's designated representatives for design and construction*. The necessary corrective work shall be performed in a timely manner.

8.5.6. The *inspector* shall not suggest, direct, or approve the *fabricator* or *erector* to deviate from the *contract documents* or the approved *shop* and *erection drawings*, or approve such deviation, without the written approval of the *owner's designated representatives for design and construction*.

SECTION 9. CONTRACTS

9.1. Types of Contracts

9.1.1. For contracts that stipulate a lump sum price, the work that is required to be performed by the *fabricator* and the *erector* shall be completely defined in the *contract documents*.

9.1.2. For contracts that stipulate a price per pound, the scope of work that is required to be performed by the *fabricator* and the *erector*, the type of materials, the character of fabrication and the conditions of erection shall be based upon the *contract documents*, which shall be representative of the work to be performed.

9.1.3. For contracts that stipulate a price per item, the work that is required to be performed by the *fabricator* and the *erector* shall be based upon the quantity and the character of the items that are described in the *contract documents*.

9.1.4. For contracts that stipulate unit prices for various categories of *structural steel*, the scope of work that is required to be performed by the *fabricator* and the *erector* shall be based upon the quantity, character and complexity of the items in each category as described in the *contract documents*, and shall also be representative of the work to be performed in each category.

9.2. Calculation of Weights

Unless otherwise specified in the contract, for contracts stipulating a price per pound for fabricated *structural steel* that is delivered and/or erected, the quantities of materials for payment shall be determined by the calculation of the gross weight of materials as shown in the *shop drawings*.

Commentary:
The standard procedure for calculation of weights that is described in this Code meets the need for a universally acceptable system for defining "pay weights" in contracts based upon the weight of delivered and/or erected materials. These procedures permits the *owner* to easily and accurately evaluate price-per-pound proposals from potential suppliers and enables all parties to a contract to have a clear and common understanding of the basis for payment.

The procedure in this Code affords a simple, readily understood method of calculation that will produce pay weights that are consistent throughout the industry and that may be easily verified by the *owner*. While this procedure does not produce actual weights, it can be used by purchasers and suppliers to define a widely accepted basis for bidding and contracting for *structural steel*. However, any other system can be used as the basis for a contractual agreement. When other systems are used, both the supplier and the purchaser should clearly understand how the alternative procedure is handled.

9.2.1. The unit weight of steel shall be taken as 490 lb/ft^3 [7 850 kg/m^3]. The unit weight of other materials shall be in accordance with the manufacturer's published data for the specific product.

9.2.2. The weights of *standard structural shapes*, plates and bars shall be calculated on the basis of *shop drawings* that show the actual quantities and dimensions of material to be fabricated, as follows:

(a) The weights of all *standard structural shapes* shall be calculated using the nominal weight per ft [mass per m] and the detailed overall length.
(b) The weights of plates and bars shall be calculated using the detailed overall rectangular dimensions.
(c) When parts can be economically cut in multiples from material of larger dimensions, the weight shall be calculated on the basis of the theoretical rectangular dimensions of the material from which the parts are cut.
(d) When parts are cut from *standard structural shapes*, leaving a non-standard section that is not useable on the same contract, the weight shall be calculated using the nominal weight per ft [mass per m] and the overall length of the *standard structural shapes* from which the parts are cut.
(e) Deductions shall not be made for material that is removed for cuts, copes, clips, blocks, drilling, punching, boring, slot milling, planing or weld joint preparation.

9.2.3. The items for which weights are shown in tables in the AISC *Steel Construction Manual* shall be calculated on the basis of the tabulated weights shown therein.

9.2.4. The weights of items that are not shown in tables in the AISC *Steel Construction Manual* shall be taken from the manufacturer's catalog and the manufacturer's shipping weight shall be used.

Commentary:
Many items that are weighed for payment purposes are not tabulated with weights in the AISC *Steel Construction Manual*. These include, but are not limited to, *anchor rods*, clevises, turnbuckles, sleeve nuts, recessed-pin nuts, cotter pins and similar devices.

9.2.5. The weights of shop or field weld metal and protective coatings shall not be included in the calculated weight for the purposes of payment.

9.3. Revisions to the Contract Documents

Revisions to the *contract documents* shall be confirmed by change order or extra work order. Unless otherwise noted, the issuance of a *revision* to the *contract documents* shall constitute authorization by the *owner* that the *revision* is

released for construction. The contract price and schedule shall be adjusted in accordance with Sections 9.4 and 9.5.

9.4. Contract Price Adjustment

9.4.1. When the scope of work and responsibilities of the *fabricator* and the *erector* are changed from those previously established in the *contract documents*, an appropriate modification of the contract price shall be made. In computing the contract price adjustment, the *fabricator* and the *erector* shall consider the quantity of work that is added or deleted, the modifications in the character of the work and the timeliness of the change with respect to the status of material ordering, detailing, fabrication and erection operations.

Commentary:
The fabrication and erection of *structural steel* is a dynamic process. Typically, material is being acquired at the same time that the *shop* and *erection drawings* are being prepared. Additionally, the fabrication shop will normally fabricate pieces in the order that the *structural steel* is being shipped and erected.

Items that are revised or placed on hold generally upset these relationships and can be very disruptive to the detailing, fabricating and erecting processes. The provisions in Sections 3.5, 4.4.2 and 9.3 are intended to minimize these disruptions so as to allow work to continue. Accordingly, it is required in this Code that the reviewer of requests for contract price adjustments recognize this and allow compensation to the *fabricator* and the *erector* for these inefficiencies and for the materials that are purchased and the detailing, fabrication and erection that has been performed, when affected by the change.

9.4.2. Requests for contract price adjustments shall be presented by the *fabricator* and/or the *erector* in a timely manner and shall be accompanied by a description of the change that is sufficient to permit evaluation and timely approval by the *owner*.

9.4.3. Price-per-pound and price-per-item contracts shall provide for additions or deletions to the quantity of work that are made prior to the time the work is *released for construction*. When changes are made to the character of the work at any time, or when additions and/or deletions are made to the quantity of the work after it is released for detailing, fabrication or erection, the contract price shall be equitably adjusted.

9.5. Scheduling

9.5.1. The contract schedule shall state when the *design drawings* will be *released for construction*, if the *design drawings* are not available at the time of bidding, and when the job site, foundations, piers and abutments will be ready, free from

obstructions and accessible to the *erector*, so that erection can start at the designated time and continue without interference or delay caused by the *owner's designated representative for construction* or other trades.

9.5.2. The *fabricator* and the *erector* shall advise the *owner's designated representatives for design and construction*, in a timely manner, of the effect any *revision* has on the contract schedule.

9.5.3. If the fabrication or erection is significantly delayed due to *revisions* to the requirements of the contract, or for other reasons that are the responsibility of others, the *fabricator* and/or *erector* shall be compensated for the additional costs incurred.

9.6. Terms of Payment

The *fabricator* shall be paid for *mill materials* and fabricated product that is stored off the job site. Other terms of payment for the contract shall be outlined in the *contract documents*.

Commentary:
These terms include such items as progress payments for material, fabrication, erection, retainage, performance and payment bonds and final payment. If a performance or payment bond, paid for by the *owner*, is required by contract, no retainage shall be required.

SECTION 10. ARCHITECTURALLY EXPOSED STRUCTURAL STEEL

10.1. General Requirements

When members are specifically designated as *architecturally exposed structural steel* or AESS in the *contract documents*, the requirements in Sections 1 through 9 shall apply as modified in Section 10. AESS members or components shall be fabricated and erected with the care and dimensional tolerances that are stipulated in Sections 10.2 through 10.4. The following additional information shall be provided in the *contract documents* when AESS is specified:

(a) Specific identification of members or components that are AESS;
(b) Fabrication and/or erection tolerances that are to be more restrictive than provided for in this Section, if any; and,
(c) Requirements, if any, of a mock-up panel or components for inspection and acceptance standards prior to the start of fabrication.

Commentary:
This Section of this Code defines additional requirements that apply only to members that are specifically designated by the *contract documents* as *architecturally exposed structural steel* (AESS). The common use of exposed *structural steel* as a medium of architectural expression has given rise to a demand for closer dimensional tolerances and smoother finished surfaces than required for ordinary *structural steel* framing.

This Section of this Code establishes standards for these requirements that take into account both the desired finished appearance and the abilities of the fabrication shop to produce the desired product. It should be pointed out that the term *architecturally exposed structural steel*, as covered in this Section, must be specified in the *contract documents* if the *fabricator* is required to meet the fabricating standards in this Section, and applies only to that portion of the *structural steel* so identified.

AESS requirements usually involve significant cost in excess of that for *structural steel* that is fabricated in the absence of an AESS requirement. Therefore, the designation AESS should be applied rationally, with visual acceptance criteria that are appropriate for the distance at which the exposed element will be viewed in the completed structure. In order to avoid misunderstandings and to hold costs to a minimum, only those *structural steel* surfaces and *connections* that will remain exposed and subject to normal view by pedestrians or occupants of the completed structure should be designated as AESS.

10.2. Fabrication

10.2.1. The permissible tolerances for out-of-square or out-of-parallel, depth, width and symmetry of rolled shapes shall be as specified in ASTM A6/A6M. Unless otherwise specified in the *contract documents*, the exact matching of abutting

cross-sectional configurations shall not be necessary. The as-fabricated straightness tolerances of members shall be one-half of the standard camber and sweep tolerances in ASTM A6/A6M.

10.2.2. The tolerances on overall profile dimensions of members that are built-up from a series of *standard structural shapes*, plates and/or bars by welding shall be taken as the accumulation of the variations that are permitted for the component parts in ASTM A6/A6M. The as-fabricated straightness tolerances for the member as a whole shall be one-half the standard camber and sweep tolerances for rolled shapes in ASTM A6/A6M.

10.2.3. Unless specific visual acceptance criteria for *weld show-through* are specified in the *contract documents*, the members or components shall be acceptable as produced.

Commentary:
Weld show-through generally is a function of weld size and material thickness.

10.2.4. All copes, miters and cuts in surfaces that are exposed to view shall be made with uniform gaps of ⅛ in. [3 mm] if shown as open joints, or in reasonable contact if shown without gap.

10.2.5. All welds that are exposed to view shall be visually acceptable if they meet the requirements in AWS D1.1, except all groove welds in butt joints and outside corner joints and plug welds that are exposed to view shall not project more than 1⁄16 in. [2 mm] above the exposed surface. Finishing or grinding of welds shall not be necessary, unless such treatment is required to provide for clearances or fit of other components.

10.2.6. Erection marks or other painted marks shall not be made on those surfaces of weathering steel AESS members that are to be exposed in the completed structure. Unless otherwise specified in the *contract documents*, the *fabricator* shall clean weathering steel AESS members to meet the requirements of SSPC-SP6.

10.2.7. Stamped or raised manufacturer's identification marks shall not be filled, ground or otherwise removed.

10.2.8. Seams of hollow structural sections shall be acceptable as produced. Seams shall be oriented away from view or as directed in the *contract documents*.

10.3. Delivery of Materials

The *fabricator* shall use special care to avoid bending, twisting or otherwise distorting the *structural steel*.

10.4. Erection

10.4.1. The *erector* shall use special care in unloading, handling and erecting the *structural steel* to avoid marking or distorting the *structural steel*. Care shall also be taken to minimize damage to any shop paint. If temporary braces or erection clips are used, care shall be taken to avoid the creation of unsightly surfaces upon removal. Tack welds shall be ground smooth and holes shall be filled with weld metal or body solder and smoothed by grinding or filing. The *erector* shall plan and execute all operations in such a manner that the close fit and neat appearance of the structure will not be impaired.

10.4.2. Unless otherwise specified in the *contract documents*, AESS members and components shall be plumbed, leveled and aligned to a tolerance that is one-half that permitted for non-AESS members. To accommodate these erection tolerances for AESS, the *owner's designated representative for design* shall specify *connections* between AESS members and non-AESS members, masonry, concrete and other supports as *adjustable items*, in order to provide the *erector* with means for adjustment.

10.4.3. When AESS is backed with concrete, the *owner's designated representative for construction* shall provide sufficient shores, ties and strongbacks to prevent sagging, bulging or similar deformation of the AESS members due to the weight and pressure of the wet concrete.

APPENDIX A. DIGITAL BUILDING PRODUCT MODELS

The provisions in this Appendix shall apply when the *contract documents* indicate that a three-dimensional digital building product model replaces contract drawings and is to be used as the primary means of designing, representing, and exchanging *structural steel* data for the project. When this is the case, all references to the *design drawings* in this Code shall instead apply to the design model, and all references to the *shop* and *erection drawings* in the Code shall instead apply to the manufacturing model. The CIS/2 *Logical Product Model* shall be used as the building product model for *structural steel*.

If the primary means of project communication reverts from a model-based system to a paper-based system, the requirements in this Code other than in this Appendix shall apply.

Commentary:
Current technology permits the transfer of three-dimensional digital building product model data among the design and construction teams for a project. Over the last several years, designers and *fabricators* have used CIS/2 as a standard format in the exchange of building product models representing the steel structure. This Appendix facilitates the use of this technology in the design and construction of steel structures, and eliminates any interpretation of this Code that might be construed to prohibit or inhibit the use of this technology. While the technology is new and there is no long-established standard of practice, it is the intent in this Appendix to provide guidance for its use.

APPENDIX A. GLOSSARY

Add the following definitions to the Glossary:

Building Product Model. A digital information structure of the objects making up a building, capturing the form, function, behavior and relations of the parts and assemblies within one or more building systems. A building product model can be implemented in multiple ways, including as an ASCII file or as a database. The data in the model is created, manipulated, evaluated, reviewed and presented using computer-based design, engineering, and manufacturing applications. Traditional two-dimensional drawings may be one of many reports generated by the building product model (see Eastman, Charles M.: Building Product Models: Computer Environments Supporting Design and Construction; 1999 by CRC Press).

CIS/2 (CIMSteel Integration Standards/Version 2). The specification providing the building product model for *structural steel* and format for electronic data interchange (EDI) among software applications dealing with steel design, analysis, and manufacturing.

Data Management Conformance (DMC). The capability of the CIMSteel model to include optional data entities for managing and tracking additions, deletions and

modifications to a model, including who made the change and when the change was made for all data changes.

Logical Product Model (LPM). The CIS/2 building product model, which supports the engineering of low-, medium- and high-rise construction, in domestic, commercial and industrial contexts. All elements of the structure are covered, including main and secondary framing and *connections*. The components used can be of any variety of structural shape or element.

The LPM addresses the exchange of data between *structural steel* applications. It is meant to support a heterogeneous set of applications over a fairly broad portion of the steel lifecycle. It is organized around three different sub-models: the analysis model (data represented in structural analysis), the design model (data represented in frame design layout) and the manufacturing model (data represented in detailing for fabrication).

A1.2. Referenced Specifications, Codes and Standards

Add the following reference to Section 1.2:

CIMSteel Integration Standards Release 2: Second Edition P265: CIS/2.1: Volumes 1 through 4.

A3. DESIGN DRAWINGS AND SPECIFICATIONS

In addition to the requirements in Section 3, the following requirements shall apply to the design model:

A3.1. Design Model

The design model shall:

(a) Consist of *data management conformance* classes.
(b) Contain analysis model data so as to include load calculations as specified in the *contract documents*.
(c) Include entities that fully define each steel element and the extent of detailing of each element, as would be recorded on equivalent set of *structural steel design drawings*.
(d) Include all steel elements identified in the *contract documents*, as well as any other entities required for strength and stability of the completely erected structure.
(e) Govern over all other forms of information, including drawings, sketches, etc.

A3.2. LPM Administration

The *owner* shall designate an administrator for the LPM, who shall:

(a) Control the LPM by providing appropriate access privileges (read, write, etc) to all relevant parties.
(b) Maintain the security of the LPM.
(c) Guard against data loss of the LPM.
(d) Be responsible for updates and *revisions* to the LPM as they occur.
(e) Inform all appropriate parties as to changes to the LPM.

Commentary:
When a project is designed and constructed using EDI, it is imperative that an individual entity on the team be responsible for maintaining the LPM. This is to assure protection of data through proper backup, storage and security and to provide coordination of the flow of information to all team members when information is added to the model. Team members exchange information to revise the model with this administrator. The administrator will validate all changes to the LPM. This is to assure proper tracking and control of *revisions*.

This administrator can be one of the design team members such as an *architect, structural engineer of record*, or a separate entity on the design team serving this purpose. The administrator can also be the *steel detailer* or a separate entity on the construction team serving this purpose.

A4.3. Fabricator Responsibility

In addition to the requirements in Section 4.3, the following requirements shall apply:

When the design model is used to develop the manufacturing model the *fabricator* shall accept the information under the following conditions:

(a) When the design information is to be conveyed to the *fabricator* by way of the design model, in the event of a conflict between the model and the *design drawings*, the design model will control.
(b) The ownership of the information added to the LPM in the manufacturing model should be defined in the *contract documents*. In the absence of terms for ownership regarding the information added by the *fabricator* to the LPM in the *contract documents*, the ownership will belong to the *fabricator*.
(c) During the development of the manufacturing model, as member locations are adjusted to convert the modeled parts from a design model, these relocations will only be done with the approval of the *owner's designated representative for design*.
(d) The *fabricator* and *erector* shall accept the use of the LPM and design model under the same conditions as set forth in Section 4.3 with regard to CAD files, except as modified in Section A4.3 above.

A4.4. Approval

In addition to the requirements in Section 4.4, the following requirements shall apply:

When the approval of the detailed material is to be done by the use of the manufacturing model the version of the submitted model shall be identified. The approver shall annotate the manufacturing model with approval comments attached to the individual elements as specified in the CIS/2 standard. As directed by the approval comment the *fabricator* will reissue the manufacturing model for re-review and the version of the model submitted will be tracked as previously defined.

Commentary:
Approval of the manufacturing model by the *owner's designated representative for design* can replace the approval of actual *shop* and *erection drawings*. For this method to be effective, a system must be in place to record review, approval, correction and final release of the manufacturing model for fabrication of *structural steel*. The versions of the model must be tracked, and review comments and approvals permanently attached to the versions of the model to the same extent as such data is maintained with conventional hard copy approvals. The CIS/2 standard provides this level of tracking.

AMERICAN INSTITUTE OF STEEL CONSTRUCTION
One East Wacker Drive, Suite 700, Chicago, Illinois 60601

AISC 303-10 (2M710)

Revision and Errata List—August 2013
AISC Steel Construction Manual, 14th Edition

The following list represents corrections to the Second Printing of the AISC *Steel Construction Manual*, 14th Edition. These corrections are incorporated in the Third Printing.

Page(s)	Item
3-227	Case 42 figure, the reaction under point B should read, $R_B = 1.14wl$.
7-28, 7-29	Revise the note at the bottom of Table 7-5 to read: Note: Edge distance indicated is from the center of the hole or slot to the edge of the element in the line of force. Hole deformation is considered. When hole deformation is not considered, see AISC *Specification* Section J3.10.
16.1-120	In Table J3.2, revise the metric conversion in parentheses of the nominal shear strength in bearing-type connections to 469 MPa, for Group A (e.g., A325) bolts, when threads are excluded from shear planes, and Group B (e.g., A490) bolts, when threads are not excluded from shear planes.
16.1-204	In Table A-3.1, Section 5.6, for "Crack initiating from weld root:", under the column labeled, "Constant C_f," the entry should be "Eqn. A-3-6 or A-3-6M" (not Eqn. A-3-5 or A-3-5M).
16.1-529	Insert the following reference: ASCE (2008), *Standard Calculation Methods for Structural Fire Protection*, ASCE/SEI SFPE 29-08, American Society of Civil Engineers, Reston, VA.

Revision and Errata List—February 2012
AISC Steel Construction Manual, 14th Edition

The following list represents corrections to the First Printing of the AISC *Steel Construction Manual*, 14th Edition. These corrections are incorporated in the Second Printing.

Page(s)	Item
1-34	The HP12×53 should have footnote "c" following the shape designation.
2-50	Replace Table 2-6 with the attached revised Table 2-6. (Revisions are indicated with boxes and include: addition of F2280, added footnote d to A490 and F1852 and revised the shading and applicability for F1554 grades relative to anchor rods.)
3-225	In Case 35, replace the 5th line with the following: $$\Delta_{max}\,(\text{at } x = 0.423l)\ldots\ldots\ldots\ldots\ldots\ldots = 0.0642\frac{Ml^2}{EI}$$
3-225	In the last line of Case 36, insert "(when $x > a$)" following "Δ_x".
4-25, 26, 27	Replace Table 4-2 on these pages with the attached revised Table 4-2 (Insert P4-25, P4-26 and P4-27). See boxed areas for revisions.
6-43	Replace this table with the attached Insert P6-43. See boxed areas for revisions.
6-49	Replace this table with the attached Insert P6-49. See boxed areas for revisions.
6-51	Replace this table with the attached Insert P6-51. See boxed areas for revisions.
10-17	For Group A bolts, with N thread condition and STD holes, the ASD value for 5/16-in. angle thickness should be 165 kips.
15-4	In Equation 15-7, replace V_a with V_n.
16.1-16	In Case 1, the double angle figure should show the *b* dimension to the heel of the angle.
16.1-17	In Case 16, under the heading "Examples", replace the lefthand figure with the following.

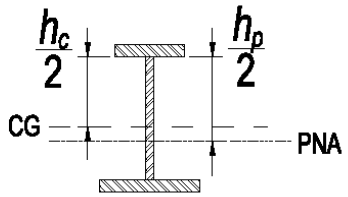

16.1-31 In Section E1, 2nd line, replace $P_n\Omega_c$ with P_n/Ω_c.

16.1-145 Insert "< *B*" following "$(5t_p+l_b)$" at the end of Equation K1-15.

16.1-306 Replace Figure C-F1.4 with the following:

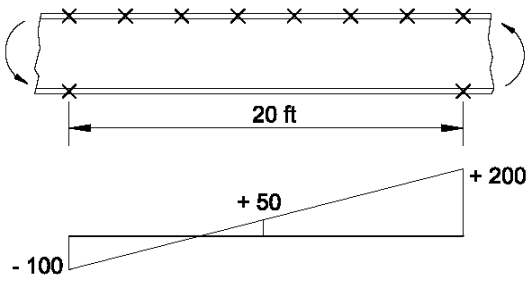

16.1-366 In the 2nd full paragraph, 2nd to last line, replace "use of method 2" with "use of method 1".

16.1-387 In the 6th line, revise "1.5 times the thickness of the material…." to "1.0 times the thickness of the material…."

16.1-388 In Section J1.8, third line, replace "(Kulak and Grondin, 2001)" with "(Kulak and Grondin, 2003)."

16.1-390 The captions under Figure C-J2.1 should read as follows:

(a) Incorrect for t ≥ ¼ *in.* *(b) Correct for* t ≥ ¼ *in.*

16.1-403 In the middle paragraph, end of the last line should read, "…by 0.75/0.90 = 0.833."

16.1-542 Insert the following missing reference following the reference, Kulak and Grondin (2002):

Kulak, G.L. and Grondin, G.Y. (2003), “Strength of Joints that Combine Bolts and Welds,” *Engineering Journal*, AISC, Vol. 40, No. 2, 2nd Quarter, pp. 89–98.

Revised Table 2-6

Table 2-6
Applicable ASTM Specifications for Various Types of Structural Fasteners

ASTM Designation		F_y Min. Yield Stress (ksi)	F_u Tensile Stress[a] (ksi)	Diameter Range (in.)	High-Strength Bolts		Common Bolts	Nuts	Washers	Direct-Tension-Indicator Washers	Threaded Rods	Steel Headed Stud Anchors	Anchor Rods		
					Conventional	Twist-Off-Type Tension-Control							Hooked	Headed	Threaded & Nutted
A108		—	65	0.375 to 0.75, incl.								■			
A325[d]		—	105	over 1 to 1.5, incl.	■										
		—	120	0.5 to 1, incl.	■										
A490[d]		—	150	0.5 to 1.5	■										
F1852[d]		—	105	1.125		■									
		—	120	0.5 to 1. incl.		■									
F2280[d]		—	150	0.5 to 1.125, incl.		■									
A194 Gr. 2H		—	—	0.25 to 4				▒							
A563		—	—	0.25 to 4				■							
F436[b]		—	—	0.25 to 4					■						
F959		—	—	0.5 to 1.5						■					
A36		36	58-80	to 10							■		▒		▒
A193 Gr. B7[e]		—	100	over 4 to 7							▒		▒		▒
		—	115	over 2.5 to 4							▒		▒		▒
		—	125	2.5 and under							▒		▒		▒
A307 Gr. A		—	60	0.25 to 4			■								
A354 Gr. BD		—	140	2.5 to 4, incl.							▒		▒	▒	▒
		—	150	0.25 to 2.5, incl.							▒		▒	▒	▒
A449		—	90	1.75 to 3, incl.	[c]						▒		▒	▒	▒
		—	105	1.125 to 1.5, incl.	[c]						▒		▒	▒	▒
		—	120	0.25 to 1, incl.	[c]						▒		▒	▒	▒
A572	Gr. 42	42	60	to 6							▒		▒		▒
	Gr. 50	50	65	to 4							▒		▒		▒
	Gr. 55	55	70	to 2							▒		▒		▒
	Gr. 60	60	75	to 1.25							▒		▒		▒
	Gr. 65	65	80	to 1.25							▒		▒		▒
A588		42	63	Over 5 to 8, incl.							▒		▒		▒
		46	67	Over 4 to 5, incl.							▒		▒		▒
		50	70	4 and under							▒		▒		▒
A687		105	150 max.	0.625 to 3							▒				
F1554	Gr. 36	36	58-80	0.25 to 4									■	■	■
	Gr. 55	55	75-95	0.25 to 4									■	■	■
	Gr. 105	105	125-150	0.25 to 3									▒	▒	▒

■ = Preferred material specification
▒ = Other applicable material specification, the availability of which should be confirmed prior to specification
□ = Material specification does not apply

— Indicates that a value is not specified in the material specification.
[a] Minimum unless a range is shown or maximum (max.) is indicated.
[b] Special washer requirements may apply per RCSC *Specification* Table 6.1 for some steel-to-steel bolting applications and per Part 14 for anchor-rod applications.
[c] See AISC *Specification* Section J3.1 for limitations on use of ASTM A449 bolts.
[d] When atmospheric corrosion resistance is desired, Type 3 can be specified.
[e] For anchor rods with temperature and corrosion resistance characteristics.

Insert P4-25

Table 4-2 (continued)
Available Strength in Axial Compression, kips
HP-Shapes

F_y = 50 ksi

HP16

Shape		HP16×											
lb/ft		183		162		141		121		101		88[c]	
Design		P_n/Ω_c	$\phi_c P_n$	P_n/Ω_c	$\phi_c P_n$	P_n/Ω_c	$\phi_c P_n$	P_n/Ω_c	$\phi_c P_n$	P_n/Ω_c	$\phi_c P_n$	P_n/Ω_c	$\phi_c P_n$
		ASD	LRFD	ASD	LRFD	ASD	LRFD	ASD	LRFD	ASD	LRFD	ASD	LRFD
Effective length, KL (ft), with respect to least radius of gyration, r_y	0	1610	2430	1430	2150	1250	1880	1070	1610	895	1350	749	1130
	6	1570	2360	1390	2090	1220	1830	1040	1570	871	1310	729	1100
	7	1560	2340	1380	2070	1200	1810	1030	1550	862	1300	722	1080
	8	1540	2320	1360	2050	1190	1790	1020	1540	852	1280	714	1070
	9	1520	2290	1350	2020	1180	1770	1010	1520	841	1260	705	1060
	10	1500	2260	1330	2000	1160	1740	995	1490	829	1250	694	1040
	11	1480	2230	1310	1970	1140	1720	979	1470	816	1230	684	1030
	12	1460	2190	1290	1930	1120	1690	962	1450	802	1210	672	1010
	13	1430	2150	1260	1900	1100	1660	944	1420	787	1180	659	991
	14	1410	2110	1240	1860	1080	1630	926	1390	771	1160	646	971
	15	1380	2070	1210	1820	1060	1590	906	1360	754	1130	632	950
	16	1350	2020	1190	1780	1030	1560	885	1330	736	1110	617	928
	17	1320	1980	1160	1740	1010	1520	863	1300	718	1080	602	905
	18	1280	1930	1130	1700	985	1480	841	1260	699	1050	587	882
	19	1250	1880	1100	1650	958	1440	818	1230	679	1020	570	857
	20	1220	1830	1070	1610	931	1400	794	1190	659	991	554	833
	22	1150	1720	1010	1510	876	1320	746	1120	618	929	520	782
	24	1070	1610	942	1420	819	1230	696	1050	576	866	485	729
	26	1000	1500	877	1320	761	1140	646	971	534	802	450	676
	28	927	1390	811	1220	703	1060	596	896	491	739	415	623
	30	854	1280	746	1120	645	970	546	821	450	676	380	571
	32	783	1180	682	1030	589	886	498	748	409	615	346	520
	34	713	1070	620	932	535	804	451	678	370	556	313	471
	36	646	971	561	843	482	725	405	609	331	498	281	423
	38	581	873	503	756	433	651	364	547	297	447	253	380
	40	524	787	454	682	391	587	328	494	268	404	228	343
Properties													
P_{wo}, kips		435	653	363	545	300	451	241	362	189	283	155	232
P_{wi}, kips/in.		37.7	56.5	33.3	50.0	29.2	43.8	25.0	37.5	20.8	31.3	18.0	27.0
P_{wb}, kips		2100	3160	1450	2190	974	1460	612	920	356	535	229	345
P_{fb}, kips		239	359	187	281	143	215	105	158	73.1	110	54.6	82.0
L_p, ft		13.6		13.5		13.4		16.7		20.2		22.9	
L_r, ft		67.6		60.2		54.5		48.6		43.6		40.6	
A_g, in.^{2}		53.9		47.7		41.7		35.8		29.9		25.8	
I_x, in.^{4}		2490		2190		1870		1590		1300		1110	
I_y, in.^{4}		803		697		599		504		412		349	
r_y, in.		3.86		3.82		3.79		3.75		3.71		3.68	
r_x/r_y		1.76		1.77		1.77		1.78		1.78		1.78	
$P_{ex}(KL)^2/10^4$, k-in.^{2}		71300		62700		53500		45500		37200		31800	
$P_{ey}(KL)^2/10^4$, k-in.^{2}		23000		19900		17100		14400		11800		9990	

ASD	LRFD
$\Omega_c = 1.67$	$\phi_c = 0.90$

[c] Shape is slender for compression with F_y = 50 ksi.

HP14-HP12

Table 4-2 (continued)
Available Strength in Axial Compression, kips
HP-Shapes

F_y = 50 ksi

Shape		HP14×								HP12×			
lb/ft		117		102		89		73[c]		84		74	
Design		P_n/Ω_c	$\phi_c P_n$	P_n/Ω_c	$\phi_c P_n$	P_n/Ω_c	$\phi_c P_n$	P_n/Ω_c	$\phi_c P_n$	P_n/Ω_c	$\phi_c P_n$	P_n/Ω_c	$\phi_c P_n$
		ASD	LRFD	ASD	LRFD	ASD	LRFD	ASD	LRFD	ASD	LRFD	ASD	LRFD
Effective length, KL (ft), with respect to least radius of gyration, r_y	0	1030	1550	901	1350	781	1170	623	937	737	1110	653	981
	6	1000	1500	875	1310	758	1140	605	909	705	1060	624	938
	7	990	1490	865	1300	750	1130	598	899	694	1040	614	923
	8	977	1470	855	1280	740	1110	590	887	681	1020	603	906
	9	964	1450	843	1270	730	1100	582	875	667	1000	591	888
	10	949	1430	829	1250	718	1080	573	861	652	980	577	867
	11	933	1400	815	1220	705	1060	563	846	636	955	562	845
	12	916	1380	800	1200	692	1040	552	830	618	929	546	821
	13	897	1350	783	1180	677	1020	541	813	599	901	530	796
	14	878	1320	766	1150	662	995	528	794	580	872	512	770
	15	857	1290	748	1120	646	971	516	775	560	842	494	743
	16	836	1260	729	1100	629	946	502	755	539	810	476	715
	17	813	1220	709	1070	612	920	489	735	518	779	457	687
	18	790	1190	689	1030	594	893	475	713	496	746	437	658
	19	767	1150	668	1000	576	866	460	691	474	713	418	628
	20	743	1120	646	972	557	838	445	669	452	680	398	599
	22	694	1040	603	906	519	780	415	623	408	614	359	540
	24	643	967	558	839	480	722	384	577	365	549	320	482
	26	593	891	514	772	441	663	353	531	323	486	283	426
	28	543	816	470	706	403	606	322	484	283	425	247	372
	30	494	742	427	641	365	549	292	439	247	371	216	324
	32	446	671	385	579	329	494	263	396	217	326	189	285
	34	400	602	344	518	294	441	235	354	192	289	168	252
	36	357	537	307	462	262	394	210	316	171	257	150	225
	38	320	482	276	414	235	353	188	283	154	231	134	202
	40	289	435	249	374	212	319	170	256	139	208	121	182
Properties													
P_{wo}, kips		201	302	162	243	134	201	100	150	158	236	132	198
P_{wi}, kips/in.		26.8	40.3	23.5	35.3	20.5	30.8	16.8	25.3	22.8	34.3	20.2	30.3
P_{wb}, kips		790	1190	531	798	354	532	195	294	572	859	393	591
P_{fb}, kips		121	182	93.0	140	70.8	106	47.7	71.7	87.8	132	69.6	105
L_p, ft		12.9		15.6		17.8		21.2		10.4		11.9	
L_r, ft		50.5		45.7		41.7		37.6		41.3		37.9	
A_g, in.^{2}		34.4		30.1		26.1		21.4		24.6		21.8	
I_x, in.^{4}		1220		1050		904		729		650		569	
I_y, in.^{4}		443		380		326		261		213		186	
r_y, in.		3.59		3.56		3.53		3.49		2.94		2.92	
r_x/r_y		1.66		1.66		1.67		1.67		1.75		1.75	
$P_{ex}(KL)^2/10^4$, k-in.^{2}		34900		30100		25900		20900		18600		16300	
$P_{ey}(KL)^2/10^4$, k-in.^{2}		12700		10900		9330		7470		6100		5320	

ASD	LRFD
$\Omega_c = 1.67$	$\phi_c = 0.90$

[c] Shape is slender for compression with F_y = 50 ksi.

Insert P4-27

Table 4-2 (continued)
Available Strength in Axial Compression, kips
HP-Shapes

F_y = 50 ksi

HP12-HP8

Shape		HP12×				HP10×				HP8×	
lb/ft		63		53[c]		57		42		36	
Design		P_n/Ω_c ASD	$\phi_c P_n$ LRFD	P_n/Ω_c ASD	$\phi_c P_n$ LRFD	P_n/Ω_c ASD	$\phi_c P_n$ LRFD	P_n/Ω_c ASD	$\phi_c P_n$ LRFD	P_n/Ω_c ASD	$\phi_c P_n$ LRFD
Effective length, KL (ft), with respect to least radius of gyration, r_y	0	551	828	460	691	500	751	371	558	317	477
	6	526	791	439	660	469	706	348	523	287	432
	7	518	778	432	649	459	690	340	511	277	416
	8	508	763	424	637	447	672	331	497	266	400
	9	497	747	415	623	434	652	321	482	254	381
	10	485	729	405	608	420	631	310	465	241	362
	11	472	710	394	592	404	608	298	448	227	341
	12	459	690	383	575	388	584	286	430	213	320
	13	445	668	371	557	372	559	273	411	199	299
	14	430	646	358	538	355	533	260	391	184	277
	15	414	622	345	519	337	506	247	371	170	256
	16	398	598	332	499	319	480	233	351	156	235
	17	382	574	318	478	301	453	220	330	143	214
	18	365	549	304	457	283	426	206	310	129	194
	19	348	524	290	436	265	399	193	290	117	175
	20	332	498	276	415	248	373	180	270	105	158
	22	298	448	248	373	214	322	154	232	86.9	131
	24	265	399	221	332	182	273	131	196	73.0	110
	26	234	351	194	292	155	233	111	167	62.2	93.5
	28	203	305	169	254	133	201	95.9	144	53.7	80.7
	30	177	266	147	221	116	175	83.5	126	46.7	70.3
	32	156	234	129	194	102	154	73.4	110	41.1	61.8
	34	138	207	114	172	90.5	136	65.0	97.7		
	36	123	185	102	153	80.7	121	58.0	87.2		
	38	110	166	91.6	138	72.5	109	52.1	78.2		
	40	99.6	150	82.7	124	65.4	98.3	47.0	70.6		
Properties											
P_{wo}, kips		107	161	81.9	123	118	177	78.2	117	83.8	126
P_{wi}, kips/in.		17.2	25.8	14.5	21.8	18.8	28.3	13.8	20.8	14.8	22.3
P_{wb}, kips		243	365	147	221	397	597	158	237	241	363
P_{fb}, kips		49.6	74.6	35.4	53.2	59.7	89.8	33.0	49.6	37.1	55.7
L_p, ft		14.4		16.6		8.65		12.3		6.90	
L_r, ft		34.0		31.1		34.8		28.3		27.3	
A_g, in.^{2}		18.4		15.5		16.7		12.4		10.6	
I_x, in.^{4}		472		393		294		210		119	
I_y, in.^{4}		153		127		101		71.7		40.3	
r_y, in.		2.88		2.86		2.45		2.41		1.95	
r_x/r_y		1.76		1.76		1.71		1.71		1.72	
$P_{ex}(KL)^2/10^4$, k-in.^{2}		13500		11200		8410		6010		3410	
$P_{ey}(KL)^2/10^4$, k-in.^{2}		4380		3630		2890		2050		1150	

ASD	LRFD
$\Omega_c = 1.67$	$\phi_c = 0.90$

[c] Shape is slender for compression with F_y = 50 ksi.
Note: Heavy line indicates KL/r_y equal to or greater than 200.

Insert P6-43

F_y = 50 ksi

Table 6-1 (continued)
Combined Flexure and Axial Force
W-Shapes

W24

Shape		W24×											
		103[c]				94[c]				84[c]			
Design		$p \times 10^3$ (kips)$^{-1}$		$b_x \times 10^3$ (kip-ft)$^{-1}$		$p \times 10^3$ (kips)$^{-1}$		$b_x \times 10^3$ (kip-ft)$^{-1}$		$p \times 10^3$ (kips)$^{-1}$		$b_x \times 10^3$ (kip-ft)$^{-1}$	
		ASD	LRFD	ASD	LRFD	ASD	LRFD	ASD	LRFD	ASD	LRFD	ASD	LRFD
Effective length, KL (ft), with respect to least radius of gyration, r_y, or Unbraced Length, L_b (ft), for X-X axis bending	0	1.13	0.753	1.27	0.847	1.26	0.840	1.40	0.933	1.46	0.968	1.59	1.06
	11	1.52	1.01	1.42	0.944	1.67	1.11	1.57	1.05	1.92	1.28	1.80	1.20
	12	1.62	1.08	1.46	0.972	1.78	1.18	1.62	1.08	2.03	1.35	1.87	1.24
	13	1.73	1.15	1.51	1.00	1.90	1.26	1.68	1.12	2.17	1.44	1.93	1.28
	14	1.86	1.23	1.55	1.03	2.04	1.36	1.73	1.15	2.33	1.55	2.00	1.33
	15	2.00	1.33	1.61	1.07	2.21	1.47	1.79	1.19	2.52	1.68	2.08	1.38
	16	2.18	1.45	1.66	1.10	2.40	1.60	1.86	1.24	2.75	1.83	2.16	1.44
	17	2.38	1.58	1.72	1.14	2.62	1.74	1.93	1.28	3.01	2.00	2.25	1.49
	18	2.61	1.74	1.78	1.19	2.88	1.92	2.01	1.33	3.32	2.21	2.34	1.56
	19	2.88	1.92	1.85	1.23	3.18	2.12	2.09	1.39	3.68	2.45	2.45	1.63
	20	3.19	2.12	1.92	1.28	3.53	2.35	2.17	1.45	4.08	2.71	2.56	1.70
	22	3.86	2.57	2.09	1.39	4.27	2.84	2.43	1.61	4.94	3.28	2.95	1.96
	24	4.60	3.06	2.37	1.58	5.08	3.38	2.76	1.84	5.88	3.91	3.37	2.24
	26	5.40	3.59	2.65	1.77	5.96	3.97	3.10	2.06	6.90	4.59	3.80	2.53
	28	6.26	4.16	2.94	1.95	6.92	4.60	3.44	2.29	8.00	5.32	4.24	2.82
	30	7.19	4.78	3.22	2.14	7.94	5.28	3.79	2.52	9.18	6.11	4.67	3.11
	32	8.18	5.44	3.50	2.33	9.03	6.01	4.13	2.75	10.4	6.95	5.11	3.40
Other Constants and Properties													
$b_y \times 10^3$, (kip-ft)$^{-1}$		8.58		5.71		9.50		6.32		10.9		7.27	
$t_y \times 10^3$, (kips)$^{-1}$		1.10		0.733		1.21		0.802		1.35		0.900	
$t_r \times 10^3$, (kips)$^{-1}$		1.35		0.903		1.48		0.987		1.66		1.11	
r_x/r_y		5.03				4.98				5.02			
r_y, in.		1.99				1.98				1.95			

[c] Shape is slender for compression with F_y = 50 ksi.

Note: Heavy line indicates KL/r_y equal to or greater than 200.

Insert P6-49

F_y = 50 ksi

Table 6-1 (continued)
Combined Flexure and Axial Force
W-Shapes

W21

Shape		W21×											
		68[c]				62[c]				57[c]			
Design		$p \times 10^3$ (kips)$^{-1}$		$b_x \times 10^3$ (kip-ft)$^{-1}$		$p \times 10^3$ (kips)$^{-1}$		$b_x \times 10^3$ (kip-ft)$^{-1}$		$p \times 10^3$ (kips)$^{-1}$		$b_x \times 10^3$ (kip-ft)$^{-1}$	
		ASD	LRFD	ASD	LRFD	ASD	LRFD	ASD	LRFD	ASD	LRFD	ASD	LRFD
Effective length, KL (ft), with respect to least radius of gyration, r_y, or Unbraced Length, L_b (ft), for X-X axis bending	0	1.77	1.18	2.23	1.48	1.98	1.31	2.47	1.65	2.18	1.45	2.76	1.84
	6	1.95	1.30	2.23	1.48	2.18	1.45	2.47	1.65	2.56	1.71	2.91	1.94
	7	2.02	1.34	2.27	1.51	2.26	1.50	2.54	1.69	2.73	1.82	3.04	2.03
	8	2.10	1.40	2.35	1.56	2.35	1.56	2.62	1.74	2.94	1.96	3.19	2.12
	9	2.21	1.47	2.43	1.62	2.47	1.64	2.71	1.81	3.21	2.14	3.35	2.23
	10	2.33	1.55	2.51	1.67	2.61	1.74	2.81	1.87	3.56	2.37	3.53	2.35
	11	2.48	1.65	2.61	1.73	2.78	1.85	2.92	1.94	4.02	2.68	3.73	2.48
	12	2.67	1.77	2.70	1.80	2.98	1.98	3.04	2.02	4.60	3.06	3.95	2.63
	13	2.89	1.92	2.81	1.87	3.22	2.14	3.16	2.10	5.32	3.54	4.20	2.79
	14	3.16	2.10	2.93	1.95	3.53	2.35	3.30	2.19	6.17	4.10	4.48	2.98
	15	3.47	2.31	3.05	2.03	3.89	2.59	3.44	2.29	7.08	4.71	4.94	3.29
	16	3.84	2.55	3.19	2.12	4.31	2.87	3.61	2.40	8.06	5.36	5.47	3.64
	17	4.27	2.84	3.34	2.22	4.83	3.21	3.78	2.52	9.10	6.05	6.01	4.00
	18	4.79	3.19	3.50	2.33	5.41	3.60	3.98	2.65	10.2	6.79	6.55	4.36
	19	5.34	3.55	3.72	2.48	6.03	4.01	4.33	2.88	11.4	7.56	7.10	4.72
	20	5.91	3.93	4.03	2.68	6.68	4.45	4.70	3.13	12.6	8.38	7.65	5.09
	22	7.16	4.76	4.66	3.10	8.09	5.38	5.46	3.63	15.2	10.1	8.76	5.83
	24	8.52	5.67	5.31	3.53	9.63	6.40	6.24	4.15				
	26	9.99	6.65	5.95	3.96	11.3	7.52	7.02	4.67				
	28	11.6	7.71	6.60	4.39	13.1	8.72	7.81	5.20				
	30	13.3	8.85	7.26	4.83								
Other Constants and Properties													
$b_y \times 10^3$, (kip-ft)$^{-1}$		14.6		9.71		16.4		10.9		24.1		16.0	
$t_y \times 10^3$, (kips)$^{-1}$		1.67		1.11		1.83		1.21		2.00		1.33	
$t_r \times 10^3$, (kips)$^{-1}$		2.05		1.37		2.24		1.49		2.46		1.64	
r_x/r_y		4.78				4.82				6.19			
r_y, in.		1.80				1.77				1.35			

[c] Shape is slender for compression with F_y = 50 ksi.

Note: Heavy line indicates KL/r_y equal to or greater than 200.

F_y = 50 ksi

Table 6-1 (continued)
Combined Flexure and Axial Force
W-Shapes

W21-W18

Shape		W21×				W18×							
		44[c]				311[h]				283[h]			
Design		$p \times 10^3$ (kips)$^{-1}$		$b_x \times 10^3$ (kip-ft)$^{-1}$		$p \times 10^3$ (kips)$^{-1}$		$b_x \times 10^3$ (kip-ft)$^{-1}$		$p \times 10^3$ (kips)$^{-1}$		$b_x \times 10^3$ (kip-ft)$^{-1}$	
		ASD	LRFD	ASD	LRFD	ASD	LRFD	ASD	LRFD	ASD	LRFD	ASD	LRFD
Effective length, KL (ft), with respect to least radius of gyration, r_y, or Unbraced Length, L_b (ft), for X-X axis bending	0	2.97	1.98	3.73	2.48	0.365	0.243	0.473	0.314	0.401	0.267	0.527	0.351
	6	3.53	2.35	4.03	2.68	0.381	0.253	0.473	0.314	0.419	0.279	0.527	0.351
	7	3.78	2.51	4.24	2.82	0.387	0.257	0.473	0.314	0.426	0.284	0.527	0.351
	8	4.09	2.72	4.48	2.98	0.394	0.262	0.473	0.314	0.434	0.289	0.527	0.351
	9	4.50	3.00	4.75	3.16	0.402	0.268	0.473	0.314	0.443	0.295	0.527	0.351
	10	5.03	3.35	5.05	3.36	0.412	0.274	0.473	0.314	0.454	0.302	0.527	0.351
	11	5.74	3.82	5.39	3.59	0.422	0.281	0.474	0.315	0.466	0.310	0.530	0.352
	12	6.68	4.45	5.79	3.85	0.434	0.289	0.477	0.317	0.480	0.319	0.533	0.355
	13	7.84	5.22	6.25	4.16	0.447	0.298	0.480	0.319	0.495	0.329	0.537	0.357
	14	9.10	6.05	7.11	4.73	0.462	0.308	0.483	0.321	0.512	0.340	0.540	0.359
	15	10.4	6.95	7.99	5.32	0.479	0.319	0.486	0.323	0.530	0.353	0.544	0.362
	16	11.9	7.91	8.90	5.92	0.497	0.331	0.489	0.325	0.551	0.367	0.548	0.364
	17	13.4	8.93	9.83	6.54	0.517	0.344	0.492	0.327	0.574	0.382	0.551	0.367
	18	15.0	10.0	10.8	7.18	0.540	0.359	0.495	0.329	0.600	0.399	0.555	0.369
	19	16.8	11.1	11.8	7.82	0.564	0.375	0.498	0.331	0.628	0.418	0.559	0.372
	20	18.6	12.4	12.7	8.47	0.592	0.394	0.501	0.333	0.659	0.439	0.563	0.374
	22					0.655	0.436	0.507	0.338	0.732	0.487	0.571	0.380
	24					0.732	0.487	0.514	0.342	0.821	0.546	0.579	0.385
	26					0.826	0.550	0.521	0.347	0.929	0.618	0.588	0.391
	28					0.942	0.627	0.528	0.351	1.06	0.708	0.596	0.397
	30					1.08	0.720	0.535	0.356	1.22	0.813	0.605	0.403
	32					1.23	0.819	0.542	0.361	1.39	0.925	0.614	0.409
	34					1.39	0.924	0.550	0.366	1.57	1.04	0.624	0.415
	36					1.56	1.04	0.557	0.371	1.76	1.17	0.634	0.422
	38					1.74	1.15	0.565	0.376	1.96	1.30	0.644	0.428
	40					1.92	1.28	0.573	0.382	2.17	1.45	0.654	0.435
Other Constants and Properties													
$b_y \times 10^3$, (kip-ft)$^{-1}$		35.0		23.3		1.72		1.15		1.93		1.28	
$t_y \times 10^3$, (kips)$^{-1}$		2.57		1.71		0.365		0.243		0.401		0.267	
$t_r \times 10^3$, (kips)$^{-1}$		3.16		2.10		0.448		0.299		0.493		0.328	
r_x/r_y		6.40				2.96				2.96			
r_y, in.		1.26				2.95				2.91			

[c] Shape is slender for compression with F_y = 50 ksi.

[h] Flange thickness greater than 2 in. Special requirements may apply per AISC *Specification* Section A3.1c.

Note: Heavy line indicates KL/r_y equal to or greater than 200.